Protected by AR

ACURA

# RDX

# Service Manual 2007

Protected by AR

# General Information

Chassis and Paint Codes ..... 1-2

Identification Number Locations ..... 1-3

Danger/Warning/Caution Label Locations .... 1-4

Under-hood Emission Control Label ..... 1-6

Lift and Support Points ..... 1-7

Towing ..... 1-8

Parts Marking ..... 1-9

Precautions for Super Handling
All Wheel Drive (SH-AWD) System ..... 1-10

Protected by AR



## Chassis and Paint Codes

### Vehicle Identification Number

5J8 TB1 8 2 * 7 A 000001

a b c d e f g h

a. **Manufacturer, Make and Type of Vehicle**
   5J8: Honda of America Mfg., Inc., USA
   Acura Multipurpose passenger vehicle
b. **Line, Body and Engine Type**
   TB1: Acura RDX/K23A1
c. **Body Type and Transmission Type**
   8: 5-door/5-speed Automatic
d. **Vehicle Grade (Series)**
   2: RDX
   5: RDX with Technology Package
e. **Check Digit**
f. **Model Year**
   7: '07
g. **Factory Code**
   A:Marysville, Ohio Factory in USA
h. **Serial Number**
   000001—: USA models
   800001—: Canada models

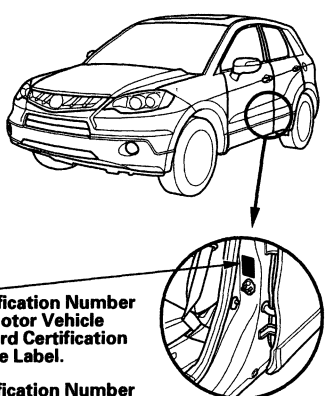

**Vehicle Identification Number and Federal Motor Vehicle Safety Standard Certification and Paint Code Label.**

**Vehicle Identification Number and Canadian Motor Vehicle Safety Standard Certification and Paint Code Label.**

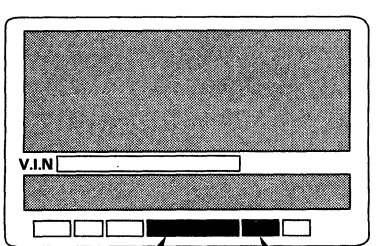


### Engine Number

K23A1 - 1000001

a b

a. **Engine Type**
   K23A1: 2.3 L DOHC i-VTEC Sequential Multiport Fuel-injected engine with turbo charger, inter cooler
b. **Serial Number**

### Transmission Number

BWEA - 9000001

a b

a. **Transmission Type**
   BWEA: 5-speed Automatic
b. **Serial Number**

### Paint Code

| Code | Color |
|---|---|
| NH-603P | White Diamond Pearl |
| NH-658P | Graphite Pearl |
| NH-700M | Alabaster Silver Metallic |
| B-92P | Nighthawk Black Pearl |
| B-536P | Royal Blue Pearl |
| R-528P | Moroccan Red Pearl |
| YR-562P | Carbon Bronze Pearl |



BACK

Protected by AR

## Identification Number Locations

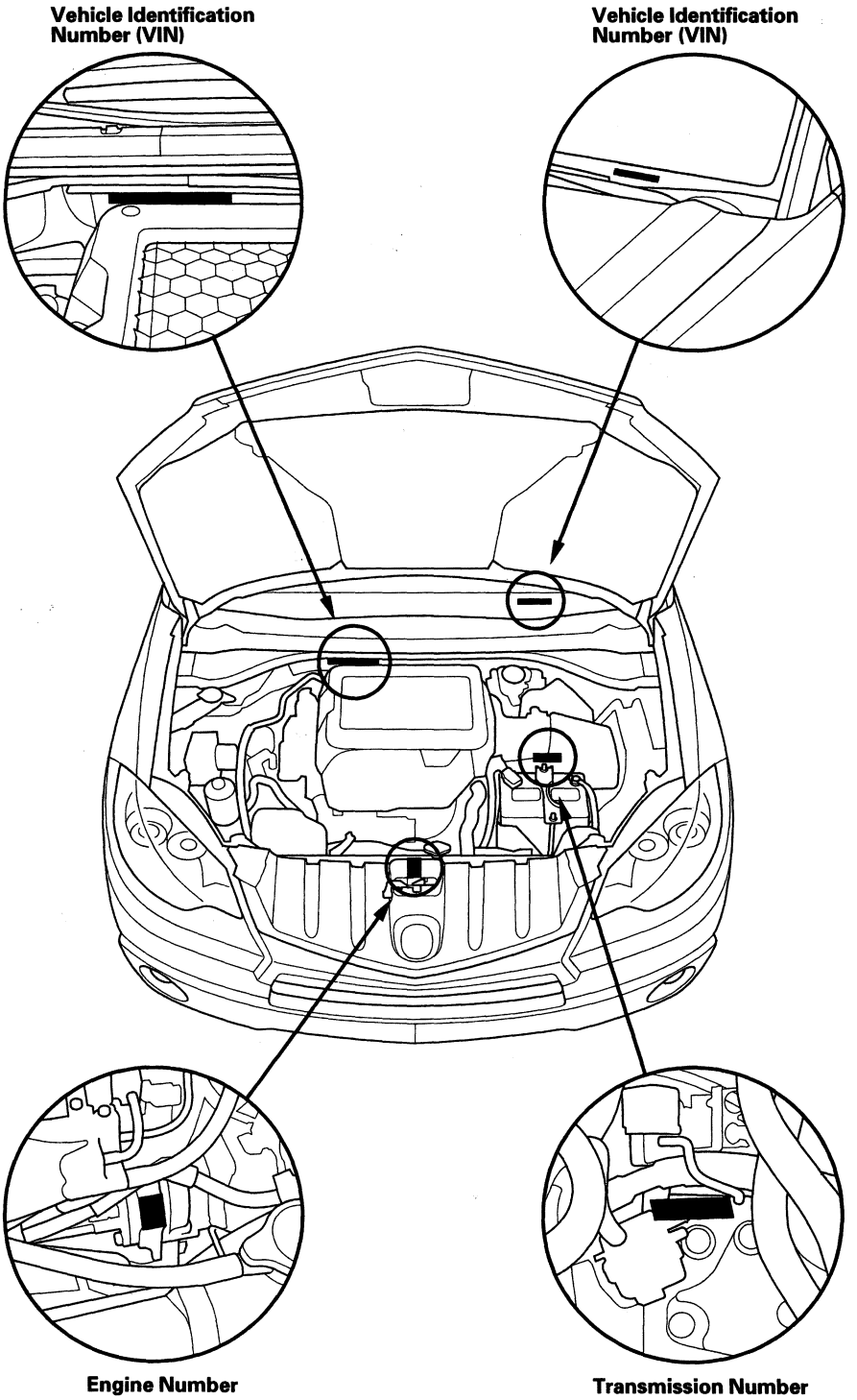

Protected by AR



## Danger/Warning/Caution Label Locations

NOTE: FRONT PASSENGER (CHILD SEAT) AIRBAG WARNING TAG is installed on the glove box in the USA models.

**Front Passenger's Compartment:**

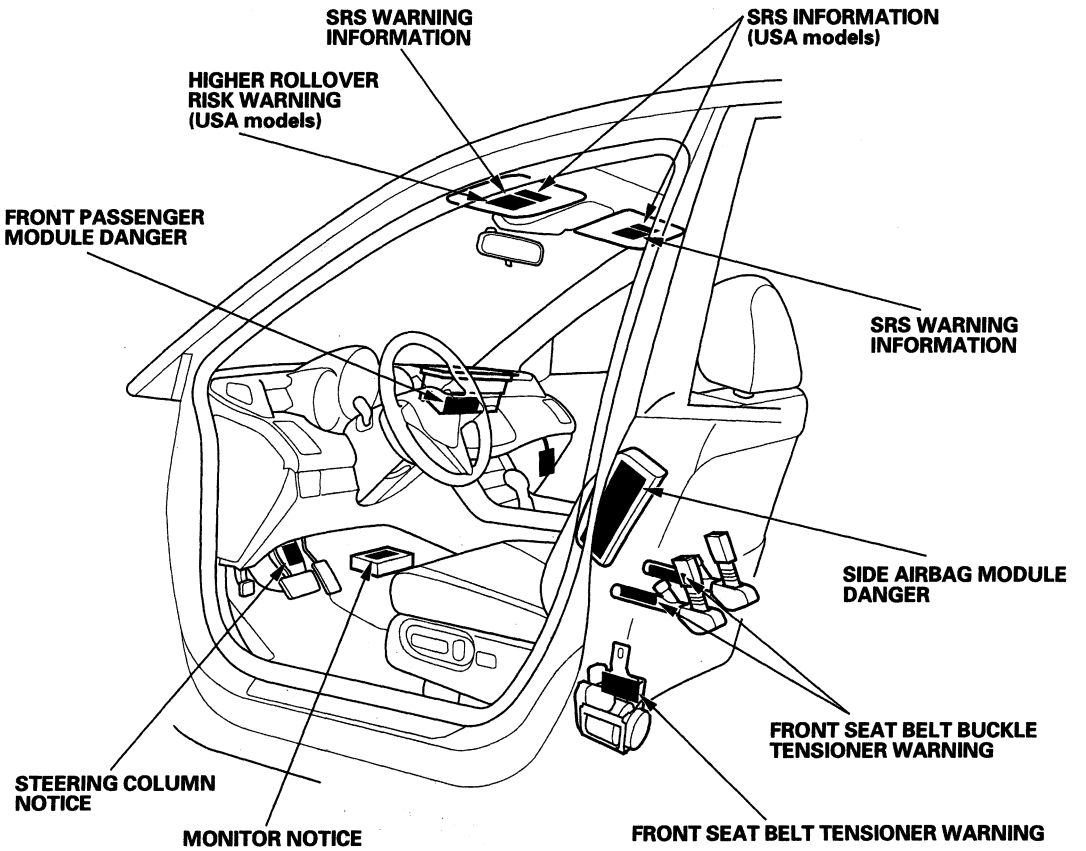


**Steering Wheel:**

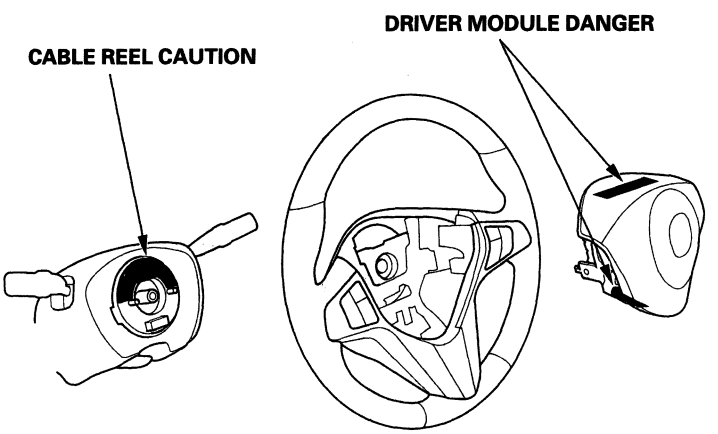


**Rear Passenger's Compartment:**

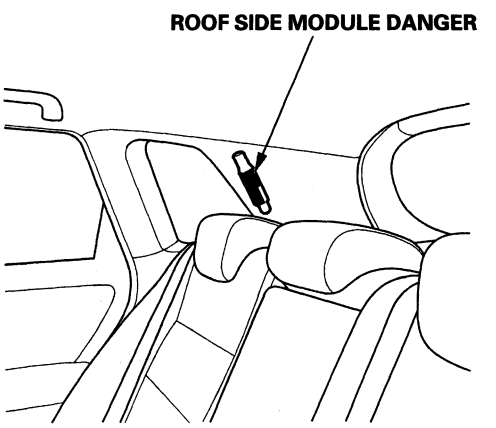




BACK

Protected by AR

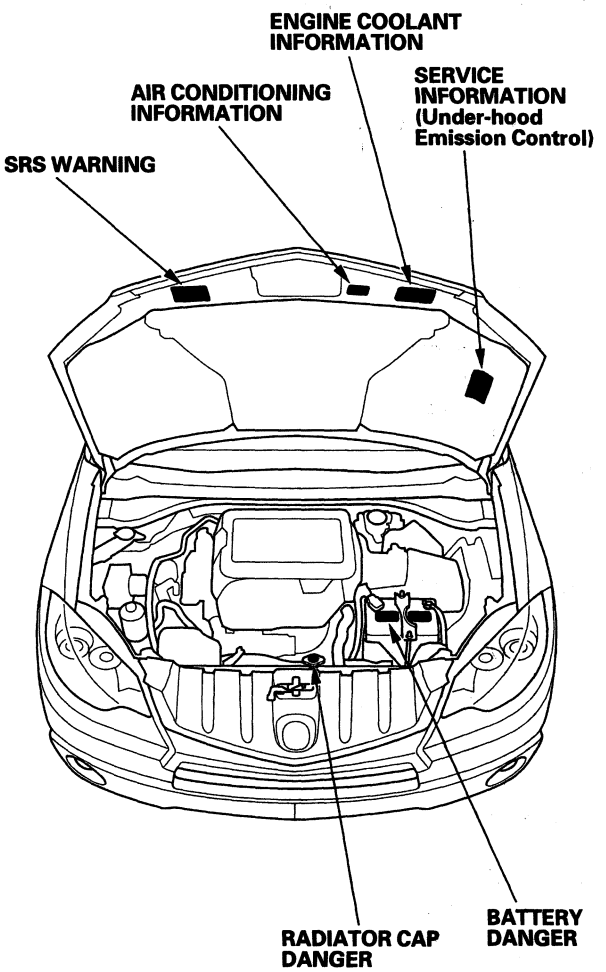


**Doorjamb:**

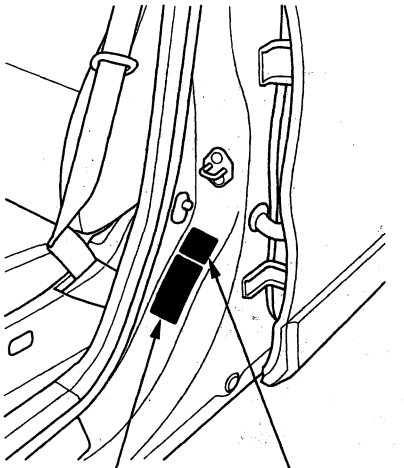

**SIDE AIRBAG CAUTION**
Located on driver's and passenger's doorjamb

**TIRE INFORMATION**
Located on driver's doorjamb

BACK

Protected by AR



## Under-hood Emission Control Label

### Emission Group Identification

**Example:**

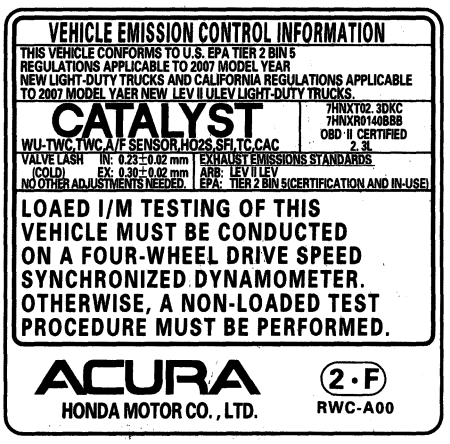


**FEDERAL and CANADA**
THIS VEHICLE CONFORMS TO U.S. EPA TIER 2 BIN 5 REGULATIONS APPLICABLE TO 2007 MODEL YEAR NEW LIGHT-DUTY TRUCKS AND CALIFORNIA REGULATIONS APPLICABLE TO 2007 MODEL YEAR NEW LEV II ULEV LIGHT-DUTY TRUCKS.

### Test Group and Evaporative Family

**Test Group:**

**7 HNX T 02.3 DKC**
**a b c d e**

a. **Model Year**
   7: '07
b. **Manufacturer Subcode**
   HNX: Honda
c. **Family Type**
   T: LDT
d. **Displacement Group**
e. **Sequence Characters**

**Evaporative Family:**

**7 HNX R 0140 BBB**
**a b c d e**

a. **Model Year**
   7: '07
b. **Manufacturer Subcode**
   HNX: Honda
c. **Family Type**
   R: Refueling
d. **Canister Work Capacity**
e. **Sequence Characters**



BACK

Protected by AR

# Lift and Support Points

NOTE: If you are going to remove heavy components such as suspension or the fuel tank from the rear of the vehicle, first support the front of the vehicle with tall safety stands. When substantial weight is removed from the rear of the vehicle, the center of gravity can change, causing the vehicle to tip forward on the lift.

## Vehicle Lift

1. Position the lift blocks (A) under the vehicle's front support points (B) and rear support points (C).

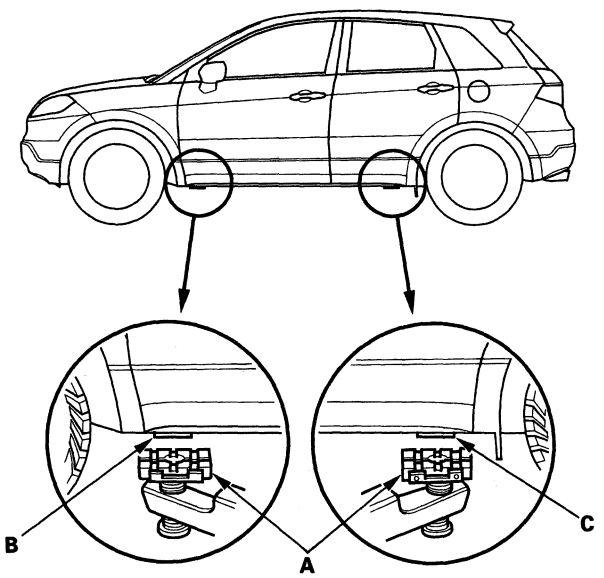


2. Raise the lift a few inches, and rock the vehicle gently to be sure it is firmly supported.

3. Raise the lift to its full height, and inspect the vehicle support points for solid contact with the lift blocks.

## Safety Stands

To support the vehicle on safety stands, use the same support points (B and C) as for a vehicle lift. Always use safety stands when working on or under any vehicle that is supported only by a jack.

## Floor Jack

1. When lifting the front of the vehicle, set the parking brake. When lifting the rear of the vehicle, put the shift lever in the P position.

2. Block the wheels that are not being lifted.

3. Position the floor jack under the front jacking bracket (A) or the rear jacking bracket (B). Center the jacking bracket on the jack lift platform (C), and jack up the vehicle high enough to fit the safety stands under it.

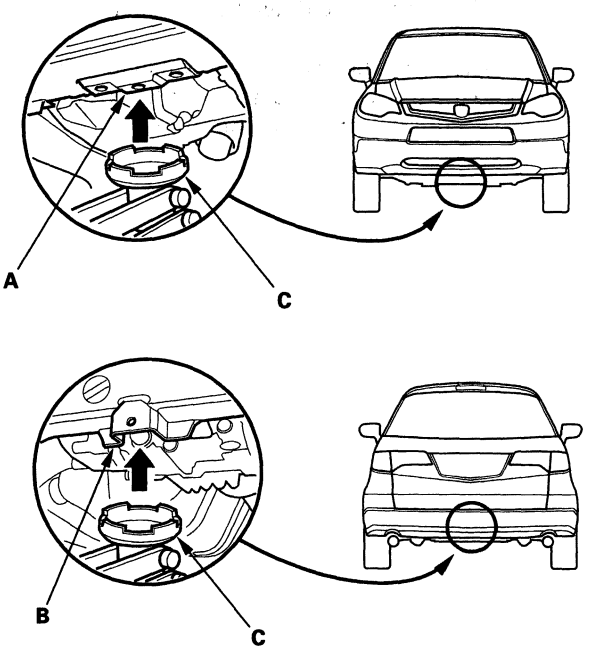


4. Position the safety stands under the support points and adjust them so the vehicle is level.

5. Lower the vehicle onto the stands.

BACK

Protected by AR



## Towing

If the vehicle needs to be towed, call a professional towing service. Never tow the vehicle behind another vehicle with a rope or chain. It is very dangerous.

**Emergency Towing**
There are three popular methods of towing a vehicle.

**Flat-bed Equipment** — The operator loads the vehicle on the back of a truck. **This is the only way of transporting the vehicle.**

To accommodate flat-bed equipment, the vehicle is equipped with front towing hooks (A), front towing hook slots (B), and rear tie down hook slots (C).

The towing hook can be used with a winch to pull the vehicle onto the truck, and the tie down hook slots can be used to secure the vehicle to the truck.

**Front:**

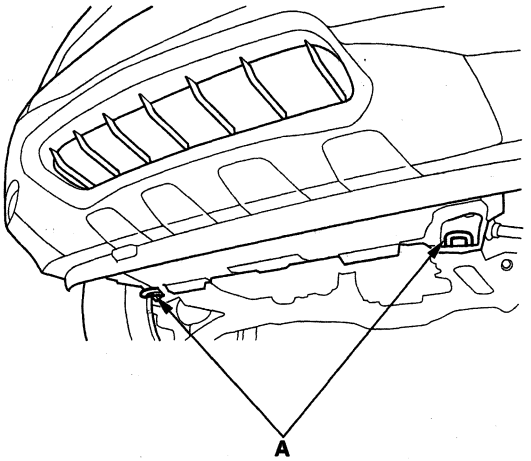


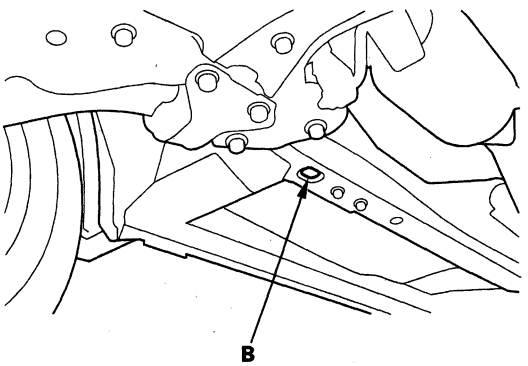


**Rear:**

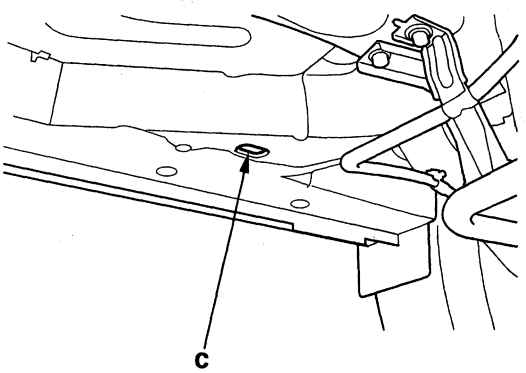




BACK

Protected by AR

**Wheel Lift Equipment** — The tow truck uses two pivoting arms that go under the tires (front and rear) and lift them off the ground. The other two wheels remain on the ground. **Never tow the vehicle with wheel lift equipment.**

**Sling-type Equipment** — The tow truck uses metal cables with hooks on the ends. These hooks go around parts of the frame or suspension, and the cables lift that end of the vehicle off the ground. The vehicle's suspension and body can be seriously damaged if this method of towing is attempted. **This method of towing the vehicle is unacceptable.**

The only recommended way of towing the vehicle is on a flat-bed truck.

**NOTICE**

- Towing the vehicle with only two wheels on the ground will damage parts of the SH-AWD system. If the vehicle is damaged, it should be transported on a flat-bed truck or trailer.
- Trying to lift or tow the vehicle by the bumpers will cause serious damage. The bumpers are not designed to support the vehicle's weight.

## Parts Marking

To deter vehicle theft, certain major components are marked with the vehicle identification number (VIN). Original parts have self-adhesive labels. Replacement body parts have generic self-adhesive labels. These labels should not be removed. The original engine or transmission VIN plates are not transferable to the replacement engine or transmission.

NOTE: Be careful not to damage the parts marking labels during body repair. Mask the labels before repairing the part.

Protected by AR



## Precautions for Super Handling All Wheel Drive (SH-AWD) System

This vehicle is equipped with the Super Handling All Wheel Drive (SH-AWD) system. The SH-AWD system distributes driving torque between the front and rear wheels when accelerating and when wheel spin occurs.

The SH-AWD system does not have a manual switch to disable the AWD system. Whenever service work requires spinning the front or rear wheels with the engine, always lift up and support the vehicle so all four wheels are off the ground.



BACK

Protected by AR



# Specifications

## Standards and Service Limits

Engine Electrical ..... 2-2
Engine Assembly ..... 2-2
Cylinder Head ..... 2-3
Engine Block ..... 2-4
Engine Lubrication ..... 2-5
Cooling System ..... 2-6
Fuel and Emissions ..... 2-6
Automatic Transmission and A/T Differential ..... 2-7
Rear Differential ..... 2-16
Steering ..... 2-16
Suspension ..... 2-16
Brakes ..... 2-17
Air Conditioning ..... 2-17

## Design Specifications

Dimensions ..... 2-18
Weight ..... 2-18
Engine ..... 2-18
Starter ..... 2-18
Automatic Transmission ..... 2-18
Steering ..... 2-19
Suspension ..... 2-19
Tires ..... 2-19
Wheel Alignment ..... 2-19
Brakes ..... 2-19
Air Conditioning ..... 2-19
Electrical Ratings ..... 2-20
Body Specifications ..... 2-21

Protected by AR

# Standards and Service Limits

## Engine Electrical

| Item | Measurement | Qualification | Standard or New | Service Limit |
|---|---|---|---|---|
| Ignition coil | Rated voltage | | 12 V | |
| | Firing order | | 1—3—4—2 | |
| Spark plug | Type | | NGK: SILKR8A-S | |
| | Gap | | 0.7—0.8 mm (0.028—0.031 in.) | ——— |
| Ignition timing | At idle<br>Check the *red* mark | In N or P position | 14±2 °BTDC | |
| Drive belt | Tension | | Auto-tensioner | |
| Alternator | Output | At 13.5 V and normal engine temperature | 105 A | |
| | Coil (rotor) resistance | At 68 °F (20 °C) | 3.2 –4.0 Ω | |
| | Slip ring O.D. | | 14.4 mm (0.57 in.) | 14.0 mm (0.55 in.) |
| | Brush length | | 10.5 mm (0.41 in.) | 1.5 mm (0.06 in.) |
| | Brush spring tension | | 3.2 N (0.33 kgf, 0.7 lbf) | |
| Starter | Output | | 1.6 kW | |
| | Commutator mica depth | | 0.40—0.50 mm (0.016—0.020 in.) | 0.15 mm (0.006 in.) |
| | Commutator runout | | 0.02 mm (0.001 in.) max. | 0.05 mm (0.002 in.) |
| | Commutator O.D. | | 28.0—28.1 mm (1.10—1.11 in.) | 27.5 mm (1.08 in.) |
| | Brush length | | 11.1—11.5 mm (0.44—0.45 in.) | 4.3 mm (0.17 in.) |
| | Brush spring tension | | 13.7—17.7 N (1.40—1.80 kgf, 3.09—3.97 lbf) | |

## Engine Assembly

| Item | Measurement | Qualification | Standard or New |
|---|---|---|---|
| Compression | Pressure | Minimum | 930 kPa (9.5 kgf/cm², 135 psi) |
| | Check the engine with the starter cranking | Maximum variation | 200 kPa (2.0 kgf/cm², 28 psi) |



BACK

Protected by AR



## Cylinder Head

| Item | Measurement | Qualification | Standard or New | Service Limit |
|---|---|---|---|---|
| Head | Warpage | | ——— | 0.05 mm (0.002 in.) |
| | Height | | 103.95—104.05 mm (4.093—4.096 in.) | ——— |
| Camshaft | End play | | 0.05—0.20 mm (0.002—0.008 in.) | 0.4 mm (0.02 in.) |
| | Camshaft-to-holder oil clearance | No. 1 journal | 0.030—0.069 mm (0.001—0.003 in.) | 0.15 mm (0.006 in.) |
| | | No. 2, 3, 4, 5 journals | 0.060—0.099 mm (0.002—0.004 in.) | 0.15 mm (0.006 in.) |
| | Total runout | | 0.03 mm (0.001 in.) max. | 0.04 mm (0.002 in.) |
| | Cam lobe height | Intake, primary | 33.925 mm (1.3356 in.) | ——— |
| | | Intake, secondary | 29.638 mm (1.1668 in.) | ——— |
| | | Exhaust | 34.092 mm (1.3422 in.) | ——— |
| Valve | Clearance (cold) | Intake | 0.21—0.25 mm (0.008—0.010 in.) | ——— |
| | | Exhaust | 0.28—0.32 mm (0.011—0.013 in.) | ——— |
| | Stem O.D. | Intake | 5.475—5.485 mm (0.2156—0.2159 in.) | 5.445 mm (0.214 in.) |
| | | Exhaust | 5.450—5.460 mm (0.2146—0.2150 in.) | 5.420 mm (0.213 in.) |
| | Stem-to-guide clearance | Intake | 0.030—0.055 mm (0.0012—0.0022 in.) | 0.08 mm (0.003 in.) |
| | | Exhaust | 0.055—0.080 mm (0.0022—0.0031 in.) | 0.11 mm (0.004 in.) |
| Valve seat | Width | Intake | 1.25—1.55 mm (0.049—0.061 in.) | 2.00 mm (0.079 in.) |
| | | Exhaust | 1.25—1.55 mm (0.049—0.061 in.) | 2.00 mm (0.079 in.) |
| | Stem installed height | Intake | 44.0—44.5 mm (1.73—1.75 in.) | 44.7 mm (1.76 in.) |
| | | Exhaust | 44.1—44.6 mm (1.74—1.76 in.) | 44.8 mm (1.76 in.) |
| Valve spring | Free length | Intake | 47.61 mm (1.874 in.) | ——— |
| | | Exhaust | 49.64 mm (1.954 in.) | ——— |
| Valve guide | I.D. | Intake | 5.515—5.530 mm (0.2171—0.2177 in.) | 5.55 mm (0.219 in.) |
| | | Exhaust | 5.515—5.530 mm (0.2171—0.2177 in.) | 5.55 mm (0.219 in.) |
| | Installed height | Intake | 15.2—16.2 mm (0.598—0.638 in.) | ——— |
| | | Exhaust | 15.5—16.5 mm (0.610—0.650 in.) | ——— |
| Rocker arm | Arm-to-shaft clearance | Intake | 0.025—0.052 mm (0.0010—0.0020 in.) | 0.08 mm (0.003 in.) |
| | | Exhaust | 0.018—0.056 mm (0.0007—0.0022 in.) | 0.08 mm (0.003 in.) |

BACK

Protected by AR

# Standards and Service Limits

## Engine Block

| Item | Measurement | Qualification | Standard or New | Service Limit |
|---|---|---|---|---|
| Block | Warpage of deck | | 0.07 mm (0.003 in.) max. | 0.10 mm (0.004 in.) |
| | Bore diameter | A or I | 86.010—86.020 mm (3.3862—3.3866 in.) | 86.070 mm (3.3886 in.) |
| | | B or II | 86.000—86.010 mm (3.3858—3.3862 in.) | 86.070 mm (3.3886 in.) |
| | Bore taper | | ——— | 0.05 mm (0.002 in.) |
| | Reboring limit | | ——— | 0.25 mm (0.01 in.) |
| Piston | Skirt O.D. at 10 mm (0.4 in.) from bottom of skirt | /(slash) | 85.980—85.990 mm (3.3850—3.3854 in.) | 85.930 mm (3.3831 in.) |
| | | B | 85.970—85.980 mm (3.3846—3.3850 in.) | 85.920 mm (3.3827 in.) |
| | Clearance in cylinder | | 0.020—0.040 mm (0.0008—0.0016 in.) | 0.05 mm (0.002 in.) |
| | Ring groove width | Top | 1.535—1.565 mm (0.0604—0.0616 in.) | 1.25mm (0.049 in.) |
| | | Second | 1.230—1.240 mm (0.0484—0.0488 in.) | 1.25mm (0.049 in.) |
| | | Oil | 2.010—2.020 mm (0.0791—0.0795 in.) | 2.05mm (0.081 in.) |
| Piston ring | Ring-to-groove clearance | Top | 0.045—0.090 mm (0.0018—0.0035 in.) | 0.13 mm (0.005 in.) |
| | | Second | 0.040—0.065 mm (0.0016—0.0026 in.) | 0.13 mm (0.005 in.) |
| | | Oil | 0.020—0.050 mm (0.0008—0.0020 in.) | 0.08 mm (0.003 in.) |
| | Ring end gap | Top | 0.20—0.30 mm (0.008—0.012 in.) | 0.60 mm (0.024 in.) |
| | | Second | 0.40—0.50 mm (0.016—0.020 in.) | 0.75 mm (0.030 in.) |
| | | Oil | 0.10—0.30 mm (0.004—0.012 in.) | 0.80 mm (0.031 in.) |
| Piston pin | O.D. | | 21.962—21.965 mm (0.8646—0.8648 in.) | 21.953 mm (0.8643 in.) |
| | Pin-to-piston clearance | | −0.005 to +0.002 mm (−0.00020 to +0.00008 in.) | 0.005 mm (0.0002 in.) |
| Connecting rod | Pin-to-rod clearance | | 0.005—0.014 mm (0.0002—0.0006 in.) | 0.02 mm (0.0008 in.) |
| | Small-end bore diameter | | 21.970—21.976 mm (0.8650—0.8652 in.) | ——— |
| | Large-end bore diameter | | 51.0 mm (2.01 in.) | ——— |
| | End play installed on crankshaft | | 0.15—0.35 mm (0.006—0.014 in.) | 0.40 mm (0.016 in.) |
| Crankshaft | Main journal diameter | No. 1 journal<br>No. 2 journal<br>No. 4 journal<br>No. 5 journal | 54.984—55.008 mm (2.1648—2.1657 in.) | ——— |
| | | No. 3 journal | 54.976—55.000 mm (2.1644—2.1654 in.) | ——— |
| | Rod journal diameter | | 47.976—48.000 mm (1.8888—1.8898 in.) | ——— |
| | Rod/main journal taper | | 0.004 mm (0.0002 in.) max. | 0.010 mm (0.0004 in.) |
| | Rod/main journal out-of-round | | 0.005 mm (0.0002 in.) max. | 0.010 mm (0.0004 in.) |
| | End play | | 0.10—0.35 mm (0.004—0.014 in.) | 0.45 mm (0.018 in.) |
| | Runout | | 0.02 mm (0.0008 in.) max. | 0.04 mm (0.0016 in.) |
| Crankshaft bearing | Main bearing-to-journal oil clearance | No. 1 journal<br>No. 2 journal<br>No. 4 journal<br>No. 5 journal | 0.017—0.041 mm (0.0007—0.0016 in.) | 0.050 mm (0.0020 in.) |
| | | No. 3 journal | 0.025—0.049 mm (0.0010—0.0019 in.) | 0.055 mm (0.0022 in.) |
| | Rod bearing clearance | | 0.033—0.064 mm (0.0013—0.0025 in.) | 0.077 mm (0.0030 in.) |



BACK

Protected by AR



## Engine Lubrication

| Item | Measurement | Qualification | Standard or New | Service Limit |
|---|---|---|---|---|
| Engine oil | Capacity | Engine overhaul | 5.8 L (6.1 US qt) | |
| | | Oil change including filter | 4.7 L (5.0 US qt) | |
| | | Oil change without filter | 4.5 L (4.8 US qt) | |
| Oil pump | Inner-to-outer rotor clearance | | 0.10—0.17 mm (0.004—0.007 in.) | 0.20 mm (0.008 in.) |
| | Pump housing-to-outer rotor clearance | | 0.035—0.090 mm (0.0014—0.0035 in.) | 0.23 mm (0.009 in.) |
| | Pump housing-to-outer rotor axial clearance | | 0.030—0.075 mm (0.0012—0.0030 in.) | 0.12 mm (0.005 in.) |
| | Balancer shafts, journal diameter | No. 1 journal, front shaft | 19.938—19.950 mm (0.7850—0.7854 in.) | 19.92 mm (0.784 in.) |
| | | No. 1 journal, rear shaft | 23.938—23.950 mm (0.9424—0.9429 in.) | 23.92 mm (0.942 in.) |
| | | No. 2 journal, front and rear shaft | 32.949—32.961 mm (1.2972—1.2977 in.) | 32.93 mm (1.296 in.) |
| | Balancer shafts, journal taper | | 0.005 mm (0.0002 in.) max. | ——— |
| | Balancer shafts, end play | Front | 0.060—0.140 mm (0.0024—0.0055 in.) | 0.14 mm (0.0055 in.) |
| | | Rear | 0.060—0.140 mm (0.0024—0.0055 in.) | 0.14 mm (0.0055 in.) |
| | Balancer shafts, shaft-to-bearing clearance | No. 1 journal, front shaft | 0.050—0.082 mm (0.0020—0.0032 in.) | 0.10 mm (0.004 in.) |
| | | No. 1 journal, rear shaft | 0.050—0.082 mm (0.0020—0.0032 in.) | 0.10 mm (0.004 in.) |
| | | No. 2 journal, front and rear shaft | 0.060—0.120 mm (0.0024—0.0047 in.) | 0.15 mm (0.006 in.) |
| | Balancer shaft bearings, I.D. | No. 1 journal, front shaft | 20.000—20.020 mm (0.7874—0.7882 in.) | 20.03 mm (0.789 in.) |
| | | No. 1 journal, rear shaft | 24.000—24.020 mm (0.9449—0.9457 in.) | 24.03 mm (0.946 in.) |
| | | No. 2 journal, front and rear shaft | 33.021—33.069 mm (1.3000—1.3019 in.) | 33.09 mm (1.303 in.) |
| | Relief valve, oil pressure with oil temperature at 176 °F (80 °C) | At idle | 70 kPa (0.7 kgf/cm², 10 psi) min. | |
| | | At 3,000 rpm | 300 kPa (3.1 kgf/cm², 44 psi) min. | |

BACK

Protected by AR

# Standards and Service Limits

## Cooling System

| Item | Measurement | Qualification | Standard or New |
|---|---|---|---|
| Radiator | Coolant capacities (including engine, heater, hoses, and reservoir) Use Acura Long Life Antifreeze/ Coolant Type 2 | Engine overhaul | 8.4 L (2.22 US gal) |
| | | Coolant change | 7.0 L (1.85 US gal) |
| Coolant reservoir | Coolant capacity | | 0.7 L (0.18 US gal) |
| Radiator cap | Opening pressure | | 93—123 kPa (0.95—1.25 kgf/cm², 14—18 psi) |
| Thermostat | Opening temperature | Begins to open | 169—176 °F (76—80 °C) |
| | | Fully open | 194 °F (90 °C) |
| | Valve lift at fully open | | 8.0 mm (0.31 in.) |

## Fuel and Emissions

| Item | Measurement | Qualification | Standard or New |
|---|---|---|---|
| Fuel pressure regulator | Pressure with fuel pressure regulator vacuum hose disconnected | | 320—370 kPa (3.3—3.8 kgf/cm², 47—54 psi) |
| Fuel tank | Capacity | | 68 L (18 US gal) |
| Engine idle | Idle speed without load | In N or P position | 720±50 rpm |
| | Idle speed with high electrical load (A/C switch ON, temperature set to Max Cool, blower fan on High, rear window defogger ON, and headlights on high beam) | In N or P position | 720±50 rpm |



BACK

Protected by AR



## Automatic Transmission and A/T Differential

| Item | Measurement | Qualification | Standard or New | Service Limit |
|---|---|---|---|---|
| Automatic transmission fluid | Capacity<br>Use Acura ATF-Z1 | Fluid change | 3.3 L (3.5 US qt) | |
| | | Overhaul | 7.8 L (8.2 US qt) | |
| ATF pressure | Line pressure | At 2,000 rpm in N or P position | 950—1,010 kPa (9.7—10.3 kgf/cm², 140—146 psi) | 900 kPa (9.2 kgf/cm², 130 psi) |
| | 5th clutch pressure | At 2,000 rpm in 5th gear | 940—1,020 kPa (9.6—10.4 kgf/cm², 140—148 psi) | 890 kPa (9.1 kgf/cm², 130 psi) |
| | 4th clutch pressure | At 2,000 rpm in 4th gear | 940—1,020 kPa (9.6—10.4 kgf/cm², 140—148 psi) | 890 kPa (9.1 kgf/cm², 130 psi) |
| | 3rd clutch pressure | At 2,000 rpm in 3rd gear | 940—1,020 kPa (9.6—10.4 kgf/cm², 140—148 psi) | 890 kPa (9.1 kgf/cm², 130 psi) |
| | 2nd clutch pressure | At 2,000 rpm in 2nd gear | 940—1,020 kPa (9.6—10.4 kgf/cm², 140—148 psi) | 890 kPa (9.1 kgf/cm², 130 psi) |
| | 1st clutch pressure | At 2,000 rpm in 1st gear | 940—1,020 kPa (9.6—10.4 kgf/cm², 140—148 psi) | 890 kPa (9.1 kgf/cm², 130 psi) |
| | 1st-hold clutch pressure | At 2,000 rpm in 1st gear | 760—830 kPa (7.7—8.5 kgf/cm², 110—120 psi) | 710 kPa (7.2 kgf/cm², 100 psi) |
| Torque converter | Stall speed<br>Check with vehicle on level ground | | 1,950 rpm | 1,800—2,100 rpm |
| Clutch | Clutch end-plate-to-top-disc clearance | 1st | ——— | 1.15—1.35 mm (0.045—0.053 in.) |
| | | 2nd | ——— | 1.00—1.02 mm (0.039—0.047 in.) |
| | | 3rd | ——— | 0.8—1.0 mm (0.031—0.039 in.) |
| | | 4th, 5th | ——— | 0.75—0.95 mm (0.030—0.037 in.) |
| | | 1st-hold | ——— | 0.6—1.0 mm (0.024—0.039 in.) |
| | Clutch return spring free length | 1st | 68.3 mm (2.69 in.) | 66.3 mm (2.61 in.) |
| | | 2nd | 48.3 mm (1.90 in.) | 46.3 mm (1.82 in.) |
| | | 3rd | 52.0 mm (2.05 in.) | 50.0 mm (1.97 in.) |
| | | 4th | 37.4 mm (1.47 in.) | 35.4 mm (1.39 in.) |
| | | 5th | 50.0 mm (1.97 in.) | 48.0 mm (1.89 in.) |
| | Clutch disc thickness | | 1.94 mm (0.076 in.) | ——— |
| | Clutch plate thickness | 1st | 1.6 mm (0.063 in.) | When discolored |
| | | 2nd | 1.8 mm (0.071 in.) | When discolored |
| | | 3rd | 2.0 mm (0.079 in.) | When discolored |
| | | 4th, 5th | 1.6 mm (0.063 in.) | When discolored |
| | | 1st-hold | 1.8 mm (0.071 in.) | When discolored |
| | 1st clutch end plate thickness | Mark 1 | 3.1 mm (0.122 in.) | When discolored |
| | | Mark 2 | 3.2 mm (0.126 in.) | When discolored |
| | | Mark 3 | 3.3 mm (0.130 in.) | When discolored |
| | | Mark 4 | 3.4 mm (0.134 in.) | When discolored |
| | | Mark 5 | 3.5 mm (0.138 in.) | When discolored |
| | | Mark 6 | 3.6 mm (0.142 in.) | When discolored |
| | | Mark 7 | 3.7 mm (0.146 in.) | When discolored |
| | | Mark 8 | 3.8 mm (0.150 in.) | When discolored |
| | | Mark 9 | 3.9 mm (0.154 in.) | When discolored |
| | 1st-hold clutch plate B thickness | | 5.0 mm (0.197 in.) | When discolored |

(cont'd)

Protected by AR

# Standards and Service Limits

## Automatic Transmission and A/T Differential (cont'd)

| Item | Measurement | Qualification | Standard or New | Service Limit |
|---|---|---|---|---|
| Clutch (cont'd) | 2nd, 3rd, 4th, and 5th clutch end plate thickness | Mark 1 | 2.1 mm (0.083 in.) | When discolored |
| | | Mark 2 | 2.2 mm (0.087 in.) | When discolored |
| | | Mark 3 | 2.3 mm (0.091 in.) | When discolored |
| | | Mark 4 | 2.4 mm (0.094 in.) | When discolored |
| | | Mark 5 | 2.5 mm (0.098 in.) | When discolored |
| | | Mark 6 | 2.6 mm (0.102 in.) | When discolored |
| | | Mark 7 | 2.7 mm (0.106 in.) | When discolored |
| | | Mark 8 | 2.8 mm (0.110 in.) | When discolored |
| | | Mark 9 | 2.9 mm (0.114 in.) | When discolored |
| Stator shaft | I.D. at needle bearing contact area | Torque converter side | 27.000—27.021 mm (1.063—1.064 in.) | When worn or damaged |
| | | ATF pump side | 31.000—31.025 mm (1.220—1.221 in.) | ——— |
| | I.D. at mainshaft sealing ring contact area | | 31.000—31.025 mm (1.220—1.221 in.) | 31.05 mm (1.222 in.) |
| ATF pump | Gear-to-body thrust clearance | | 0.03—0.06 mm (0.001—0.002 in.) | 0.07 mm (0.003 in.) |
| | Gear-to-body clearance | Drive gear | 0.210—0.265 mm (0.008—0.010 in.) | ——— |
| | | Driven gear | 0.070—0.125 mm (0.003—0.005 in.) | ——— |
| | Driven gear I.D. | | 14.016—14.034 mm (0.5518—0.5525 in.) | When worn or damaged |
| | Driven gear shaft O.D. | | 13.980—13.990 mm (0.5504—0.5508 in.) | When worn or damaged |
| Reverse shift fork | Fork finger thickness | | 5.90—6.00 mm (0.220—0.236 in.) | 5.4 mm (0.213 in.) |
| Park gear and pawl | ——— | | ——— | When worn or damaged |
| Regulator valve body | Shift fork shaft bore I.D. | | 14.000—14.010 mm (0.5512—0.5516 in.) | ——— |
| | Shift fork shaft/servo valve bore I.D. | | 37.000—37.039 mm (1.4567—1.4582 in.) | 37.045 mm (1.4585 in.) |
| | Mainshaft sealing ring contact I.D. | | 31.000—31.025 mm (1.220—1.221 in.) | 31.05 mm (1.222 in.) |
| Main valve body | Third shaft sealing ring contact I.D. | | 35.000—35.025 mm (1.3780—1.3789 in.) | 35.05 mm (1.3799 in.) |
| ATF guide collar | Secondary shaft sealing ring contact I.D. | | 29.000—29.021 mm (1.1417—1.1426 in.) | 29.05 mm (1.1437 in.) |
| Mainshaft | Diameter at stator shaft needle bearing contact area | | 22.984—23.000 mm (0.9049—0.9055 in.) | When worn or damaged |
| | 5th gear collar diameter at needle bearing contact area | | 39.975—39.991 mm (1.5738—1.5744 in.) | When worn or damaged |
| | 5th gear collar length | | 48.7—48.8 mm (1.917—1.921 in.) | ——— |
| | 5th gear collar flange thickness | | 5.15—5.30 mm (0.203—0.209 in.) | When worn or damaged |
| | 5th gear I.D. | | 46.000—46.016 mm (1.8110—1.8116 in.) | When worn or damaged |
| | 5th gear axial clearance | | 0.10—0.22 mm (0.004—0.009 in.) | ——— |
| | Sealing ring thickness | | 1.90—1.96 mm (0.074—0.077 in.) | 1.85 mm (0.073 in.) |
| | Sealing ring groove width | | 2.025—2.060 mm (0.080—0.081 in.) | 2.08 mm (0.082 in.) |



BACK

Protected by AR



| Item | Measurement | Qualification | Standard or New | Service Limit |
|---|---|---|---|---|
| Countershaft | Diameter at bearing contact area | Torque converter housing bearing | 40.505—40.515 mm (1.5947—1.5951 in.) | When worn or damaged |
| | | 5th gear | 34.975—34.991 mm (1.3770—1.3776 in.) | When worn or damaged |
| | Diameter of 2nd gear at needle bearing contact area | | 61.975—61.991 mm (2.2400—2.2406 in.) | When worn or damaged |
| | Reverse gear collar O.D. | | 39.979—40.000 mm (1.5740—1.5748 in.) | When worn or damaged |
| | Reverse selector hub O.D. | | 55.885—55.900 mm (2.200—2.201 in.) | When worn or damaged |
| | Cotter thickness | 4th gear | 1.99—2.02 mm (0.078—0.080 in.) | ——— |
| | | 2nd gear | 7.74—7.52 mm (0.295—0.296 in.) | ——— |
| | I.D. of gears | 5th gear | 41.000—41.016 mm (1.6142—1.6148 in.) | When worn or damaged |
| | | Idler gear | 70.000—70.019 mm (2.7559—2.7567 in.) | When worn or damaged |
| | | Reverse gear | 46.000—46.016 mm (1.8110—1.8116 in.) | When worn or damaged |
| | Axial clearance of gears | 2nd gear | 0.005—0.040 mm (0.0002—0.0016 in.) | ——— |
| | | 5th gear | 0.12—0.27 mm (0.0047—0.0106 in.) | ——— |
| | | Idler gear | 0.005—0.040 mm (0.0002—0.0016 in.) | ——— |
| | | Reverse gear | 0.10—0.25 mm (0.0039—0.0098 in.) | ——— |
| | 61 mm washer thickness | A | 1.525 mm (0.0600 in.) | When worn or damaged |
| | | B | 1.505 mm (0.0593 in.) | When worn or damaged |
| | | C | 1.485 mm (0.0585 in.) | When worn or damaged |
| | | D | 1.465 mm (0.0577 in.) | When worn or damaged |
| | | E | 1.445 mm (0.0569 in.) | When worn or damaged |
| | | F | 1.425 mm (0.0561 in.) | When worn or damaged |
| | | G | 1.405 mm (0.0553 in.) | When worn or damaged |
| | 50.8 mm washer thickness | A | 1.91 mm (0.0752 in.) | When worn or damaged |
| | | B | 1.93 mm (0.0760 in.) | When worn or damaged |
| | | C | 1.95 mm (0.0768 in.) | When worn or damaged |
| | | D | 1.97 mm (0.0776 in.) | When worn or damaged |
| | | E | 1.99 mm (0.0783 in.) | When worn or damaged |
| | | F | 2.01 mm (0.0791 in.) | When worn or damaged |
| | | G | 2.03 mm (0.0794 in.) | When worn or damaged |
| | | H | 2.05 mm (0.0807 in.) | When worn or damaged |
| | | I | 2.07 mm (0.0815 in.) | When worn or damaged |
| | | J | 2.09 mm (0.0823 in.) | When worn or damaged |
| | | K | 2.11 mm (0.0831 in.) | When worn or damaged |
| | | L | 2.13 mm (0.0839 in.) | When worn or damaged |
| | | M | 2.15 mm (0.0846 in.) | When worn or damaged |
| | | N | 2.17 mm (0.0854 in.) | When worn or damaged |
| | | O | 2.19 mm (0.0862 in.) | When worn or damaged |
| | | P | 2.21 mm (0.0870 in.) | When worn or damaged |
| | | Q | 2.23 mm (0.0878 in.) | When worn or damaged |
| | | R | 2.25 mm (0.0886 in.) | When worn or damaged |
| | | S | 2.27 mm (0.0894 in.) | When worn or damaged |
| | | T | 2.29 mm (0.0902 in.) | When worn or damaged |
| | | U | 2.31 mm (0.0909 in.) | When worn or damaged |
| | | V | 2.33 mm (0.0917 in.) | When worn or damaged |
| | | W | 2.35 mm (0.0925 in.) | When worn or damaged |
| | | X | 2.37 mm (0.0933 in.) | When worn or damaged |
| | | Y | 2.39 mm (0.0941 in.) | When worn or damaged |
| | | Z | 2.41 mm (0.0949 in.) | When worn or damaged |
| | | AA | 2.43 mm (0.0957 in.) | When worn or damaged |
| | | AB | 2.45 mm (0.0965 in.) | When worn or damaged |
| | Thrust washer thickness | | 3.00 mm (0.118 in.) | When worn or damaged |

(cont'd)

BACK

Protected by AR

# Standards and Service Limits

## Automatic Transmission and A/T Differential (cont'd)

| Item | Measurement | Qualification | Standard or New | Service Limit |
|---|---|---|---|---|
| Secondary shaft | Diameter at bearing contact area | 2nd gear | 43.986—43.999 mm (1.7317—1.7322 in.) | When worn or damaged |
| | | Torque converter housing bearing | 32.002—32.015 mm (1.2599—1.2604 in.) | When worn or damaged |
| | | Torque converter housing bearing (shaft end side) | 28.592—28.608 mm (1.1257—1.1263 in.) | When worn or damaged |
| | Diameter of 1st gear collar at needle bearing contact area | | 38.975—38.991 mm (1.5344—1.5351 in.) | When worn or damaged |
| | I.D. of gears | 1st gear | 44.000—44.013 mm (1.7323—1.7328 in.) | When worn or damaged |
| | | 2nd gear | 50.00—50.02 mm (1.9685—1.9693 in.) | When worn or damaged |
| | Axial clearance of gears | 1st gear | 0.100—0.130 mm (0.0039—0.0051 in.) | ——— |
| | | 2nd gear | 0.060—0.228 mm (0.0024—0.0090 in.) | ——— |
| | 52 mm thrust washer thickness | M | 2.405 mm (0.095 in.) | When worn or damaged |
| | | L | 2.430 mm (0.096 in.) | When worn or damaged |
| | | K | 2.455 mm (0.097 in.) | When worn or damaged |
| | | J | 2.480 mm (0.098 in.) | When worn or damaged |
| | | I | 2.505 mm (0.099 in.) | When worn or damaged |
| | | H | 2.530 mm (0.100 in.) | When worn or damaged |
| | | G | 2.555 mm (0.101 in.) | When worn or damaged |
| | | F | 2.580 mm (0.102 in.) | When worn or damaged |
| | | E | 2.605 mm (0.103 in.) | When worn or damaged |
| | | D | 2.630 mm (0.104 in.) | When worn or damaged |
| | | C | 2.655 mm (0.105 in.) | When worn or damaged |
| | | B | 2.680 mm (0.106 in.) | When worn or damaged |
| | | A | 2.705 mm (0.106 in.) | When worn or damaged |
| | 1st gear collar length | | 63.3—63.4 mm (2.4921—2.4961 in.) | ——— |
| | Sealing ring thickness | | 1.91—1.97 mm (0.075—0.078 in.) | 1.86 mm (0.073 in.) |
| | Sealing ring groove width | | 2.025—2.060 mm (0.080—0.081 in.) | 2.08 mm (0.082 in.) |
| | ATF feed pipe O.D. | 1st clutch | 11.47—11.48 mm (0.4516—0.4520 in.) | 11.45 mm (0.4508 in.) |
| | | 1st-hold clutch | 5.97—5.98 mm (0.2350—0.2354 in.) | 5.95 mm (0.2343 in.) |
| | Feed pipe bushing I.D. | 1st clutch | 11.518—11.530 mm (0.4535—0.4539 in.) | 11.545 mm (0.4545 in.) |
| | | 1st-hold clutch | 6.018—6.030 mm (0.2369—0.2374 in.) | 6.045 mm (0.2380 in.) |



BACK

Protected by AR



| Item | Measurement | Qualification | Standard or New | Service Limit |
|---|---|---|---|---|
| Secondary shaft (cont'd) | 65 mm thrust shim thickness | 0A | 0.80 mm (0.031 in.) | When worn or damaged |
| | | A | 0.84 mm (0.033 in.) | When worn or damaged |
| | | B | 0.88 mm (0.035 in.) | When worn or damaged |
| | | C | 0.92 mm (0.036 in.) | When worn or damaged |
| | | D | 0.96 mm (0.038 in.) | When worn or damaged |
| | | E | 1.00 mm (0.039 in.) | When worn or damaged |
| | | F | 1.04 mm (0.041 in.) | When worn or damaged |
| | | G | 1.08 mm (0.043 in.) | When worn or damaged |
| | | H | 1.12 mm (0.044 in.) | When worn or damaged |
| | | I | 1.16 mm (0.046 in.) | When worn or damaged |
| | | J | 1.20 mm (0.047 in.) | When worn or damaged |
| | | K | 1.24 mm (0.049 in.) | When worn or damaged |
| | | L | 1.28 mm (0.050 in.) | When worn or damaged |
| | | M | 1.32 mm (0.052 in.) | When worn or damaged |
| | | N | 1.36 mm (0.054 in.) | When worn or damaged |
| | | O | 1.40 mm (0.055 in.) | When worn or damaged |
| | | P | 1.44 mm (0.057 in.) | When worn or damaged |
| | | Q | 1.48 mm (0.058 in.) | When worn or damaged |
| | | R | 1.52 mm (0.060 in.) | When worn or damaged |
| | | S | 1.56 mm (0.061 in.) | When worn or damaged |
| | | T | 1.60 mm (0.063 in.) | When worn or damaged |
| | | U | 1.64 mm (0.065 in.) | When worn or damaged |
| | | V | 1.68 mm (0.066 in.) | When worn or damaged |
| | | W | 1.72 mm (0.068 in.) | When worn or damaged |
| | | X | 1.76 mm (0.069 in.) | When worn or damaged |
| | | Y | 1.80 mm (0.071 in.) | When worn or damaged |
| | | Z | 1.84 mm (0.072 in.) | When worn or damaged |
| | | AA | 1.88 mm (0.074 in.) | When worn or damaged |
| | | AB | 1.92 mm (0.076 in.) | When worn or damaged |
| | | AC | 1.96 mm (0.077 in.) | When worn or damaged |
| | | AD | 2.00 mm (0.079 in.) | When worn or damaged |
| | | AE | 2.04 mm (0.080 in.) | When worn or damaged |
| | | AF | 2.08 mm (0.082 in.) | When worn or damaged |
| | | AG | 2.12 mm (0.083 in.) | When worn or damaged |
| | | AH | 2.16 mm (0.085 in.) | When worn or damaged |
| | | AI | 2.20 mm (0.087 in.) | When worn or damaged |
| | | AJ | 2.24 mm (0.088 in.) | When worn or damaged |
| | | AK | 2.28 mm (0.090 in.) | When worn or damaged |
| | | AL | 2.32 mm (0.091 in.) | When worn or damaged |

(cont'd)

Protected by AR

# Standards and Service Limits

## Automatic Transmission and A/T Differential (cont'd)

| Item | Measurement | Qualification | Standard or New | Service Limit |
|---|---|---|---|---|
| Intermediary shaft | I.D. of 3rd gear | | 36.000—36.016 mm (1.4173—1.4179 in.) | When worn or damaged |
| | Axial clearance of 3rd gear | | 0.005—0.045 mm (0.0002—0.0018 in.) | ——— |
| | Cotter thickness | | 2.99—3.02 mm (0.1177—0.1189 in.) | ——— |
| | Sealing ring thickness | | 1.89—1.95 mm (0.0744—0.0768 in.) | 1.84 mm (0.0724 in.) |
| | Sealing ring groove width | | 2.025—2.060 mm (0.080—0.081 in.) | 2.08 mm (0.082 in.) |
| | 53 mm splined washer thickness | A | 3.995 mm (0.1573 in.) | When worn or damaged |
| | | B | 4.015 mm (0.1581 in.) | When worn or damaged |
| | | C | 4.035 mm (0.1589 in.) | When worn or damaged |
| | | D | 4.055 mm (0.1596 in.) | When worn or damaged |
| | | E | 4.075 mm (0.1604 in.) | When worn or damaged |
| | | F | 4.095 mm (0.1612 in.) | When worn or damaged |
| | | G | 4.115 mm (0.1620 in.) | When worn or damaged |
| | | H | 4.135 mm (0.1628 in.) | When worn or damaged |
| | | I | 4.155 mm (0.1636 in.) | When worn or damaged |
| | | J | 4.175 mm (0.1644 in.) | When worn or damaged |
| | | K | 4.195 mm (0.1652 in.) | When worn or damaged |
| | | L | 4.215 mm (0.1659 in.) | When worn or damaged |
| | | M | 4.235 mm (0.1667 in.) | When worn or damaged |
| | | N | 4.255 mm (0.1675 in.) | When worn or damaged |
| | 26.5 mm washer thickness | A | 1.05 mm (0.041 in.) | When worn or damaged |
| | | B | 1.13 mm (0.044 in.) | When worn or damaged |
| | | C | 1.21 mm (0.048 in.) | When worn or damaged |
| | | D | 1.29 mm (0.051 in.) | When worn or damaged |
| | | E | 1.37 mm (0.054 in.) | When worn or damaged |
| | | F | 1.45 mm (0.057 in.) | When worn or damaged |
| | | G | 1.53 mm (0.060 in.) | When worn or damaged |
| | | H | 1.61 mm (0.063 in.) | When worn or damaged |
| | | I | 1.69 mm (0.067 in.) | When worn or damaged |
| | | J | 1.77 mm (0.070 in.) | When worn or damaged |
| | | K | 1.85 mm (0.073 in.) | When worn or damaged |
| | | L | 1.93 mm (0.076 in.) | When worn or damaged |
| | | M | 2.01 mm (0.079 in.) | When worn or damaged |
| | | N | 2.09 mm (0.082 in.) | When worn or damaged |
| Reverse idler gear | Gear shaft O.D. | | 13.99—14.00 mm (0.5508—0.5512 in.) | When worn or damaged |
| | I.D. of transmission housing of gear shaft contact area | | 14.006—14.024 mm (0.5514—0.5521 in.) | ——— |
| | I.D. | | 18.007—18.020 mm (0.7089—0.7094 in.) | When worn or damaged |
| | Axial clearance | | 0.07—0.38 mm (0.003—0.015 in.) | ——— |
| | Thrust washer thickness | Transmission housing | 0.97—1.05 mm (0.038—0.041 in.) | ——— |
| | | Holder side | 0.97—1.05 mm (0.038—0.041 in.) | ——— |



BACK

Protected by AR



| Item | Measurement | Qualification | Standard or New | | | |
|---|---|---|---|---|---|---|
| | | | Wire Diameter | O.D. | Free Length | No. of Coil |
| Main valve body spring (see page 14-330) | Torque converter check valve spring | | 1.1 mm (0.043 in.) | 8.6 mm (0.339 in.) | 35.0 mm (1.378 in.) | 12.6 |
| | Lock-up shift valve spring | | 1.0 mm (0.039 in.) | 6.6 mm (0.260 in.) | 35.5 mm (1.398 in.) | 18.2 |
| | Shift valve E spring | | 0.7 mm (0.028 in.) | 6.6 mm (0.260 in.) | 42.4 mm (1.669 in.) | 17.6 |
| | Shift valve A spring | | 0.9 mm (0.035 in.) | 6.6 mm (0.260 in.) | 50.5 mm (1.988 in.) | 23.3 |
| | Shift valve B spring | | 0.8 mm (0.031 in.) | 6.6 mm (0.260 in.) | 49.1 mm (1.933 in.) | 21.7 |
| | Modulator valve spring | | 1.6 mm (0.063 in.) | 10.4 mm (0.409 in.) | 33.5 mm (1.319 in.) | 9.8 |
| | CPC valve A spring | | 0.7 mm (0.028 in.) | 6.1 mm (0.240 in.) | 17.8 mm (0.701 in.) | 7.9 |
| | Servo control valve spring | | 0.9 mm (0.035 in.) | 9.6 mm (0.378 in.) | 30.2 mm (1.189 in.) | 8.4 |
| | Lubrication control valve spring | | 0.9 mm (0.035 in.) | 8.7 mm (0.343 in.) | 25.0 mm (0.984 in.) | 7.2 |
| | Lock-up timing valve spring | | 0.6 mm (0.024 in.) | 6.6 mm (0.260 in.) | 30.8 mm (1.213 in.) | 11.1 |
| | Relief valve spring | | 1.0 mm (0.039 in.) | 9.6 mm (0.378 in.) | 28.1 mm (1.106 in.) | 7.7 |
| Secondary valve body spring (see page 14-332) | CPC valve C spring | | 0.7 mm (0.028 in.) | 6.1 mm (0.240 in.) | 17.8 mm (0.701 in.) | 7.9 |
| | Shift valve D spring | | 0.7 mm (0.028 in.) | 6.6 mm (0.260 in.) | 42.4 mm (1.669 in.) | 17.6 |
| | Reverse CPC valve spring | | 0.8 mm (0.031 in.) | 6.1 mm (0.240 in.) | 24.4 mm (0.961 in.) | 14.6 |
| | Shift valve C spring | | 0.8 mm (0.031 in.) | 6.6 mm (0.260 in.) | 49.1 mm (1.933 in.) | 21.7 |
| | CPC valve B spring | | 0.7 mm (0.028 in.) | 6.1 mm (0.240 in.) | 17.8 mm (0.701 in.) | 7.9 |
| | Reverse control valve spring | | 0.8 mm (0.031 in.) | 6.6 mm (0.260 in.) | 49.1 mm (1.933 in.) | 21.7 |
| Regulator valve body spring (see page 14-333) | 3rd accumulator spring | | 3.1 mm (0.122 in.) | 19.6 mm (0.772 in.) | 41.4 mm (1.630 in.) | 5.5 |
| | Cooler check valve spring | | 0.9 mm (0.035 in.) | 6.7 mm (0.264 in.) | 31.5 mm (1.240 in.) | 14.2 |
| | Lock-up control valve spring | | 0.7 mm (0.028 in.) | 6.6 mm (0.260 in.) | 42.9 mm (1.689 in.) | 14.2 |
| | | | 0.8 mm (0.031 in.) | 6.6 mm (0.260 in.) | 44.3 mm (1.744 in.) | 25.5 |
| | Regulator valve spring B | | 1.4 mm (0.055 in.) | 8.8 mm (0.346 in.) | 44.0 mm (1.732 in.) | 12.0 |
| | Regulator valve spring A | | 1.85 mm (0.073 in.) | 14.7 mm (0.579 in.) | 86.9 mm (3.421 in.) | 16.2 |
| | Stator reaction spring | | 5.5 mm (0.217 in.) | 37.4 mm (1.472 in.) | 30.3 mm (1.193 in.) | 2.1 |

(cont'd)

Protected by AR

# Standards and Service Limits

## Automatic Transmission and A/T Differential (cont'd)

| Item | Measurement | Qualification | Standard or New | | | |
|---|---|---|---|---|---|---|
| | | | Wire Diameter | O.D. | Free Length | No. of Coil |
| Accumulator body spring (see page 14-334) | 4th accumulator spring | | 3.3 mm (0.130 in.) | 19.6 mm (0.772 in.) | 39.1 mm (1.539 in.) | 5.8 |
| | 2nd accumulator spring | | 3.1 mm (0.122 in.) | 19.6 mm (0.772 in.) | 53.4 mm (2.102 in.) | 7.5 |
| | 1st accumulator spring A | | 2.3 mm (0.091 in.) | 19.6 mm (0.772 in.) | 60.8 mm (2.394 in.) | 9.5 |
| | 1st accumulator spring B | | 2.5 mm (0.098 in.) | 12.8 mm (0.504 in.) | 46.0 mm (1.811 in.) | 9.5 |
| | 5th accumulator spring A | | 2.4 mm (0.106 in.) | 19.6 mm (0.772 in.) | 65.5 mm (2.579 in.) | 12.0 |
| | 5th accumulator spring B | | 2.4 mm (0.094 in.) | 13.2 mm (0.520 in.) | 50.5 mm (1.988 in.) | 10.1 |
| | 1st-hold accumulator spring | | 2.0 mm (0.079 in.) | 13.1 mm (0.516 in.) | 42.9 mm (1.689 in.) | 9.8 |

| Item | Measurement | Qualification | Standard or New | Service Limit |
|---|---|---|---|---|
| A/T differential carrier | Pinion shaft contact area I.D. | | 18.000—18.025 mm (0.7087—0.7096 in.) | ——— |
| | Carrier-to-pinion shaft clearance | | 0.013—0.054 mm (0.0005—0.0021 in.) | 0.1 mm (0.004 in.) |
| | Driveshaft contact area I.D. | | 30.025—30.055 mm (1.182—1.183 in.) | ——— |
| | Carrier-to-driveshaft clearance | | 0.045—0.096 mm (0.002—0.004 in.) | 0.13 mm (0.005 in.) |
| | Carrier-to-intermediate shaft clearance | | 0.080—0.126 mm (0.003—0.005 in.) | ——— |
| | Tapered roller bearing starting torque (preload) | For new bearing | 3.9—5.1 N·m (40—52 kgf·cm, 35—45 lbf·in.) | Adjust |
| | | For used bearing | 3.6—4.8 N·m (37—49 kgf·cm, 32—43 lbf·in.) | Adjust |
| A/T differential pinion gear | Backlash | | 0.4—1.3 mm (0.016—0.051 in.) | ——— |
| | I.D. | | 18.042—18.066 mm (0.7103—0.7113 in.) | ——— |
| | Pinion gear-to-pinion shaft clearance | | 0.055—0.095 mm (0.0022—0.0037 in.) | 0.12 mm (0.005 in.) |



BACK

Protected by AR



| Item | Measurement | Qualification | Standard or New | Service Limit |
|---|---|---|---|---|
| Transfer output shaft | Diameter at bearing contact area | Transmission housing side | 21.977—21.990 mm (0.8652—0.8657 in.) | 21.92 mm (0.8630 in.) |
| | | Torque converter housing side | 40.002—40.018 mm (1.5749—1.5755 in.) | 39.95 mm (1.5728 in.) |
| | Axial clearance | | 0—0.39 mm (0—0.015 in.) | ——— |
| | 28.5 mm thrust washer thickness | A | 1.82 mm (0.0717 in.) | When worn or damaged |
| | | B | 1.84 mm (0.0724 in.) | When worn or damaged |
| | | C | 1.86 mm (0.0732 in.) | When worn or damaged |
| | | D | 1.88 mm (0.0740 in.) | When worn or damaged |
| | | E | 1.90 mm (0.0748 in.) | When worn or damaged |
| | | F | 1.92 mm (0.0756 in.) | When worn or damaged |
| | | G | 1.94 mm (0.0764 in.) | When worn or damaged |
| | | H | 1.96 mm (0.0772 in.) | When worn or damaged |
| | | I | 1.98 mm (0.0780 in.) | When worn or damaged |
| | | J | 2.00 mm (0.0787 in.) | When worn or damaged |
| | | K | 2.02 mm (0.0795 in.) | When worn or damaged |
| | | L | 2.04 mm (0.0803 in.) | When worn or damaged |
| | | M | 2.06 mm (0.0811 in.) | When worn or damaged |
| | | N | 2.08 mm (0.0819 in.) | When worn or damaged |
| | | O | 2.10 mm (0.0827 in.) | When worn or damaged |
| | | P | 2.12 mm (0.0835 in.) | When worn or damaged |
| | | Q | 2.14 mm (0.0843 in.) | When worn or damaged |
| | | R | 2.16 mm (0.0850 in.) | When worn or damaged |
| | | S | 2.18 mm (0.0858 in.) | When worn or damaged |
| | | T | 2.20 mm (0.0866 in.) | When worn or damaged |
| | | U | 2.22 mm (0.0874 in.) | When worn or damaged |
| | | V | 2.24 mm (0.0882 in.) | When worn or damaged |
| | | W | 2.26 mm (0.0890 in.) | When worn or damaged |
| | | X | 2.28 mm (0.0898 in.) | When worn or damaged |
| | | Y | 2.30 mm (0.0906 in.) | When worn or damaged |
| | | Z | 2.32 mm (0.0913 in.) | When worn or damaged |
| | | AA | 2.34 mm (0.0921 in.) | When worn or damaged |
| Transfer assembly fluid | Capacity<br>Hypoid Gear Oil<br>API classified GL4 or GL5 only<br>SAE 90 or SAE 80W-90 viscosity | Fluid change | 0.43 L (0.45 us qt) | |
| | | Overhaul | 0.45 L (0.48 us qt) | |
| Transfer assembly | Diameter of transfer hypoid drive gear/shaft assembly at tapered roller bearing contact area | Transfer cover side | 50.002—50.018 mm (1.9686—1.9692 in.) | 49.95 mm (1.9665 in.) |
| | | Transfer gear side | 24.987—25.000 mm (0.9837—0.9843 in.) | 24.93 mm (0.9815 in.) |
| | Diameter of transfer output shaft (hypoid gear) at tapered roller bearing contact area | Transfer gear side | 40.002—40.018 mm (1.5749—1.5755 in.) | 39.95 mm (1.5728 in.) |
| | | Companion flange side | 27.975—27.990 mm (1.1014—1.1020 in.) | 27.92 mm (1.0992 in.) |
| | Transfer gear backlash | | 0.06—0.16 mm (0.002—0.006 in.) | Adjust |
| | Tapered roller bearing total starting torque (preload) | | 2.75—4.65 N·m<br>(28.0—47.4 kgf·cm, 24.3—41.1 lbf·in.) | Adjust |

BACK

Protected by AR

# Standards and Service Limits

## Rear Differential

| Item | Measurement | Qualification | Standard or New |
|---|---|---|---|
| Rear differential fluid | Capacity | Fluid change | 2.53 L (2.67 US qt) |
| | Use Acura ATF-Z1 | Overhaul | 2.77 L (2.93 US qt) |

## Steering

| Item | Measurement | Qualification | Standard or New |
|---|---|---|---|
| Steering wheel | Rotational play measured at outside edge with engine running | | 0—10 mm (0—0.39 in.) |
| | Starting load measured at outside edge with engine running | | 29 N (3.0 kgf, 6.6 lbf) |
| Gearbox | Angle of rack guide screw loosened from locked position | | 15±5 ° |
| Pump | Output pressure with shut-off valve closed | | 8,150—8,850 kPa (83—90 kgf/cm², 1,180—1,280 psi) |
| Power steering fluid | Capacity | Reservoir | 0.30 L (0.32 US qt) |
| | Use Acura Power Steering Fluid | System overhaul | 0.9 L (0.96 US qt) |

## Suspension

| Item | Measurement | Qualification | Standard or New | Service Limit |
|---|---|---|---|---|
| Wheel alignment | Camber | Front | 0 ° 10 ′ ±45 ′ | |
| | | Rear | −1 ° 00 ′ ±45 ′ | |
| | Camber (Maximum difference left to right) | Front | 0 ° 30 ′ | |
| | Caster | Front | 2 ° 57 ′ ±1 ° | |
| | Total toe-in | Front | 0±2 mm (0±0.08 in.) | |
| | | Rear | 2.5±2 mm (0.082±0.08 in.) | |
| | Front wheel turning angle | Inward | 35 ° 24 ′ ±2 ° | |
| | | Outward | 30 ° 30 ′ (reference) | |
| Wheel | Runout | Axial | 0—0.7 mm (0—0.03 in.) | 2.0 mm (0.08 in.) |
| | | Radial | 0—0.7 mm (0—0.03 in.) | 1.5 mm (0.06 in.) |
| Wheel bearing | End play | Front | 0—0.05 mm (0—0.002 in.) | |
| | | Rear | 0—0.05 mm (0—0.002 in.) | |
| Tire | Front and rear size | | P235/55R18 99V M+S | |
| | Spare tire size | | T165/80D17 104M | |
| | Pressure | Front and rear | 220 kPa (2.2 kgf/cm², 32 psi) | |
| | | Spare | 420 kPa (4.2 kgf/cm², 60 psi) | |



BACK

Protected by AR



## Brakes

| Item | Measurement | Qualification | Standard or New | Service Limit |
|---|---|---|---|---|
| Parking brake | Distance traveled when pedal pressed with 294 N (30 kgf, 66 lbf) of force | | 6 to 7 clicks | |
| | Drum I.D. | | 199.9—200.0 mm (7.870—7.874 in.) | 21 mm (7.913 in.) |
| | Shoe lining thickness | | 3.2 mm (0.126 in.) | 1.0 mm (0.04 in.) |
| Brake pedal | Pedal height (carpet removed) | | 165 mm (6 1/2 in.) | |
| | Free play | | 1—5 mm (1/16—3/16 in.) | |
| Master cylinder | Piston-to-pushrod clearance | | 0 mm (0 in.) | |
| Brake disc | Thickness | Front | 27.8—28.1 mm (1.09—1.11 in.) | 26.0 mm (1.02 in.) |
| | | Rear | 8.9—9.1 mm (0.35—0.36 in.) | 7.5 mm (0.30 in.) |
| | Runout | Front | ——— | 0.04 mm (0.0016 in.) |
| | Parallelism | | ——— | 0.015 mm (0.0006 in.) |
| Brake pad | Pad thickness | Front | 11.5—12.2 mm (0.45—0.48 in.) | 1.6 mm (0.06 in.) |
| | | Rear | 8.3—9.0 mm (0.33—0.35 in.) | 1.6 mm (0.06 in.) |

## Air Conditioning

| Item | Measurement | Qualification | Standard or New |
|---|---|---|---|
| Refrigerant | Type | | HFC-134a (R-134a) |
| | Capacity of system | | 450—500 g (15.9—17.6 oz) |
| Refrigerant oil | Type | | SP-10 (P/N 38897-P13-A01AH or 38899-P13-A01) |
| | Capacity of components | Condenser | 40 mL (1/3 fl·oz) |
| | | Evaporator | 40 mL (1 1/3 fl·oz) |
| | | Each line and hose | 10 mL (1/3 fl·oz) |
| | | Compressor | 75—85 mL (2 1/2—2 5/6 fl·oz) |
| Compressor | Field coil resistance | At 68 °F (20 °C) | 3.15 —3.45 Ω |
| | Pulley-to-armature plate clearance | | 0.35—0.65 mm (0.014—0.026 in.) |

Protected by AR

# Design Specifications

| Item | Measurement | Qualification | Specification |
|---|---|---|---|
| DIMENSIONS | Overall length | | 4,590 mm (180.7 in.) |
| | Overall width | | 1,870 mm (73.6 in.) |
| | Overall height | | 1,655 mm (65.2 in.) |
| | Wheelbase | | 2,650 mm (104.3 in.) |
| | Track | Front | 1,572 mm (61.9 in.) |
| | | Rear | 1,590 mm (62.6 in.) |
| | Seating capacity | | Five (5) |
| WEIGHT | Gross Vehicle Weight Rating (GVWR) | | 2,220 kg (4,894 lbs) |
| ENGINE | Type | | Water cooled, 4-stroke DOHC i-VTEC engine, with turbo charger |
| | Cylinder arrangement | | Inline 4-cylinder, transverse |
| | Bore and stroke | | 86 x 99 mm (3.39 x 3.90 in.) |
| | Displacement | | 2,300 $cm^3$ (140.4 cu in.) |
| | Compression ratio | | 8.8 |
| | Valve train | | Chain drive, DOHC i-VTEC 4 valves per cylinder |
| | Lubrication system | | Forced, wet sump, with trochoid pump |
| | Oil pump displacement | At 12,000 pump rpm | 68 L (72 US qt)/minute |
| | Water pump displacement | At 6,000 pump rpm | 120 L (127 US qt)/minute |
| | Fuel required | | Premium UNLEADED gasoline with 91 Pump Octane Number or higher |
| STARTER | Type | | Gear Reduction |
| | Nominal output | | 1.6 kW |
| | Nominal voltage | | 12 V |
| | Hour rating | | 30 seconds |
| | Direction of rotation | | Clockwise as viewed from gear end |
| AUTOMATIC TRANSMISSION | Type | | Electronically controlled automatic, 5-speed forward, 1 reverse, 3 elemnt torque converter with lock-up clutch |
| | Primary reduction | | Direct 1:1 |
| | Gear ratio | 1st | 2.697 |
| | | 2nd | 1.606 |
| | | 3rd | 1.071 |
| | | 4th | 0.766 |
| | | 5th | 0.612 |
| | | Reverse | 1.889 |
| | Secondary reduction | Gear ratio | 1.238 |
| | Final reduction | Type | Single helical gear |
| | | Gear ratio | 4.533 |



BACK

Protected by AR



| Item | Measurement | Qualification | Specification |
|---|---|---|---|
| STEERING | Type | | Hydraulic power-assisted rack and pinion |
| | Overall ratio | | 15.6 |
| | Turns, lock-to-lock | | 2.76 |
| | Steering wheel diameter | | 380 mm (15.0 in.) |
| SUSPENSION | Type | Front | Independent McPherson with stabilizer, coil spring |
| | | Rear | Independent double wishbone with stabilizer, coil spring |
| | Shock absorber | Front | Telescopic, hydraulic, nitrogen gas-filled |
| | | Rear | Telescopic, hydraulic, nitrogen gas-filled |
| TIRES | Size of front and rear tires | | P235/55R18 99V M+S |
| | Size of spare | | T165/80D17 104M |
| WHEEL ALIGNMENT | Camber | Front | 0°10′ |
| | | Rear | −1°00′ |
| | Caster | Front | 2°57′ |
| | Total toe-in | Front | 0 mm (0 in.) |
| | | Rear | 2.5 mm (0.082 in.) |
| BRAKES | Type of service brake | Front | Power-assisted self-adjusting ventilated disc |
| | | Rear | Power-assisted self-adjusting solid disc |
| | Type of parking brake | | Mechanical actuating, rear wheels |
| | Pad friction surface area | Front | 60.5 $cm^2$ (9.38 sq in.) x 2 |
| | | Rear | 27.9 $cm^2$ (4.32 sq in.) x 2 |
| AIR CONDITIONING | Compressor | Type | Scroll |
| | | Capacity | 97.9 mL (5.97 cu in.)/rev. |
| | | Maximum speed | 10,000 rpm |
| | | Lubricant capacity | 75 mL (2 1/2 fl·oz) |
| | | Lubricant type | SP-10 |
| | Condenser | Type | Corrugated fin |
| | Evaporator | Type | Corrugated fin |
| | Blower | Type | Stabilized swirling flow |
| | | Motor type | 225 W/12 V |
| | | Speed control | Infinite variable |
| | | Maximum capacity | 490 $m^3$ (17.276 cu ft)/h |
| | Temperature control | | Air-mix type |
| | Compressor clutch | Type | Dry, single plate, poly V-belt drive |
| | | Electrical power consumption at 68 °F (20 °C) | 42 W maximum at 12 V |
| | Refrigerant | Type | HFC-134a (R-134a) |
| | | Capacity | 450—500 g (15.9—17.6 oz) |

(cont'd)

Protected by AR

# Design Specifications

| Item | Measurement | Qualification | Specification |
|---|---|---|---|
| ELECTRICAL RATINGS | Battery | | 12 V—65 Ah/20 HR (12 V—52 Ah/5 HR) |
| | Fuses | Under-hood fuse /relay box | 100 A, 80 A, 50 A, 40 A, 30 A, 20 A, 15 A, 10 A, 7.5 A |
| | | Auxiliary under-hood fuse/relay box | 7.5 A |
| | | Under-dash fuse/ relay box | 30 A, 20 A, 15 A, 10 A, 7.5 A |
| | Light bulbs | Headlight high beam | 12 V—60 W (HB3) |
| | | Headlight low beam | 12 V—35 W (D2S) HID |
| | | Fog light | 12 V—55 W (H11) |
| | | Front parking/ turn signal lights | 3/2.2 cp (two filaments) Amber Color |
| | | Front side marker lights | 3 cp |
| | | Side turn signal lights | 12 V—LED |
| | | Rear turn signal lights | 21 W |
| | | Brake/Taillights | 12 V—21/5 W (two filaments) |
| | | Lid taillights | 3 cp |
| | | Rear side marker light | 3 cp |
| | | High-mount brake light | 16 W |
| | | Back-up lights | 21 W |
| | | License plate light | 3 cp x 2 |
| | | Ceiling light | 8 W |
| | | Front individual map lights | 5 W |
| | | Vanity mirror lights | 2 W |
| | | Door courtesy lights | 2 cp |
| | | Cargo area light | 5 W |
| | | A/T gear position console light | 1.4 W |
| | | Glove box light | 1.4 W |
| | | Console box light | 1.4 W |
| | | Gauge lights | 12 V—LED (non-replaceable) |
| | | Indicator lights | 12 V—LED, 14 V—0.56 W, 14V—0.84 W |



BACK

Protected by AR



## Body Specifications

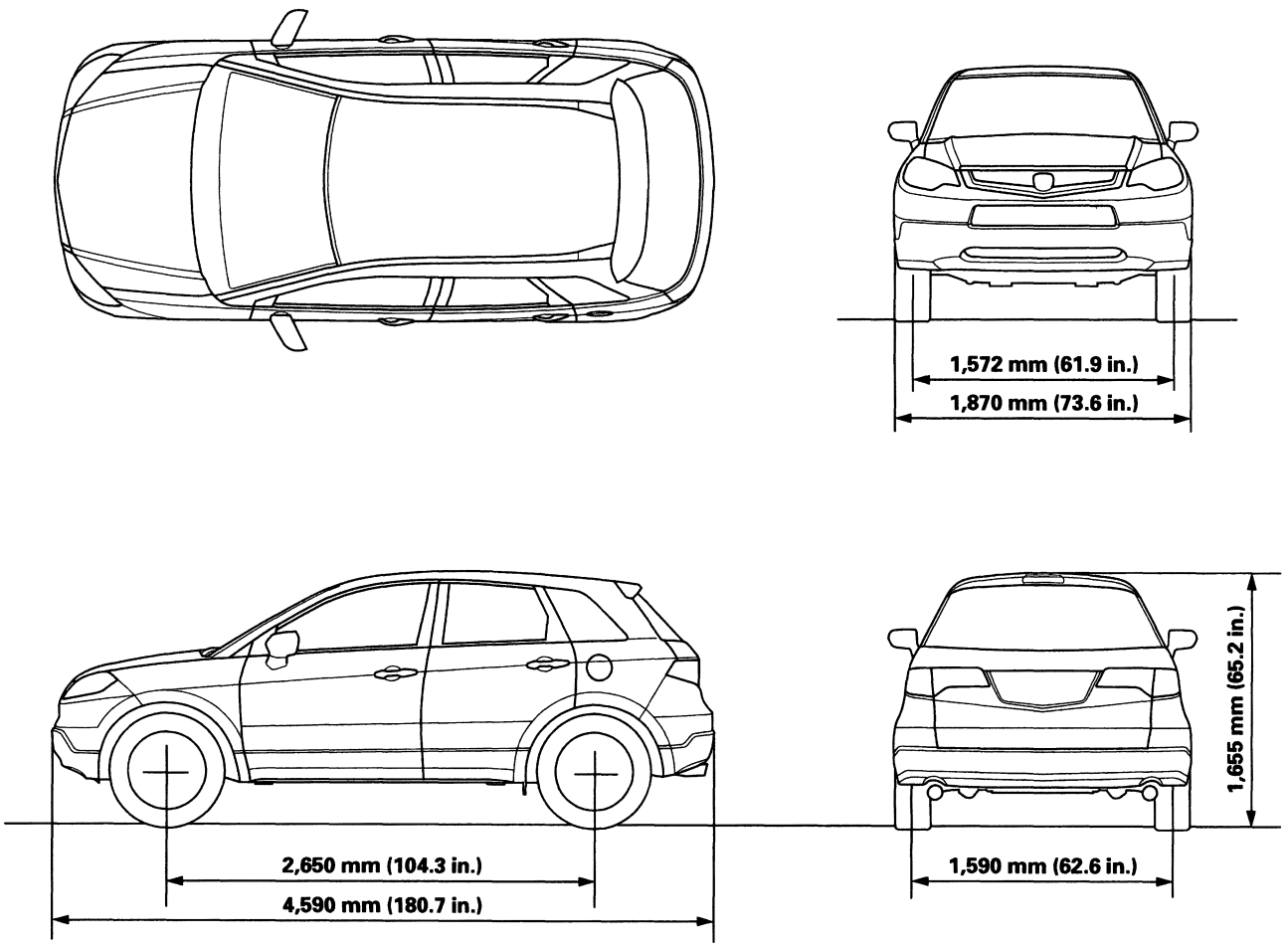

Protected by AR

BACK

Protected by AR

# Maintenance

**Lubricants and Fluids** ..... **3-2**

**Maintenance Minder**
General Information (Information Display) ..... 3-4
General Information (Multi-Information Display) ..... 3-7
Maintenance Main Items ..... 3-10
Maintenance Sub Items ..... 3-11

Protected by AR

# Lubricants and Fluids

For details of the lubrication points and type of lubricants to be applied, refer to the illustrated index and various work procedures (such as Assembly/Reassembly, Replacement, Overhaul, Installation, etc.) contained in each section.

| Application | | Lubricant or Fluid |
|---|---|---|
| A | Engine | Motor Oil:<br>American Honda: Always use Mobil 1® P/N 5W-30-MB1-000 or an equivalent oil that meets the Acura HTO-06 standard. Not all synthetic oils will meet this standards.<br>Honda Canada: Acura 5W-30 Full Synthetic P/N CA67007 or an equivalent oil that meets the Acura HTO-06 standard. Not all synthetic oils will meet this standards. |
| B | Automatic transmission | Acura Automatic Transmission Fluid (ATF-Z1):<br>American Honda P/N 08200-9001A<br>Honda Canada P/N CA66689<br>Always use Acura ATF-Z1. Using a non-ACURA ATF can affect shift quality. |
| C | Transfer assembly | Hypoid Gear Oil GL4 or GL5<br>Use a SAE 90 or SAE 80W-90 viscosity hypoid gear oil, API classified GL 4 or GL5 only.<br>Viscosity SAE 90: above 0 °F (−18 °C)<br>SAE 80W-90: below 0 °F (−18 °C) |
| D | Rear differential | Acura Automatic Transmission Fluid (ATF-Z1):<br>American Honda P/N 08200-9001A<br>Honda Canada P/N CA66689 |
| E | Brake system (including VSA line) | Acura DOT 3 Brake Fluid: P/N 08798-9008A<br>Always use Acura DOT 3 Brake Fluid. Using a non-Acura brake fluid can cause corrosion and decrease the life of the system. |
| F<br>G<br>H<br>I<br>J<br>K | Brake booster clevis<br>Battery terminals<br>Pedal linkage<br>Fuel fill door<br>Hood hinges and hood latch<br>Tailgate hinges | Multipurpose Grease |
| L | Caliper piston boot, caliper pins, and boots | Honda Silicone Grease: P/N 08C30-B0234M |
| M | Door checker | Molykote Grease 44MA |
| N | Power steering system | Acura Power Steering Fluid: P/N 08206-9002A<br>Always use Acura Power Steering Fluid. Using any other type of power steering fluid or automatic transmission fluid can cause increased wear and poor steering in cold weather. |
| O | Air conditioning compressor | Compressor Oil: ND-OIL 8 (P/N 38897-PR7-A01AH or 38899-P13-A01) for refrigerant HFC-134a (R-134a) |
| P | Cooling System | Acura Long Life Antifreeze/coolant type2: P/N OL999-9011A |

**API CERTIFICATION SEAL**

**Required Engine Oil**
Engine oil viscosity for ambient temperature ranges

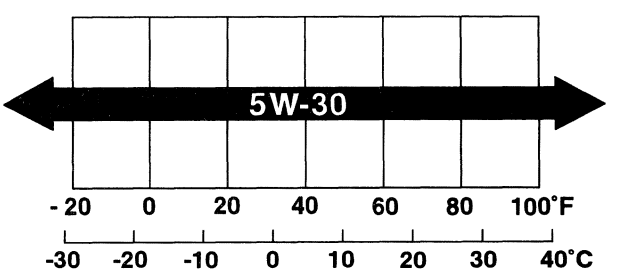




BACK

Protected by AR

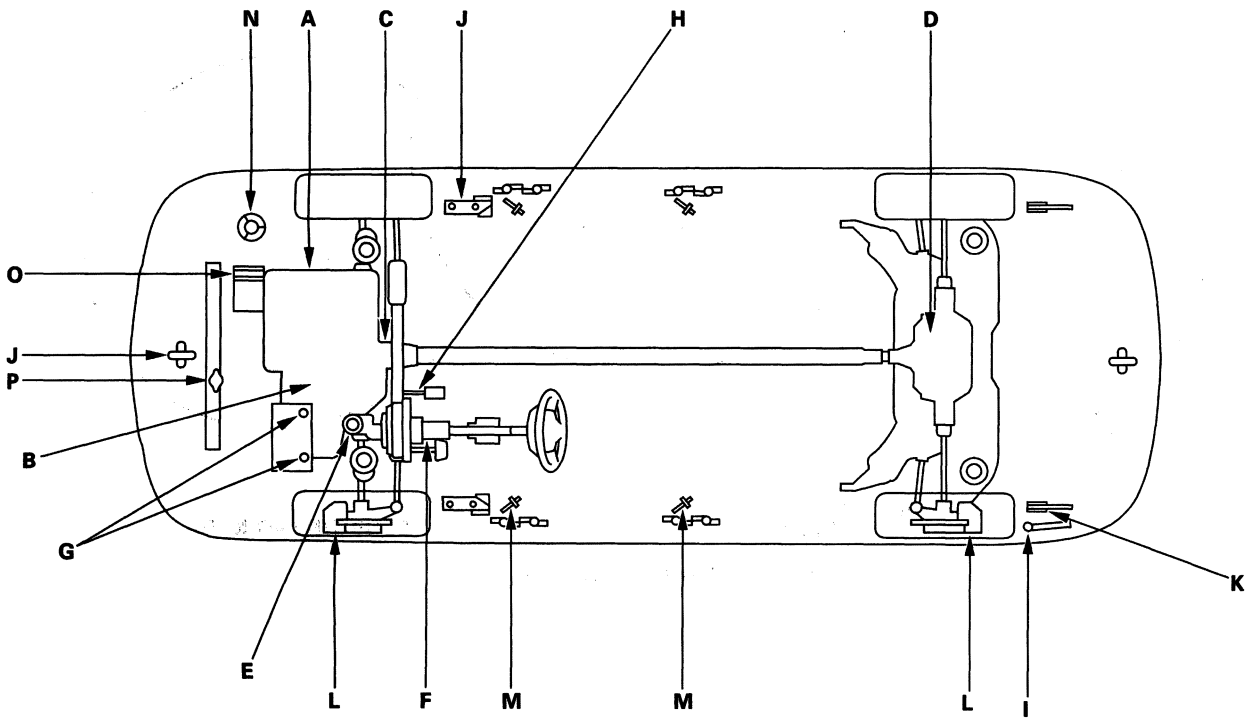

Protected by AR

# Maintenance Minder

## General Information (Information Display)

### Maintenance Display

The Maintenance Minder is an important feature of the information display (RDX model). The RDX's onboard computer (PCM) calculates the remaining engine oil and automatic transmission fluid life. The system also displays the code for other scheduled maintenance items needing service.

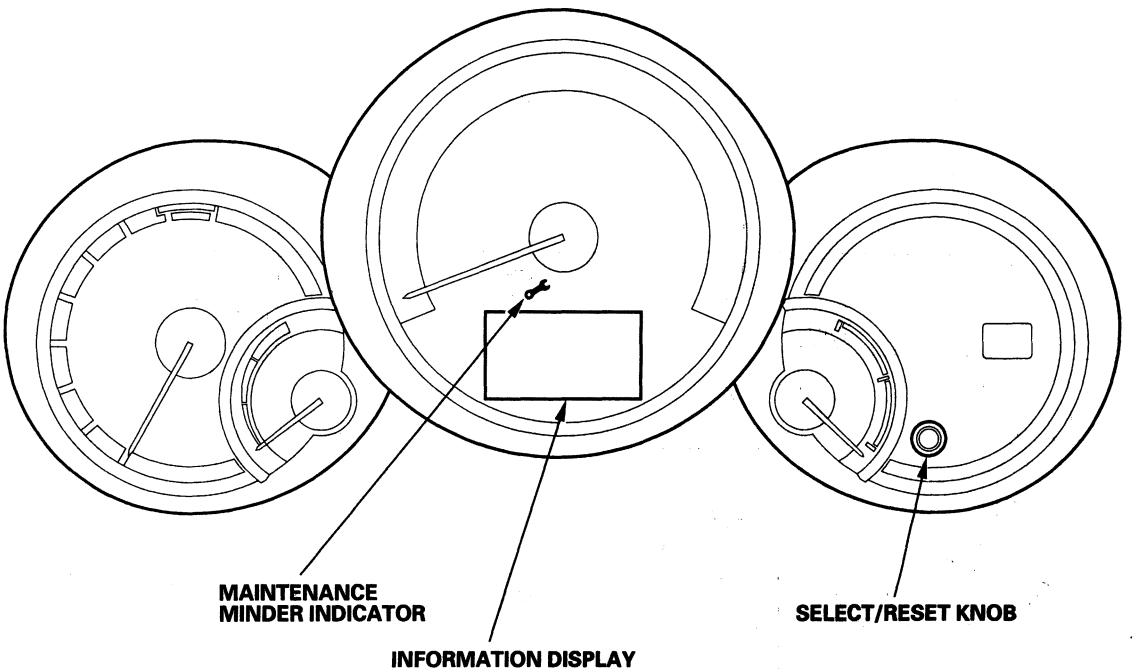




BACK

Protected by AR

## Service Information

1. The remaining engine oil life (A) is shown as a percentage in the information display.
   To see the current engine oil life, turn the ignition switch to the ON (II) position, then push and release the Select/Reset Knob repeatedly until the engine oil life displays.

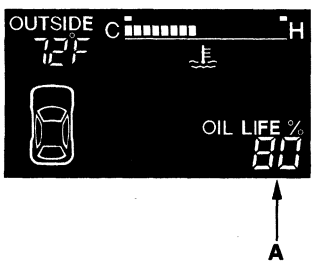


2. When the ignition switch is in the ON (II) position, and the remaining engine oil life (A) is 6 % to 15 %, the remaining engine oil life and other scheduled maintenance item(s) needing service are displayed. The maintenance minder indicator (B) also comes on when the engine oil life is 15 % or less.
   To cancel the display and the indicator, press the Select/Reset Knob.

   - Complete list of maintenance main items (C) (see page 3-10).
   - Complete list of maintenance sub items (D) (see page 3-11).

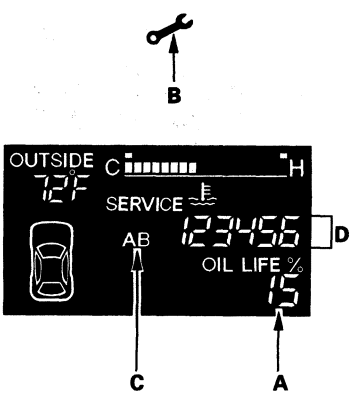


3. When the ignition switch is in the ON (II) position, and the remaining engine oil life is 1 % to 5 %, the message "SERVICE" (A) is displayed along with engine oil life and the same maintenance item code(s).

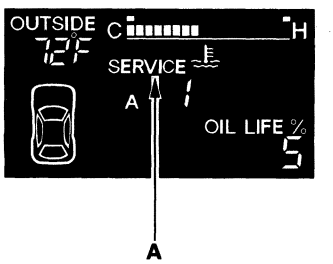


4. When the ignition switch is in the ON (II) position, and the remaining engine oil life is 0 %, the engine oil life indicator (A) blinks.
   Pressing the Select/Reset Knob cancels the display, but the maintenance minder indicator stays on.

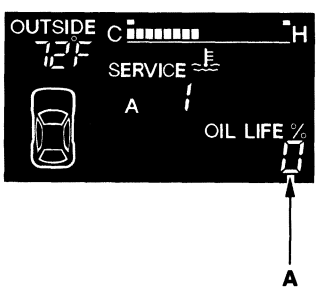


(cont'd)

Protected by AR



## General Information (Information Display) (cont'd)

5. If the indicated maintenance is not done, the engine oil life indicator shows a negative mileage, for example " —10," on the display.
   If The negative mileage is between 0 and —9, the indicator is displayed for only a few seconds when the iginition switch is turned to the ON (II) position. The negative mileage (A) remains displayed after the vehicle is driven more than 10 miles (for USA models) or 10 km (for Canada models) after 0 % oil life is reached, and the display cannot be cancelled. This means the indicated maintenance item(s) should have been done more than 10 miles (or 10 km) ago.

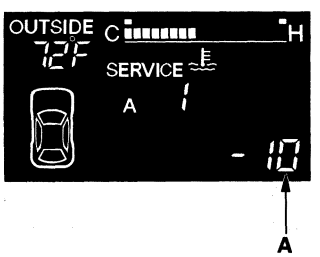


### Resetting the Maintenance Information Display

NOTE:
- The vehicle must be stopped to reset the display.
- If a required service is done and the display is not reset, or if the maintenance display is reset without doing the service, the system will not show the proper maintenance timing. This can lead to serious mechanical problems because there will be no accurate record of when the required maintenance is needed.
- The engine oil life and the maintenance items can be reset independently only with the HDS.

1. Turn the ignition switch ON (II) position.
2. Push and release the Select/Reset Knob repeatedly until the engine oil life indicator is displayed.
3. Press and hold the Select/Reset Knob for about 10 seconds. The engine oil life indicator and the maintenance item code(s) will blink.

   NOTE: If you are resetting the display when the engine oil life is more than 15 %, make sure the maintenance item(s) requiring service are done before resetting the display.
4. Press and hold the Select/Reset Knob for another 5 seconds. The maintenance item code(s) will disappear, and the engine oil life will reset to "100."

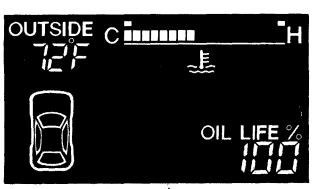




BACK

Protected by AR

# General Information (Multi-information Display)

## Maintenance Display

The Maintenance Minder is an important feature of the multi-information display (RDX with Technology Package). Based on engine operating conditions and accumulated engine revolutions, the RDX's onboard computer (PCM) calculates the remaining engine oil and automatic transmission fluid life. The system also displays the codes for other scheduled maintenance items needing service.

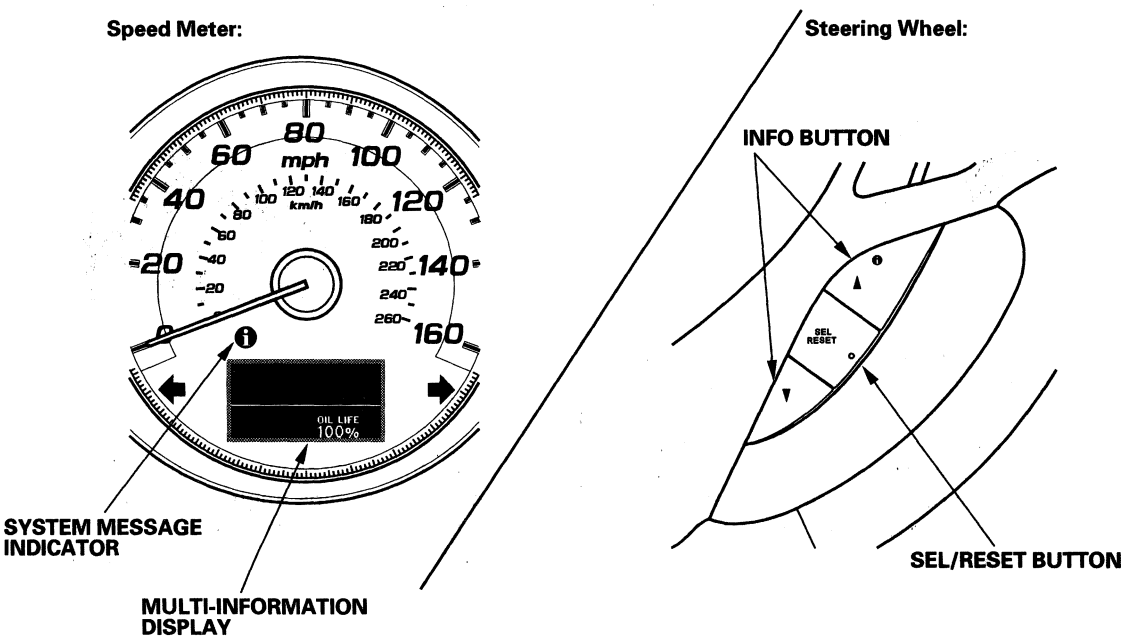


(cont'd)

Protected by AR



## General Information (Multi-information Display) (cont'd)

### Service Information

1. The remaining engine oil life (A) is shown as a percentage on the multi-information display.
   To see the current engine oil life, turn the ignition switch to the ON (II) position, then push and release the Sel/Reset Button repeatedly until the engine oil life displays.

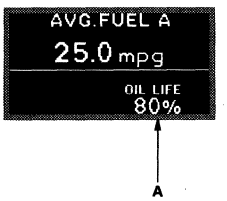


2. When the ignition switch is in the ON (II) position, and the remaining engine oil life is 6 % to 15 %, the remaining engine oil life and other scheduled maintenance item(s) needing service are displayed. The maintenance system message "SERVICE DUE SOON" (A) also come on. To cancel the message, press the Info Button. The display continues to show the remaining engine oil life (B) and the message indicator (C) until it is reset.

   - Complete list of maintenance main items (D) (see page 3-10).
   - Complete list of maintenance sub items (E) (see page 3-11).

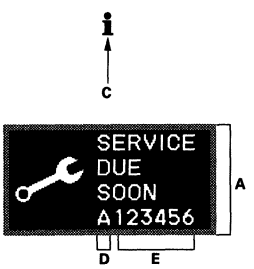


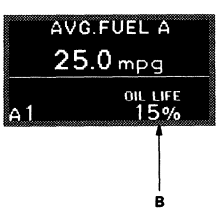


3. When the ignition switch is in the ON (II) position, and the remaining engine oil life is 1 % to 5 %, the maintenance system message "SERVICE DUE NOW" is displayed along with the same maintenance item code(s). If the maintenance system message display is cancelled, a "SERVICE" message appears.

4. When the ignition switch is in the ON (II) position, and the remaining engine oil life is 0 %, the maintenance system message "SERVICE PAST DUE" is displayed along with the same maintenance item code(s).

BACK

Protected by AR

5. If the indicated maintenance is not done, the "SERVICE PAST DUE" message shows a negative mileage, for example "—10," on the display. If the negative mileage is between 0 and —9, the message is displayed for only a few seconds when the ignition switch is turned to the ON (II) position. The negative mileage (A) remains displayed after the vehicle is driven more than 10 miles (for USA models) or 10 km (for Canada models) after 0 % oil life is reached, and the display cannot be cancelled. This means the indicated maintenance item(s) should have been done more than 10 miles (or 10 km) ago.

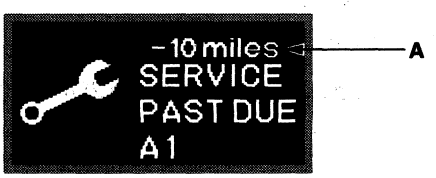


## Resetting the Maintenance-Information Display

NOTE:
- The vehicle must be stopped to reset the display.
- If a required service is done and the display is not reset, or if the maintenance display is reset without doing the service, the system will not show the proper maintenance timing. This can lead to serious mechanical problems because there will be no accurate record of when the required maintenance is needed.
- The engine oil life and the maintenance items can be reset independently only with the HDS.

1. Turn the ignition switch to ON (II) position.

2. If system message(s) are displayed, press the Info Button to cancel the display.

3. Push and release the Sel/Reset Button repeatedly until the engine oil life indicator is displayed.

4. Press and hold the Sel/Reset Button for about 10 seconds, the "OIL LIFE RESET" mode display appears.

   NOTE:
   - If you are resetting the display when the engine oil life is more than 15 %, make sure any maintenance item(s) requiring service are done before resetting the display.
   - To cancel the "OIL LIFE RESET" mode, press the Info Button repeatedly until the "CANCEL" indicator displayed, then press the Sel/Reset Button.

5. Press Info Button repeatedly until the "RESET" indicator is displayed, then press the Sel/Reset Button.
   The maintenance item code(s) will disappear, and the engine oil life will reset to"100."

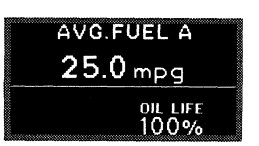

Protected by AR



## Maintenance Main Items

If the message "SERVICE" or "SERVICE DUE NOW"does not appear more than 12 months after the display is reset, change the engine oil every year.

NOTE:
- Replace the brake fluid every 3 years. Independent of the maintenance messages in the information display.
- Inspect idle speed every 160,000 miles (256,000 km).
- Adjust the valves during services A, B, 1, 2 or 3, only if they are noisy.

| Symbol | Maintenance Main Items |
|---|---|
| A | Replace engine oil (see page 8-9).<br>Engine oil capacity without oil filter: 4.5 L (4.8 US qt). |
| B | Replace engine oil and oil filter (see page 8-10).<br>Engine oil capacity with oil filter: 4.7 L (5.0 US qt). |
| | Check front and rear brakes (see page 19-4).<br>• Check pads and discs for wear (thickness), damage, and cracks.<br>• Check calipers for damage, leaks, and tightness of mounting bolts. |
| | Check parking brake adjustment (see page 19-7).<br>Check the number of clicks (6 to 7) when the parking brake pedal is pressed with 294 N (30 kgf, 66 lbf) of force. |
| | Inspect tie-rod ends, steering gearbox, and gearbox boots (see page 17-8).<br>• Check rack grease and steering linkage.<br>• Check boots for damage or leaking grease.<br>• Check fluid lines for damage or leaks. |
| | Inspect suspension components (see page 18-3).<br>• Check bolts for tightness.<br>• Check condition of ball joint boots for deterioration and damage. |
| | Inspect driveshaft boots (see page 16-4).<br>Check boots for cracks and boot bands for tightness. |
| | Inspect brake hoses and lines including VSA (see page 19-36).<br>Check the master cylinder and VSA modulator-control unit for damage and leakage. |
| | Inspect all fluid levels and condition of fluids.<br>• Engine coolant (see page 10-7).<br>• Automatic transmission fluid (ATF-Z1) (see page 14-238).<br>• Rear differential fluid (ATF-Z1) (see page 15-69).<br>• Transfer fluid (see page 14-241).<br>• Power steering fluid (see page 17-12).<br>• Brake fluid (see page 19-11).<br>• Windshield washer fluid. |
| | Inspect exhaust system* (see page 9-23).<br>Check catalytic converter heat shields, exhaust pipes, and muffler for damage, leaks, and tightness. |
| | Inspect fuel lines* (see page 11-368) and connections* (see page 11-370).<br>Check for loose connections, cracks, and deterioration; retighten loose connections and replace damaged parts. |

NOTE: According to state and federal regulations, failure to do the maintenance items marked with an asterisk ( * ) will not void the customer's emissions warranties. However, Acura recommends that all maintenance services be done at the recommended interval, to ensure long-term reliability.



BACK

Protected by AR

## Maintenance Sub Items

| Number | Maintenance Sub Items |
|---|---|
| 1 | Rotate tires, and check tire inflation and condition.<br>Follow the pattern shown in the Owner's Manual. |
| 2 | Replace air cleaner element (see page 11-395).<br>If the vehicle is regularly driven in dusty conditions, replace the element every 15,000 miles (24,000 km). |
| | Replace dust and pollen filter (see page 21-87).<br>• Replace the filter at 15,000 miles (24,000 km) intervals if the vehicle is driven mostly in urban areas that have high concentrations of soot in the air from industry and diesel-powered vehicles.<br>• Replace the filter whenever airflow from the heating and cooling system is less than normal. |
| | Inspect drive belt (see page 4-31).<br>Look for cracks and damage, then check the position of the drive belt auto-tensioner indicator. |
| 3 | Replace automatic transmission fluid (see page 14-239) and transfer (see page 14-241) fluid.<br>• Driving in mountainous areas at very low vehicle speeds or trailer towing results in higher transmission and transfer fluid temperatures. This requires transmission fluid changes more frequently than recommended by the Maintenance Minder. If the vehicle is regularly driven in these conditions, change the transmission and transfer fluid at 60,000 miles (100,000 km), then every 30,000 miles (48,000 km).<br>• Automatic transmission fluid capacity 3.3 L (3.5 US qt), use Acura automatic transmission fluid (ATF-Z1).<br>• Transfer fluid capacity: 0.43 L (0.45 US qt), use Hypoid Gear Oil GL4 or GL5. |
| 4 | Replace spark plugs (see page 4-22).<br>Use SILKR8A-S (NGK) |
| | Inspect the valve clearance (cold) (see page 6-9).<br>Intake: 0.21—0.25 mm (0.008—0.010 in.), Exhaust: 0.28—0.32 mm (0.011—0.013 in.). |
| 5 | Replace engine coolant (see page 10-7).<br>Capacity (including the reservoir): 6.5 L (1.72 US gal), use Acura Long Life Antifreeze/Coolant Type 2. |
| 6 | Replace rear differential fluid (see page 15-69).<br>• Driving in mountainous areas at very low speeds, towing a trailer, or frequently driving fully loaded results in a higher level of mechanical (shear) stress to fluid. This requires differential fluid changes more frequently than recommended by the Maintenance Minder. If the vehicle is regularly driven under these conditions, change the differential fluid at 7,500 miles (12,000 km), then every 15,000 miles (24,000 km).<br>• Capacity: 2.53 L (2.67 US qt), use Acura automatic transmission fluid (ATF-Z1) |

Protected by AR

## SUPPLEMENTAL RESTRAINT SYSTEM (SRS) (If engine electrical maintenance is required)

The RDX SRS includes a driver's airbag in the steering wheel hub, a passenger's airbag in the dashboard above the glove box, seat belt tensioners in the front seat belt retractors, driver's seat belt buckle tensioner in the driver's seat belt lower anchor, front passenger's seat belt buckle tensioners in the front passenger's seat belt lower anchor, side curtain airbags in the sides of the roof, and side airbags in the front seat-backs. Information necessary to safely service the SRS is included in this Service Manual. Items marked with an asterisk ( * ) on the contents page include or are located near SRS components. Servicing, disassembling, or replacing these items require special precautions and tools, and should be done only by an authorized Acura dealer.

- To avoid rendering the SRS inoperative, which could lead to personal injury or death in the event of a severe frontal or side collision, all SRS service work must be performed by an authorized Acura dealer.
- Improper service procedures, including incorrect removal and installation of the SRS, could lead to personal injury caused by unintentional deployment of the airbags and/or side airbags.
- Do not bump or impact the SRS unit, front impact sensors, or side impact sensors when the ignition switch is ON (II), or for at least 3 minutes after the ignition switch is turned OFF; otherwise, the system may fail in a collision, or the airbags may deploy.
- SRS electrical connectors are identified by yellow color coding. Related components are located in the steering column, front console, dashboard, dashboard lower panel, in the dashboard above the glove box, in the front seats, in the roof side, and around the floor. Do not use electrical test equipment on these circuits.

BACK

Protected by AR

# Engine Electrical


## Engine Electrical
Special Tools ..... 4-2

## Starting System
Component Location Index .... 4-3
Symptom Troubleshooting Index ..... 4-4
Circuit Diagram ..... 4-5
Starter Circuit Troubleshooting ..... 4-6
Starter Performance Test ..... 4-8
Starter Removal and Installation ..... 4-9
Starter Overhaul ..... 4-12

## Ignition System
Component Location Index .... 4-17
Circuit Diagram ..... 4-18
Ignition Timing Inspection ..... 4-19
Ignition Coil Removal/ Installation ..... 4-20
Ignition Coil Relay Circuit Troubleshooting ..... 4-20
Spark Plug Inspection ..... 4-22

## Charging System
Component Location Index .... 4-23
Symptom Troubleshooting Index ..... 4-24
Circuit Diagram ..... 4-25
Charging System Indicator Circuit Troubleshooting ..... 4-26
Alternator and Regulator Circuit Troubleshooting ..... 4-28
Alternator Control Circuit Troubleshooting ..... 4-29
Drive Belt Inspection ..... 4-31
Drive Belt Removal/ Installation ..... 4-31
Drive Belt Auto-tensioner Inspection ..... 4-32
Drive Belt Auto-tensioner Removal/Installation ..... 4-33
Tensioner Pulley Replacement ..... 4-33
Alternator Removal and Installation ..... 4-34
Alternator Overhaul ..... 4-37

## Cruise Control
Component Location Index .... 4-42
Symptom Troubleshooting Index ..... 4-43
Circuit Diagram ..... 4-45
Cruise Control Input Test ..... 4-46
* Cruise Control Combination Switch Test/Replacement .... 4-48

Protected by AR



## Special Tools

| Ref. No. | Tool Number | Description | Qty |
|---|---|---|---|
| ① | 07746-0010300 | Attachment, 42 x 47 mm | 1 |
| ② | 07749-0010000 | Driver | 1 |

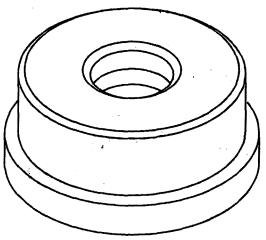

①

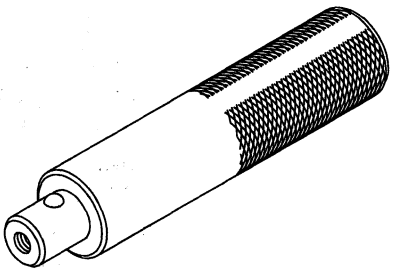

②



BACK

Protected by AR



## Component Location Index

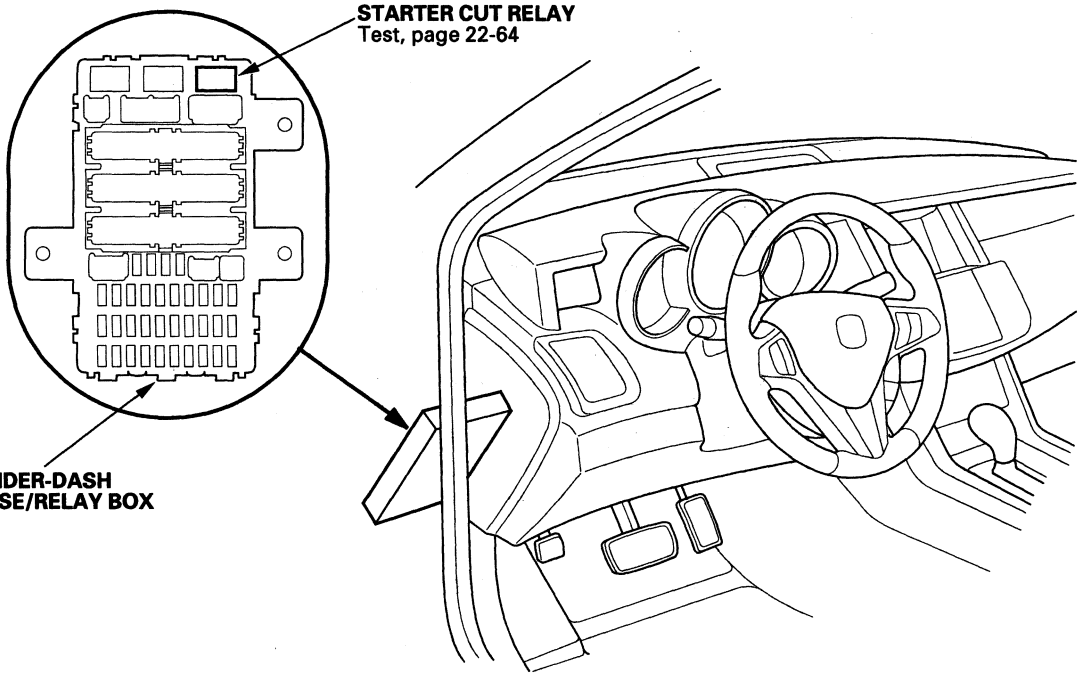


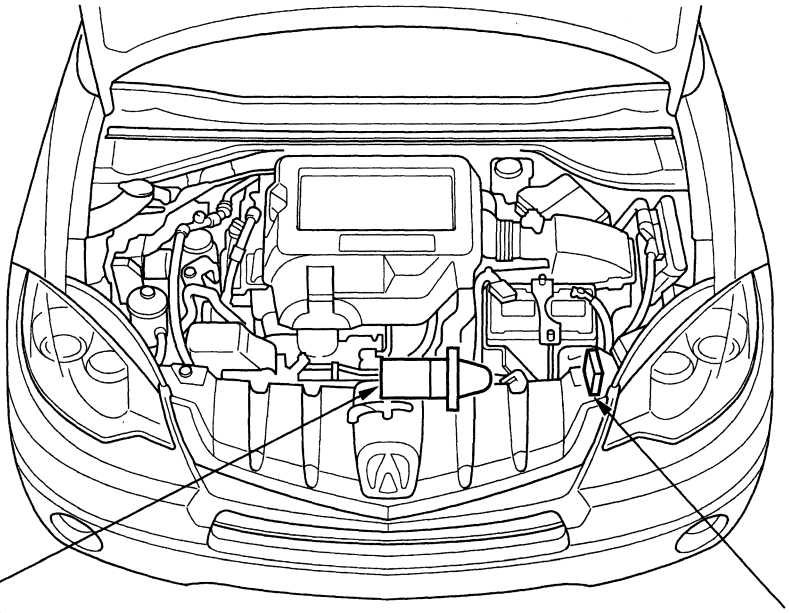

**STARTER**
Starter Circuit Troubleshooting, page 4-6
Performance Test, page 4-8
Removal/Installation, page 4-9
Overhaul, page 4-12

**TRANSMISSION RANGE SWITCH**
Test, page 14-290
Replacement, page 14-292

Protected by AR



## Symptom Troubleshooting Index

| Symptom | Diagnostic procedure | Also check for |
|---|---|---|
| Engine does not start (does not crank) | 1. Check for loose battery terminals or connections.<br>2. Test the battery for a low charge (see page 22-63).<br>3. Check the starter (see page 4-6).<br>4. Check the starter cut relay (see page 22-64).<br>5. Check the transmission range switch (see page 14-290).<br>6. Check the ignition switch or wire (see page 22-66). | Poor ground at G101 |
| Engine cranks, but does not start | 1. Check for PGM-FI DTCs (see page 11-3).<br>2. Check PGM-FI main relays (see page 22-64).<br>3. Check for IMMOBI status and function (see page 22-333).<br>4. Check the fuel pressure (see page 11-365).<br>5. Check for a plugged or damaged fuel line (see page 11-368).<br>6. Check for a plugged fuel filter (see page 11-382).<br>7. Check the throttle body (see page 11-393).<br>8. Check for low engine compression (see page 6-6).<br>9. Check for a damage or broken cam chain. | |
| Engine is hard to start | 1. Check for PGM-FI DTCs (see page 11-3).<br>2. Check for IMMOBI status and function (see page 22-333).<br>3. Check the fuel pressure (see page 11-365).<br>4. Check for a plugged or damaged fuel line (see page 11-368).<br>5. Check for a plugged fuel filter (see page 11-382). | |
| Engine cranks slowly | 1. Check for loose battery terminals or connections.<br>2. Test the battery for a low charge (see page 22-63).<br>3. Check the starter for binding (see page 4-12).<br>4. Check for excessive drag in the engine. | |



BACK

Protected by AR



## Circuit Diagram

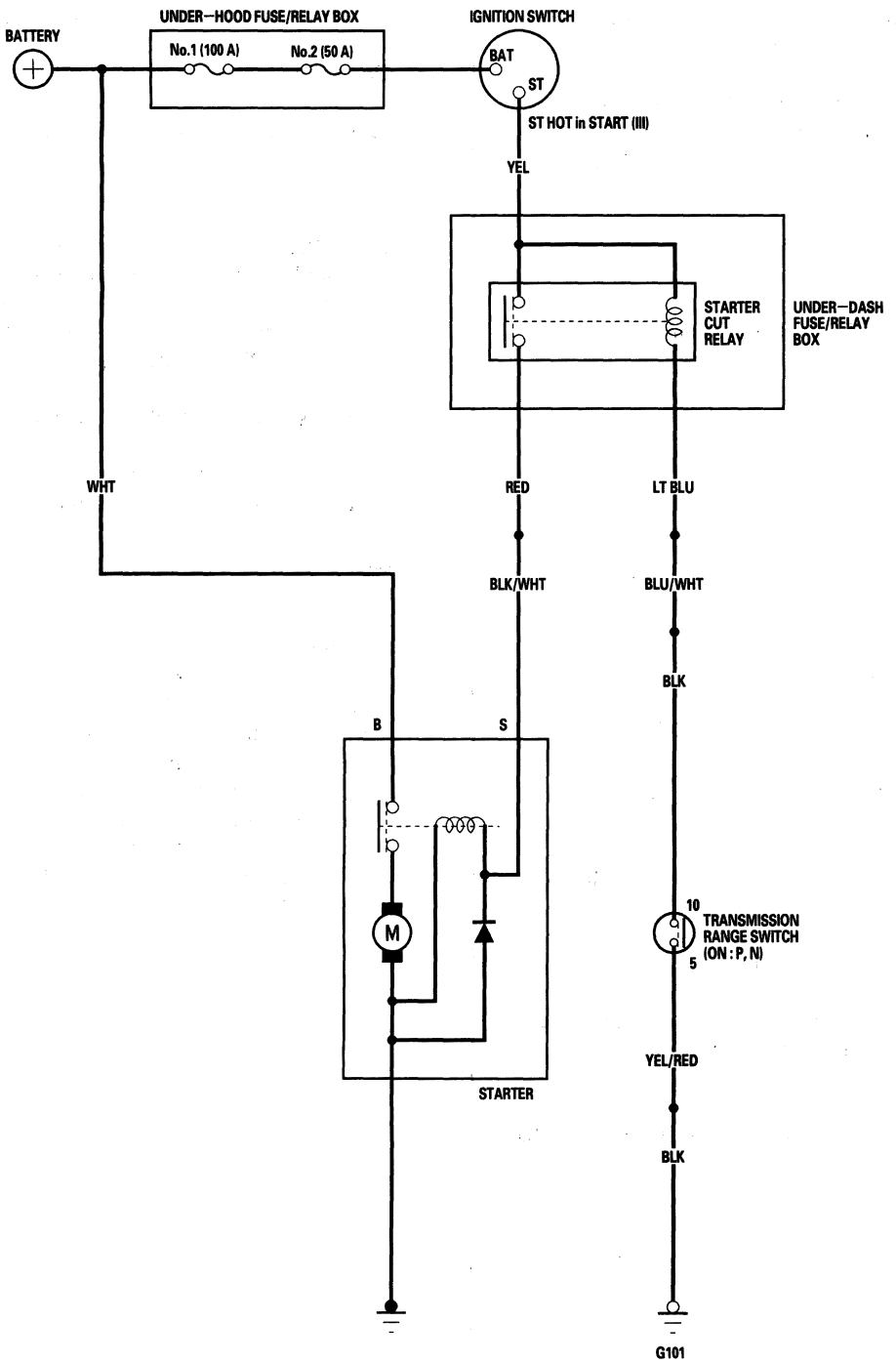

Protected by AR



## Starter Circuit Troubleshooting

NOTE:
- Air temperature must be between 59 and 100 °F (15 and 38 °C) during this procedure.
- After this inspection, you must reset the powertrain control module (PCM), otherwise the PCM will continue to stop the fuel injectors from functions.
- The battery must be in good condition and fully charged.

1. Hook up the following equipment:

   - Ammeter, 0—400 A
   - Voltmeter, 0—20 V (accurate within 0.1 V)

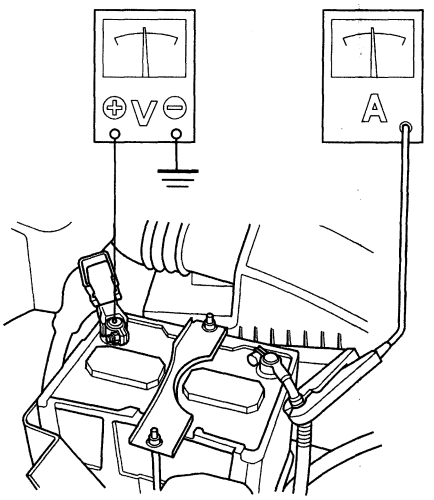


2. Connect the HDS to the data link connector (DLC) (see step 2 on page 11-3).

3. Turn the ignition switch ON (II).

4. Make sure the HDS communicates with the vehicle and the PCM. If it doesn't, troubleshoot the DLC circuit (see page 11-229).

5. Select PGM-FI, INSPECTION, then ALL INJECTORS OFF on the HDS.

6. Set the parking brake, then with the shift lever in P or N position, turn the ignition switch to START (III).

   *Does the starter crank the engine normally?*

   **YES**—The starting system is OK. Go to step 13.

   **NO**—Go to step 7.

7. Check the battery condition (see page 22-63). Check electrical connections at the battery, the negative battery cable to body, the engine ground cables, and the starter for looseness and corrosion. Then try cranking the engine again.

   *Does the starter crank the engine?*

   **YES**—Repairing the loose connection corrected the problem. The starting system is OK. Go to step 13.

   **NO**—Check the following:

   - If the starter will not crank the engine at all, go to step 8.
   - If the starter cranks the engine erratically or too slowly, go to step 10.
   - If the starter does not disengage from the torque converter ring gear when you release the key, replace the starter, or remove and disassemble it and check for the following:
     – Solenoid plunger and switch malfunction
     – Dirty drive gear or damaged overrunning clutch



BACK

Protected by AR



8. Make sure the transmission is in Park or neutral, and set the parking brake. Disconnect the connector from the starter solenoid S terminal. Connect a jumper wire from the battery positive terminal to the solenoid terminal.

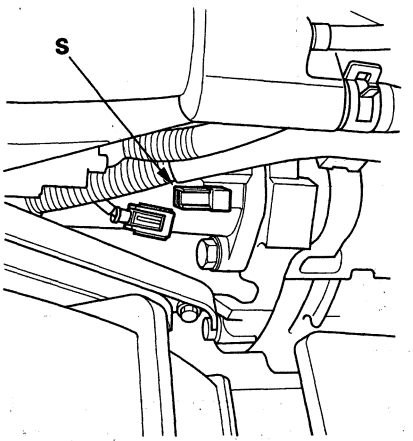


*Does the starter crank the engine?*

**YES**—Go to step 9.

**NO**—Remove the starter, and repair or replace as necessary. ■

9. Check the following items in the order listed until you find the open circuit:

   - The YEL wire and connectors between the under-dash fuse/relay box and the ignition switch.
   - The RED and BLK/WHT wire and connectors between the under-dash fuse/relay box and the starter.
   - The ignition switch (see page 22-66).
   - The transmission range switch and connector.
   - The starter cut relay (see page 22-64).

10. While cranking the engine, check the cranking voltage and the current draw.

    *Is the cranking voltage greater than or equal to 8.5 V and is the current draw less than or equal to 380 A?*

    **YES**—Go to step 11.

    **NO**—Replace the starter, or remove and disassemble it, and check the following:

    - Drag in the starter armature
    - Shorted armature winding
    - Excessive drag in the engine

11. Check the engine speed while cranking the engine.

    *Is the engine speed above 100 rpm?*

    **YES**—Go to step 12.

    **NO**—Replace the starter, or remove and disassemble it, and check the following:

    - Open circuit in the starter armature commutator segments
    - Excessively worn starter brushes
    - Open circuit in the commutator brushes
    - Dirty or damaged helical splines or drive gear
    - Faulty drive gear clutch

12. Remove the starter, and inspect its drive gear and the torque converter ring gear for damage. Replace any damaged parts.

13. Select PCM reset (see page 11-4) to cancel ALL INJECTORS OFF on the HDS.

Protected by AR



## Starter Performance Test

1. Connect the battery to the starter for this test using the thickest (gauge) wire possible (preferably the same gauge as used on the vehicle).

   NOTE: To avoid damaging the starter, never leave the battery connected for more than 10 seconds.

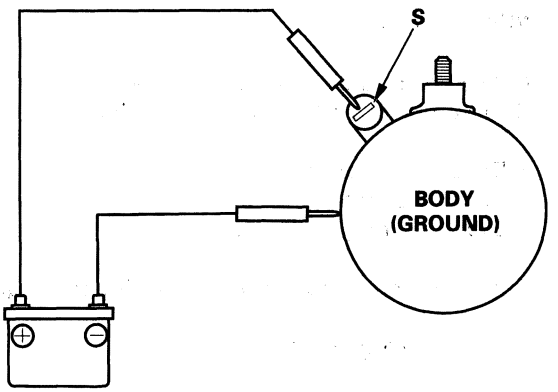


2. Connect the battery as shown. If the starter pinion moves out, it is working properly.

3. Disconnect the battery from the body. If the pinion retracts immediately, it is working properly.

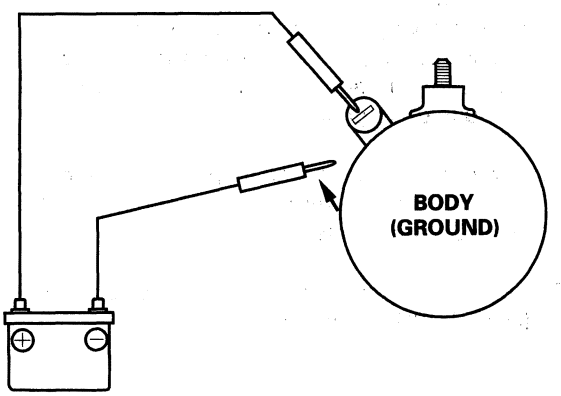


4. Firmly clamp the starter in a vise.

5. Connect the starter to the battery as shown, and check that the motor turns and keeps rotating.

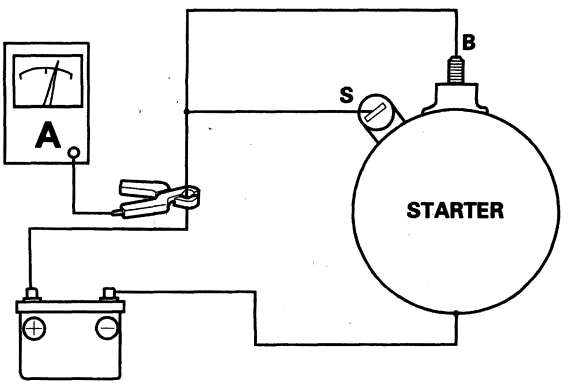


6. If the electric current meets the specification when the battery voltage is at 11.5 V, the starter is working properly.

   **Specification**
   **Electric Current: 80 A or less**



BACK

Protected by AR



# Starter Removal and Installation

## Removal

1. Make sure you have the anti-theft code for the audio system and the navigation system (if equipped), then write down the audio presets.

2. Disconnect the negative cable from the battery first, then disconnect the positive cable.

3. Remove the clip (A), then remove the coolant reservoir (B) from the holder.

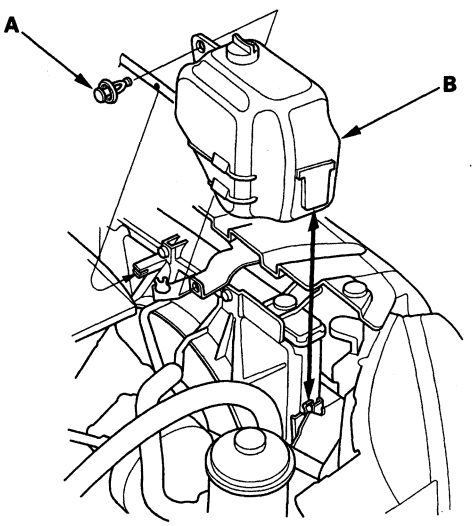


4. Remove the clips (A), then remove the support rod clamp bracket (B).

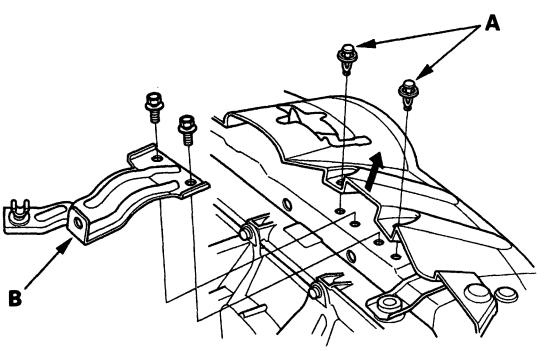


5. Disconnect the A/C condenser fan motor connector (A), then remove the A/C condenser fan shroud assembly (B).

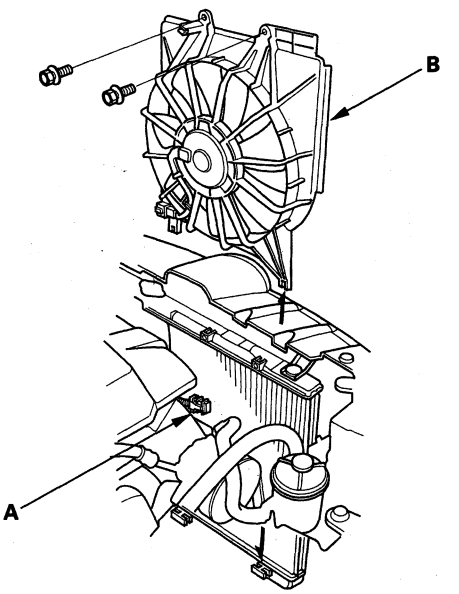


6. Remove the harness clamp (A) and connector (B), then remove the intake manifold bracket (C).

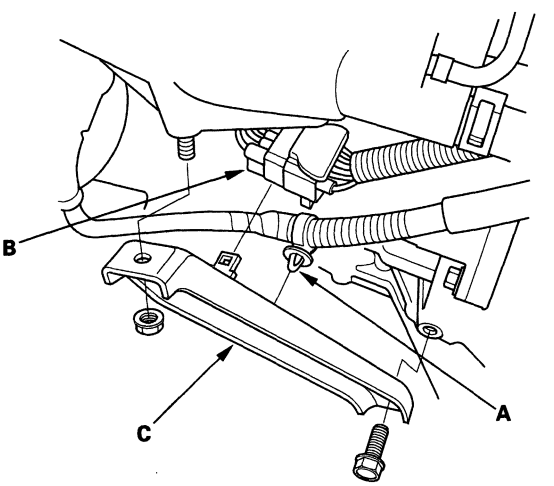


(cont'd)

Protected by AR



## Starter Removal and Installation (cont'd)

7. Disconnect the starter cable (A) from the B terminal, then disconnect the connector (B) from the S terminal.

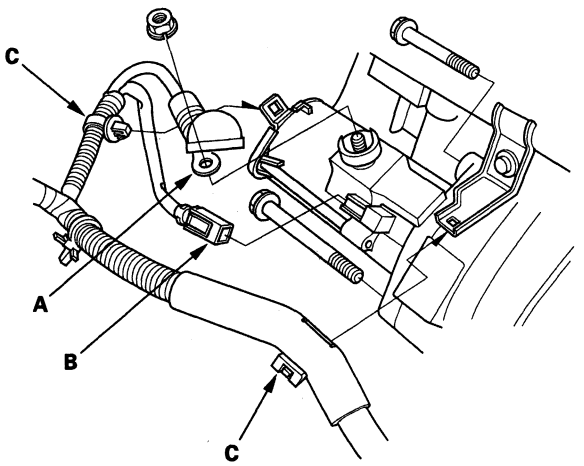


8. Remove the harness clamps (C), then remove the starter.

### Installation

1. Install the starter, then install the starter cable (A) and connector (B). Make sure the starter cable crimped side of the ring terminal is facing out.

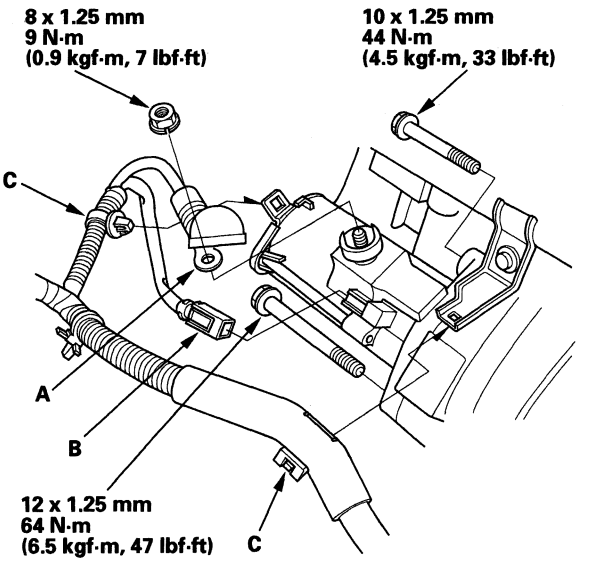


2. Install the harness clamps (C).

3. Install the intake manifold bracket (A), then install the harness clamp (B) and connector (C).

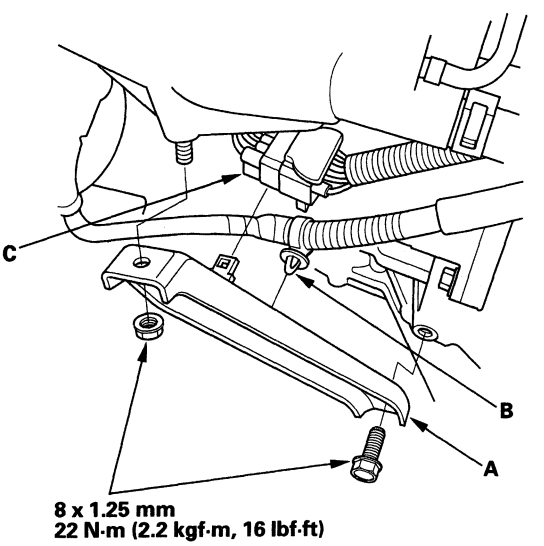




BACK

Protected by AR



4. Install the A/C condenser fan shroud assembly (A), then connect the A/C condenser fan motor connector (B).

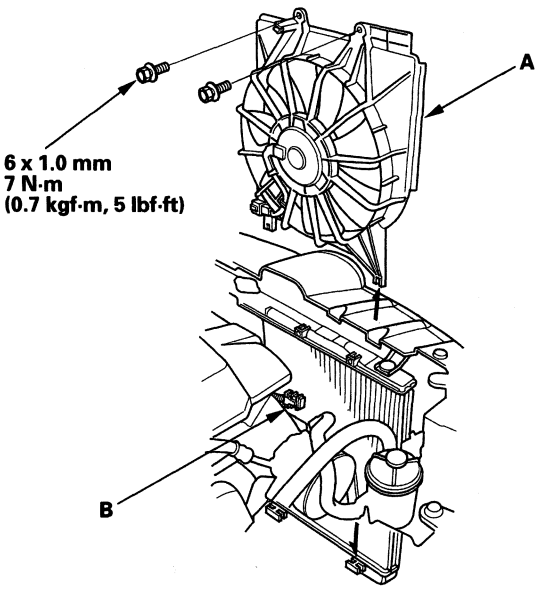


5. Install the support rod clamp bracket (A), then install the clips (B).

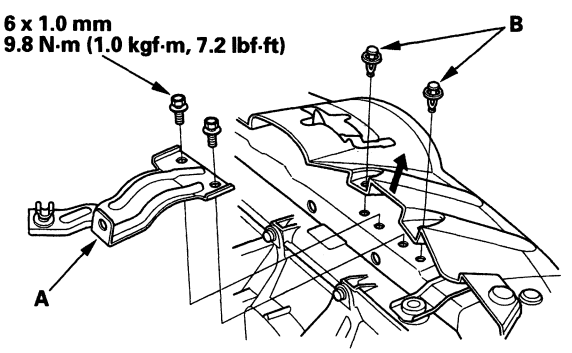


6. Install the coolant reservoir.

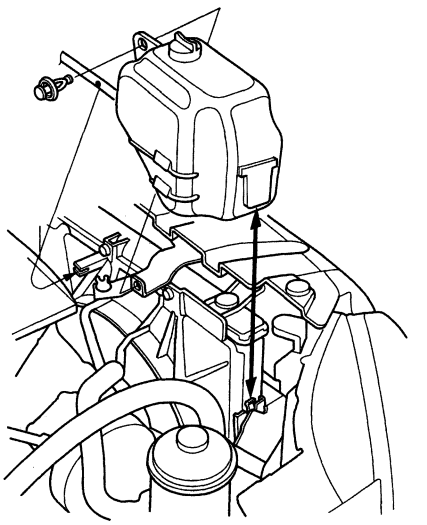

7. Connect the positive cable to the battery first, then connect the negative cable.

8. Start the engine to make sure the starter works properly.

9. Enter the anti-theft code for the audio system and the navigation system (if equipped), then enter the audio presets.

10. Set the clock.

Protected by AR



## Starter Overhaul

### Disassembly/Reassembly

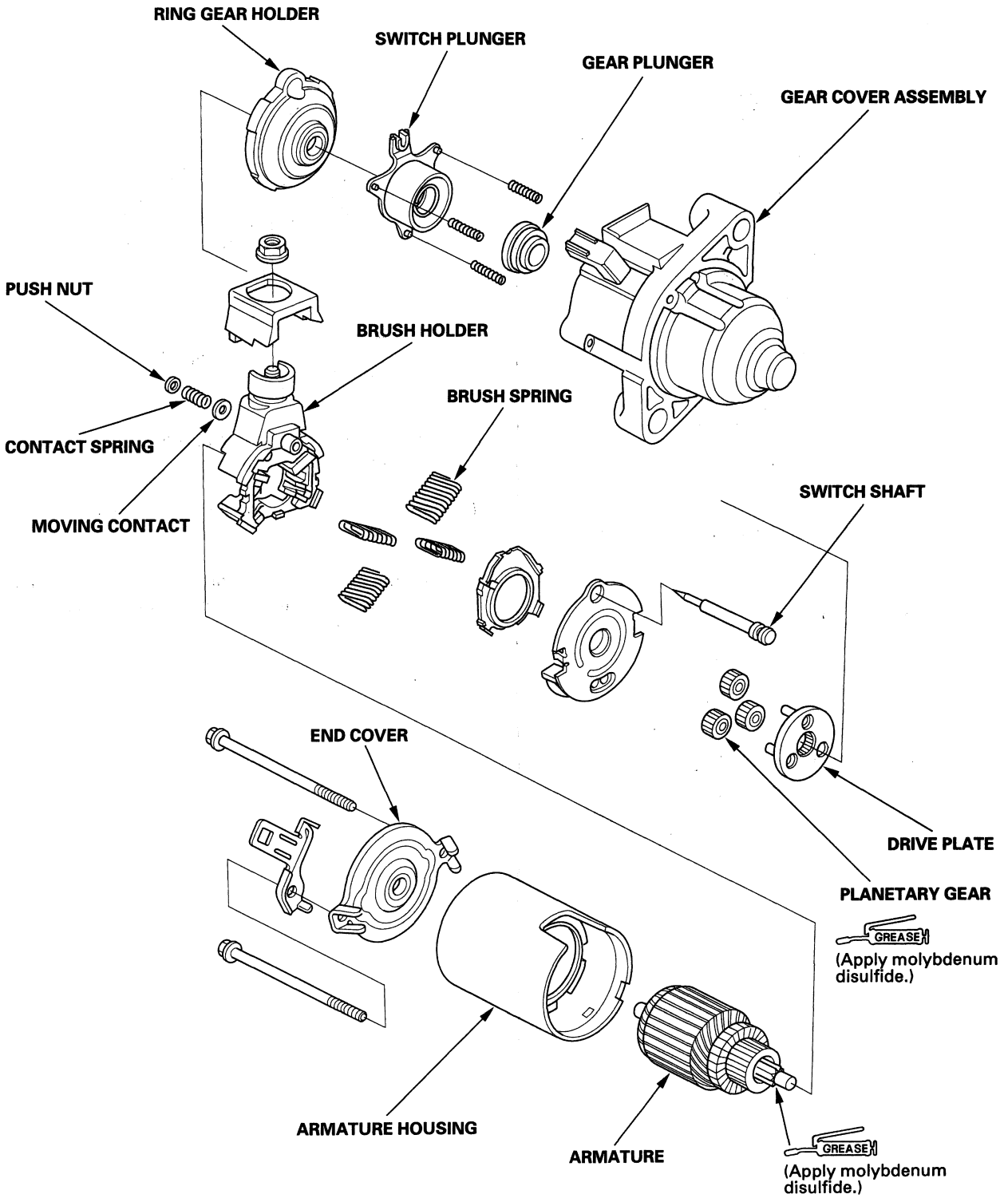




BACK

Protected by AR



**Armature Inspection and Test**

1. Remove the starter (see page 4-9).

2. Disassemble the starter as shown at the beginning of this procedure.

3. Inspect the armature for wear or damage from contact with the permanent magnet. If there is wear or damage, replace the armature.

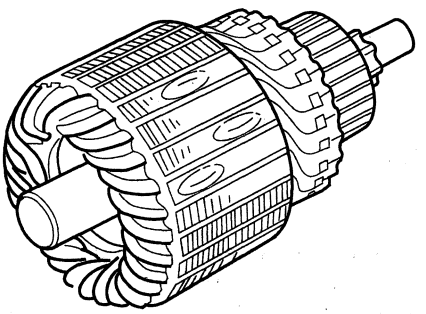

4. Check the commutator (A) surface. If the surface is dirty or burnt, resurface it with an emery cloth or a lathe to the following specifications, or recondition with #500 or #600 sandpaper (B).

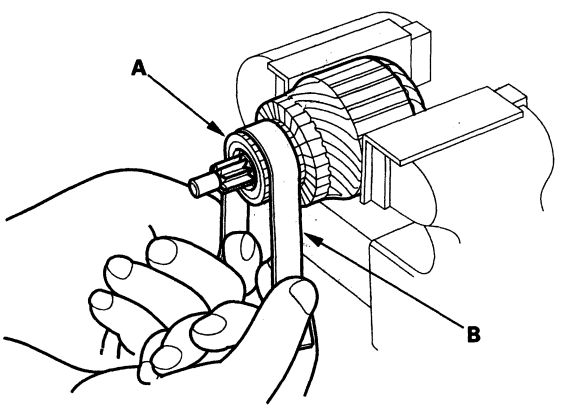


5. Check the commutator diameter. If the diameter is below the service limit, replace the armature.

**Commutator Diameter**
**Standard (New): 28.0—28.1 mm (1.102—1.106 in.)**
**Service Limit: 27.5 mm (1.083 in.)**

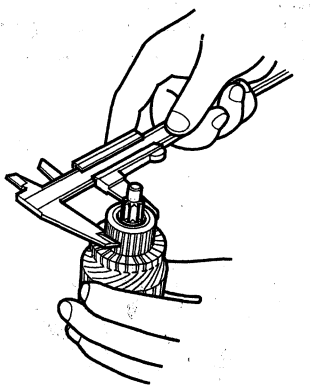

6. Measure the commutator (A) runout.

   - If the commutator runout is within the service limit, check the commutator for carbon dust or brass chips between the segments.
   - If the commutator runout is not within the service limit, replace the armature.

**Commutator Runout**
**Standard (New): 0.02 mm (0.001 in.) max.**
**Service Limit: 0.05 mm (0.002 in.)**

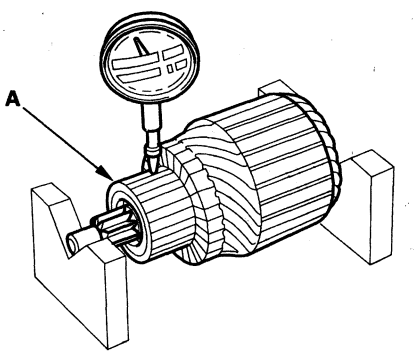


(cont'd)

Protected by AR



## Starter Overhaul (cont'd)

7. Check the mica depth (A). If the mica is too high (B), undercut the mica with a hacksaw blade to the proper depth. Cut away all the mica (C) between the commutator segments. The undercut should not be too shallow, too narrow, or V-shaped (D).

   **Commutator Mica Depth**
   **Standard (New): 0.40—0.50 mm (0.016—0.020 in.)**
   **Service Limit: 0.15 mm (0.006 in.)**

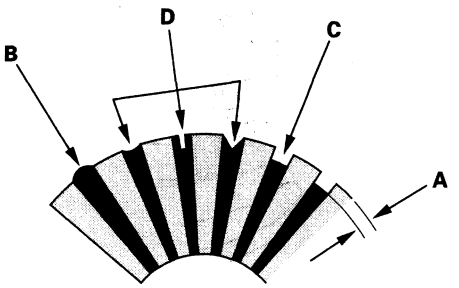


8. Check for continuity between the segments of the commutator. If there is an open circuit between any of the segments, replace the armature.

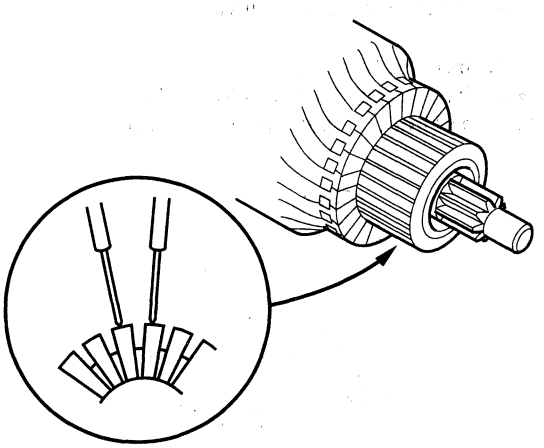

9. Place the armature (A) on an armature tester (B). Hold a hacksaw blade (C) on the armature core. If the blade is attracted to the core or vibrates while the core is turned, the armature is shorted. Replace the armature.

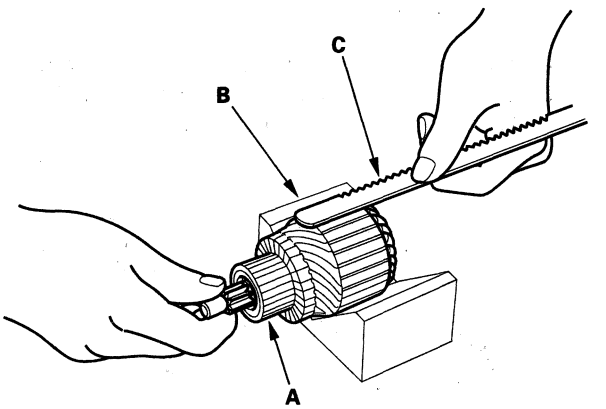


10. Check with an ohmmeter for continuity between the commutator (A) and armature coil core (B), and between the commutator and armature shaft (C). If there is continuity, replace the armature.

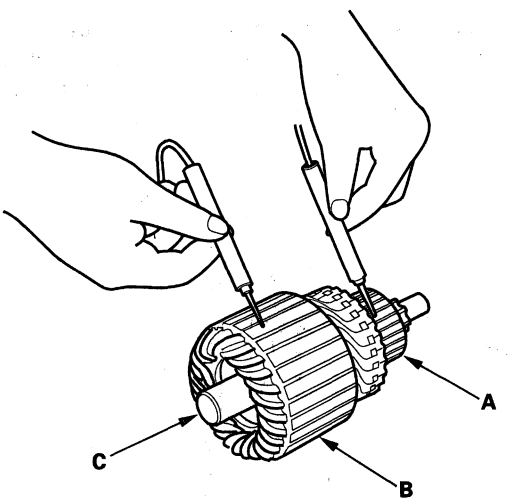




BACK

Protected by AR



**Starter Brush Inspection**

11. Measure the brush length. If it is shorter than the service limit, replace the brush holder assembly.

    **Brush Length**
    **Standard (New): 11.1—11.5 mm (0.44—0.45 in.)**
    **Service Limit: 4.3 mm (0.17 in.)**

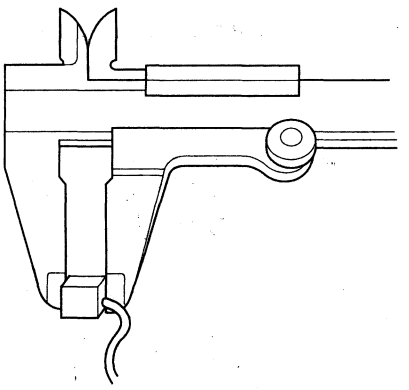

**Starter Brush Holder Test**

12. Check for continuity between the (+) brush (A) and (—) brush (B). If there is continuity, replace the brush holder assembly.

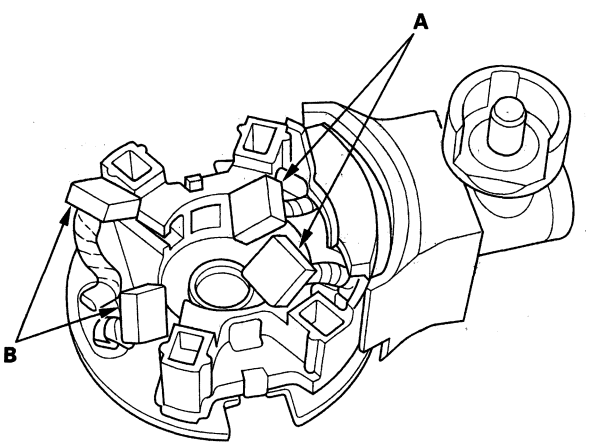


**Planetary Gear Inspection**

13. Check the planetary gears (A) and ring gear (B). Replace them if they are worn or damaged.

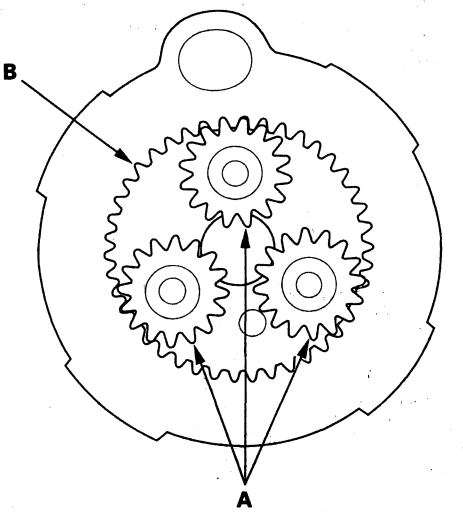


(cont'd)

Protected by AR



## Starter Overhaul (cont'd)

### Overrunning Clutch Inspection

14. While holding the drive gear (A), turn the gear shaft (B) counterclockwise. Check that the drive gear comes out to the other end. If the drive gear does not move smoothly, replace the gear cover assembly.

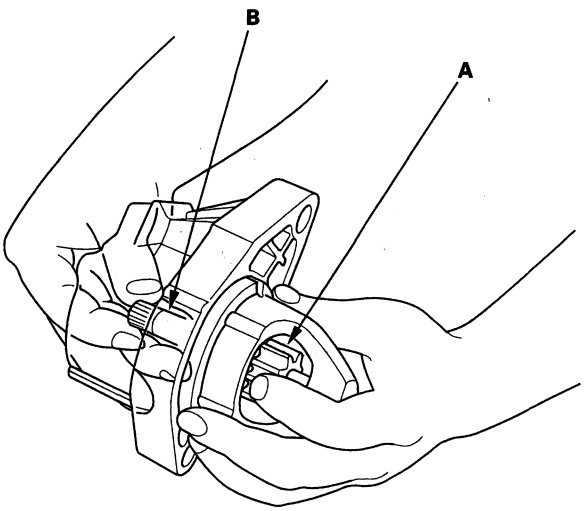


15. While holding the drive gear, turn the gear shaft clockwise. The gear shaft should turn freely. If the gear shaft does not turn freely, replace the gear cover assembly.

16. If the starter drive gear is worn or damaged, replace the overrunning clutch assembly; the gear is not available separately.
Check the condition of the torque converter ring gear to see if the starter drive gear teeth are damaged.

### Starter Reassembly

17. Install the brush into the brush holder, and set the armature (A) in the brush holder (B).

NOTE: To seat the new brushes, slip a strip of #500 or #600 sandpaper, with the grit side up, between the commutator and each brush, and smoothly turn the armature. The contact surface of the brushes will be sanded to the same contour as the commutator.

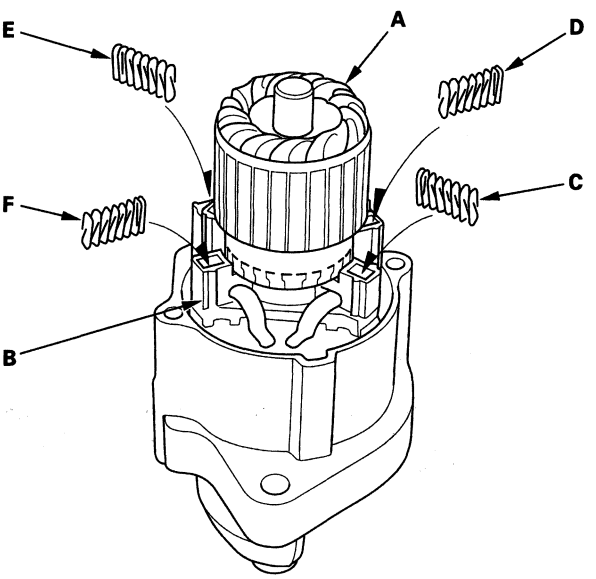


18. While squeezing a spring (C), insert it in the hole on the brush holder, and push it until it bottoms. Repeat this for the other three springs (D, E, and F).

19. Install the armature and brush holder assembly into the housing.

NOTE: Make sure the armature stays in the holder.



BACK

Protected by AR



## Component Location Index

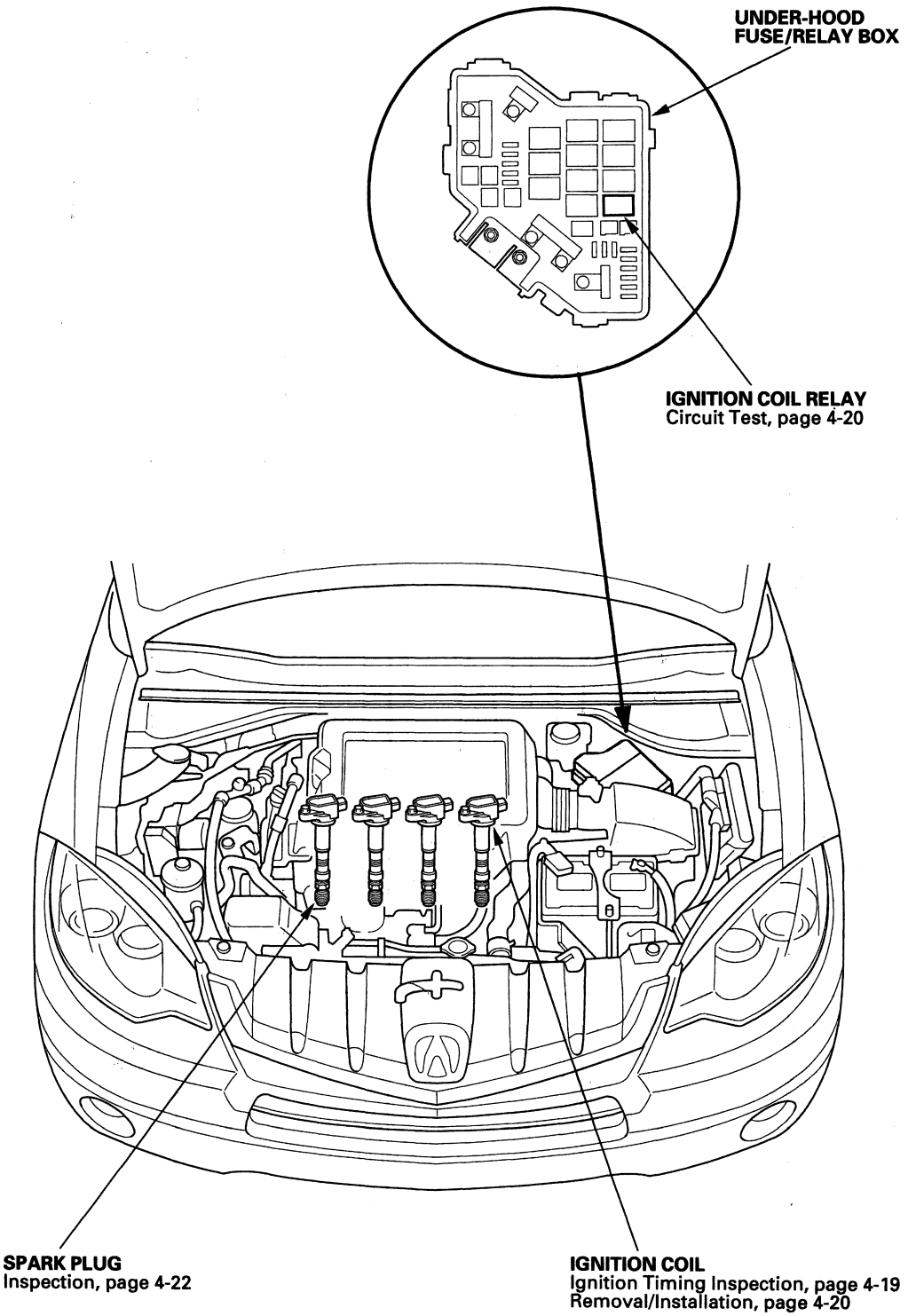

Protected by AR

# Ignition System

## Circuit Diagram

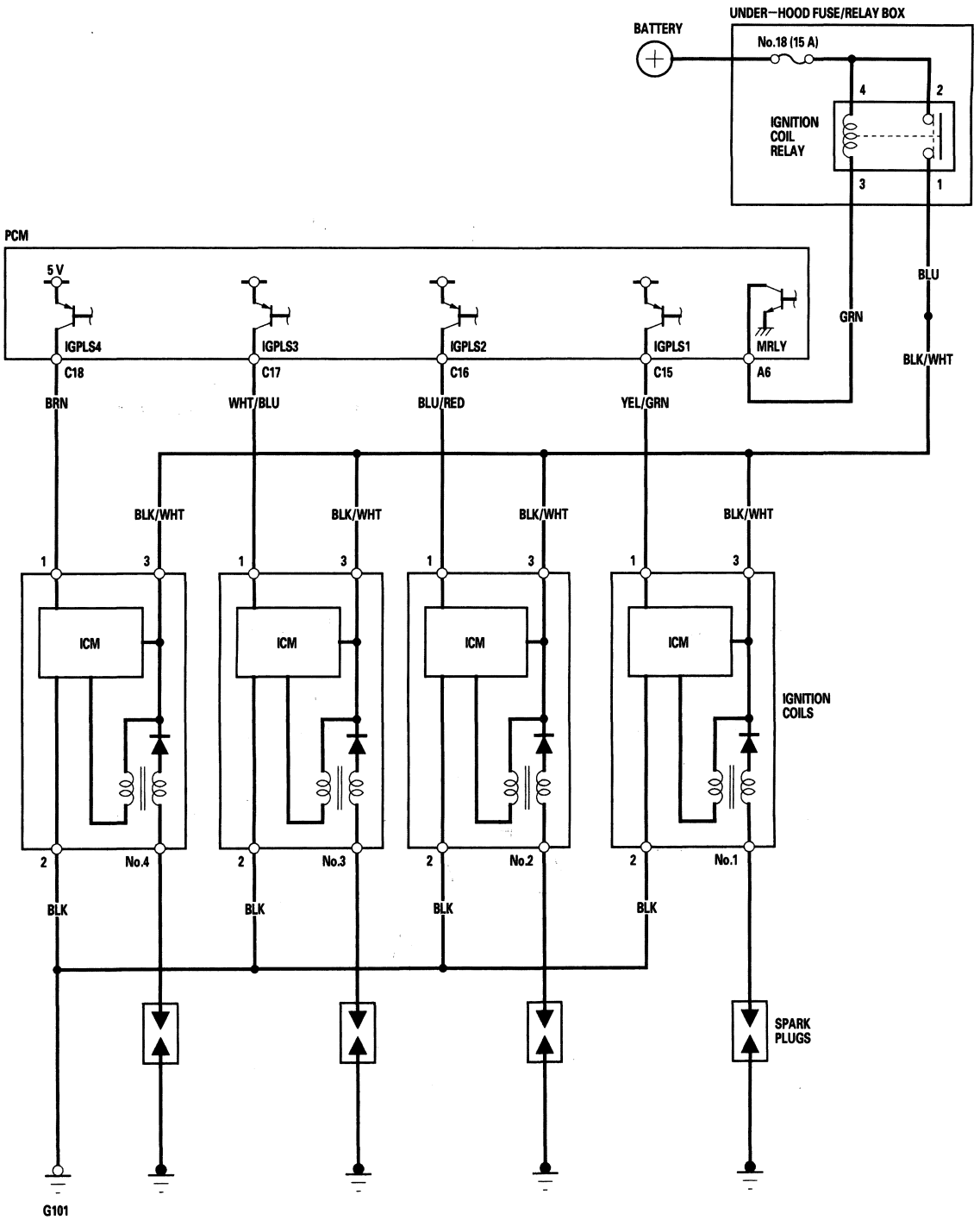


ICM : Ignition Control Module



BACK

Protected by AR



## Ignition Timing Inspection

1. Connect the Honda Diagnostic System (HDS) to the data link connector (DLC) (see step 2 on page 11-3).

2. Turn the ignition switch ON (II).

3. Make sure the HDS communicates with the vehicle and the powertrain control module (PCM). If it doesn't, troubleshoot the DLC circuit (see page 11-229).

4. Start the engine. Hold the engine speed at 3,000 rpm without load (in Park or neutral) until the radiator fan comes on, then let it idle.

5. Check the idle speed (see page 11-338).

6. Jump the SCS line with the HDS.

7. Connect the timing light to the service loop (white tape).

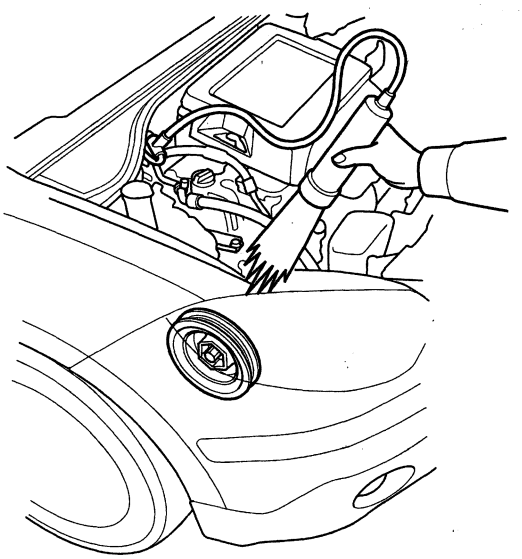

8. Aim the light toward the pointer (A) on the cam chain case. Check the ignition timing under a no load condition (headlights, blower fan, rear window defogger, and air conditioner are turned off).

   **Ignition Timing:**
   **14 °±2 °BTDC (RED mark (B)) at idle in P or N position**

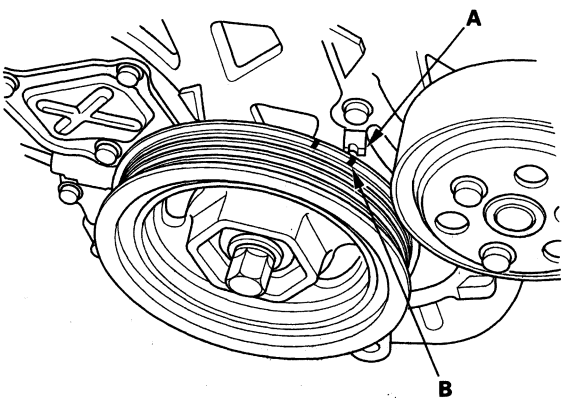


9. If the ignition timing differs from the specification, check the cam timing. If the cam timing is OK, update the PCM if it does not have the latest software (see page 11-7), or substitute a known-good PCM (see page 11-8), then recheck. If the system work properly, and the PCM was substituted, replace the original PCM (see page 11-252).

10. Disconnect the HDS and the timing light.

Protected by AR



## Ignition Coil Removal/Installation

1. Remove the charge air cooler (see page 9-8).

2. Remove the ignition coil cover (A), disconnect the ignition coil connectors (B), then remove the ignition coils (C).

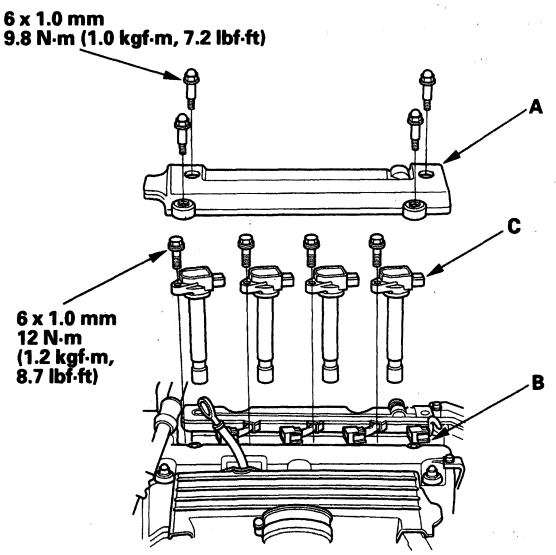


3. Install the ignition coils in the reverse order of removal.

## Ignition Coil Relay Circuit Troubleshooting

1. Check the No. 18 (15 A) fuse in the under-hood fuse/relay box.

   *Is the fuse OK?*

   **YES**—Go to step 2.

   **NO**—Replace the fuse.■

2. Remove the ignition coil relay from the under-hood fuse/relay box, and test it (see page 22-64).

   *Is the relay OK?*

   **YES**—Go to step 3.

   **NO**—Replace the ignition coil relay.■

3. Measure the voltage between ignition coil relay 4P socket terminal No. 2 and body ground, then terminal No. 4 and body ground.

**IGNITION COIL RELAY 4P SOCKET**

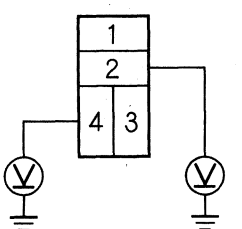


Terminal side of female terminals

*Is there battery voltage?*

**YES**—Go to step 4.

**NO**—Replace the under-hood fuse/relay box.■



BACK

Protected by AR



4. Check for continuity between ignition coil relay 4P socket terminal No. 2 and the No. 1 ignition coil 3P connector terminal No. 3.

**IGNITION COIL RELAY 4P SOCKET**

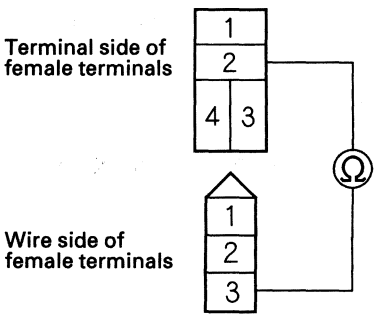


**No. 1 IGNITION COIL 3P CONNECTOR**

*Is there continuity?*

**YES**—Go to step 5.

**NO**—Repair open in the wire between ignition coil relay 4P socket terminal No. 2 and ignition coil 3P connector terminal No. 3.■

5. Connect the Honda Diagnostic System (HDS) to the data link connector (DLC) (see step 2 on page 11-3).

6. Turn the ignition switch ON (II).

7. Make sure the HDS communicates with the vehicle and the powertrain control module (PCM). If it doesn't, troubleshoot the DLC circuit (see page 11-229).

8. Jump the SCS line with the HDS, then turn the ignition switch OFF.

   NOTE: This step must be done to protect the PCM from damage.

9. Disconnect PCM connector A (44P).

10. Check for continuity between ignition coil relay 4P socket terminal No. 3 and body ground.

**IGNITION COIL RELAY 4P SOCKET**

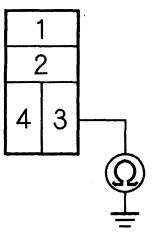


Terminal side of female terminals

*Is there continuity?*

**YES**—Repair short in the wire between ignition coil relay 4P socket terminal No. 3 and PCM (A6).■

**NO**—Go to step 11.

11. Check for continuity between ignition coil relay 4P socket terminal No. 3 and PCM connector terminal A6.

**IGNITION COIL RELAY 4P SOCKET**

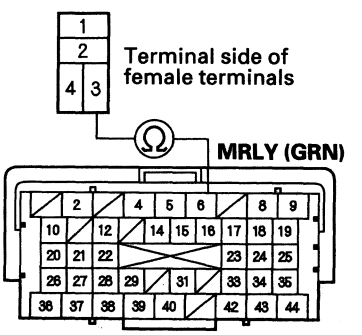


**PCM CONNECTOR A (44P)**

Terminal side of female terminals

*Is there continuity?*

**YES**—The system is OK at this time. Check for loose or poor connections at the ignition coil relay and the PCM (A6).■

**NO**—Repair open in the wire between ignition coil relay 4P socket terminal No. 3 and the PCM (A6).■

Protected by AR



## Spark Plug Inspection

1. Remove the spark plugs, and inspect the electrodes and ceramic insulator.

   - Burned or worn electrodes may be caused by:
     - Advanced ignition timing
     - Loose spark plug
     - Plug heat range too hot
     - Insufficient cooling

   - Fouled plugs may be caused by:
     - Retarded ignition timing
     - Oil in combustion chamber
     - Incorrect spark plug gap
     - Plug heat range too cold
     - Excessive idling/low speed running
     - Clogged air cleaner element
     - Deteriorated ignition coils

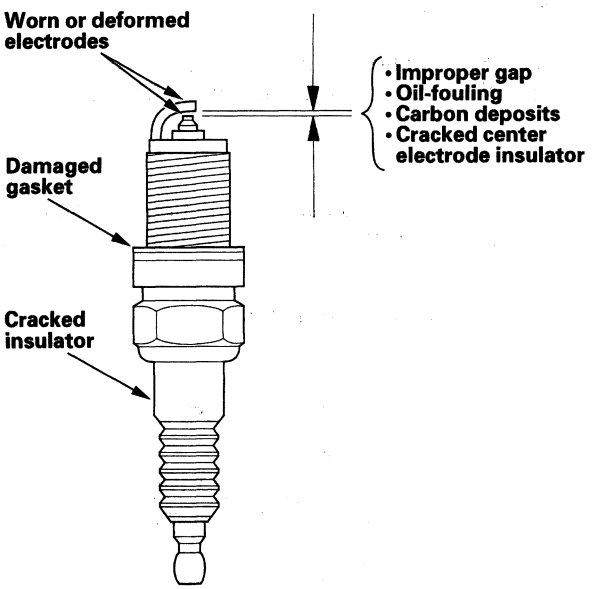


2. If the spark plug electrode is dirty or contaminated, clean the electrode with a plug cleaner.

   NOTE:
   - Do not use a wire brush or scrape the iridium electrode since this will damage the electrode.
   - When using a sand blaster spark plug cleaner, do not clean for more than 20 seconds to avoid damaging the electrode.

3. Replace the plug at the specified interval, or if the center electrode is rounded (A), or if the spark plug gap (B) is out of specification. Use only the listed spark plugs.

   NOTE: Do not adjust the gap of iridium tip plugs.

   **Spark Plugs**
   **NGK: SILKR8A-S**
   **Electrode Gap**
   **Standard (New): 0.7—0.8 mm (0.028—0.031 in.)**

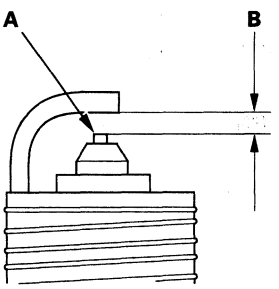


4. Apply a small amount of anti-seize compound to the plug threads, and screw the plugs into the cylinder head, finger-tight. Then torque them to 18 N·m (1.8 kgf·m, 13 lbf·ft).



BACK

Protected by AR



## Component Location Index

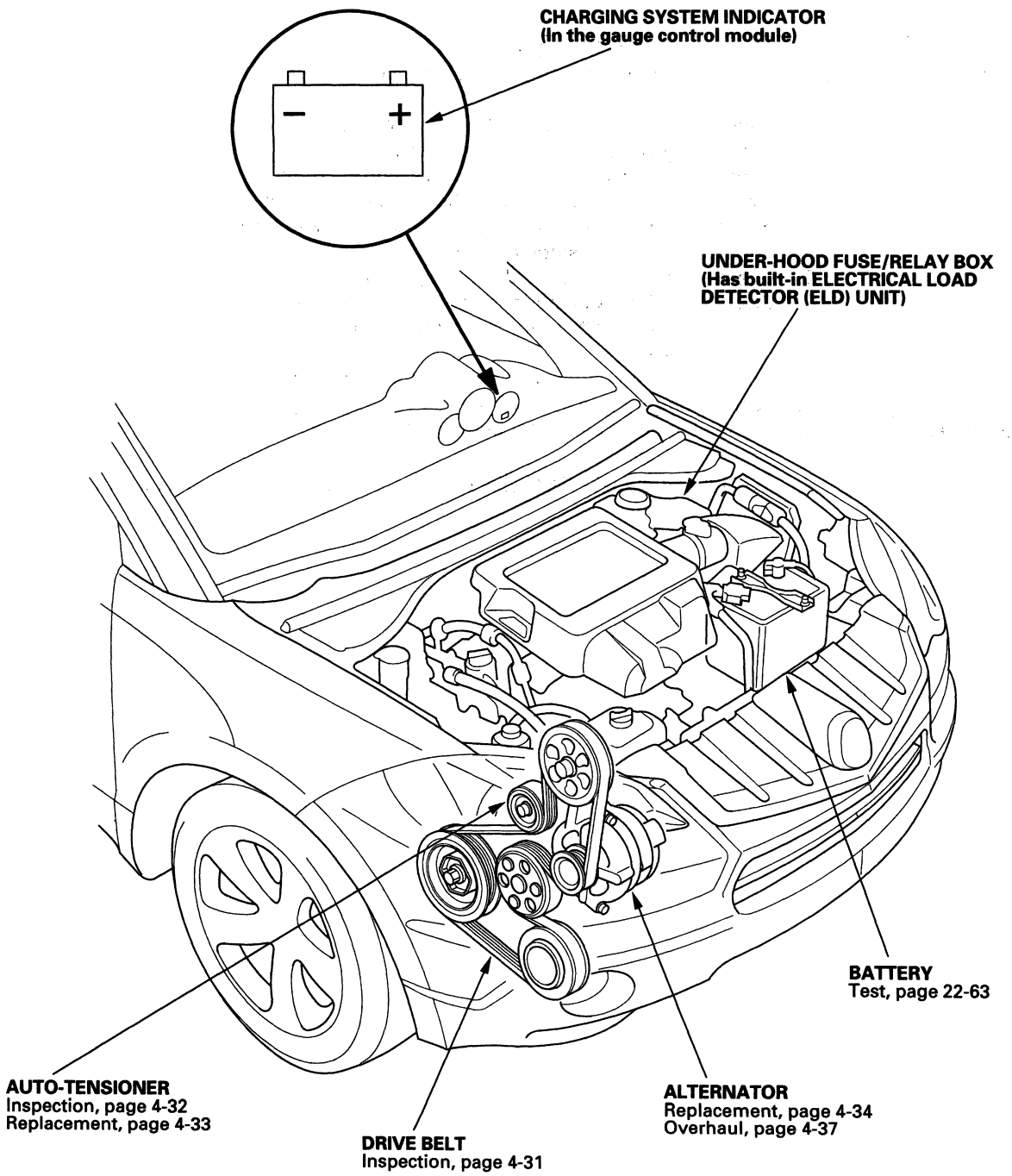

Protected by AR



## Symptom Troubleshooting Index

| Symptom | Diagnostic procedure | Also check for |
|---|---|---|
| Charging system indicator does not come on with the ignition switch ON (II) | Troubleshoot the charging system indicator circuit (see page 4-26). | |
| Charging system indicator stays on | 1. Check for PGM-FI DTCs (see page 11-3).<br>2. Troubleshoot the charging system indicator circuit (see page 4-26).<br>3. Check for a broken drive belt (see page 4-31).<br>4. Check the drive belt auto-tensioner (see page 4-32). | |
| Battery discharged | 1. Check for excessive parasitic electrical current draw with the ignition switch off, and the key removed. The multiplex control unit may take up to 10 minutes to turn off (sleep mode) for some models.<br>2. Check for a broken drive belt (see page 4-31).<br>3. Check the drive belt auto-tensioner (see page 4-32).<br>4. Troubleshoot the alternator and regulator circuit (see page 4-28).<br>5. Check for a poor connection at the battery terminal.<br>6. Test the battery (see page 22-63). | |
| Battery overcharged | 1. Troubleshoot the alternator and regulator circuit (see page 4-28).<br>2. Test the battery (see page 22-63). | |



BACK

Protected by AR



## Circuit Diagram

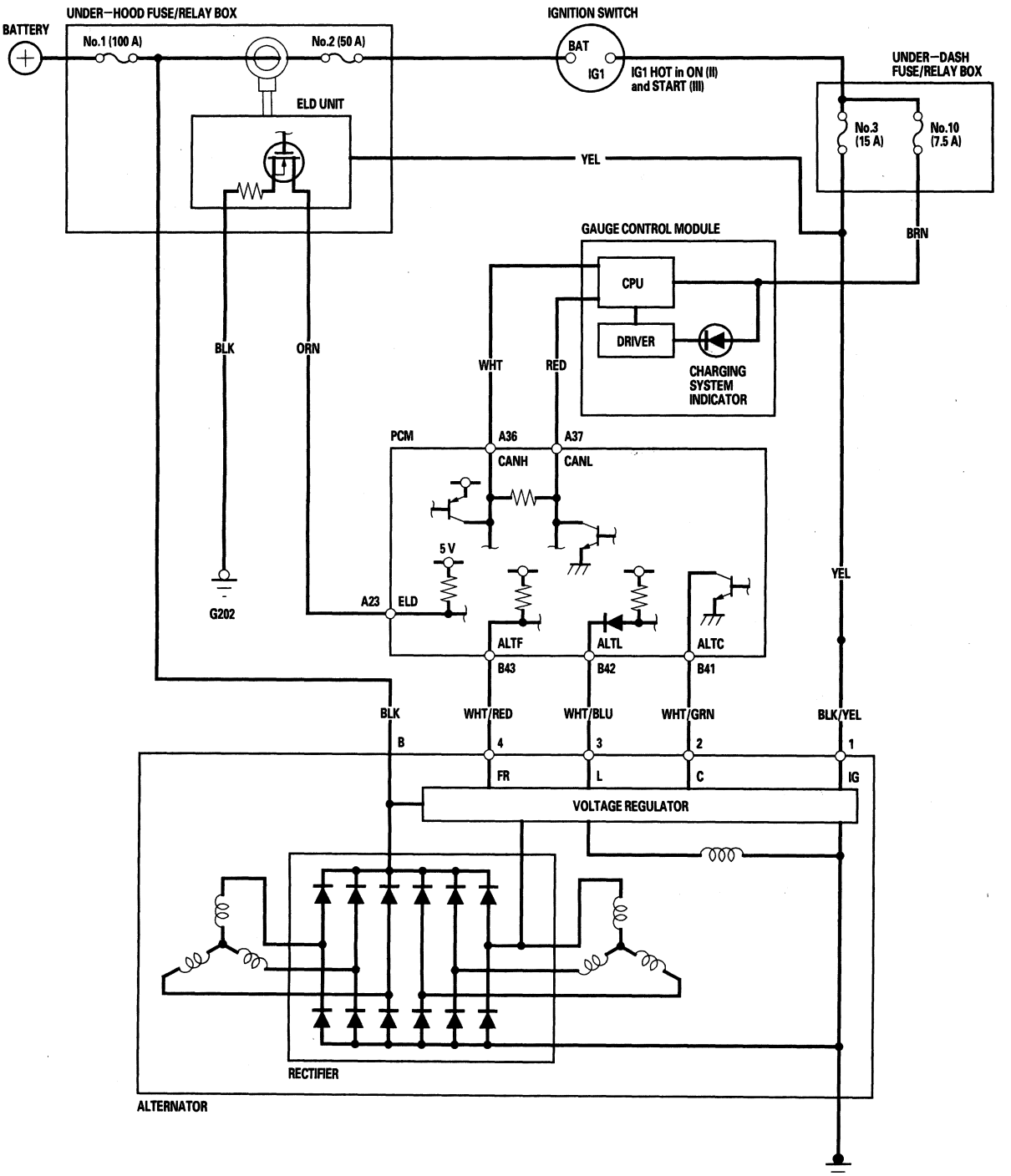

Protected by AR



## Charging System Indicator Circuit Troubleshooting

1. Turn the ignition switch ON (II).

   *Does the charging system indicator come on?*

   **YES**—Go to step 2.

   **NO**—Go to step 14.

2. Start the engine. Hold the engine speed at 2,000 rpm for 1 minute.

   *Does the charging system indicator go off?*

   **YES**—Charging system indicator circuit is OK. Go to the alternator and regulator circuit troubleshooting (see page 4-28).■

   **NO**—Go to step 3.

3. Do the gauge control module self-diagnostic function procedure (see page 22-258).

   *Does the charging system indicator flash?*

   **YES**—Go to step 4.

   **NO**—Replace the gauge control module (see page 22-284).■

4. Turn the ignition switch OFF.

5. Disconnect the alternator 4P connector.

6. Turn the ignition switch ON (II).

   *Does the charging system indicator go off?*

   **YES**—Replace the alternator (see page 4-34), or repair the alternator (see page 4-37).■

   **NO**—Go to step 7.

7. Turn the ignition switch OFF.

8. Connect the Honda Diagnostic System (HDS) to the data link connector (DLC) (see step 2 on page 11-3).

9. Turn the ignition switch ON (II).

10. Make sure the HDS communicates with the vehicle and the powertrain control module (PCM). If it doesn't, troubleshoot the DLC circuit (see page 11-229).

11. Jump the SCS line with the HDS, then turn the ignition switch OFF.

    NOTE: This step must be done to protect the PCM from damage.

12. Disconnect PCM connector B (44P).

13. Check for continuity between PCM connector terminal B42 and body ground.

**PCM CONNECTOR B (44P)**

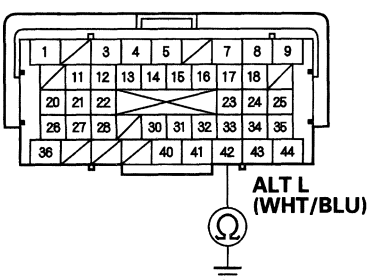


Terminal side of female terminals

*Is there continuity?*

**YES**—Repair short in the wire between the alternator and the PCM.■

**NO**—Update the PCM if it does not have the latest software (see page 11-7), or substitute a known-good PCM (see page 11-8), then recheck. If the symptom/indication goes away with a known-good PCM, replace the original PCM (see page 11-252).■



BACK

Protected by AR



14. Do the gauge control module self-diagnostic function procedure (see page 22-258).

    *Does the charging system indicator flash?*

    **YES**—Go to step 15.

    **NO**—Replace the gauge control module (see page 22-284). ■

15. Turn the ignition switch OFF.

16. Disconnect the alternator 4P connector.

17. Connect alternator 4P connector terminal No. 3 and body ground with a jumper wire.

**ALTERNATOR 4P CONNECTOR**

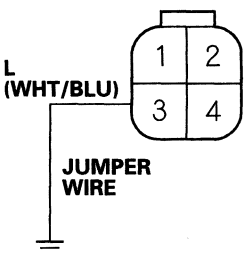


Wire side of female terminals

18. Turn the ignition switch ON (II).

    *Does the charging system indicator come on?*

    **YES**—Replace the alternator (see page 4-34), or repair the alternator (see page 4-37). ■

    **NO**—Leave the jumper from step 17 connected and go to step 19.

19. Connect the Honda Diagnostic System (HDS) to the data link connector (DLC) (see step 2 on page 11-3).

20. Turn the ignition switch ON (II).

21. Make sure the HDS communicates with the vehicle and the powertrain control module (PCM). If it doesn't, troubleshoot the DLC circuit (see page 11-229).

22. Jump the SCS line with the HDS, then turn the ignition switch OFF.

    NOTE: This step must be done to protect the PCM from damage.

23. Disconnect PCM connector B (44P).

24. Check for continuity between PCM connector terminal B42 and body ground.

**PCM CONNECTOR B (44P)**

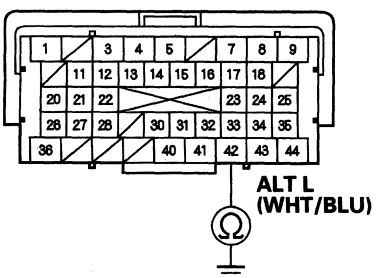


Terminal side of female terminals

*Is there continuity?*

**YES**—Update the PCM if it does not have the latest software (see page 11-7), or substitute a known-good PCM (see page 11-8), then recheck. If the symptom/indication goes away with a known-good PCM, replace the original PCM (see page 11-252). ■

**NO**—Repair open in the wire between the alternator and the PCM. ■

Protected by AR



## Alternator and Regulator Circuit Troubleshooting

1. Make sure the battery connections are good and the battery is sufficiently charged.

2. Connect a VAT-40 (or equivalent tester), and turn the selector switch to position 1 (starting).

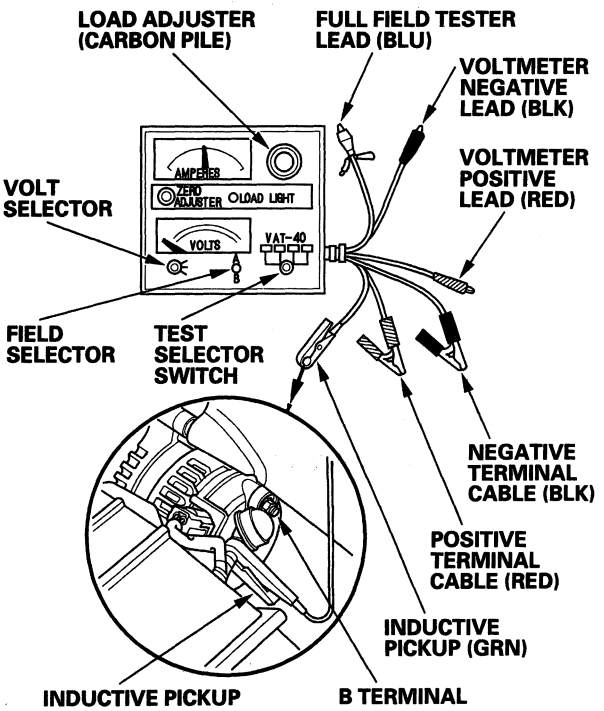


3. Start the engine. Hold the engine speed at 3,000 rpm, with no load until the radiator fan comes on, then let it idle.

4. Raise the engine speed to 2,000 rpm, and hold it there.

   *Is the voltage over 15.1 V?*

   **YES**—Replace the alternator (see page 4-34), or rear housing assembly (see page 4-37).■

   **NO**—Go to step 5.

5. Release the accelerator pedal, and let the engine idle.

6. Make sure all accessories are turned off. Turn the selector switch to position 2 (charging).

7. Remove the inductive pickup, and zero the ammeter.

8. Place the inductive pickup over the B terminal wire of the alternator so the arrow points away from the alternator.

9. Raise the engine speed to 2,000 rpm, and hold it there.

   *Is the voltage less than 13.5 V?*

   **YES**—Go to alternator control circuit troubleshooting (see page 4-29).■

   **NO**—Go to step 10.

10. Apply a load with the VAT-40 until the battery voltage drops within 12—13.5 V.

    *Is the amperage 90.0 A or more?*

    **YES**—The charging system is OK.■

    NOTE: If the charging system indicator is still on, replace the alternator (see page 4-34).

    **NO**—Replace the alternator (see page 4-34), or repair the alternator (see page 4-37).■



BACK

Protected by AR



## Alternator Control Circuit Troubleshooting

1. Connect the Honda Diagnostic System (HDS) to the data link connector (DLC) (see step 2 on page 11-3).

2. Turn the ignition switch ON (II).

3. Make sure the HDS communicates with the vehicle and the powertrain control module (PCM). If it doesn't, troubleshoot the DLC circuit (see page 11-229).

4. Check for DTCs (see page 11-3). If a DTC is present, diagnose and repair the cause before continuing with this test.

5. Disconnect the alternator 4P connector from the alternator.

6. Start the engine, and turn on the headlights to high beam.

7. Measure the voltage between alternator 4P connector terminal No. 2 and the positive terminal of the battery.

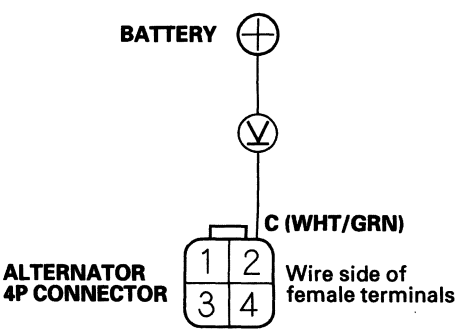


*Is there 1 V or less?*

**YES**—Go to step 11.

**NO**—Go to step 8.

8. Jump the SCS line with the HDS, then turn the ignition switch OFF.

   NOTE: This step must be done to protect the PCM from damage.

9. Disconnect PCM connector B (44P).

10. Check for continuity between PCM connector terminal B41 and body ground.

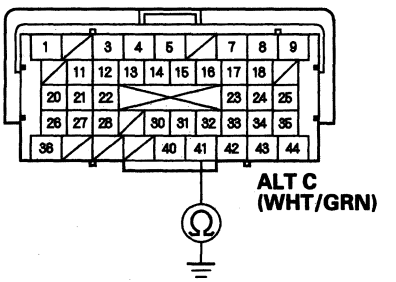


Terminal side of female terminals

*Is there continuity?*

**YES**—Repair short in the wire between the alternator and the PCM. ■

**NO**—Update the PCM if it does not have the latest software (see page 11-7), or substitute a known-good PCM (see page 11-8), then recheck. If the symptom/indication goes away with a known-good PCM, replace the original PCM (see page 11-252). ■

11. Jump the SCS line with the HDS, then turn the ignition switch OFF.

    NOTE: This step must be done to protect the PCM from damage.

12. Disconnect PCM connector B (44P).

(cont'd)

Protected by AR



## Alternator Control Circuit Troubleshooting (cont'd)

13. Check for continuity between PCM connector terminal B41 and alternator 4P connector terminal No. 2.

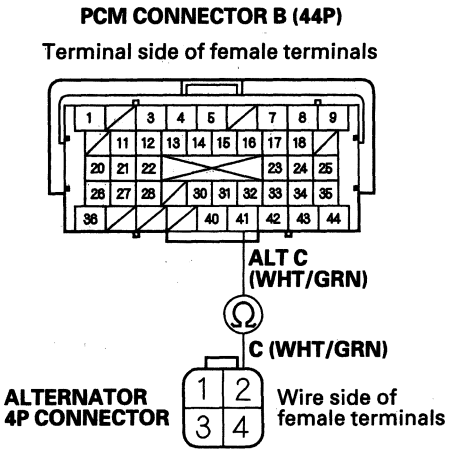


*Is there continuity?*

**YES**—Replace the alternator (see page 4-34), or repair the alternator (see page 4-37). ■

**NO**—Repair open in the wire between the alternator and the PCM. ■



BACK

Protected by AR



## Drive Belt Inspection

1. Inspect the belt for cracks and damage. If the belt is cracked or damaged, replace it.

2. Check that the auto-tensioner indicator (A) is within the standard range (B) as shown. If it is out of the standard range, replace the drive belt (see page 4-31).

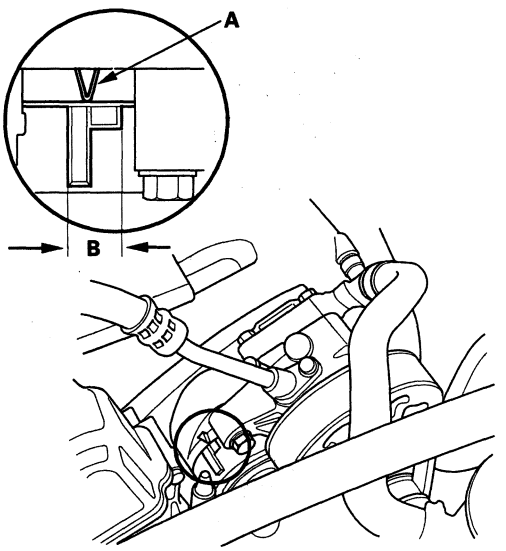


## Drive Belt Removal/Installation

**Special Tools Required**
Belt tension release tool Snap-on YA9317 or equivalent, commercially available

1. Move the auto-tensioner (A) with the belt tension release tool to relieve tension from the drive belt, then remove the drive belt.

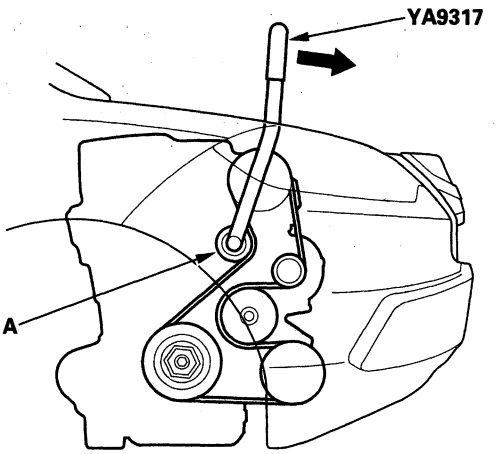


2. Install the new belt in the reverse order of removal.

Protected by AR



## Drive Belt Auto-tensioner Inspection

**Special Tools Required**
Belt tension release tool Snap-on YA9317 or equivalent, commercially available

1. Turn the ignition switch ON (II), and make sure to turn the A/C switch OFF. Turn the ignition switch OFF.

2. Check the position of the auto-tensioner indicator's pointer (A). Start the engine then check the position again with the engine idling. If the position of the indicator moves or fluctuates very much, replace the auto-tensioner (see page 4-33).

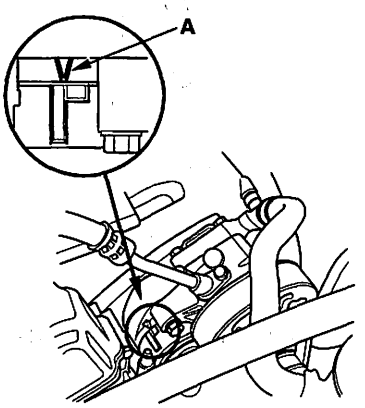


3. Check for abnormal noise from the tensioner pulley. If you hear abnormal noise, replace the tensioner pulley.

4. Remove the drive belt (see page 4-31).

5. Move the auto-tensioner within its limit with the belt tension release tool in the direction shown. Check that the tensioner moves smoothly and without any abnormal noise. If the tensioner does not move smoothly or you hear abnormal noise, replace the auto-tensioner.

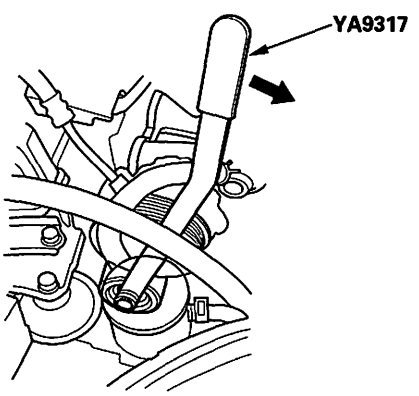


6. Remove the auto-tensioner (see page 4-33).

7. Clamp the auto-tensioner (A) by using two 8 mm bolts (B) and a vise (C) as shown. Do not clamp the auto-tensioner itself.

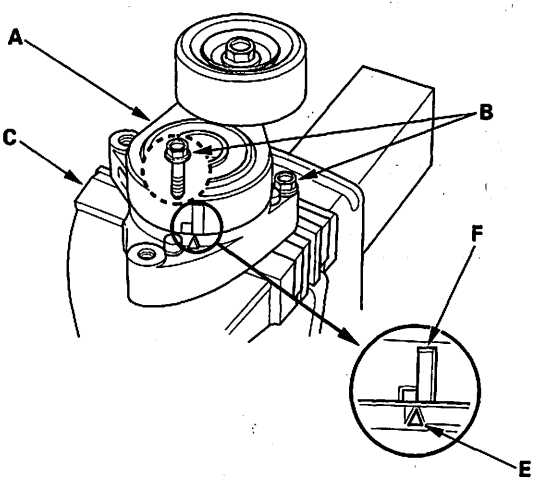


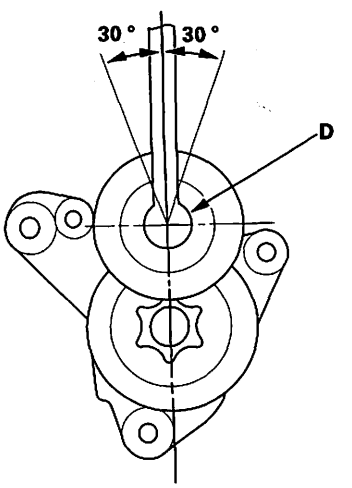


8. Set the torque wrench (D) in the pulley bolt in the direction shown.

9. Align the indicator (E) on the tensioner base with center mark (F) on the tensioner arm by using the torque wrench, and measure the torque. If the torque value is out of specification, replace the auto-tensioner.

   NOTE: If the indicator exceeds the center mark, recheck the torque.

   **Auto-tensioner Spring Torque:**
   **32.5—39.7 N·m (3.31—4.05 kgf·m, 23.9—29.3 lbf·ft)**



BACK

Protected by AR



## Drive Belt Auto-tensioner Removal/ Installation

1. Remove the drive belt (see page 4-31).
2. Remove the power steering (P/S) fluid reservoir from the holder.
3. Remove the P/S pump (A) without disconnecting the P/S hoses, then remove the P/S hose from the clamp (B).

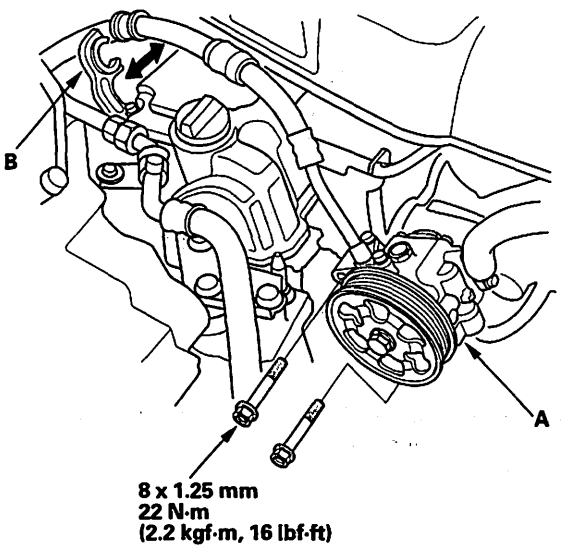


4. Remove the auto-tensioner.

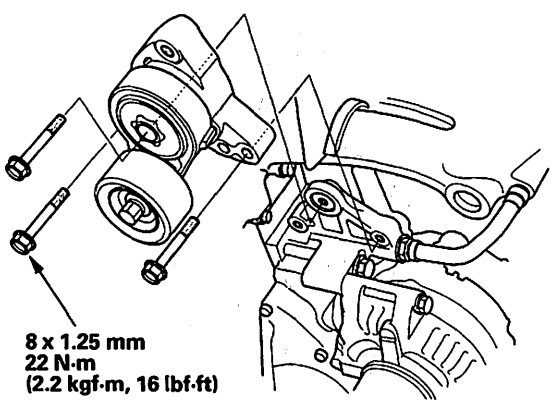


5. Install the auto-tensioner in the reverse order of removal.

## Tensioner Pulley Replacement

1. Remove the drive belt (see page 4-31).
2. Remove the tensioner pulley bolt (A), then remove the tensioner pulley (B).

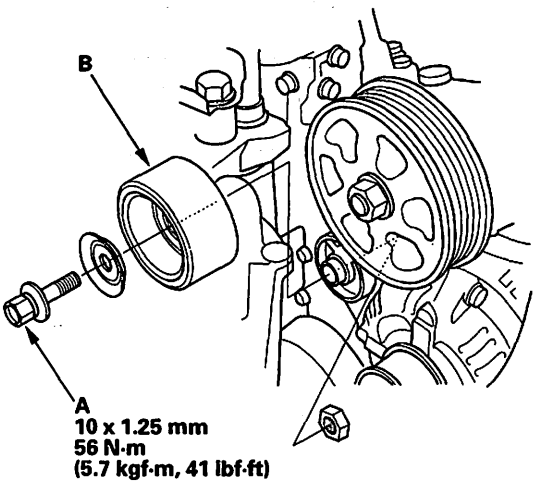


3. Install the tensioner pulley in the reverse order of removal.

Protected by AR



## Alternator Removal and Installation

### Removal

1. Make sure you have the anti-theft code for the audio system and the navigation system (if equipped), then write down the audio presets.

2. Disconnect the negative cable from the battery first, then disconnect the positive cable.

3. Remove the drive belt (see page 4-31).

4. Remove the clip (A), then remove the coolant reservoir (B) from the holder.

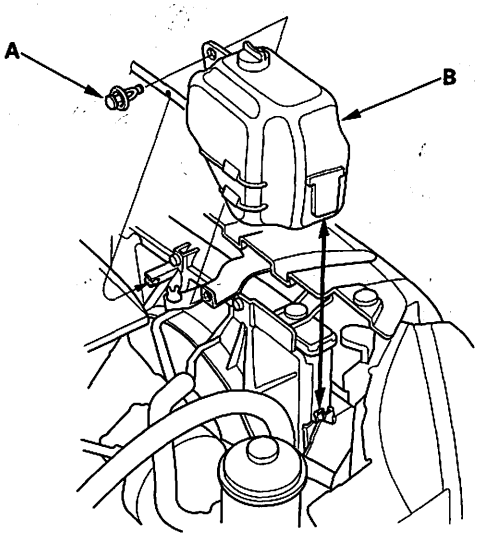


5. Remove the clips (A), then remove the support rod clamp bracket (B).

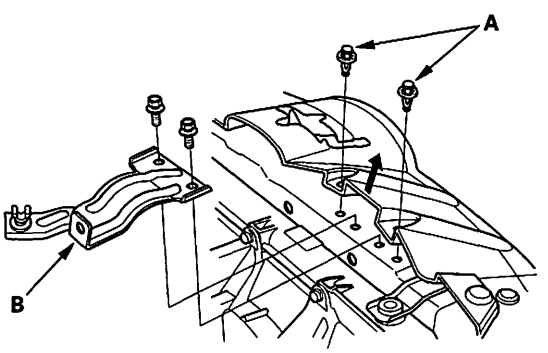


6. Disconnect the A/C condenser fan motor connector (A), then remove the A/C condenser fan shroud assembly (B).

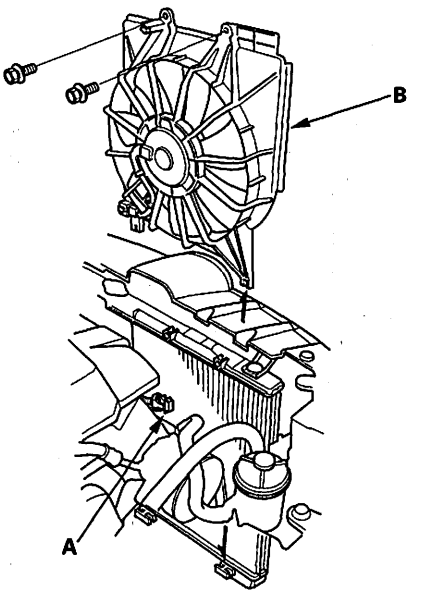


7. Disconnect the alternator connector (A) and BLK wire (B), then remove the harness clamp (C) from the alternator.

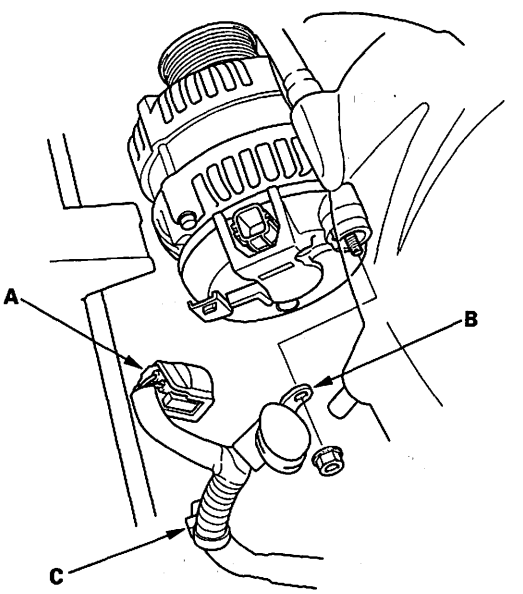




BACK

Protected by AR



8. Remove the alternator.

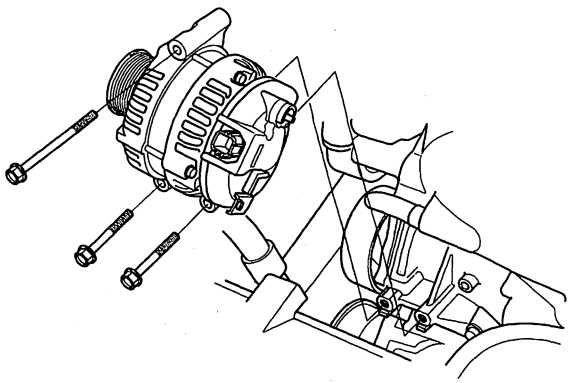

## Installation

1. Install the alternator.

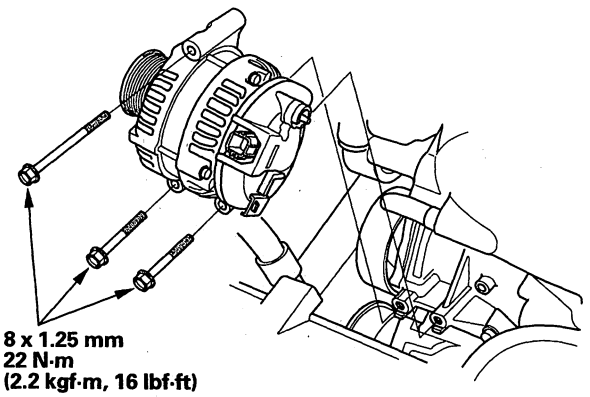


2. Connect the alternator connector (A) and BLK wire (B), then install the harness clamp (C) to the alternator.

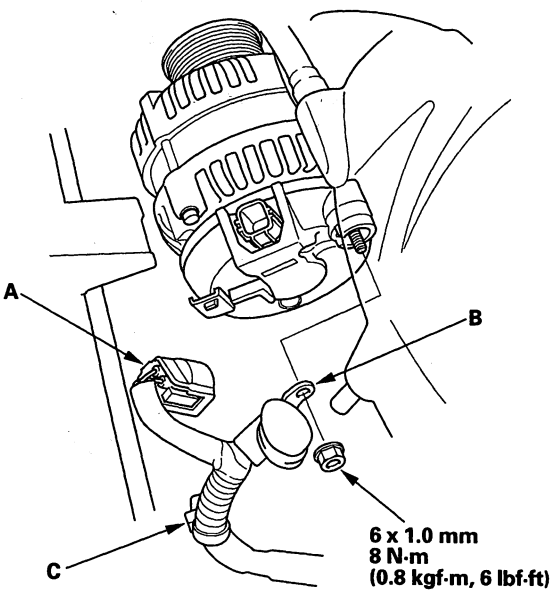


(cont'd)

Protected by AR



## Alternator Removal and Installation (cont'd)

3. Install the A/C condenser fan shroud assembly (A), then connect the A/C condenser fan motor connector (B).

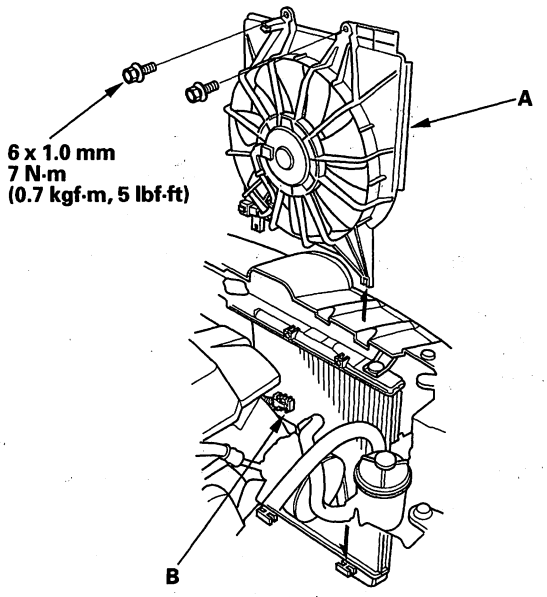


4. Install the support rod clamp bracket (A), then install the clips (B).

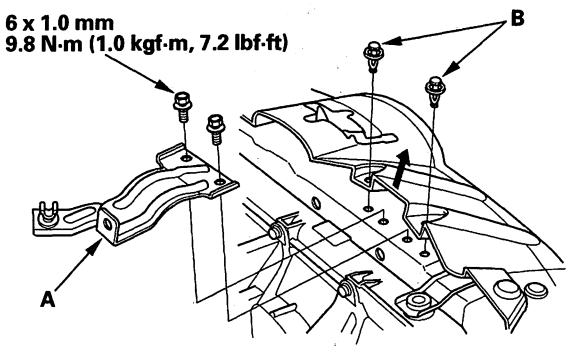


5. Install the coolant reservoir.

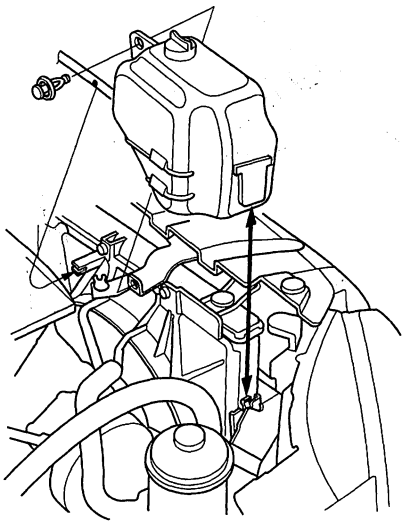

6. Install the drive belt (see page 4-31).

7. Connect the positive cable to the battery first, then connect the negative cable.

8. Enter the anti-theft code for the audio system and the navigation system (if equipped), then enter the audio presets.

9. Set the clock.



BACK

Protected by AR



## Alternator Overhaul

### Exploded View

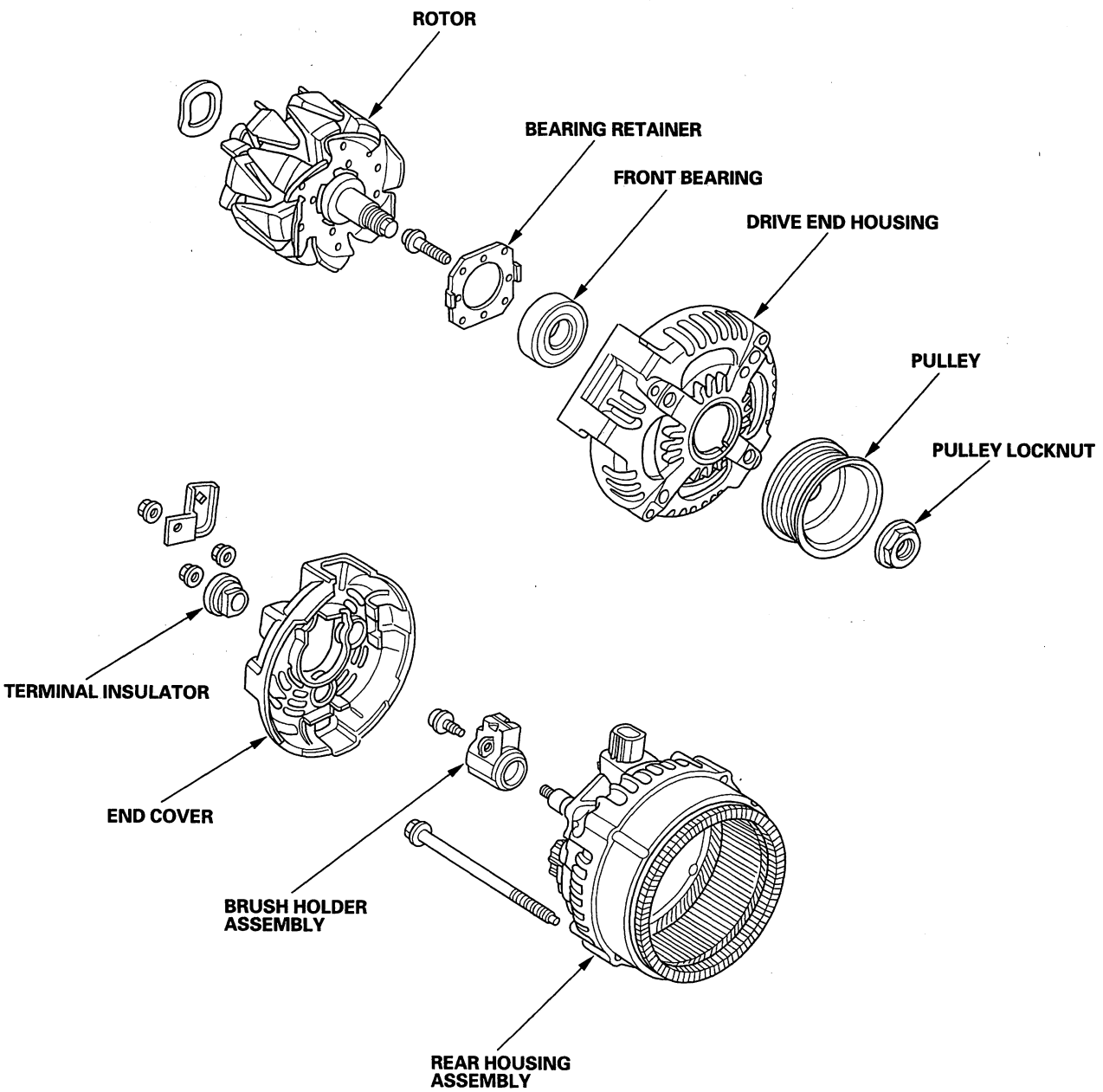


(cont'd)

Protected by AR



## Alternator Overhaul (cont'd)

**Special Tools Required**
- Driver 07749-0010000
- Attachment, 42 x 47 mm 07746-0010300

NOTE: Refer to the Exploded View as needed during this procedure.

1. Test the alternator and regulator before you remove them (see page 4-28).

2. Remove the alternator (see page 4-34).

3. If the front bearing needs replacing, remove the pulley locknut with a 10 mm wrench (A) and a 22 mm wrench (B). If necessary, use an impact wrench.

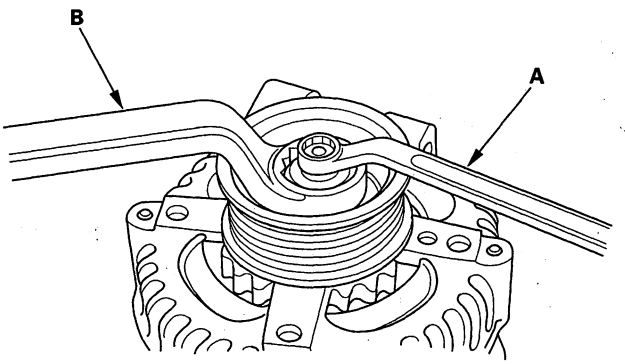


4. Remove the harness stay and the three flange nuts from the alternator.

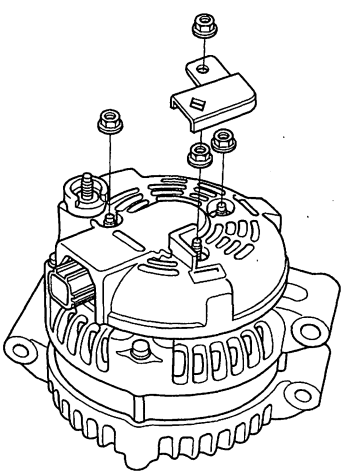

5. Remove the end cover.

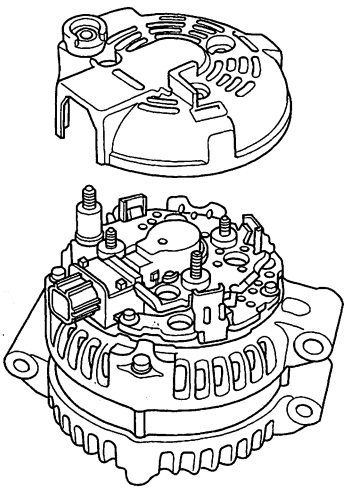

6. Remove the brush holder.

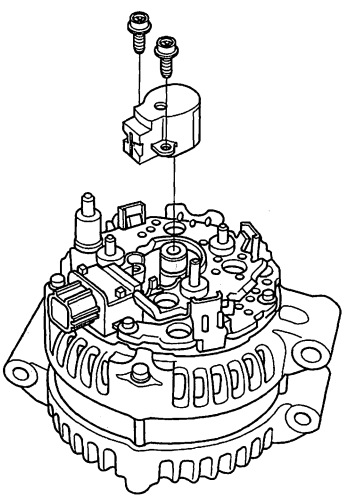



BACK

Protected by AR



7. Remove the four bolts, then remove the rear housing assembly (A), and washer (B).

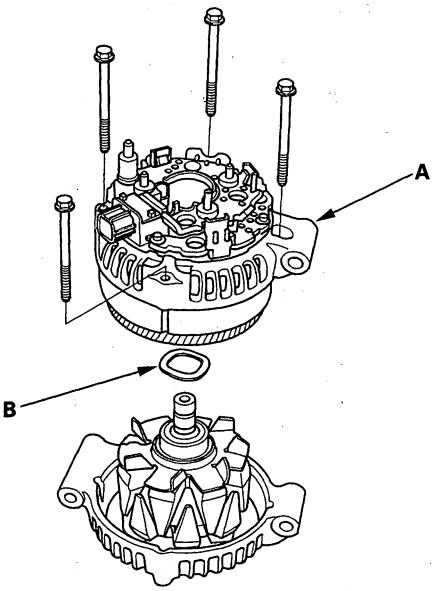


8. If you are not replacing the front bearing, go to step 13. Remove the rotor from the drive end housing.

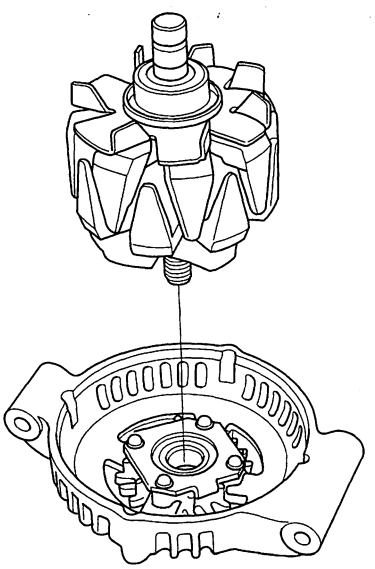

9. Inspect the rotor shaft for scoring, and inspect the bearing journal surface in the drive end housing for seizure marks.

   - If the rotor is damaged, replace the rotor assembly.
   - If the rotor is OK, go to step 10.

10. Remove the front bearing retainer plate.

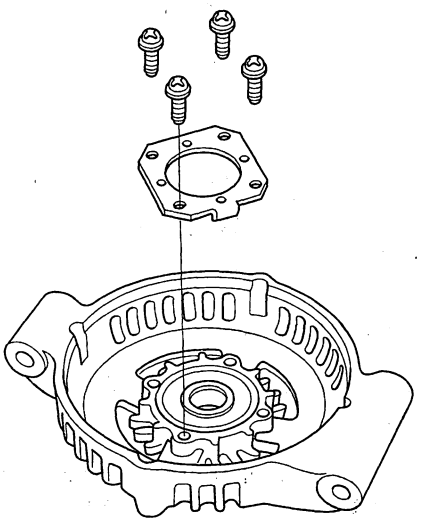

11. Drive out the front bearing with a brass drift and hammer.

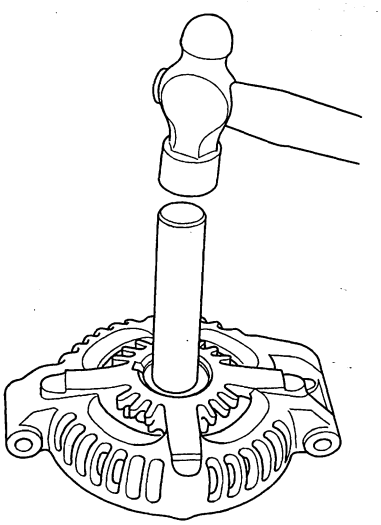

(cont'd)

Protected by AR



## Alternator Overhaul (cont'd)

12. With a hammer, driver, and attachment, install a new front bearing in the drive end housing.

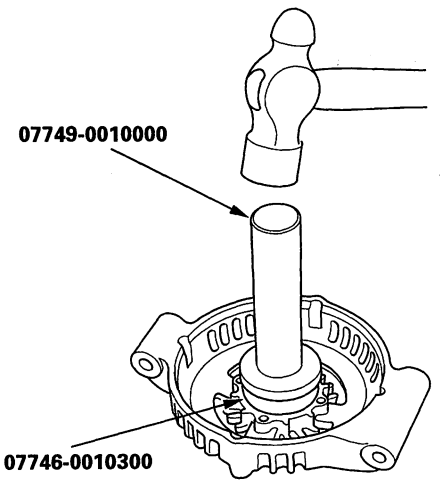


**Alternator Brush Inspection**

13. Measure the length of both brushes (A) with vernier calipers (B).

- If either brush is shorter than the service limit, replace the brush holder assembly.
- If brush length is OK, go to step 14.

**Alternator Brush Length**
**Standard (New): 10.5 mm (0.41 in.)**
**Service Limit: 1.5 mm (0.06 in.)**

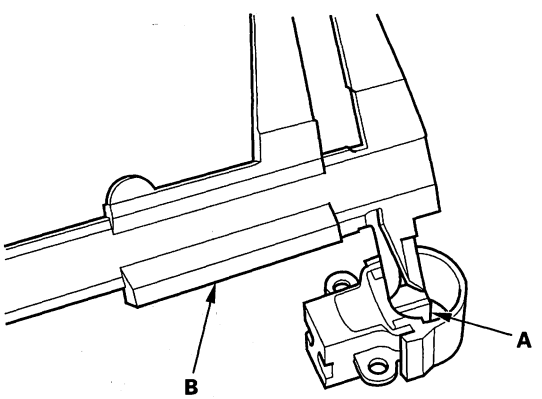


**Rotor Slip Ring Test**

14. Check for continuity between the slip rings (A).

- If there is continuity, go to step 15.
- If there is no continuity, replace the rotor assembly.

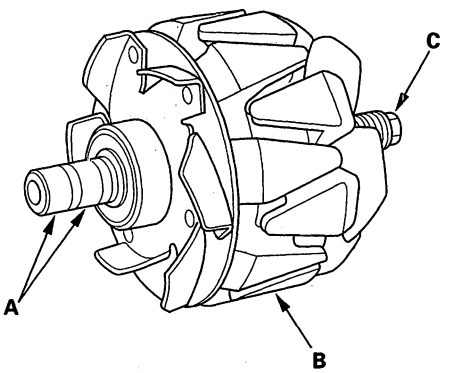


15. Check for continuity between each slip ring and the rotor (B) and the rotor shaft (C).

- If there is no continuity, replace the rear housing assembly, and go to step 16.
- If there is continuity, replace the rotor assembly.



BACK

Protected by AR



**Alternator Reassembly**

16. If you removed the pulley, put the rotor in the drive end housing, then tighten its locknut to 110 N·m (11.2 kgf·m, 81.0 lbf·ft).

17. Remove any grease or any oil from the slip rings.

18. Put the rear housing assembly and drive end housing/rotor assembly together, tighten the four through bolts.

19. Push the brushes (A) in, then insert a pin or drill bit (B) (about 1.6 mm (0.06 in.) diameter) to hold them there.

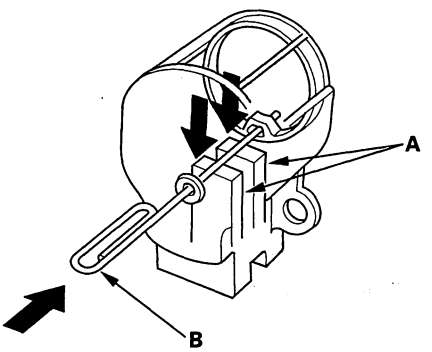


20. Install the brush holder, and pull out the pin.

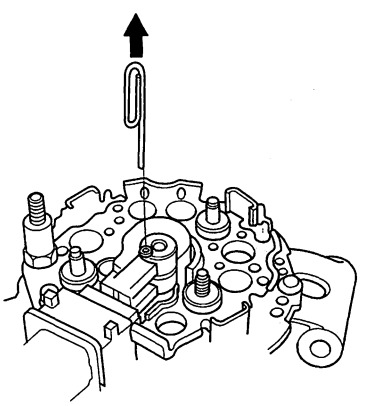

21. Install the end cover.

22. After assembling the alternator, turn the pulley by hand to make sure the rotor turns smoothly and without noise.

23. Install the alternator (see page 4-34) and drive belt (see page 4-31).

Protected by AR



## Component Location Index

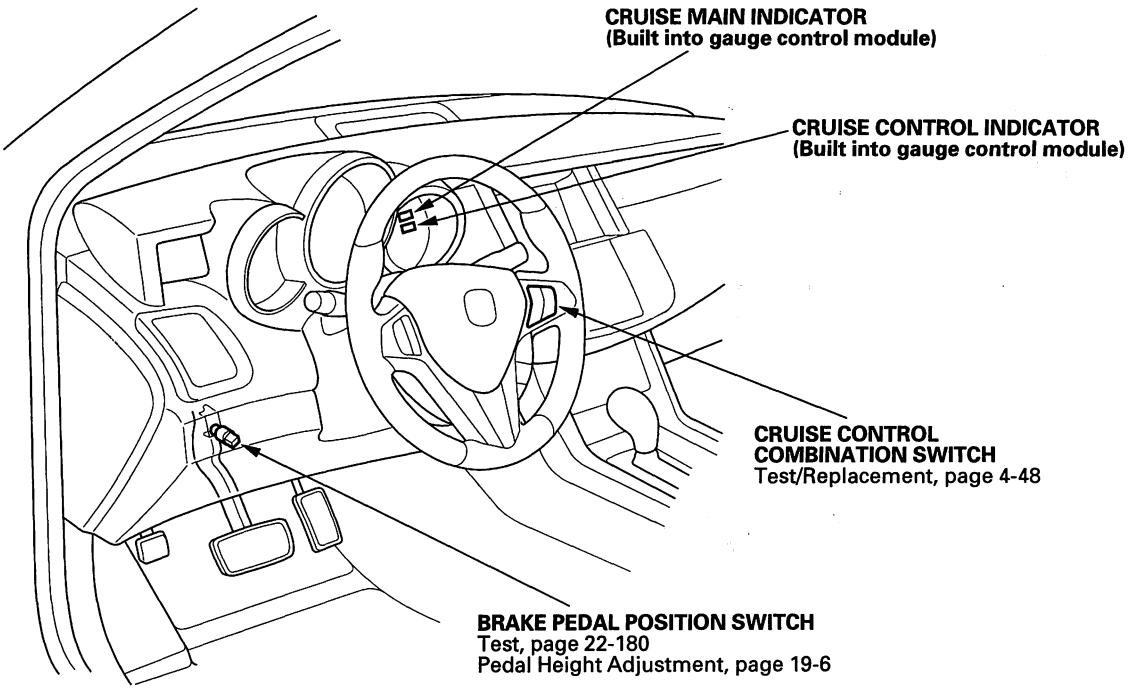


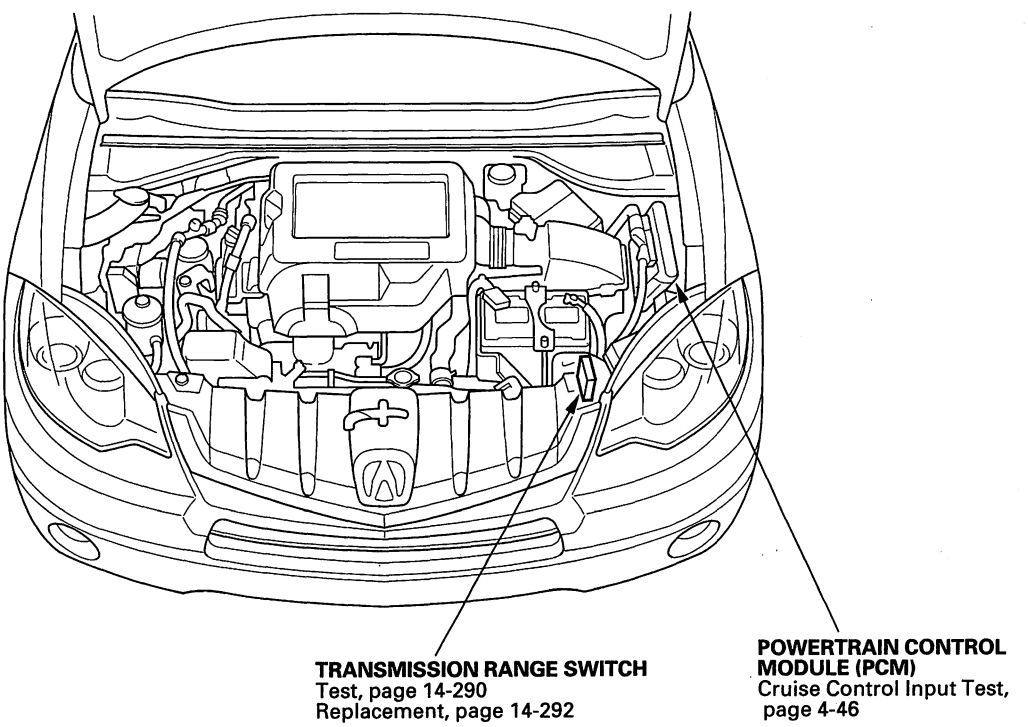




BACK

Protected by AR



## Symptom Troubleshooting Index

| Symptom | Diagnostic procedure | Also check for |
|---|---|---|
| Cruise control cannot be set | 1. Check for PGM-FI DTCs (see page 11-3).<br>2. Check the No. 3 (15 A) fuse in the under-dash fuse/relay box.<br>3. Do the cruise control input test (see page 4-46).<br>4. Do the cruise control combination switch test (see page 4-48). | |
| Cruise control can be set, but the cruise main indicator does not come on | 1. Check for PGM-FI DTCs (see page 11-3).<br>2. Do the gauge control module self-diagnostic function procedure (see page 22-258).<br>3. Do the cruise control input test (see page 4-46). Test the cruise control main switch signal input. | Faulty gauge control module |
| Cruise control can be set, but the cruise control indicator does not come on | 1. Check for PGM-FI DTCs (see page 11-3).<br>2. Do the gauge control module self-diagnostic function (see page 22-258).<br>3. Do the cruise control input test (see page 4-46). Test the cruise control indicator signal input. | Faulty gauge control module |
| Vehicle does not decelerate or accelerate accordingly when the set/decel or resume/accel switch is pressed | 1. Check for PGM-FI DTCs (see page 11-3).<br>2. Do the cruise control input test (see page 4-46). Test the cruise control set/decel, resume/accel switch signal input.<br>3. Do the cruise control combination switch test (see page 4-48). | Open circuit, loose or disconnected terminals: GRY or LT BLU |
| Set speed does not cancel when the brake pedal is pressed | 1. Check for PGM-FI DTCs (see page 11-3).<br>2. Do the cruise control input test (see page 4-46). Test the brake pedal position switch signal input.<br>3. Do the brake pedal position switch test (see page 19-6). | • Short to power on the BRN wire<br>• Faulty brake pedal position switch |
| Set speed does not cancel when the cruise control main switch is pressed | 1. Check for PGM-FI DTCs (see page 11-3).<br>2. Do the cruise control input test (see page 4-46). Test the cruise control main switch signal input.<br>3. Do the cruise control combination switch test (see page 4-48). | Short to power on the LT GRN wire |
| Set speed does not cancel when the cancel switch is pressed | 1. Check for PGM-FI DTCs (see page 11-3).<br>2. Do the cruise control input test (see page 4-46). Test the cruise control cancel switch signal input.<br>3. Do the cruise control combination switch test (see page 4-48). | Open circuit, loose or disconnected terminals: GRY or LT BLU |

(cont'd)

Protected by AR



## Symptom Troubleshooting Index (cont'd)

| Symptom | Diagnostic procedure | Also check for |
|---|---|---|
| Set speed will not resume when the resume/accel switch is pressed (with the cruise control main switch turned on, and set speed temporarily canceled by pressing the brake pedal) | 1. Check for PGM-FI DTCs (see page 11-3).<br>2. Check the brake pedal position switch adjustment (see page 19-6).<br>3. Check the No. 3 (15 A) fuse in the under-dash fuse/relay box.<br>4. Do the cruise control input test (see page 4-46).<br>Test the cruise control resume/accel switch signal input.<br>Test the brake pedal position switch signal input.<br>5. Do the cruise control combination switch test (see page 4-48). | • Faulty brake pedal position switch<br>• Open circuit, loose or disconnected terminals: LT BLU |
| With the ignition switch ON (II), and the lighting switch turned on, the cruise control combination switch illumination does not come on | Replace the cruise control combination switch (see page 4-48). | |



BACK

Protected by AR



## Circuit Diagram

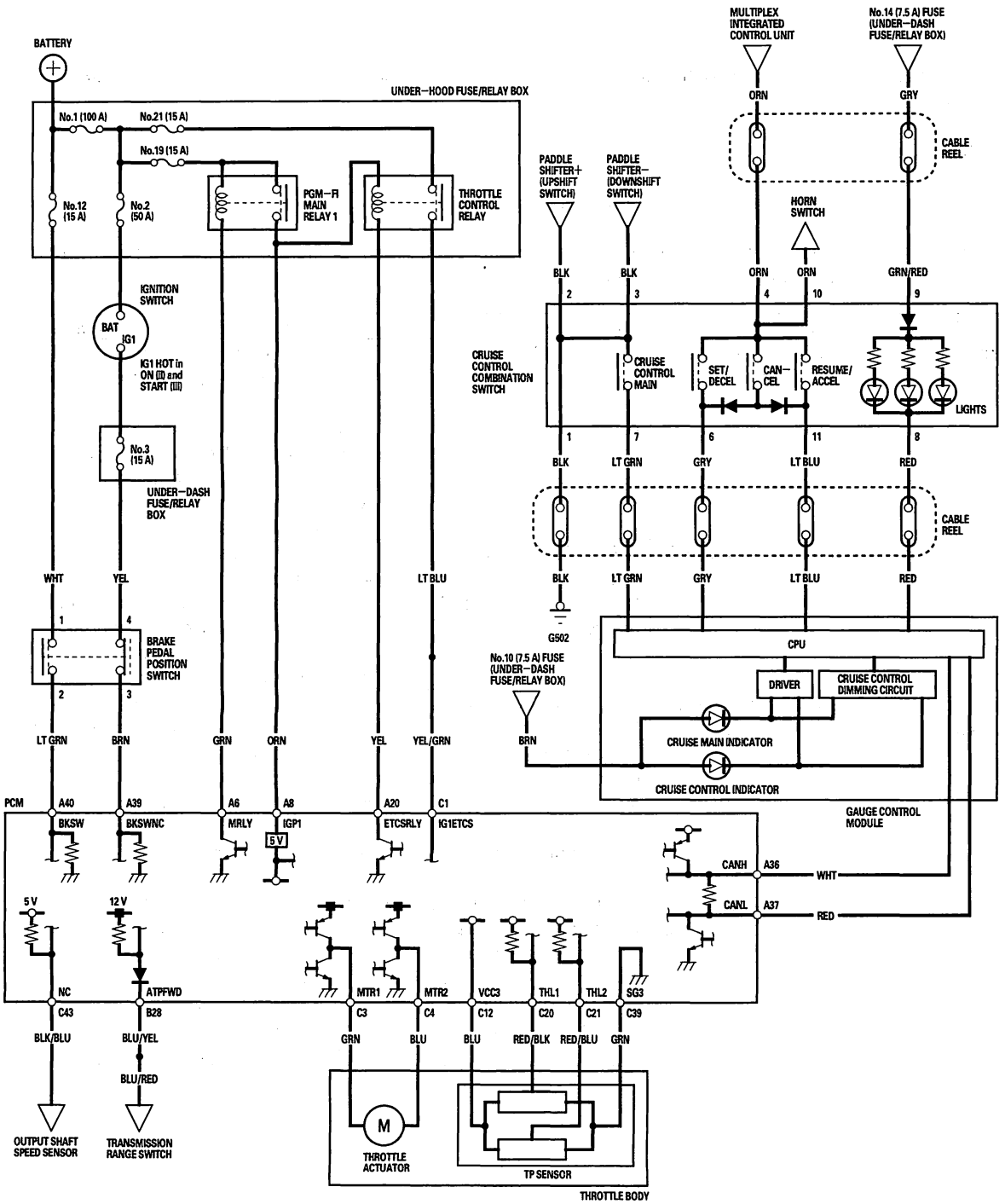

Protected by AR



## Cruise Control Input Test

1. Connect the Honda Diagnostic System (HDS) to the data link connector (DLC) (see step 2 on page 11-3).
2. Turn the ignition switch ON (II).
3. Make sure the HDS communicates with the vehicle and the PCM. If it doesn't, troubleshoot the DLC circuit (see page 11-229).
4. Go to PGM-FI, and check for DTCs.
5. Do the following tests while monitoring parameters in the PGM-FI DATA LIST with the HDS.

   NOTE: Intermittent failures are often caused by loose circuit connections. While monitoring cruise control inputs, flex their circuits, and note if any of the test results change.

| Signal to be tested | Test condition | Parameter: Desired result | Possible cause if result is not obtained |
|---|---|---|---|
| Brake switch signal | Brake pedal pressed, then released | CRUISE BRAKE SW should indicate OFF when the brake pedal is pressed and ON when the brake pedal is released. | • Faulty brake pedal position switch<br>• Blown No. 3 (15 A) fuse in the under-dash fuse/relay box<br>• An open in the wire between the powertrain control module (PCM) and the brake pedal position switch<br>• A wire shorted to ground between the PCM and the brake pedal position switch |
| Transmission range switch signal | Shift lever in D and S | SHIFT/CLUTCH SW should indicate ON in P, R and N and OFF in D and S. | • Faulty transmission range switch<br>• An open in the wire between the PCM and the transmission range switch<br>• A wire shorted to ground between the PCM and the transmission range switch<br>• Poor ground G101 |
| Cruise control main switch signal | Cruise control main switch ON and OFF | CRUISE CONTROL MAIN SW should indicate ON when the cruise control main switch is turned ON and OFF when the cruise control main switch is turned OFF. | • Faulty cruise control main switch<br>• An open in the wire between the gauge control module and the cruise control main switch<br>• A wire shorted to ground between the gauge control module and the cruise control main switch |
| Set switch signal | Set/decel switch pressed and released | CRUISE CONTROL SET SW should indicate ON when the set/decel switch is pressed and OFF when the set/decel switch is released. | • Faulty cruise control combination switch<br>• An open in the wire between the gauge control module and the cruise control combination switch<br>• A wire shorted to ground between the gauge control module and the cruise control combination switch |



BACK

Protected by AR



| Signal to be tested | Test condition | Parameter: Desired result | Possible cause if result is not obtained |
|---|---|---|---|
| Resume switch signal | Resume/accel switch pressed and released | CRUISE CONTROL RESUME SW should indicate ON when the resume/accel switch is pressed and OFF when the resume/accel switch is released. | • Faulty cruise control combination switch<br>• An open in the wire between the gauge control module and the cruise control combination switch<br>• A wire shorted to ground between the gauge control module and the cruise control combination switch |
| Cancel switch signal | Cancel switch pressed and released | CRUISE CONTROL CANCEL SW should indicate ON when the cancel switch is pressed and OFF when the cancel switch is released. | Faulty cruise control combination switch |
| Cruise control main switch signal | Cruise control main switch ON and OFF | CRUISE CONTROL MAIN SW should indicate ON when the cruise control main switch is turned ON and OFF when the cruise control main switch is turned OFF. | • Faulty cruise control combination switch<br>• An open in the wire between the gauge control module and the cruise control combination switch<br>• A wire shorted to ground between the gauge control module and the cruise control combination switch<br>• An open in the wire between the cruise control combination switch and ground |
| Cruise control indicator signal | Start the engine, turn the cruise control main switch on, and drive the vehicle to speeds over 25 mph (40 km/h). Set and cancel the cruise control. | CRUISE INDICATOR should indicate ON when the cruise control is set and OFF when the cruise control is canceled. | Faulty gauge control module |

Protected by AR



## Cruise Control Combination Switch Test/Replacement

SRS components are located in this area. Review the SRS component locations (see page 24-12), and the precautions and procedures (see page 24-14), in the SRS before doing repairs or service.

1. Remove the driver's airbag (see page 24-146).
2. Remove the steering wheel trim (see page 17-22).
3. Remove the cruise control combination switch.

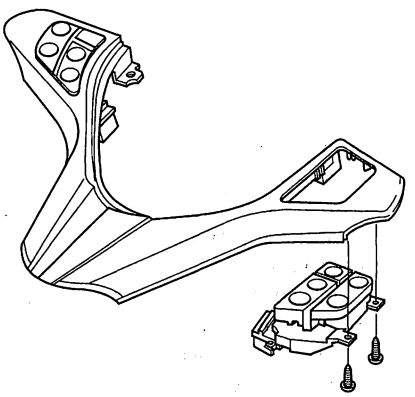

4. Check for continuity between the terminals in each switch position according to the table.
   - If there is continuity, and it matches the table, but switch failure occurred on the cruise control input test, check and repair the wire harness on the switch circuit.
   - If there is no continuity in one or more positions, replace the switch.

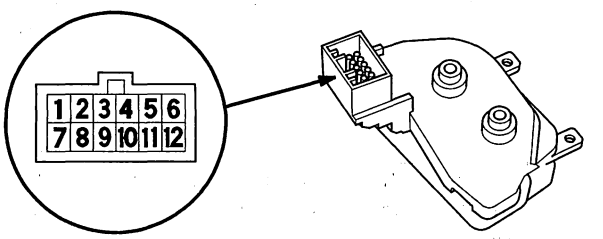


Terminal side of male terminals

| Position \ Terminal | 1 | 7 | 4 | | 11 | 6 |
|---|---|---|---|---|---|---|
| Cruise control main switch (ON) | ○ | ○ | | | | |
| Cruise control main switch (OFF) | | | | | | |
| Set/decel (PRESSED) | | | ○ | | | ○ |
| Resume/accel (PRESSED) | | | ○ | | ○ | |
| Cancel (PRESSED) | | | ○ | ▶ | ○ | ○ |

5. Check for continuity between terminals No. 1, No. 2, and No. 3 on the switch. There should be continuity. If a failure occurs between terminals No. 1, No. 2, and No. 3, replace the cruise control combination switch.
6. Check for continuity between terminals No. 4 and No. 10 on the switch. There should be continuity. If a failure occurs between terminals No. 4 and No. 10, replace the cruise control combination switch.



BACK

Protected by AR

# Engine Mechanical


**Engine Assembly**

Special Tools ..... 5-2
Engine Removal ..... 5-3
Engine Installation ..... 5-11
Side Engine Mount Replacement ..... 5-20
Transmission Mount Replacement ..... 5-22
Lower Torque Rod Replacement ..... 5-24
Upper Torque Rod Replacement ..... 5-25
Side Engine Mount Bracket Replacement ..... 5-26

**Cylinder Head ..... 6-1**

**Engine Block ..... 7-1**

**Engine Lubrication ..... 8-1**

**Intake Manifold and Exhaust System ..... 9-1**

Protected by AR

# Engine Assembly

## Special Tools

| Ref. No. | Tool Number | Description | Qty |
|---|---|---|---|
| ① | 07AAK-SNAA120 | Universal Eyelet | 1 |
| ② | 07AAK-SNAA500 | 1.8 Support Bolt | 2 |
| ③ | 07AAK-SNAA600 | RDX Engine Support Eyelet | 1 |
| ④ | 07AAK-STKA120 | RDX Engine Support Mount Pads | 2 |

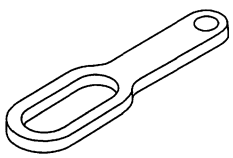

①

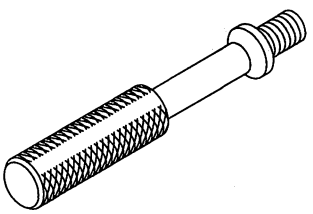

②

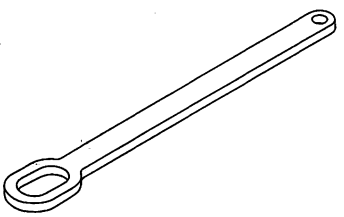

③

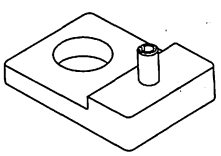

④



BACK

Protected by AR

# Engine Removal

**Special Tools Required**
- Universal eyelet 07AAK-SNAA120
- 1.8 support bolt 07AAK-SNAA500
- RDX engine support eyelet 07AAK-SNAA600
- RDX engine support mount pads 07AAK-STKA120
- Front subframe adapter VSB02C000016 *
- Engine support hanger, A and Reds AAR-T-12566 *

* : Available through American Honda Tool and Equipment Program, 1-888-424-6857

NOTE:
- Use fender covers to avoid damaging painted surfaces.
- To avoid damaging the wiring and terminals, unplug the wiring connectors carefully while holding the connector portion.
- Mark all wiring and hoses to avoid misconnection. Also, be sure that they do not contact other wiring or hoses, or interfere with other parts.

1. Make sure you have the anti-theft code for the audio system and the navigation system (if equipped), then write down the audio presets.

2. Secure the hood in the wide open position (support rod in the lower hole).

3. Relieve the fuel pressure (see page 11-362).

4. Disconnect the negative cable from the battery first, then disconnect the positive cable.

5. Remove the battery.

6. Remove the air cleaner housing assembly (see page 11-394).

7. Remove the relay block (A) and harness clamps (B).

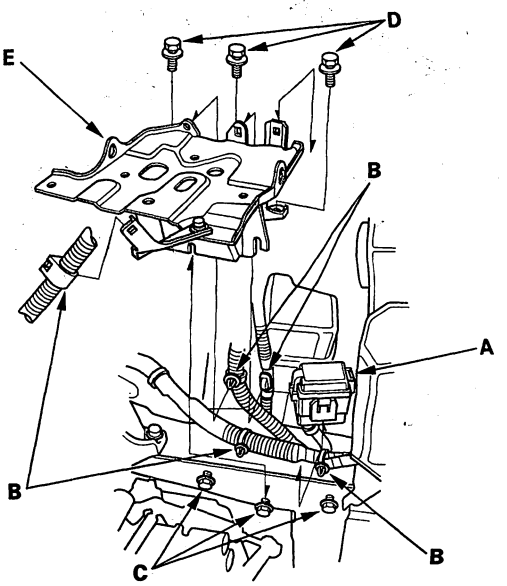


8. Loosen the bolts (C), and remove the bolts (D), then remove the battery base (E).

9. Remove the charge air cooler cover (A), then remove the charge air cooler cover front bracket (B).

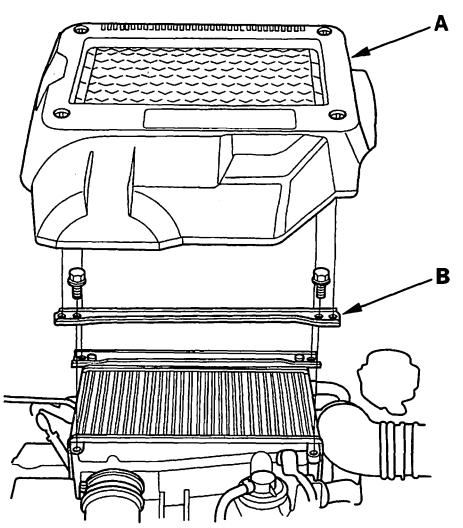


(cont'd)

Protected by AR



## Engine Removal (cont'd)

10. Remove the air bypass outlet pipe (A).

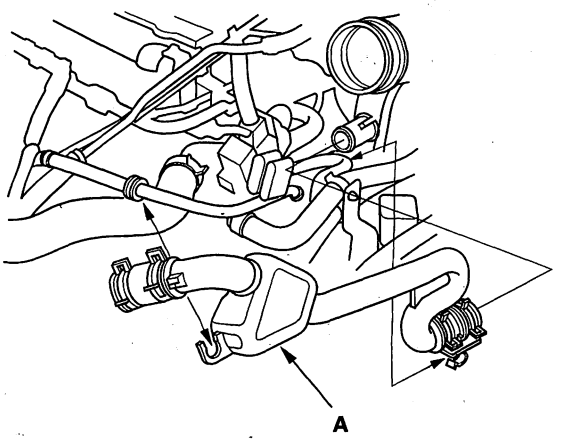


11. Remove the battery cables (A) from the under-hood fuse/relay box.

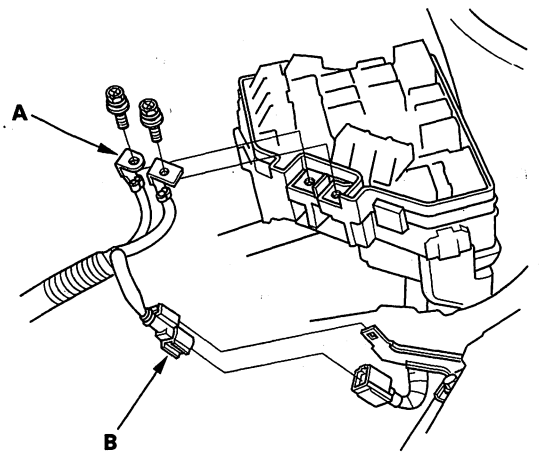


12. Disconnect the harness connector (B).

13. Disconnect the powertrain control module (PCM) connectors (A) and the engine wire harness connector (B).

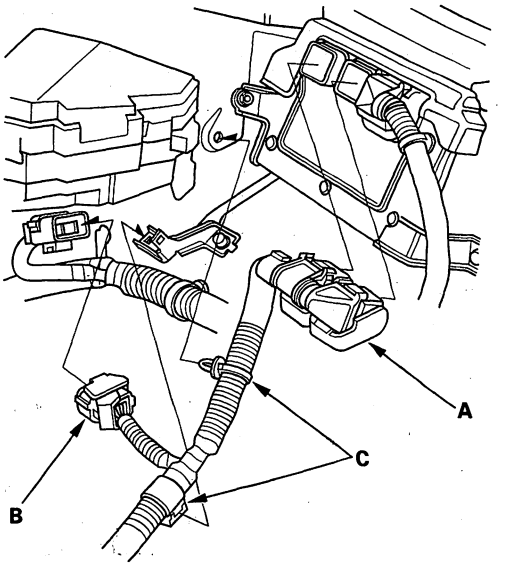


14. Remove the harness clamps (C).

15. Remove the under-hood fuse relay box from the bracket.

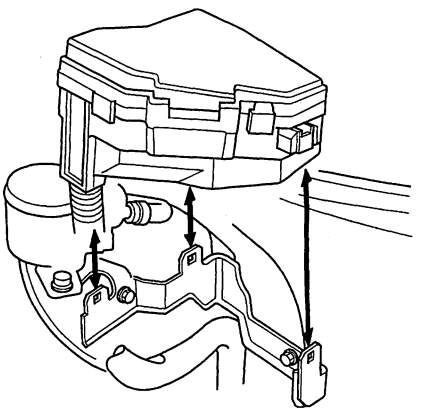



BACK

Protected by AR

16. Remove the quick-connect fitting cover (A), then disconnect the fuel feed hose (see page 11-372).

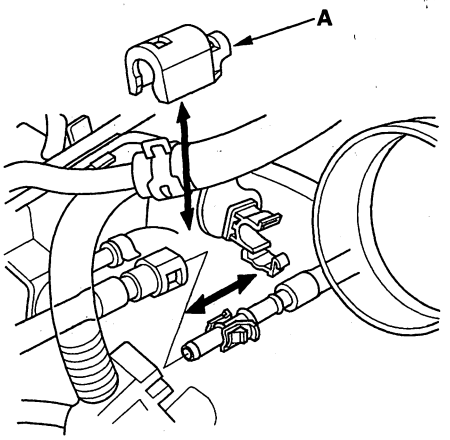


17. Remove the heater hoses from the clamps (A), then remove the bolt (B) securing the heater hose clamp bracket.

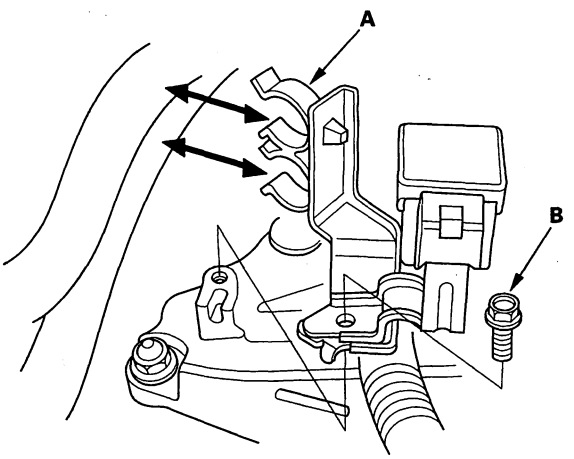


18. Remove the evaporative emission (EVAP) canister hose (A), brake booster vacuum hose (B), and vacuum hose (C).

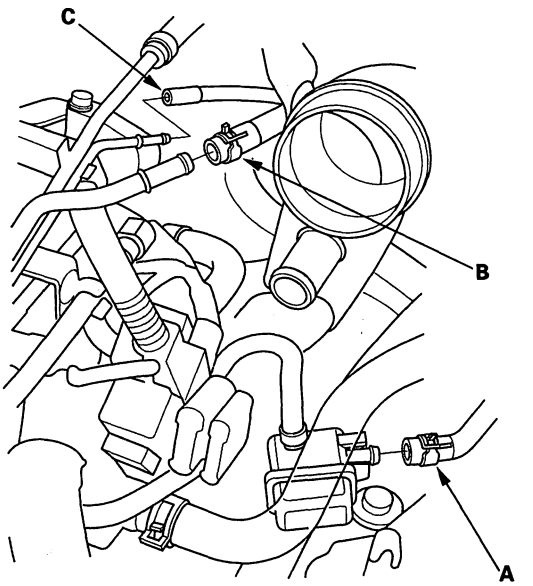


19. Remove the shift cable (see page 14-282).

20. Remove the drive belt (see page 4-31).

21. Remove the power steering (P/S) pump (A) without disconnecting the P/S hoses, then remove the P/S hose from the clamp (B).

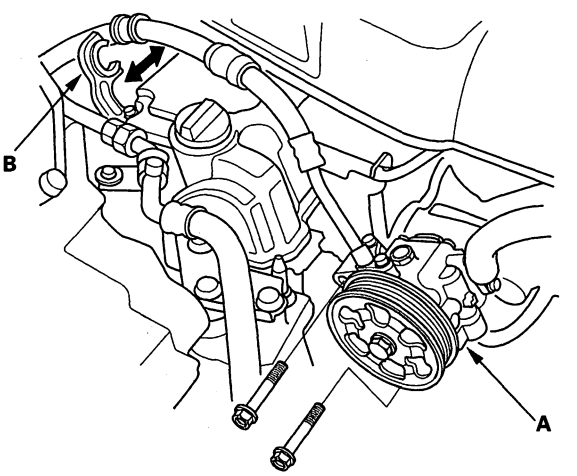


(cont'd)

Protected by AR



## Engine Removal (cont'd)

22. Remove the radiator cap.

23. Raise the vehicle on the lift to full height.

24. Remove the front wheels.

25. Remove the splash shield.

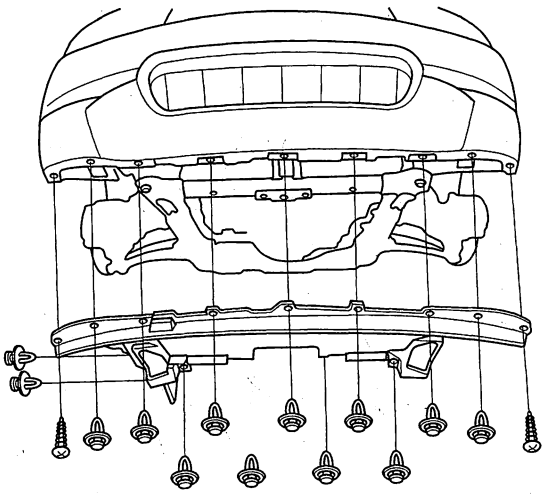

26. Loosen the drain plug in the radiator, and drain the engine coolant (see page 10-7).

27. Drain the engine oil (see page 8-9).

28. Drain the automatic transmission fluid (ATF) (see page 14-239).

29. Remove the three way catalytic converter (TWC).

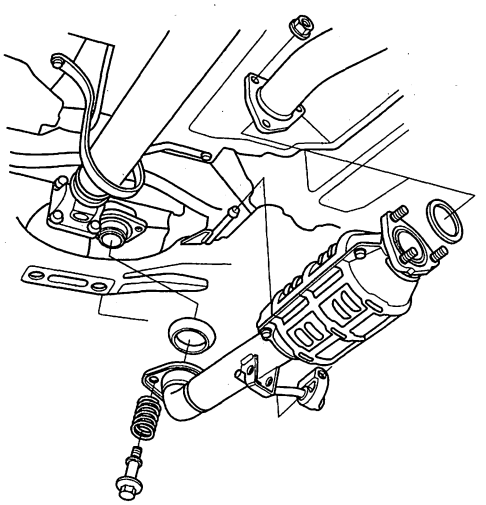

30. Separate the stabilizer links (see page 18-22).

31. Separate the knuckles from the lower arms (see step 12 on page 18-14).

32. Remove the driveshafts (see page 16-4). Coat all precision-finished surfaces with clean engine oil. Tie plastic bags over the driveshaft ends.

33. Remove the propeller shaft from the transfer shaft flange (see page 16-38).

34. Remove the bolt (A) securing the P/S fluid line bracket, and unclamp the P/S fluid line clamps (B) on the front subframe.

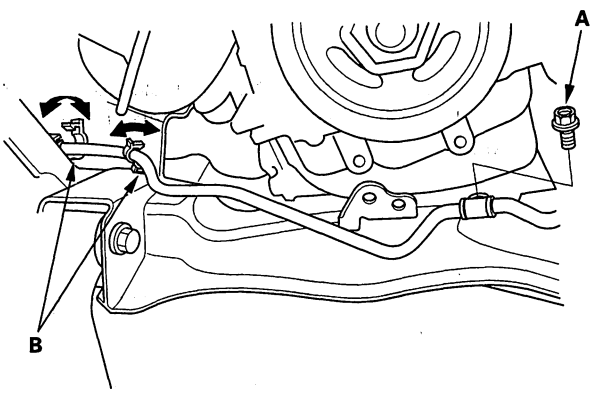


35. Remove the bolts securing the steering gearbox mounting brackets.

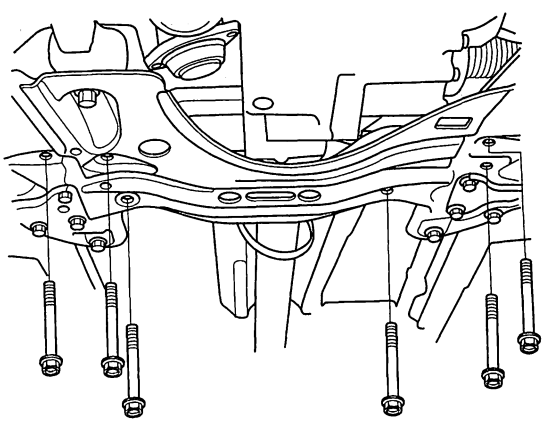

36. Lower the vehicle on the lift.

37. Remove the radiator (see page 10-19).



BACK

Protected by AR

38. Disconnect the A/C compressor clutch connector (A), then remove the A/C compressor (B) without disconnecting the A/C hoses.

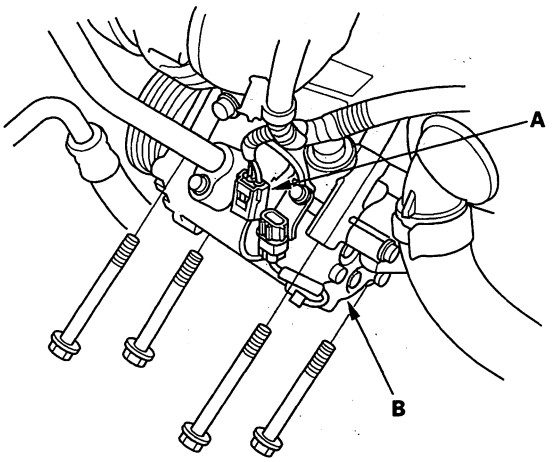


39. Remove the heater hoses.

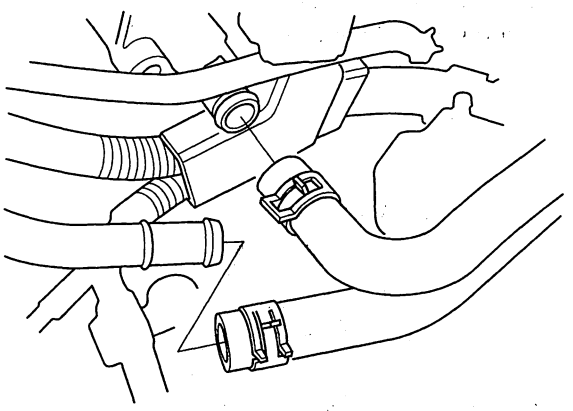

40. Remove the automatic transmission fluid (ATF) cooler hoses (A), then plug the line and hose.

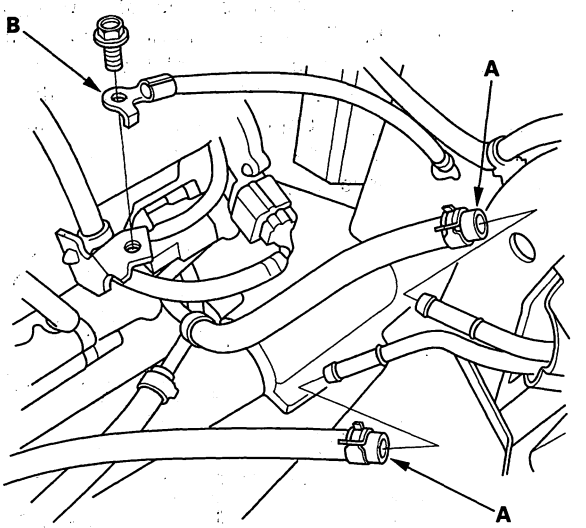


41. Remove the ground cable (B).

42. Attach the engine support eyelet with the support bolt.

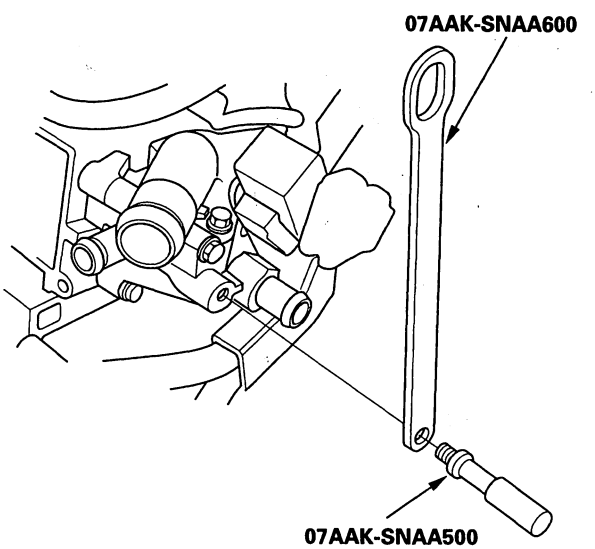


(cont'd)

Protected by AR



## Engine Removal (cont'd)

43. Remove the top corner clip (A) from the front grill on both sides. Place the engine support mount pads over the hood edge cushions (B), and align the pins with the clip hole (C). Remove the lids from both side of the cowl cover. Install the engine support hanger (AAR-T-12566), then attach the hook to the engine support eyelet. Tighten the wing nut (D) by hand to lift and support the engine/ transmission assembly.

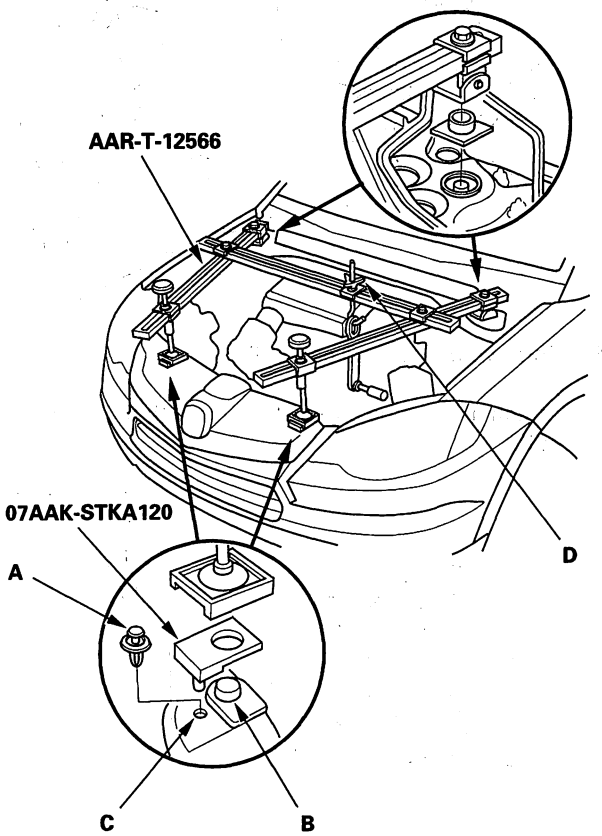


44. Raise the lift to full height.

45. Remove the lower torque rod.

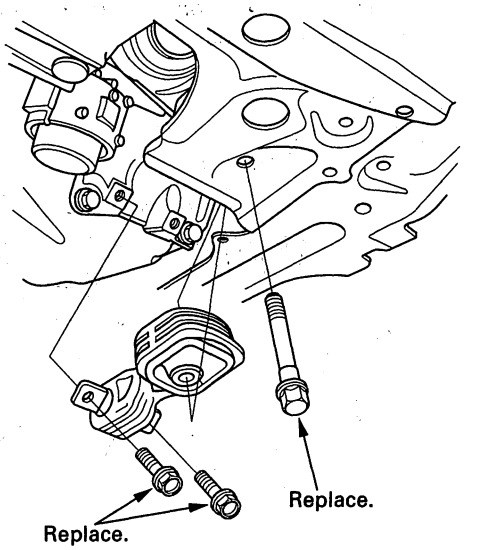


46. Make reference marks on the body across the marks (A) on the edge of the front subframe (B).

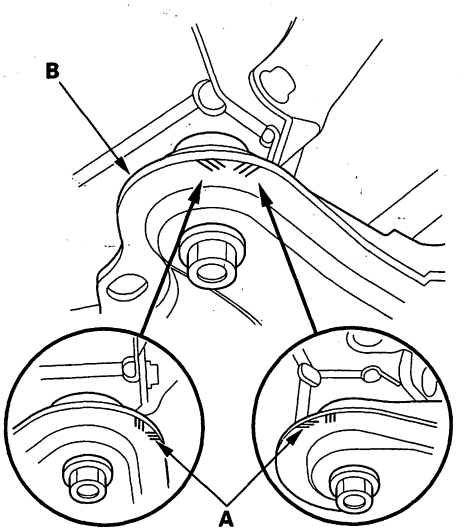




BACK

Protected by AR

47. Attach the subframe adapter (A) to the subframe and hang the belt of the subframe adapter over the front of the subframe, then secure the belt with its stop.

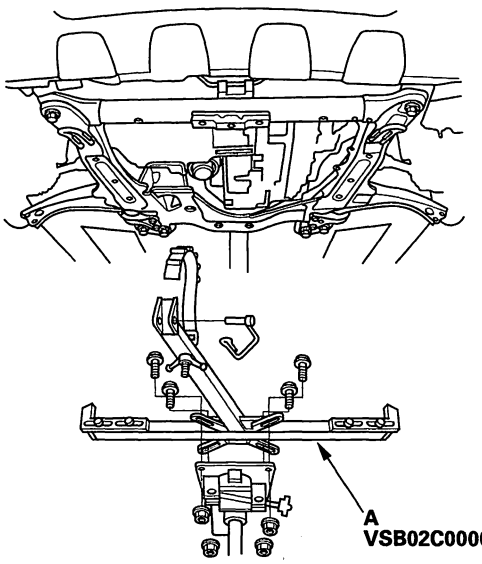


48. Raise the jack and line up the slots in the arms with the bolt holes on the corner of the jack base, then attach them with bolts securely.

49. Remove the subframe.

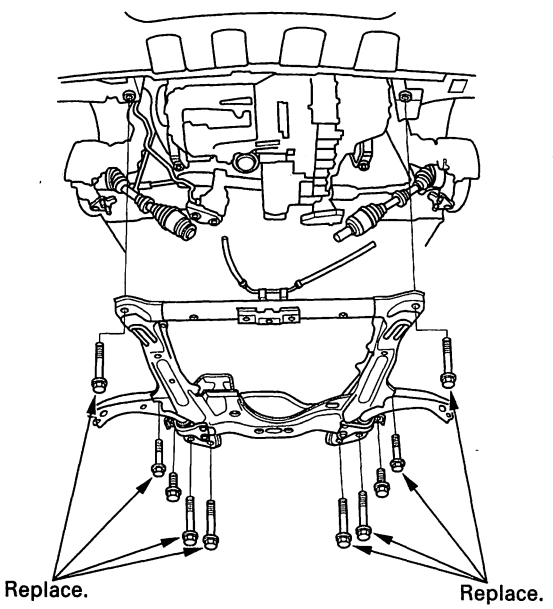


50. Hang the steering gearbox with a rope.

51. Lower the vehicle on the lift.

52. Remove the harness clamps (A), then remove the transmission mount (B).

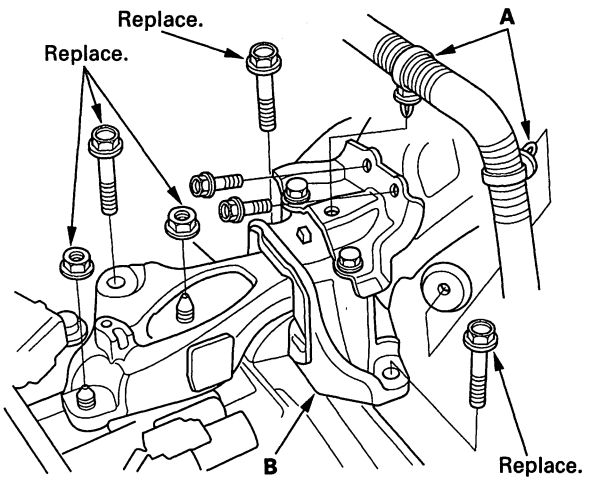


53. Install the transmission hanger bracket (P/N 21232-RCT-A00) (A) and washer (B) on the transmission.

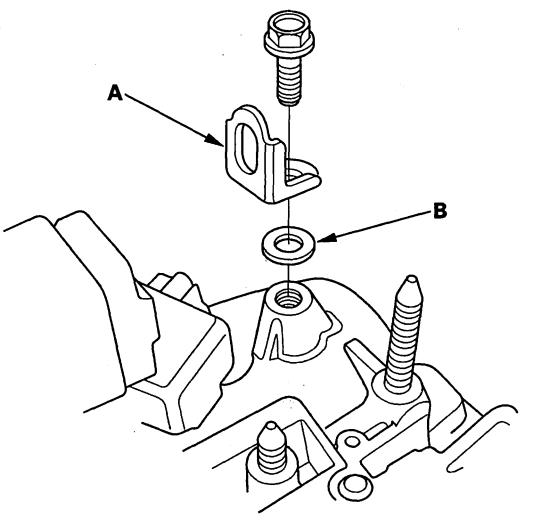


(cont'd)

Protected by AR



## Engine Removal (cont'd)

54. Attach the universal eyelet to the drive belt auto-tensioner.

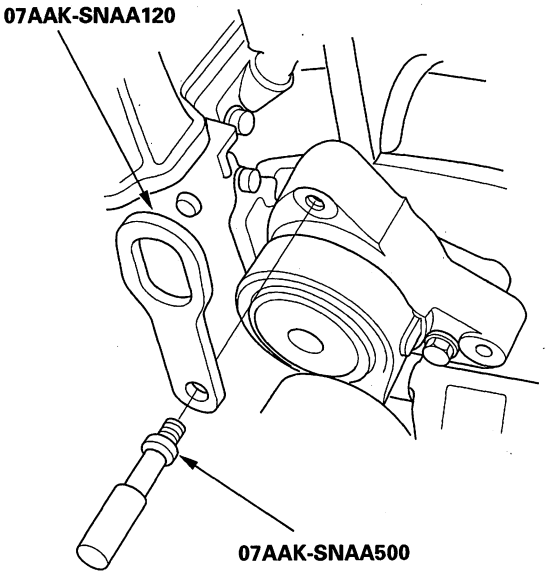


55. Attach a chain hoist (A) to the universal eyelet (B), and the transmission hook (C). Lift up on the engine/transmission assembly until it's securely supported by the chain hoist, and remove the engine hanger.

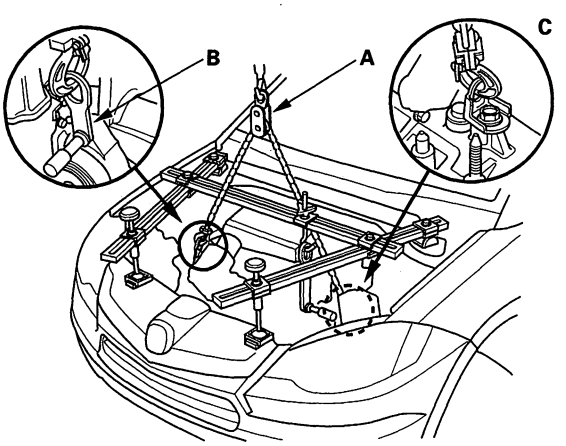


56. Remove the side engine mount bracket mounting bolt and nut.

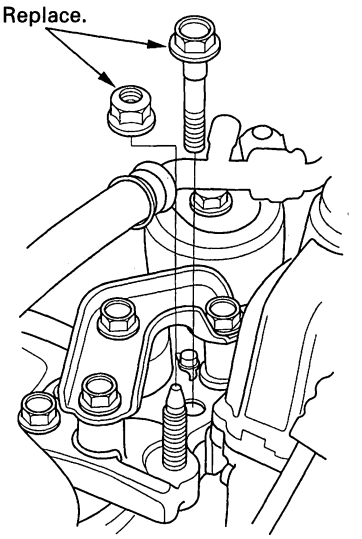


57. Check that the engine/transmission is completely free of vacuum hoses, fuel and coolant hoses, and electrical wiring.

58. Slowly lower the engine/transmission assembly about 150 mm (6 in.). Check once again that all hoses and electrical wiring are disconnected and free from the engine/transmission, then lower it all the way.

59. Disconnect the chain hoist from the engine/transmission assembly.

60. Raise the vehicle all the way on the lift, and remove the engine/transmission assembly from under the vehicle.



BACK

Protected by AR

## Engine Installation

**Special Tools Required**
- Universal eyelet 07AAK-SNAA120
- 1.8 support bolt 07AAK-SNAA500
- RDX engine support eyelet 07AAK-SNAA600
- RDX engine support mount pads 07AAK-STKA120
- Front subframe adapter VSB02C000016 *
- Engine support hanger, A and Reds AAR-T-12566 *

* : Available through American Honda Tool and Equipment Program, 1-888-424-6857

1. Install the accessory brackets and tighten their bolts to the specified torques.

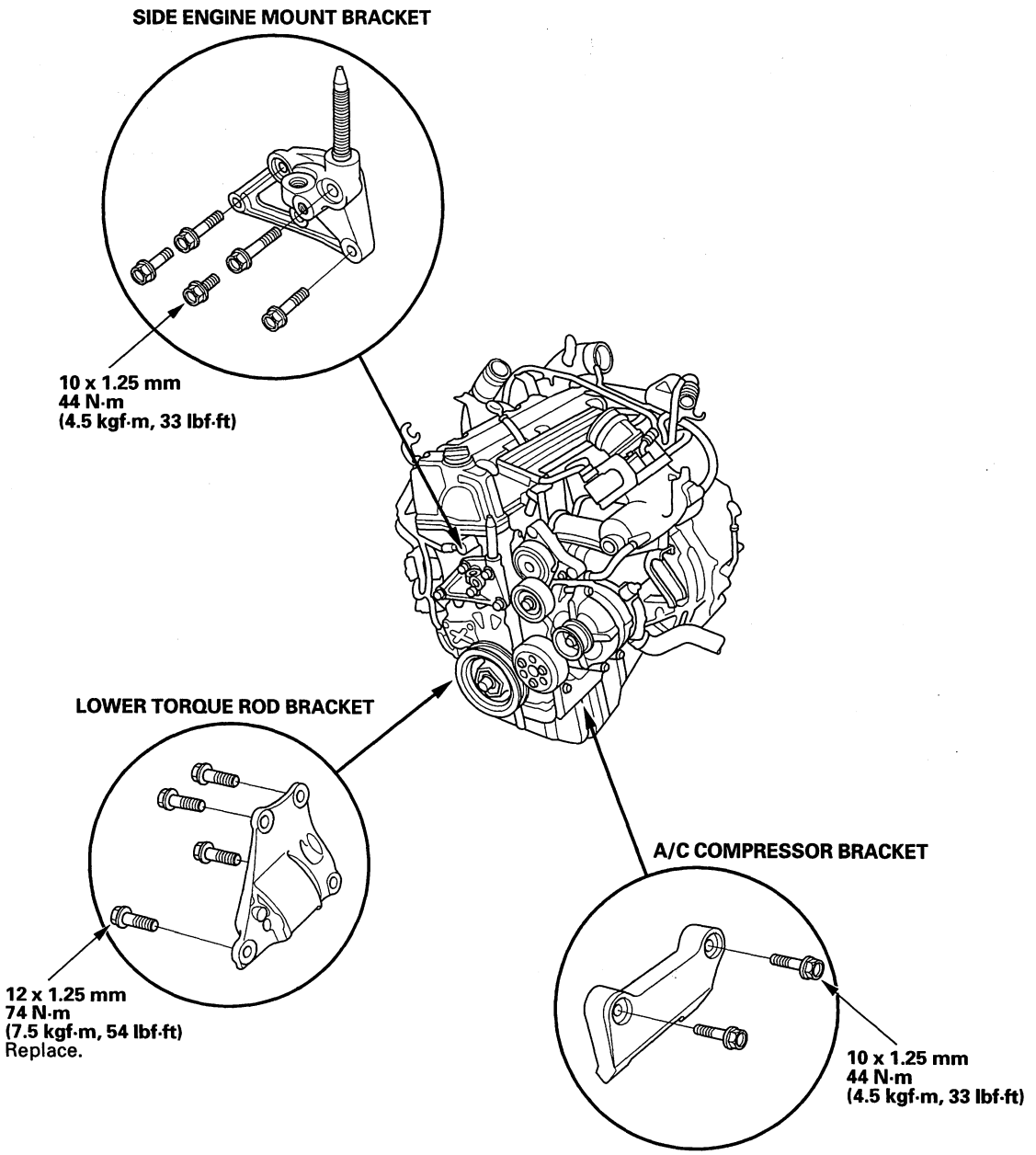


(cont'd)

Protected by AR



## Engine Installation (cont'd)

2. Raise the vehicle on the lift, and position the engine/transmission assembly under the vehicle. Lower the vehicle, and attach the universal eyelet and chain hoist to the engine, then lift the engine into position in the vehicle.

   NOTE: Reinstall the mounting bolts/support nuts in the sequence given in the following steps. Failure to follow this sequence may cause excessive noise and vibration, and reduce engine mount life.

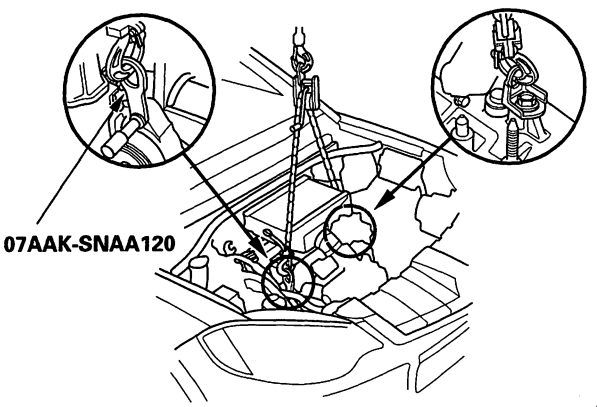


3. Attach the engine support eyelet with the support bolt.

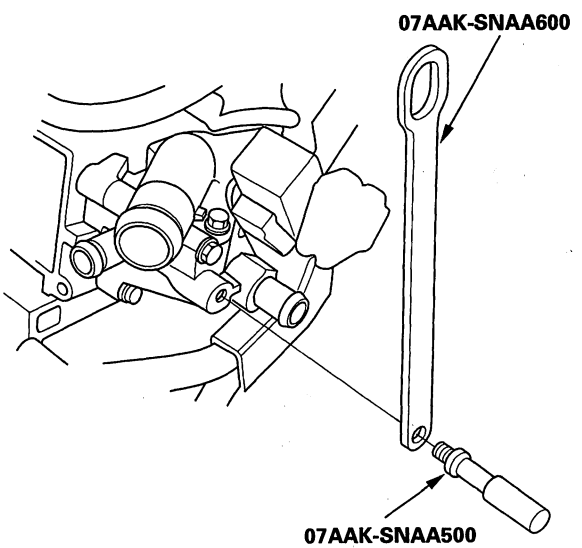


4. Place the engine support mount pads over the hood edge cushions (A), and align the pins with the clip hole (B). Remove the lids from both side of the cowl cover. Install the engine support hanger (AAR-T-12566), then attach the hook to the engine support eyelet. Tighten the wing nut (C) by hand to lift and support the engine/transmission assembly.

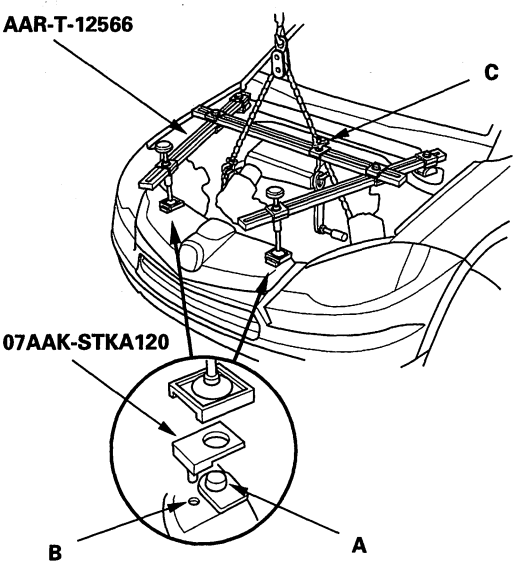


5. Loosen the upper torque rod mounting bolt (A).

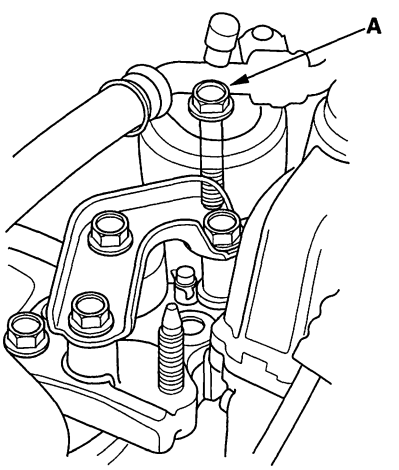




BACK

Protected by AR

6. Tighten the new side engine mount bracket mounting bolt and nut.

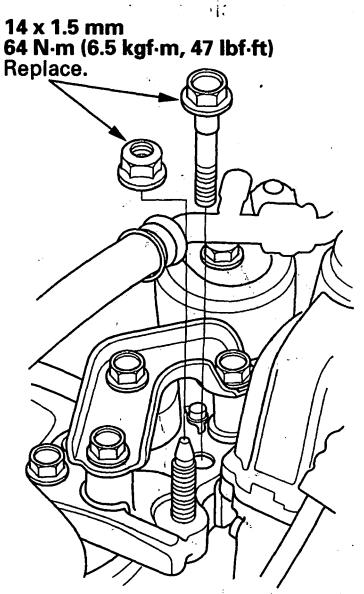


7. Remove the chain hoist.

8. Remove the universal eyelet from the drive belt auto-tensioner.

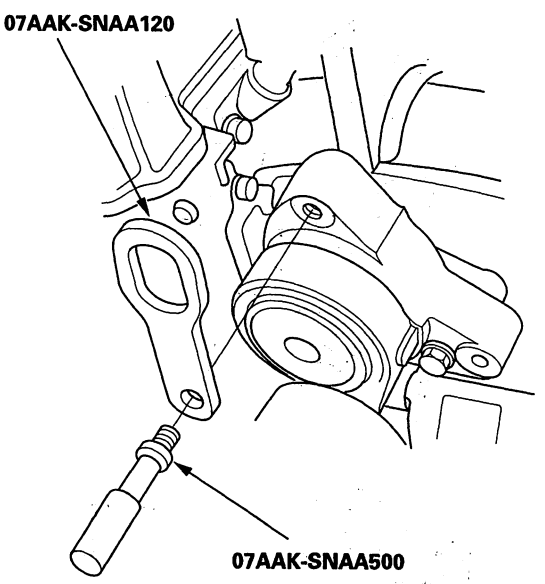


9. Remove the transmission hanger bracket (P/N 21232-RCT-A00).

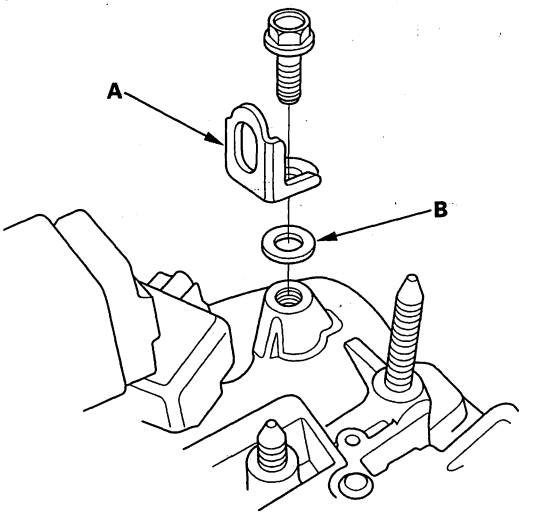


10. Install the transmission mount, then tighten the transmission mount stiffener mounting bolts (A) and the new transmission mount mounting bolts (B).

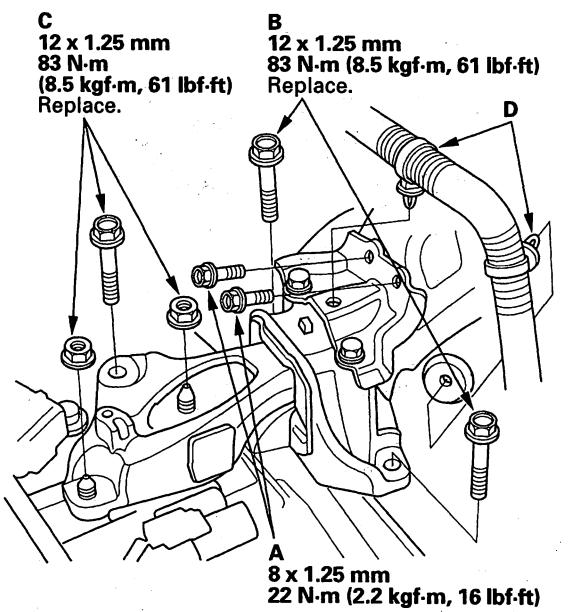


11. Tighten the new bolt and nuts (C).

12. Install the harness clamps (D).

(cont'd)

Protected by AR



## Engine Installation (cont'd)

13. Raise the vehicle on the lift to full height.

14. Using the subframe adapter (A) and a jack, raise the subframe up to body.

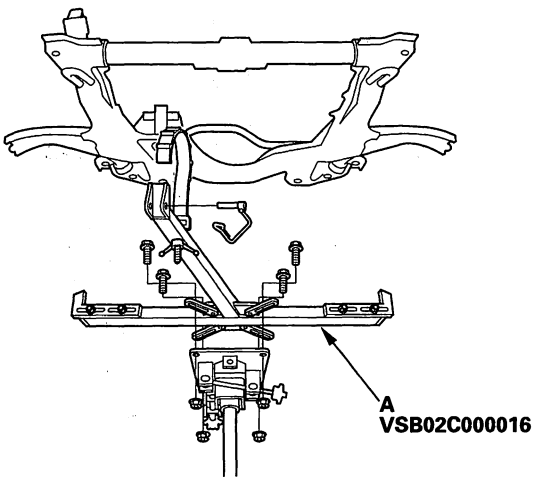


15. Loosely install the new 14 x 1.5 mm bolts (A), and loosely install the 12 x 1.25 mm bolts (B).

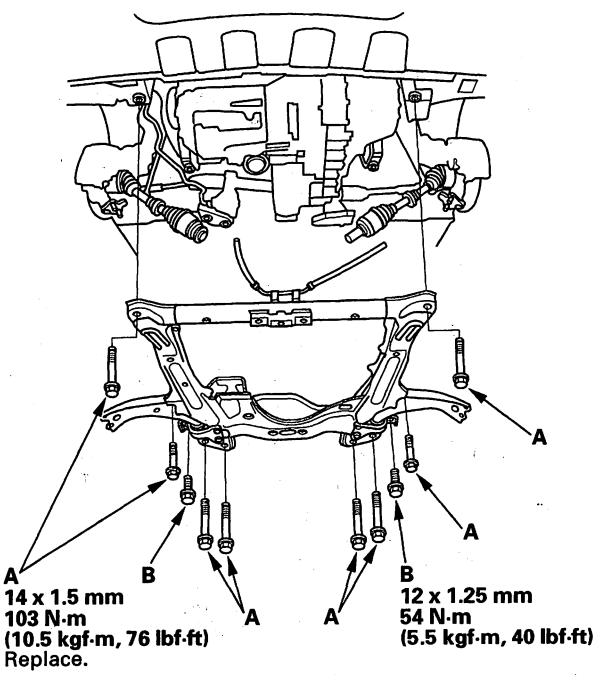


16. Align all reference marks (A) on the front subframe (B) with the body, then tighten the bolts on the front subframe to the specified torque.

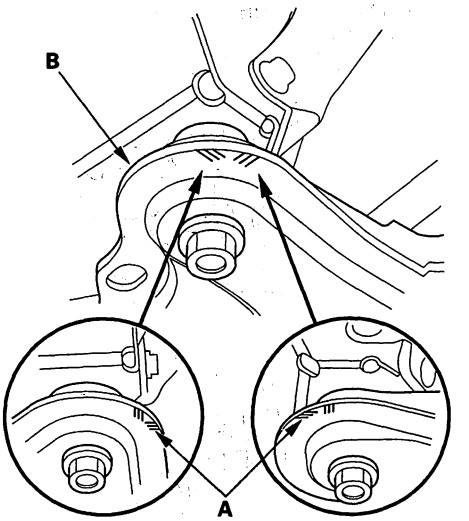


17. Remove the jack and front subframe adapter.

18. Install the lower torque rod, then tighten the new lower torque rod mounting bolts in the numbered sequence shown.

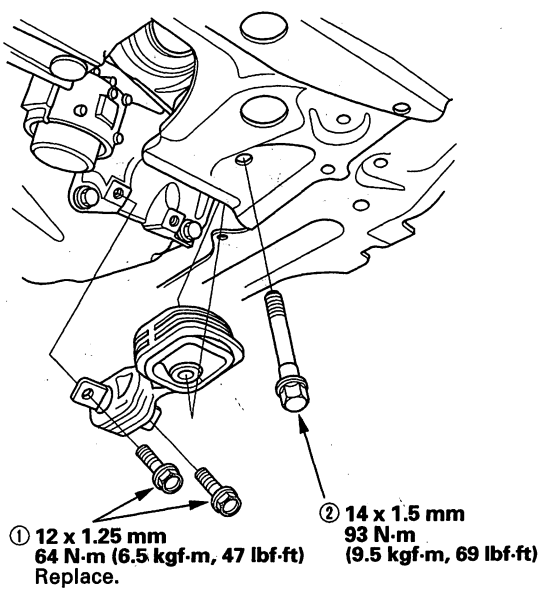




BACK

Protected by AR

19. Lower the vehicle on the lift.

20. Remove the special tools from the engine and vehicle, then install the top corner clip to the front grille on both sides.

21. Tighten the upper torque rod mounting bolt.

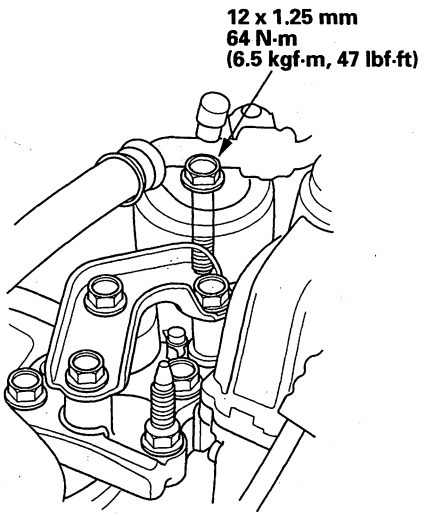


22. Raise the vehicle on the lift to full height.

23. Install the bolts securing the steering gearbox mounting brackets.

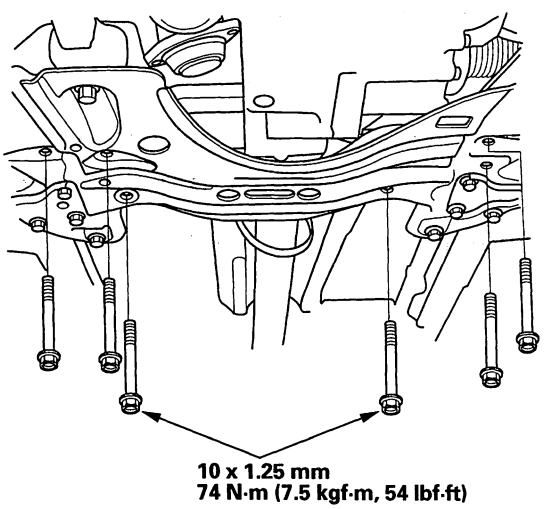


24. Install the power steering (P/S) fluid line bracket (A), and secure the hose with the hose clamps (B).

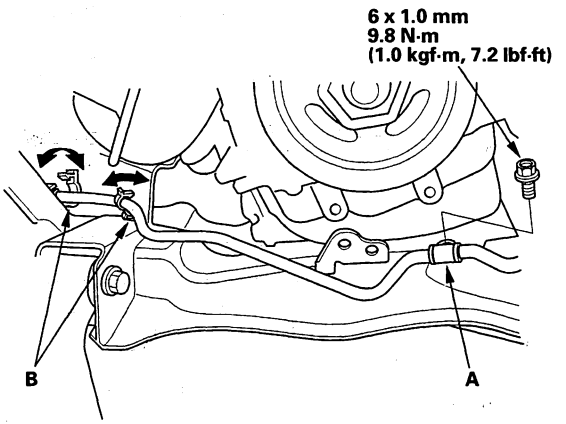


25. Install the propeller shaft to the transfer shaft flange (see page 16-39).

26. Install a new set ring on the end of each driveshaft, then install the driveshafts. Make sure each ring "clicks" into place in the differential and intermediate shaft.

27. Connect the lower arms to the knuckles (see step 8 on page 18-20).

28. Connect the stabilizer links (see page 18-22).

29. Install the three way catalytic converter (TWC) (A). Use new gaskets (B) and new self-locking nuts (C).

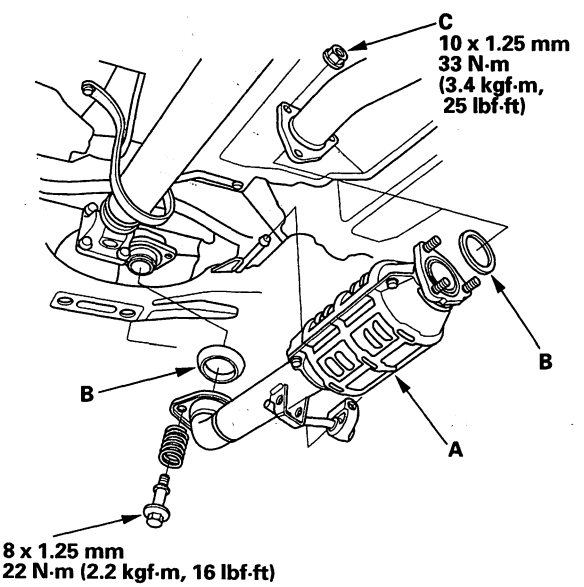


(cont'd)

Protected by AR



## Engine Installation (cont'd)

30. Install the splash shield.

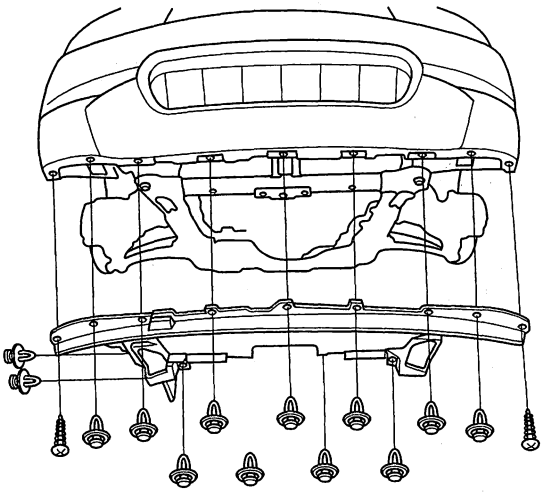

31. Install the front wheels.

32. Lower the vehicle on the lift.

33. Install the automatic transmission fluid (ATF) cooler hoses (A), and secure the hoses with the clips (B) (see page 14-273).

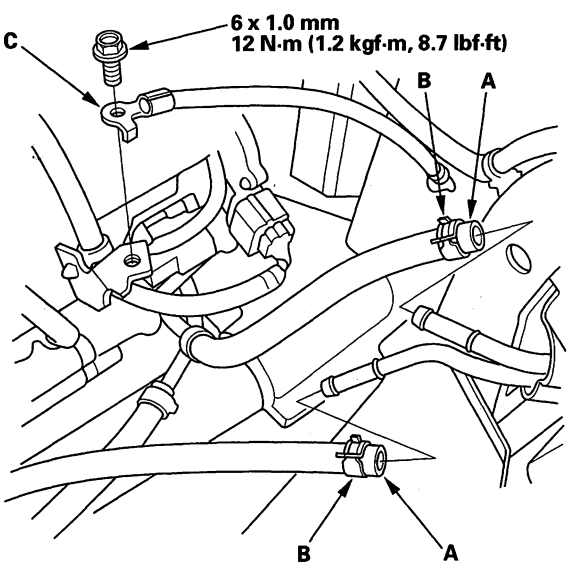


34. Install the ground cable (C).

35. Install the heater hoses.

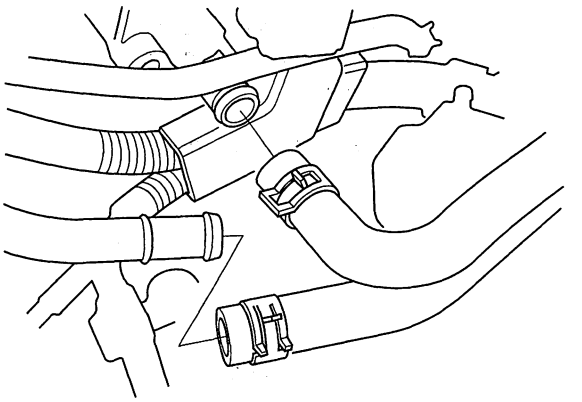

36. Install the A/C compressor (A), then connect the A/C compressor clutch connector (B).

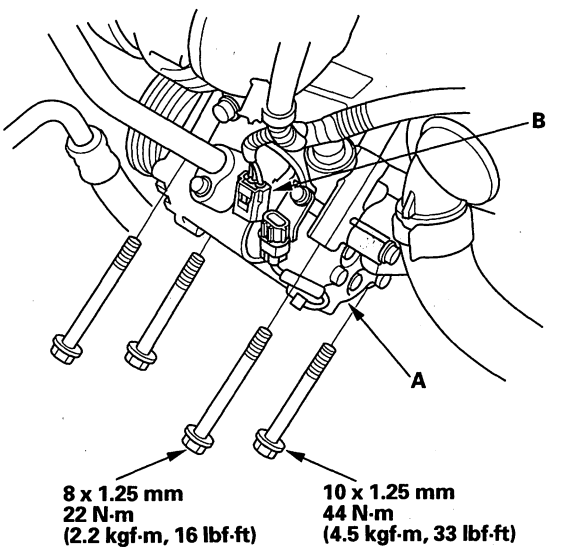


37. Install the radiator (see page 10-19).



BACK

Protected by AR

38. Install the P/S pump (A), then install the P/S hose to the clamp (B).

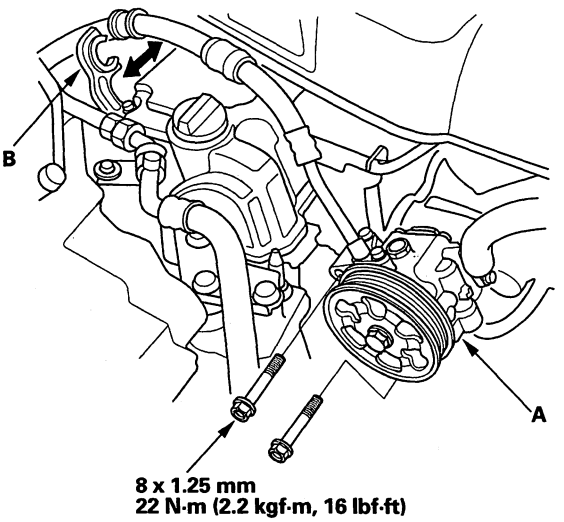


39. Install the drive belt (see page 4-31).

40. Install the shift cable (see page 14-282).

41. Install the evaporative emission (EVAP) canister hose (A), brake booster vacuum hose (B), and vacuum hose (C).

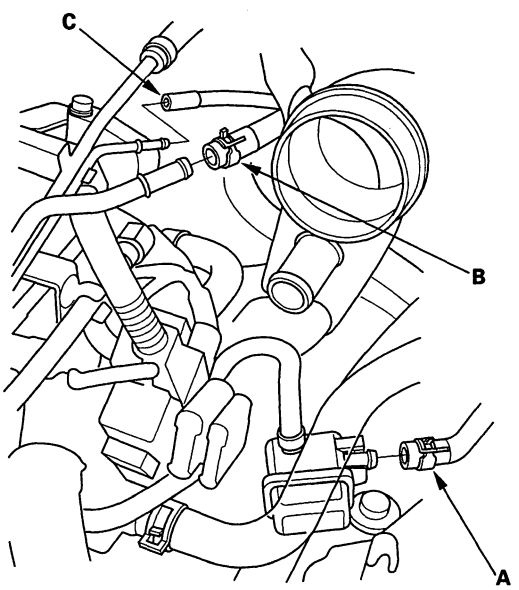


42. Install heater hose clamp bracket (A), then install the heater hoses to the clamps (B).

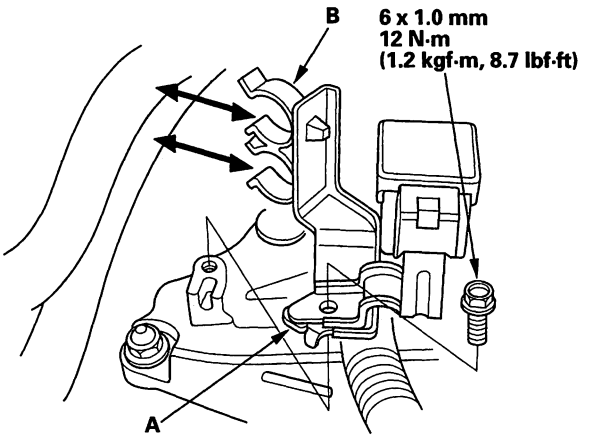


43. Connect the fuel feed hose (see page 11-374), then install the quick-connect fitting cover (A).

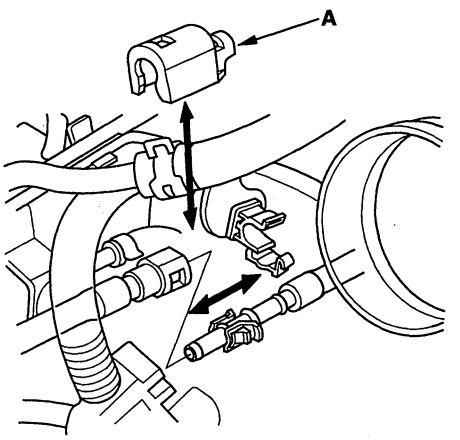


(cont'd)

Protected by AR



## Engine Installation (cont'd)

44. Install the under-hood fuse relay box to the bracket.

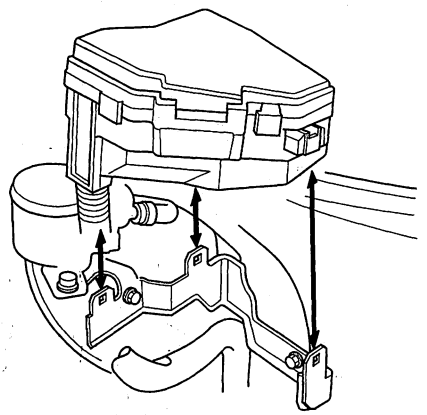

45. Connect the powertrain control module (PCM) connectors (A) and engine wire harness connector (B).

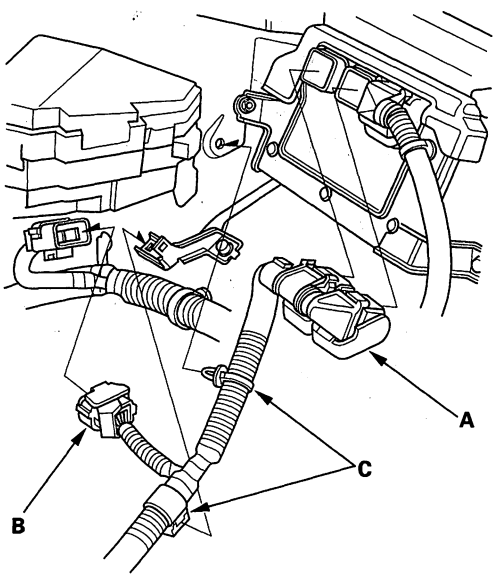


46. Install the harness clamps (C).

47. Install the battery cables (A) to the under-hood fuse/relay box.

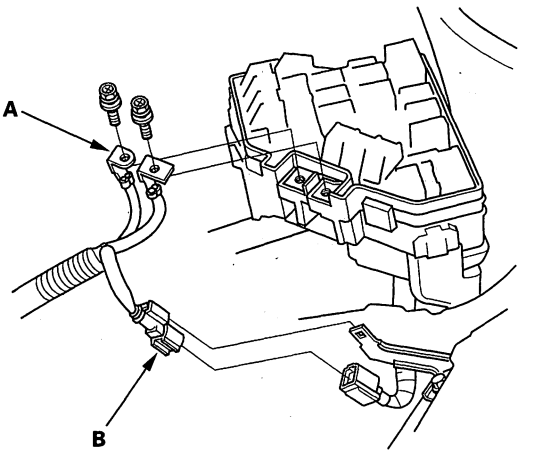


48. Connect the harness connector (B).

49. Install the air bypass outlet pipe (A).

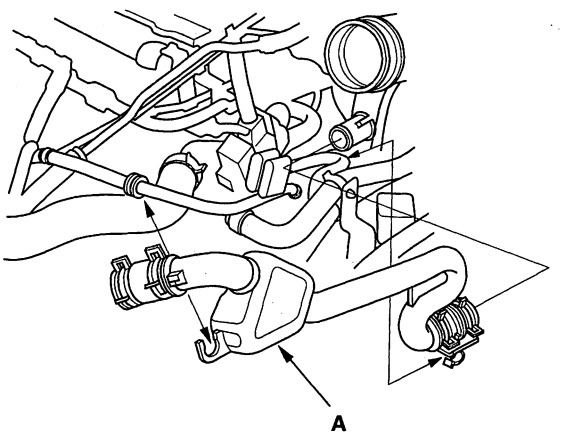




BACK

Protected by AR

50. Install the charge air cooler cover front bracket (A), then install the charge air cooler cover (B).

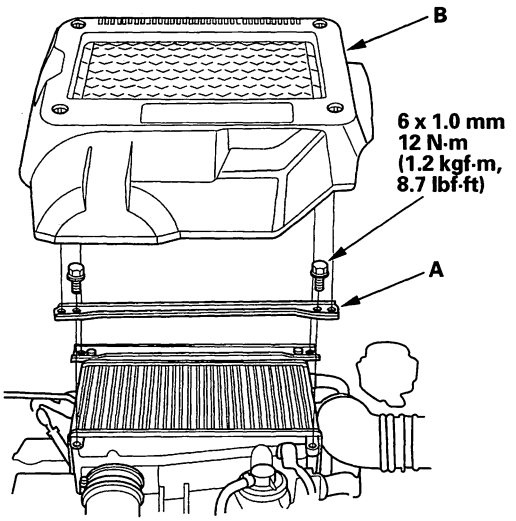


51. Install the battery base (A), then install the harness clamps (B) and relay block (C).

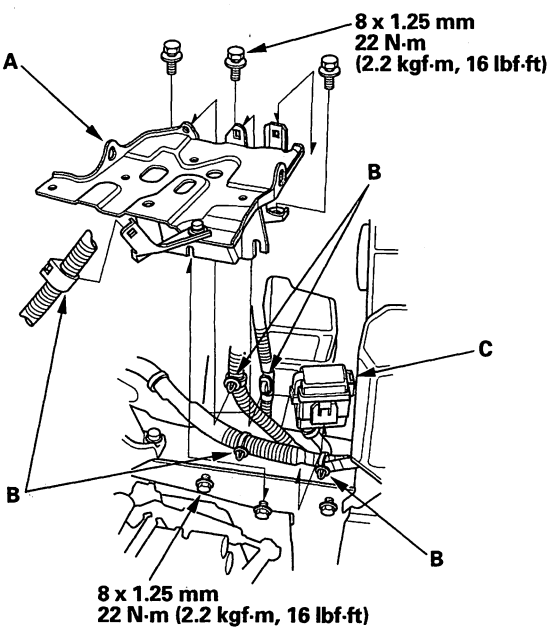


52. Install the air cleaner housing assembly (see page 11-394).

53. Install the battery. Clean the battery posts and cable terminals, then assemble them, and apply grease to prevent corrosion.

54. Move the shift lever to each gear, and verify that the A/T gear position indicator follows the transmission range switch.

55. Inspect for fuel leaks: Turn the ignition switch ON (II) (do not operate the starter) so the fuel pump runs for about 2 seconds and pressurizes the fuel line. Repeat this operation two or three times, then check for fuel leakage at any point in the fuel line.

56. Refill the engine with engine oil (see step 4 on page 8-9).

57. Refill the transmission with ATF (see page 14-239).

58. Refill the radiator with engine coolant, and bleed air from the cooling system with the heater valve open (see step 5 on page 10-7).

59. Do the PCM reset procedure (see page 11-4).

60. Do the crankshaft position (CKP) pattern clear/CKP pattern learn procedure (see page 11-4).

61. Inspect the idle speed (see page 11-338).

62. Inspect the ignition timing (see page 4-19).

63. Check the wheel alignment (see page 18-5).

64. Enter the anti-theft code for the audio system and the navigation system (if equipped), then enter the audio presets.

65. Set the clock.

Protected by AR



## Side Engine Mount Replacement

1. Support the engine with a jack and wood block under the oil pan.

2. Remove the torque rod stiffener (A) and upper torque rod (B).

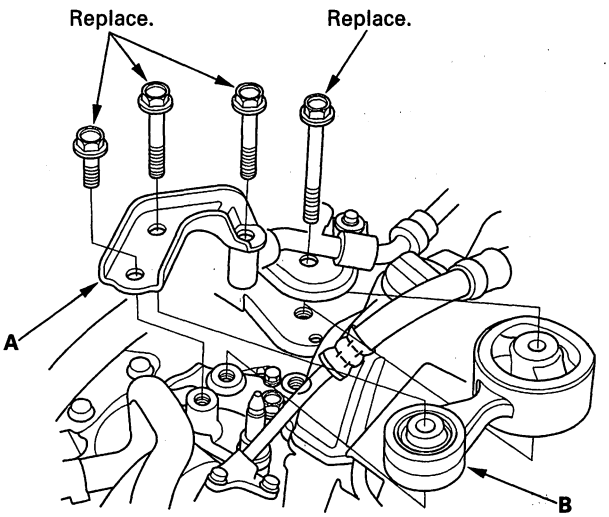


3. Remove the ground cable (A), then remove the side engine mount bracket (B).

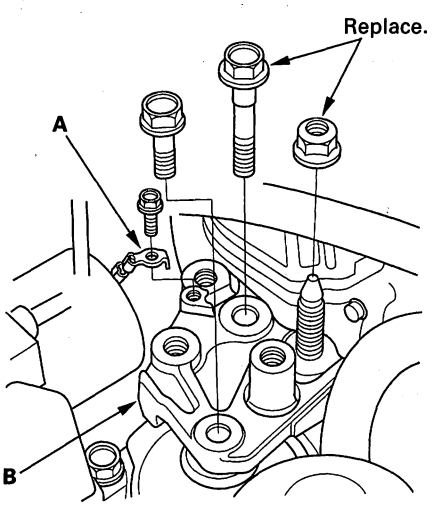


4. Remove the side engine mount stiffener (A), then remove the side engine mount (B).

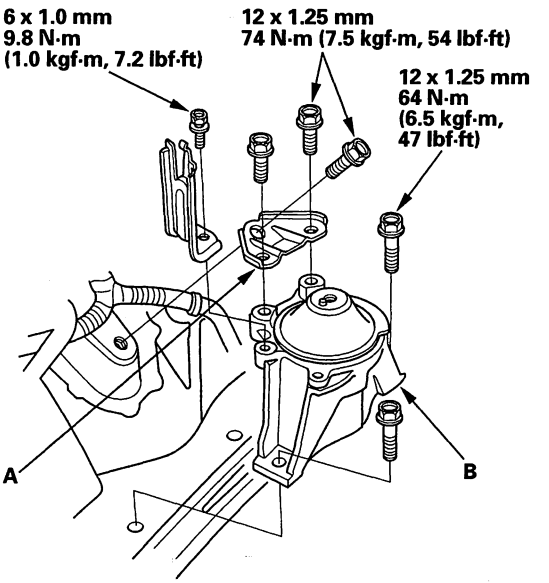


5. Install the side engine mount, then install the side engine mount stiffener.

6. Install the side engine mount bracket (A), then loosely tighten the new bolt and nut (B), and loosely tighten the bolt (C).

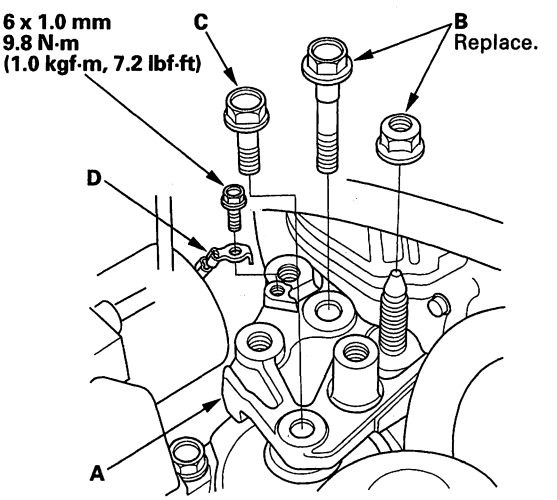


7. Install the ground cable (D).



BACK

Protected by AR

8. Remove the air cleaner housing assembly (see page 11-394).

9. Loosen the transmission mounting bolt and nuts (A).

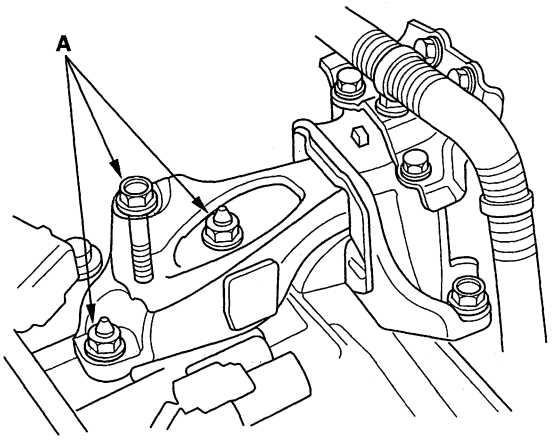


10. Raise the lift to full height.

11. Loosen the lower torque rod mounting bolt (A).

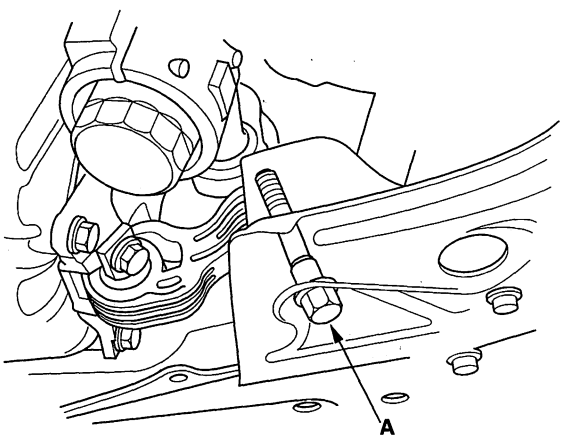


12. Lower the vehicle on the lift.

13. Tighten the side engine mount mounting bolts and nut.

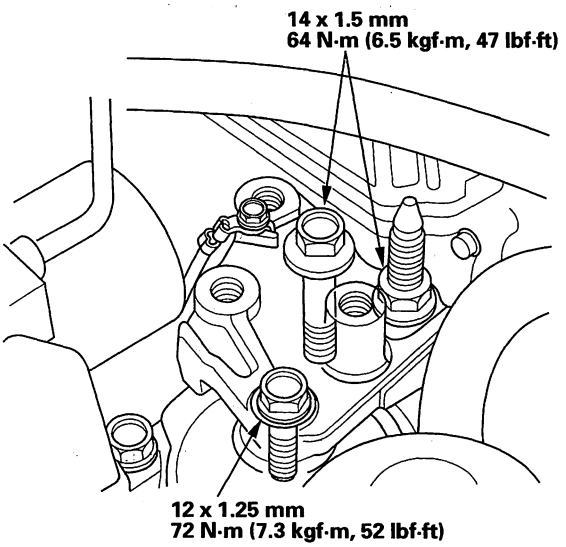


14. Tighten the transmission mounting bolt and nuts.

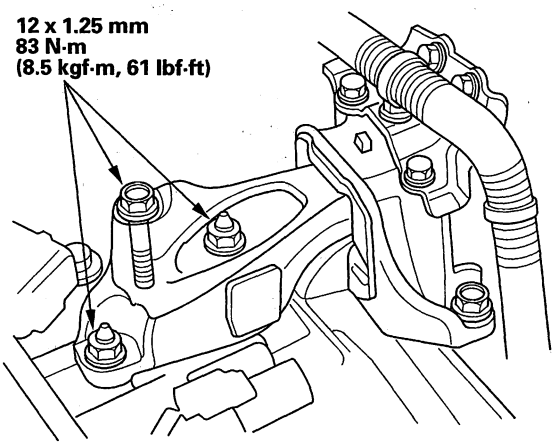


(cont'd)

Protected by AR



## Side Engine Mount Replacement (cont'd)

15. Raise the lift to full height.

16. Tighten the lower torque rod mounting bolt.

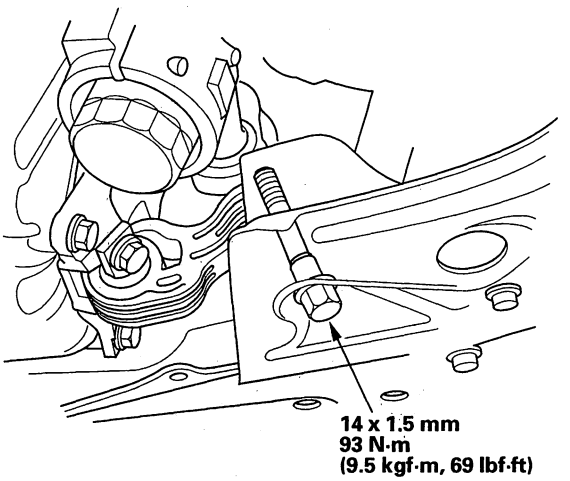


17. Lower the vehicle on the lift.

18. Install the air cleaner housing assembly (see page 11-394).

19. Install the upper torque rod (A) and torque rod stiffener (B), and tighten the new stiffener mounting bolts (C), then tighten the new upper torque rod mounting bolts in the numbered sequence shown.

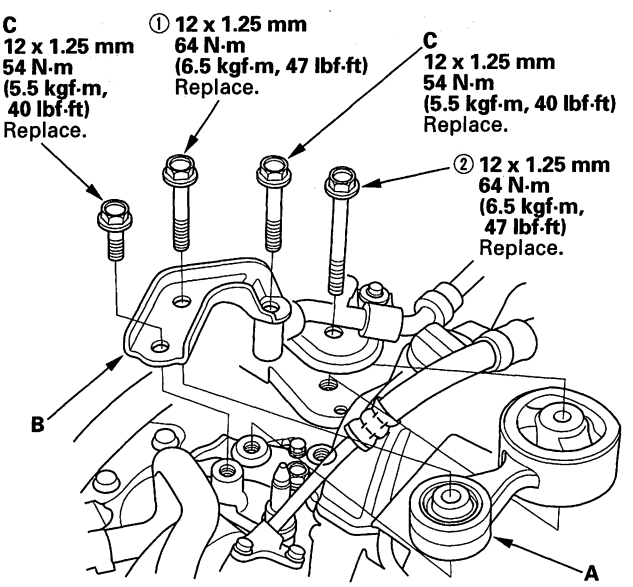


## Transmission Mount Replacement

1. Loosen the upper torque rod mounting bolt (A).

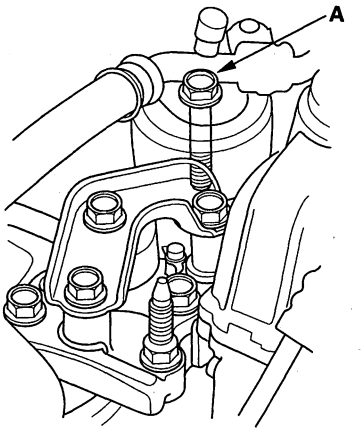


2. Remove the air cleaner housing assembly (see page 11-394).

3. Remove the heater hoses from the clamps (A), then remove the bolt (B) securing the heater hose clamp bracket.

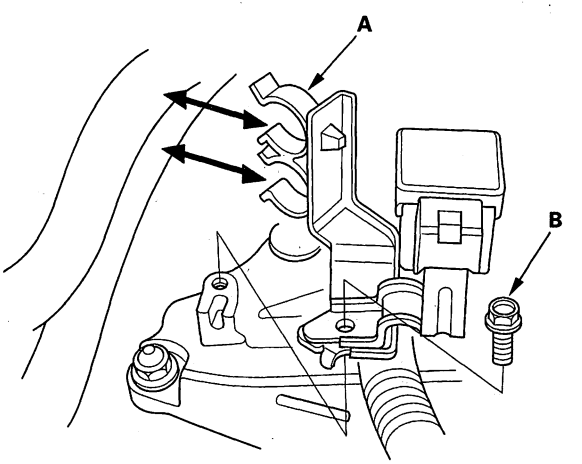


4. Support the transmission with a jack and wood block under the transmission.



BACK

Protected by AR

5. Remove the harness clamps (A), then remove the transmission mount stiffener (B) and transmission mount (C).

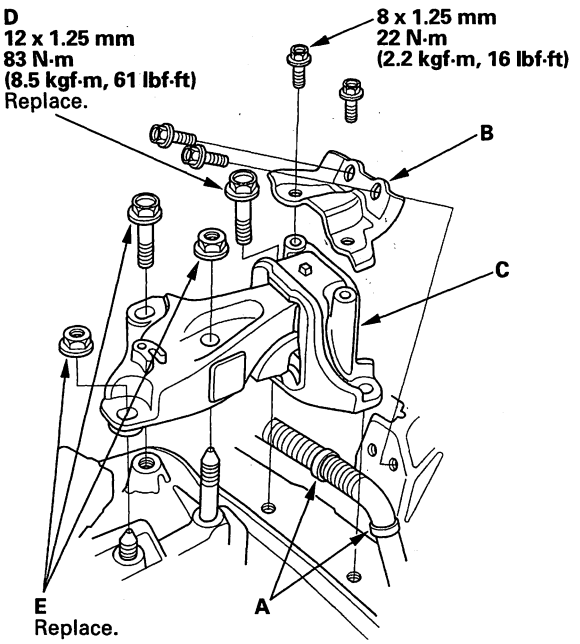


6. Install the transmission mount with the new mounting bolts (D), then install the transmission mount stiffener and harness clamps.

7. Loosely tighten the new bolt and nuts (E).

8. Raise the lift to full height.

9. Loosen the lower torque rod mounting bolt (A).

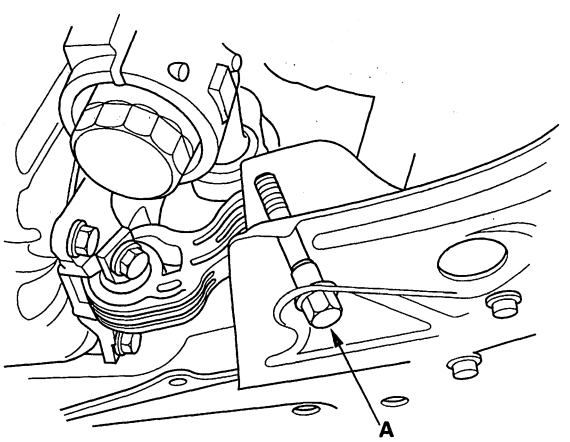


10. Lower the vehicle on the lift.

11. Tighten the transmission mounting bolt and nuts.

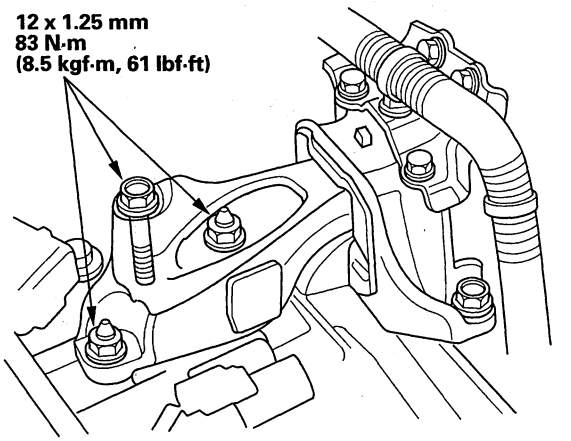


12. Raise the lift to full height.

13. Tighten the lower torque rod mounting bolt.

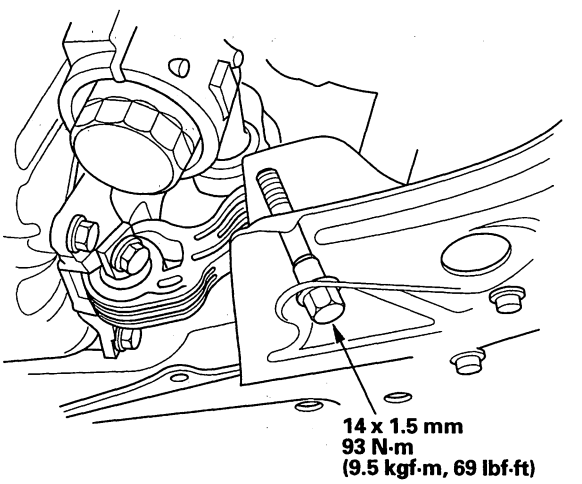


14. Lower the vehicle on the lift.

(cont'd)

Protected by AR



## Transmission Mount Replacement (cont'd)

15. Install heater hose clamp bracket (A), then install the heater hoses to the clamps (B).

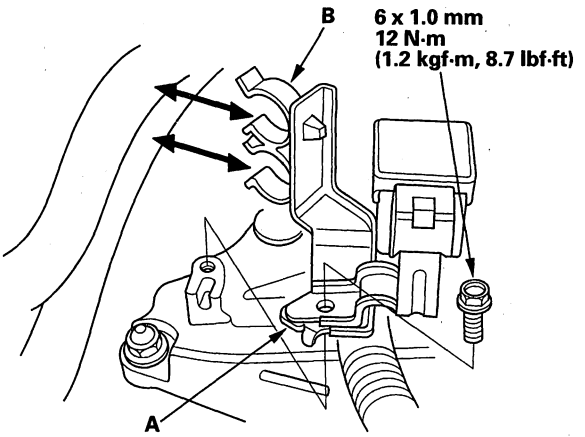


16. Install the air cleaner housing assembly (see page 11-394).

17. Tighten the upper torque rod mounting bolt.

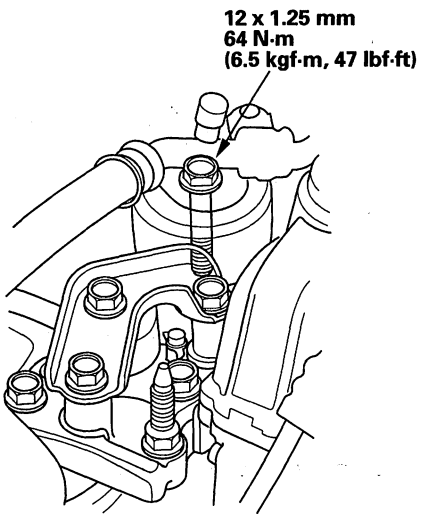


## Lower Torque Rod Replacement

1. Loosen the upper torque rod mounting bolt (A).

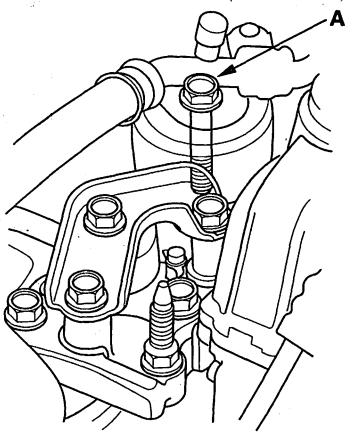


2. Raise the lift to full height.

3. Remove the lower torque rod (A).

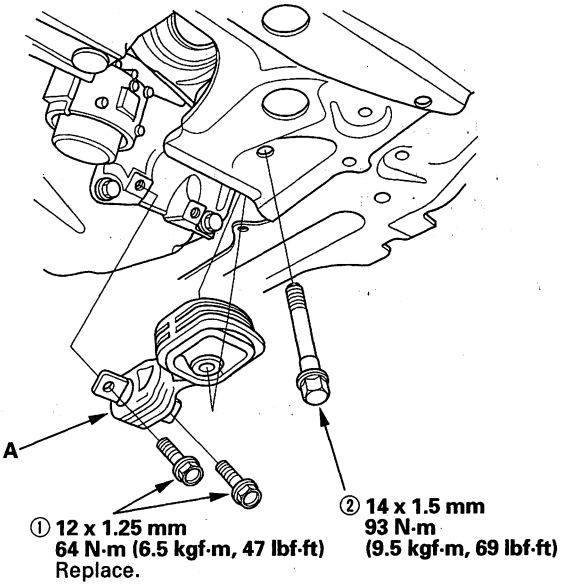


4. Install the lower torque rod, then tighten the new lower torque rod mounting bolts in the numbered sequence shown.



BACK

Protected by AR

5. Lower the vehicle on the lift.

6. Tighten the upper torque rod mounting bolt.

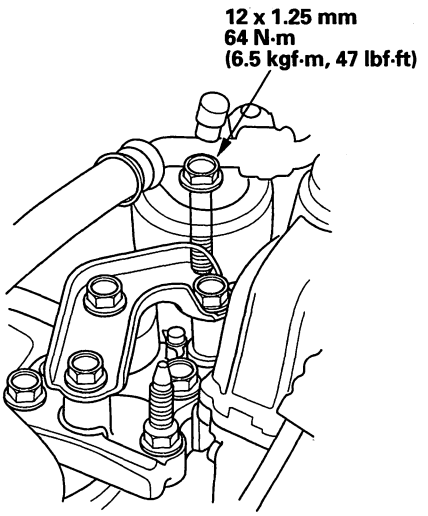


## Upper Torque Rod Replacement

1. Remove the torque rod stiffener (A) and upper torque rod (B).

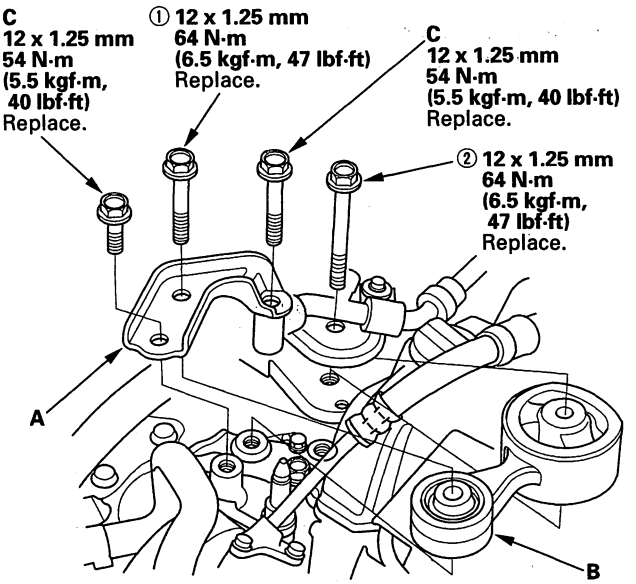


2. Install the upper torque rod and torque rod stiffener, and tighten the new stiffener mounting bolts (C), then tighten the new upper torque rod mounting bolts in the numbered sequence shown.

Protected by AR



## Side Engine Mount Bracket Replacement

1. Support the engine with a jack and wood block under the oil pan.

2. Remove the torque rod stiffener (A) and upper torque rod (B).

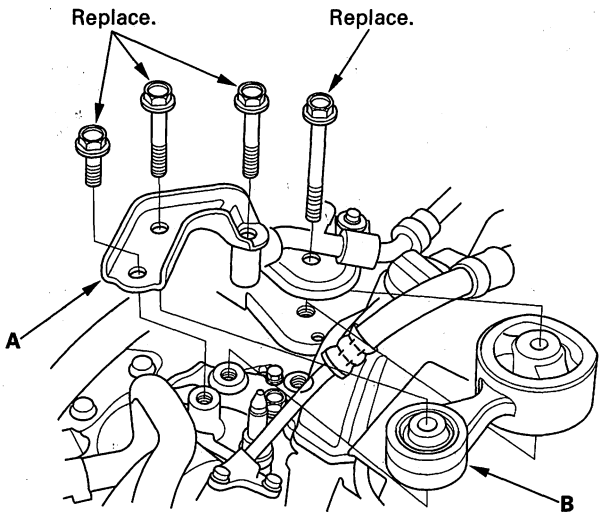


3. Remove the ground cable (A), then remove the side engine mount bracket (B).

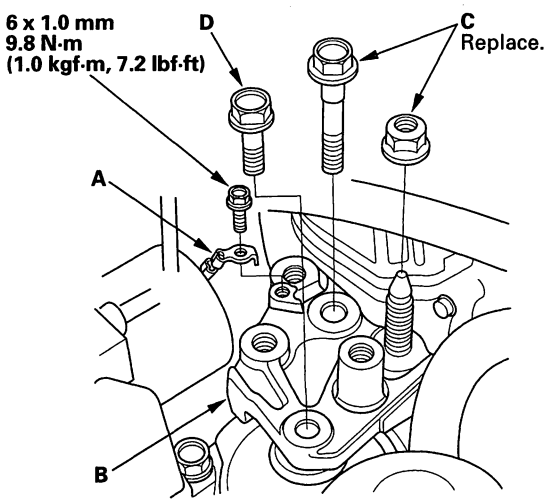


4. Install the side engine mount bracket, then loosely tighten the new bolt and nut (C), and loosely tighten the bolt (D).

5. Install the ground cable.

6. Remove the air cleaner housing assembly (see page 11-394).

7. Loosen the transmission mounting bolt and nuts (A).

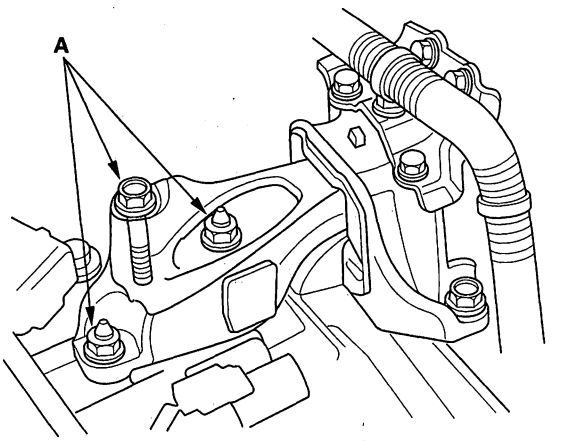


8. Raise the lift to full height.

9. Loosen the lower torque rod mounting bolt (A).

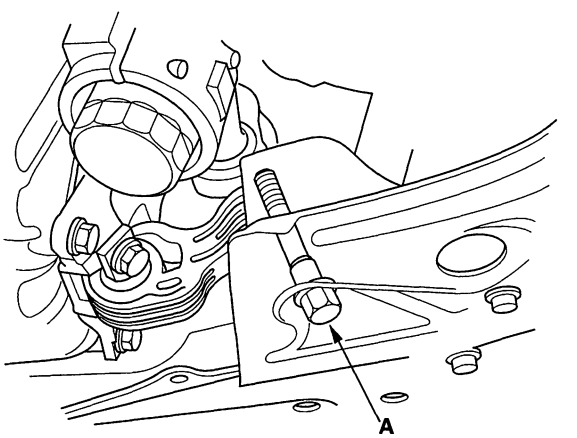




BACK

Protected by AR

10. Lower the vehicle on the lift.

11. Tighten the side engine mount mounting bolts and nut.

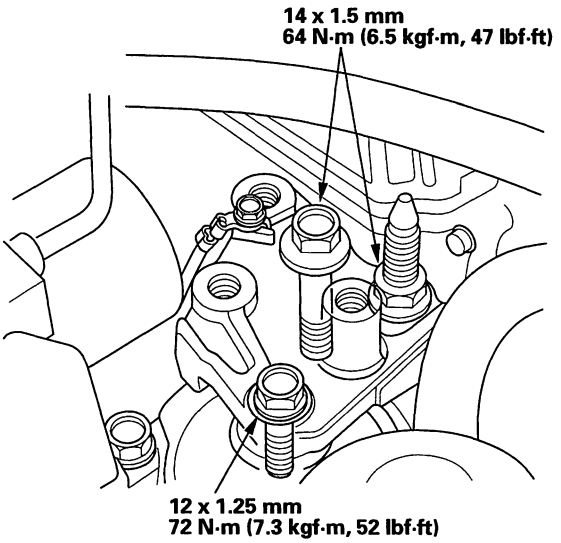


12. Tighten the transmission mounting bolt and nuts.

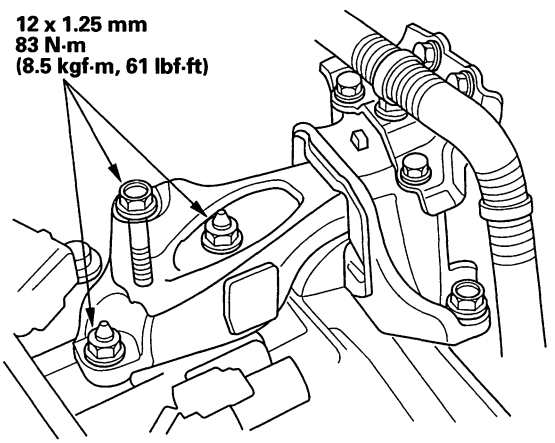


13. Raise the lift to full height.

14. Tighten the lower torque rod mounting bolt.

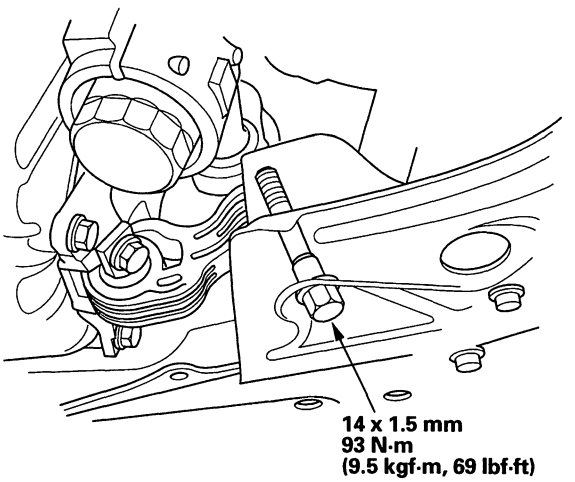


15. Lower the vehicle on the lift.

16. Install the air cleaner housing assembly (see page 11-394).

17. Install the upper torque rod (A) and torque rod stiffener (B), and tighten the new stiffener mounting bolts (C), then tighten the new upper torque rod mounting bolts in the numbered sequence shown.

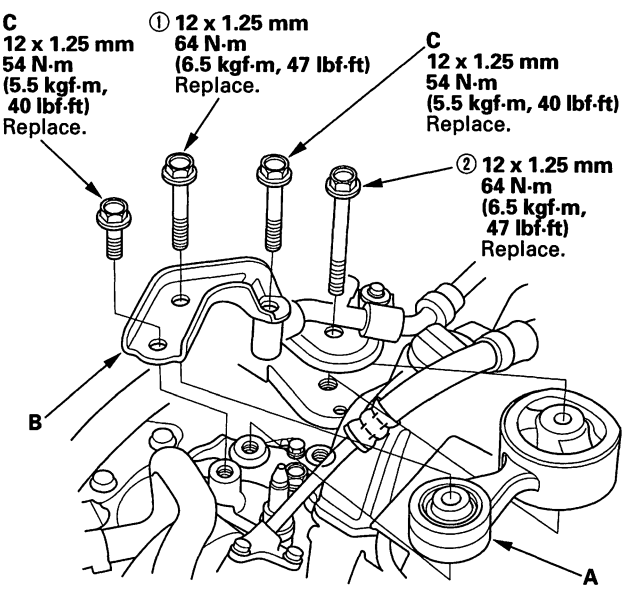

Protected by AR

BACK

Protected by AR

# Engine Mechanical

## Cylinder Head


Special Tools ..... 6-2
Component Location Index ..... 6-3
Engine Compression Inspection ..... 6-6
VTEC Rocker Arm Test ..... 6-7
VTC Actuator Inspection ..... 6-8
Valve Clearance Adjustment ..... 6-9
Crankshaft Pulley Removal and Installation ..... 6-12
Cam Chain Removal ..... 6-13
Cam Chain Installation ..... 6-16
Auto-tensioner Removal and Installation ..... 6-22
Chain Case Oil Seal Installation ..... 6-24
Cam Chain Inspection ..... 6-24
CKP Pulse Plate Replacement ..... 6-26
Cylinder Head Cover Removal ..... 6-28
Cylinder Head Cover Installation ..... 6-29
Cylinder Head Removal ..... 6-31
CMP Pulse Plate A Replacement ..... 6-34
CMP Pulse Plate B Replacement ..... 6-34
VTC Actuator, Exhaust Camshaft Sprocket Replacement ..... 6-35
Cylinder Head Inspection for Warpage ..... 6-36
Rocker Arm Assembly Removal ..... 6-37
Rocker Arm and Shaft Disassembly/Reassembly ..... 6-38
Rocker Arm and Shaft Inspection ..... 6-39
Camshaft Inspection ..... 6-40
Valve, Spring, and Valve Seal Removal ..... 6-42
Valve Inspection ..... 6-43
Valve Stem-to-Guide Clearance Inspection ..... 6-43
Valve Guide Replacement ..... 6-44
Valve Seat Reconditioning ..... 6-46
Valve, Spring, and Valve Seal Installation ..... 6-48
Rocker Arm Assembly Installation ..... 6-49
Cylinder Head Installation ..... 6-50
Sealing Bolt Installation ..... 6-53


BACK

Protected by AR

# Cylinder Head

## Special Tools

| Ref. No. | Tool Number | Description | Qty |
|---|---|---|---|
| ① | 07AAJ-PNAA101 | Air Pressure Regulator | 1 |
| ② | 07AAJ-RWCA100 | Cam Chain Inspection Gauge | 1 |
| ③ | 07HAH-PJ7A100 | Valve Guide Reamer, 5.5 mm | 1 |
| ④ | 07JAA-001020A | Socket, 19 mm | 1 |
| ⑤ | 07JAB-001020A | Holder Handle | 1 |
| ⑥ | 07MAA-PR70110 | Adjuster | 1 |
| ⑦ | 07MAA-PR70120 | Locknut Wrench | 1 |
| ⑧ | 07PAD-0010000 | Stem Seal Driver | 1 |
| ⑨ | 07ZAJ-PNAA101 | VTEC Air Adapter | 2 |
| ⑩ | 07ZAJ-PNAA200 | VTEC Air Stopper | 1 |
| ⑪ | 07ZAJ-PNAA300 | Air Joint Adapter | 1 |
| ⑫ | 070AB-RJA0100 | Crankshaft Pulley Holder | 1 |
| ⑬ | 07742-0010100 | Valve Guide Driver, 5.5 mm | 1 |
| ⑭ | 07746-0010400 | Attachment, 52 x 55 mm | 1 |
| ⑮ | 07749-0010000 | Driver | 1 |
| ⑯ | 07757-PJ1010A | Valve Spring Compressor Attachment | 1 |

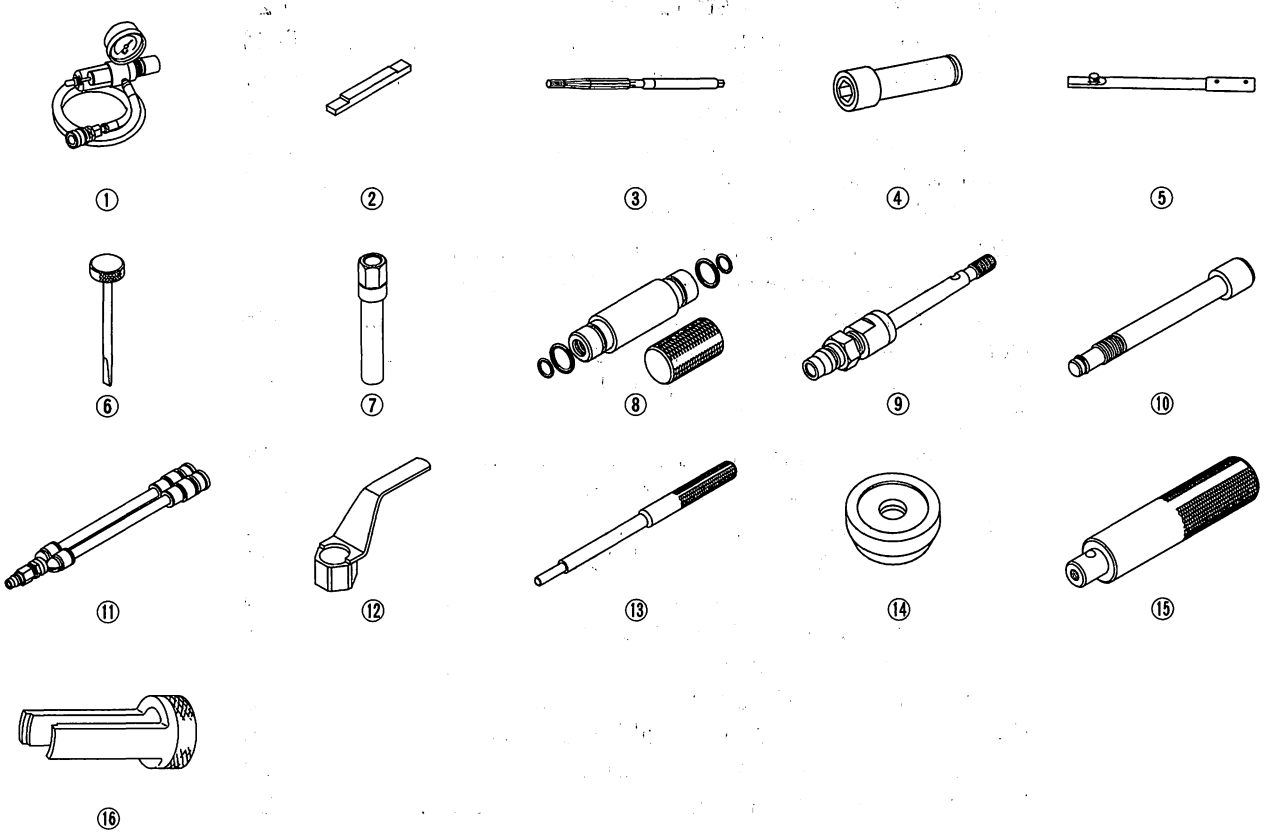




BACK

Protected by AR

## Component Location Index

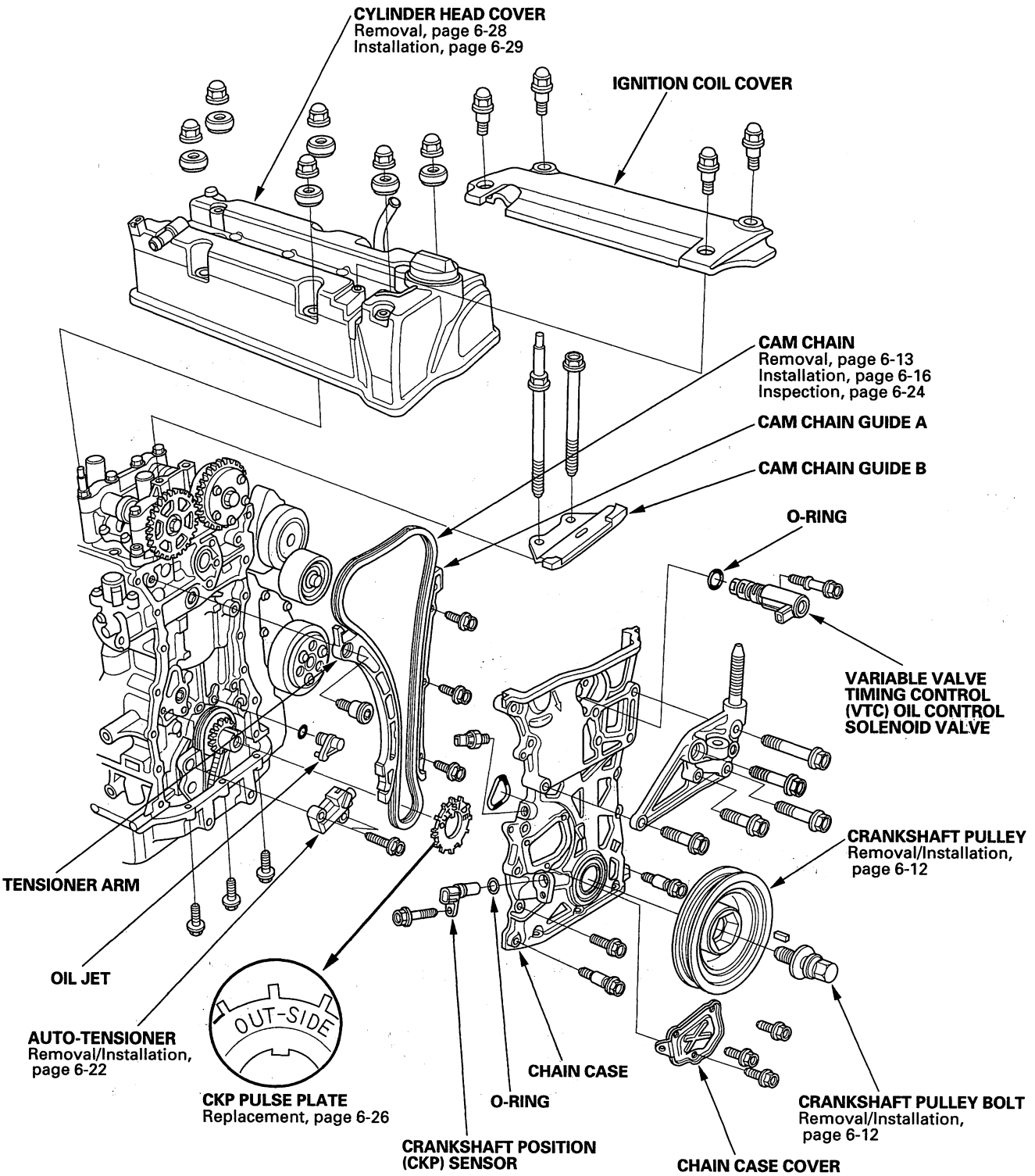


(cont'd)

Protected by AR



## Component Location Index (cont'd)

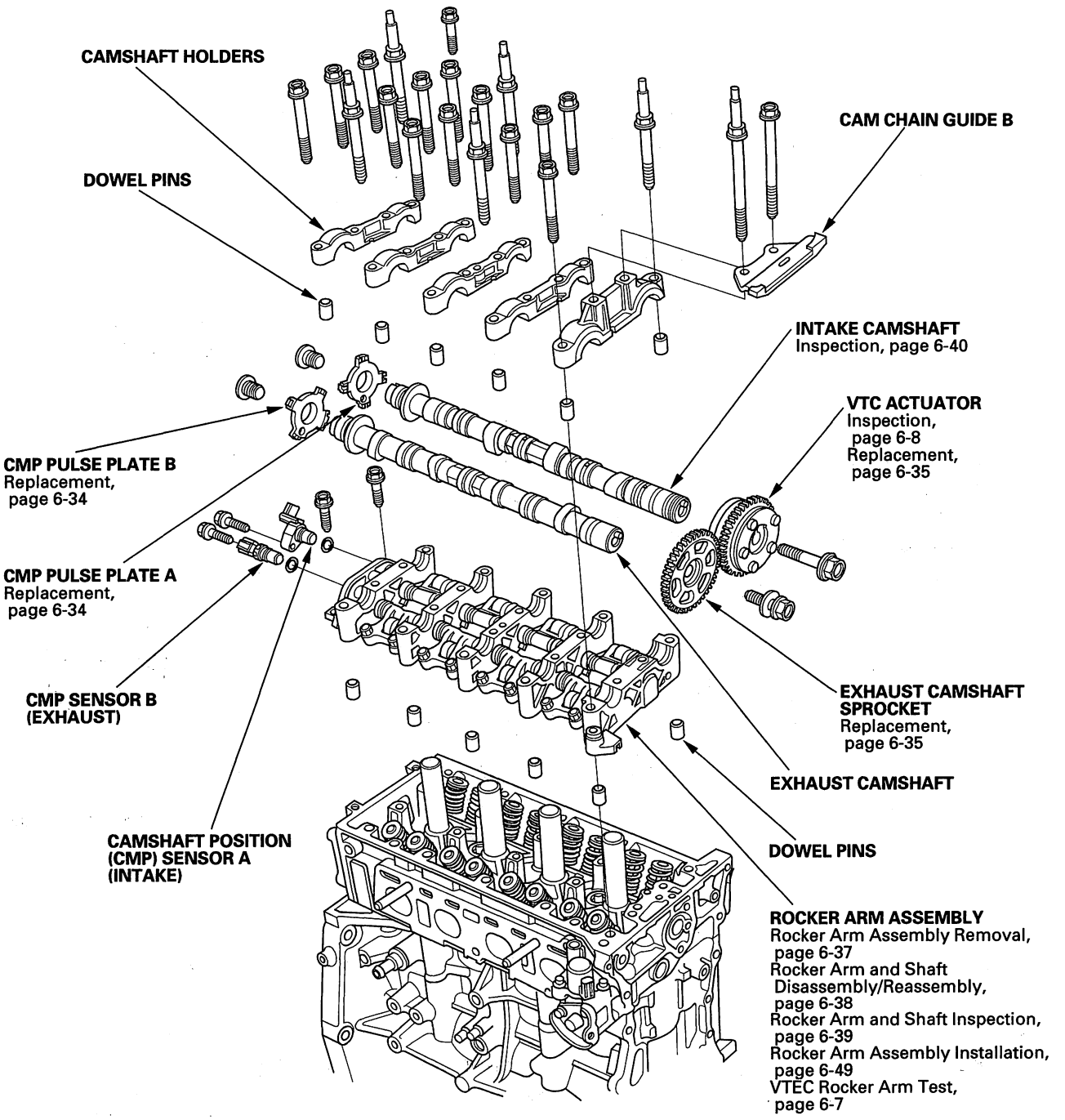




BACK

Protected by AR

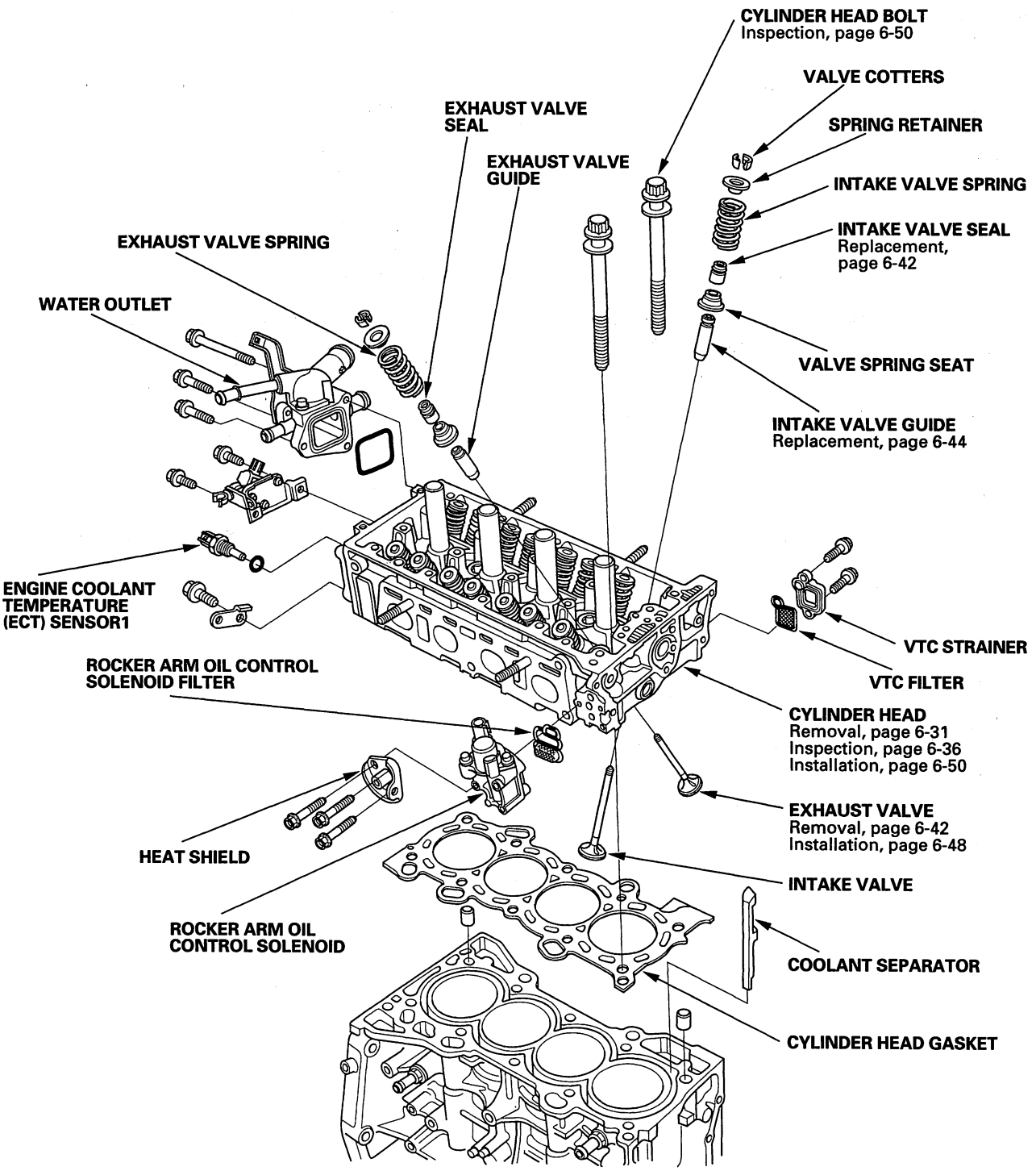

Protected by AR



## Engine Compression Inspection

NOTE: After this inspection, you must reset the powertrain control module (PCM), otherwise the PCM will continue to stop the injectors from functioning. Select PCM reset using the Honda Diagnostic System (HDS) (see page 11-4).

1. Warm up the engine to normal operating temperature (cooling fan comes on).
2. Turn the ignition switch OFF.
3. Connect the HDS to the data link connector (DLC) (see step 2 on page 11-3).
4. Turn the ignition switch ON (II).
5. Make sure the HDS communicates with the vehicle and the PCM. If it doesn't troubleshoot the DLC circuit (see page 11-229).
6. Select PGM-FI, INSPECTION, then ALL INJECTORS OFF on the HDS.
7. Remove the four ignition coils (see page 4-20).
8. Remove the four spark plugs.
9. Attach the compression gauge to the spark plug hole.

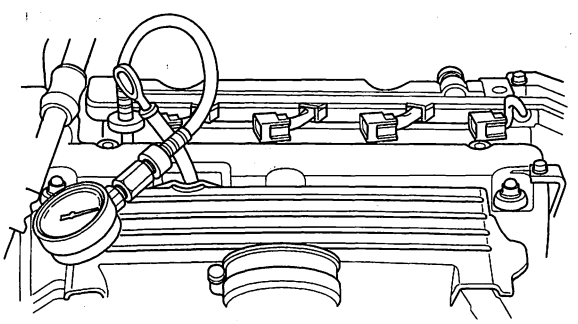

10. Open the throttle fully, then crank the engine with the starter motor and measure the compression.

    **Compression Pressure:**
    **Above 930 kPa (9.5 kgf/cm$^2$, 135 psi)**

11. Measure the compression on the remaining cylinders.

    **Maximum Variation:**
    **Within 200 kPa (2.0 kgf/cm$^2$, 28 psi)**

12. If the compression is not within specifications, check the following items, then remeasure the compression.
    - Damaged or worn valves and seats
    - Damaged cylinder head gasket
    - Damaged or worn piston rings
    - Damaged or worn piston and cylinder bore
13. Install the four spark plugs.
14. Install the four ignition coils (see page 4-20).
15. Select the PCM reset (see page 11-4) to cancel the ALL INJECTORS OFF function on the HDS.



BACK

Protected by AR

# VTEC Rocker Arm Test

**Special Tools Required**
- Air pressure regulator 07AAJ-PNAA101
- VTEC air adapter 07ZAJ-PNAA101
- VTEC air stopper 07ZAJ-PNAA200
- Air joint adapter 07ZAJ-PNAA300

1. Start the engine, and let it run for 5 minutes, then turn the ignition switch OFF.

2. Remove the cylinder head cover (see page 6-28).

3. Set the No. 1 piston at top dead center (TDC) (see step 5 on page 6-13).

4. Verify that the intake primary rocker arm (A) moves independently of the intake secondary rocker arm (B).

   - If the intake primary rocker arm does not move, remove the primary and secondary rocker arms as an assembly and check that the pistons in the secondary and primary rocker arms move smoothly (see page 6-39). If any rocker arm needs replacing, replace the primary and secondary rocker arms as an assembly, and test.
   - If the intake primary rocker arm moves freely, go to step 5.

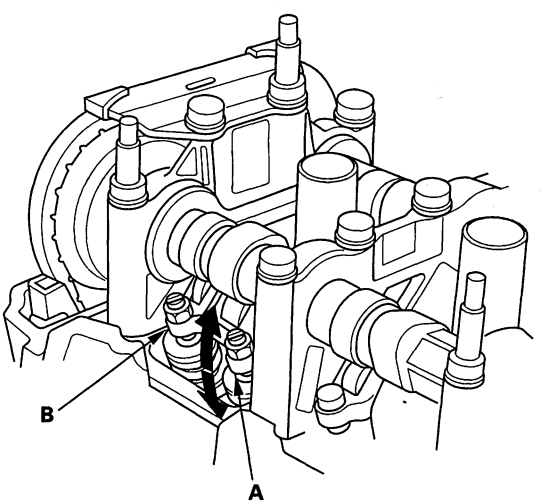


5. Repeat step 4 on the remaining intake primary rocker arms with each piston at TDC. When all the primary rocker arms pass the test, go to step 6.

6. Check that the air pressure on the shop air compressor gauge indicates over 400 kPa (4 kgf/cm$^2$, 57 psi).

7. Inspect the valve clearance (see page 6-9).

8. Remove the sealing bolt (A) from the relief hole, and install the VTEC air stopper (B).

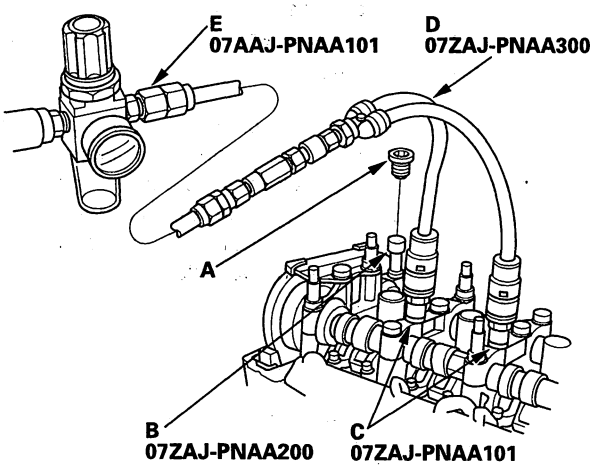


9. Remove the No. 2 and No. 3 camshaft holder bolts, and install the VTEC air adapters (C) finger-tight.

10. Connect the air joint adapter (D) and air pressure regulator (E).

(cont'd)

Protected by AR



## VTEC Rocker Arm Test (cont'd)

11. Loosen the valve on the regulator, and apply the specified air pressure.

    **Specified Air Pressure:**
    **290 kPa (3.0 kgf/cm², 42 psi)**

    NOTE: If the synchronizing piston does not move after applying air pressure; move the primary or secondary rocker arm up and down manually by rotating the crankshaft clockwise.

12. With the specified air pressure applied, move the intake primary rocker arm (A) for the No. 1 cylinder. The primary rocker arm and secondary rocker arm (B) should move together.

    If the intake secondary rocker arm does not move, remove the primary and secondary rocker arms as an assembly, and check that the pistons in the primary and secondary rocker arms move smoothly. If any rocker arm needs replacing, replace the primary and secondary rocker arms as an assembly, and test.

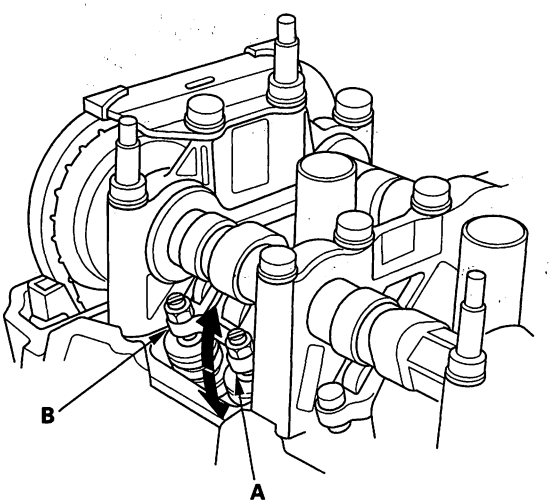


13. Remove the special tools.

14. Tighten the camshaft holder mounting bolts to 22 N·m (2.2 kgf·m, 16 lbf·ft).

15. Tighten the sealing bolt to 20 N·m (2.0 kgf·m, 14 lbf·ft).

16. Install the cylinder head cover (see page 6-29).

## VTC Actuator Inspection

1. Remove the cam chain (see page 6-13).

2. Loosen the rocker arm adjusting screws (see step 2 on page 6-37).

3. Remove the camshaft holder (see step 3 on page 6-37).

4. Remove the intake camshaft.

5. Check that the variable valve timing control (VTC) actuator is locked by turning the VTC actuator counterclockwise. If not locked, turn the VTC actuator clockwise until it stops, then recheck it. If it is still not locked, replace the VTC actuator.

6. Seal the advance holes (A) and retard holes (B) in the No. 1 camshaft journal with tape.

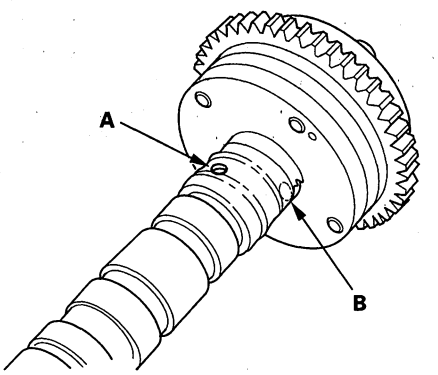


7. Punch a hole in the tape over one of the advance holes.



BACK

Protected by AR

8. Apply air to the advance hole to release the lock.

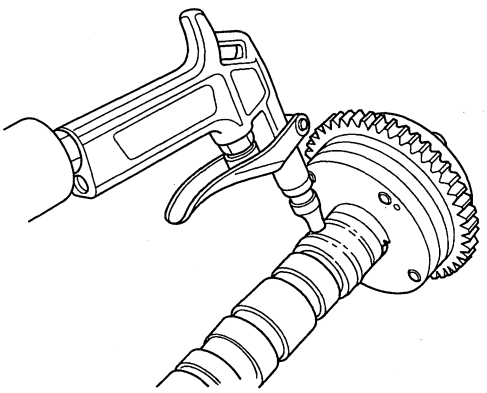

9. Check that the VTC actuator moves smoothly. If the VTC actuator does not move smoothly, replace the VTC actuator.

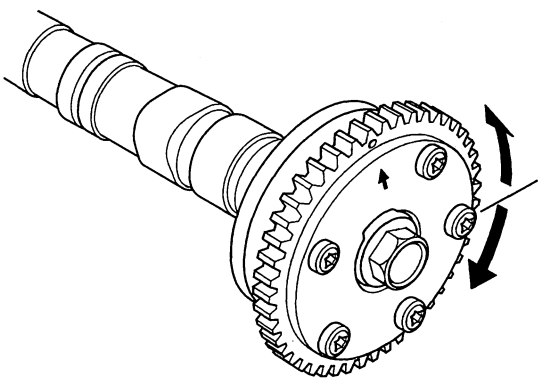

10. Remove the tape and adhesive residue from the camshaft journal.

11. Make sure the punch marks on the VTC actuator and exhaust camshaft sprocket are facing up, then set the camshafts in the head (see step 6 on page 6-49).

12. Set the camshaft holders and chain guide B in place (see step 7 on page 6-49).

13. Tighten the camshaft holder bolts to the specified torque (see step 8 on page 6-49).

14. Hold the camshaft, and turn the VTC actuator clockwise until you hear it click. Make sure to lock the VTC actuator by turning it.

15. Install the cam chain (see page 6-16).

16. Adjust the valve clearance (see page 6-9).

## Valve Clearance Adjustment

**Special Tools Required**
- Adjuster 07MAA-PR70110
- Locknut wrench 07MAA-PR70120

NOTE: Adjust the valves only when the cylinder head temperature is less than 100 °F (38 °C).

1. Remove the cylinder head cover (see page 6-28).

2. Set the No. 1 piston at top dead center (TDC). The punch mark (A) on the variable valve timing control (VTC) actuator and the punch mark (B) on the exhaust camshaft sprocket should be at the top. Align the TDC marks (C) on the VTC actuator and exhaust camshaft sprocket.

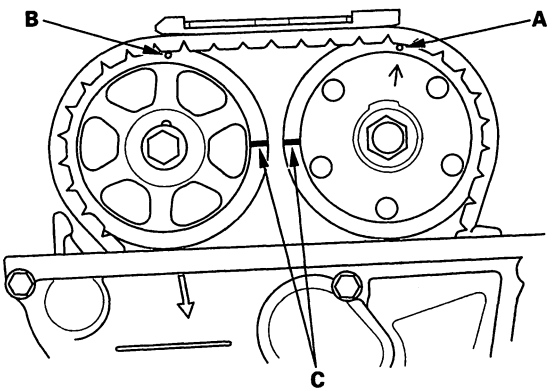


(cont'd)

Protected by AR



## Valve Clearance Adjustment (cont'd)

3. Select the correct thickness feeler gauge for the valves you're going to check.

**Valve Clearance**
**Intake: 0.21—0.25 mm (0.008—0.010 in.)**
**Exhaust: 0.28—0.32 mm (0.011—0.013 in.)**

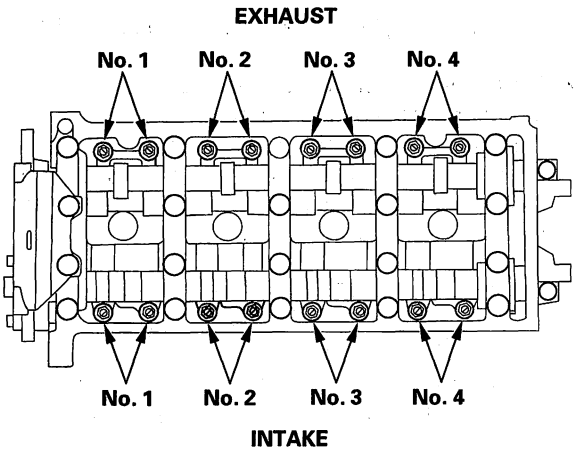


4. Insert the feeler gauge (A) between the adjusting screw (B) and the end of the valve stem, and slide it back and forth; you should feel a slight amount of drag.

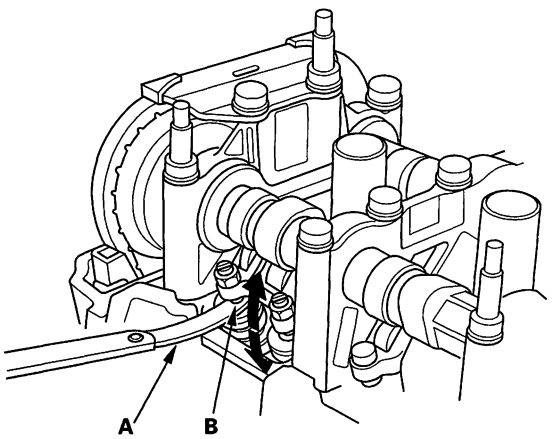


5. If you feel too much or too little drag, loosen the locknut with the locknut wrench and adjuster, and turn the adjusting screw until the drag on the feeler gauge is correct.

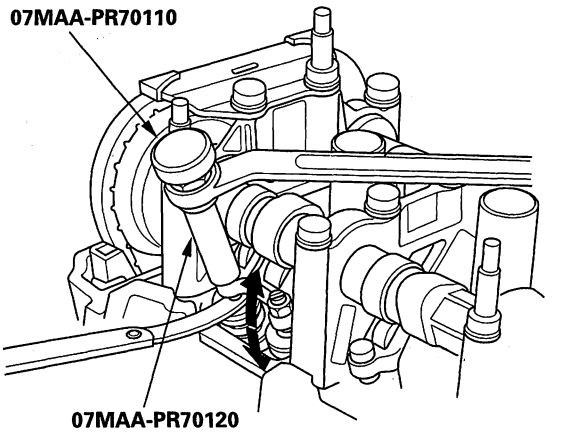


6. Tighten the locknut to the specified torque, and recheck the clearance. Repeat the adjustment if necessary.

**Specified Torque**
**Intake:**
**7 x 0.75 mm**
**20 N·m (2.0 kgf·m, 14 lbf·ft)**
**Apply engine oil to the nut threads.**
**Exhaust:**
**7 x 0.75 mm**
**14 N·m (1.4 kgf·m, 10 lbf·ft)**
**Apply engine oil to the nut threads.**



BACK

Protected by AR

7. Rotate the crankshaft 180 ° clockwise (camshaft pulley turns 90 °).

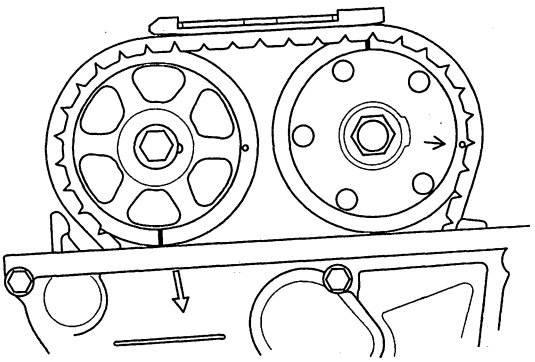

8. Check and, if necessary, adjust the valve clearance on No. 3 cylinder.

9. Rotate the crankshaft 180 ° clockwise (camshaft pulley turns 90 °).

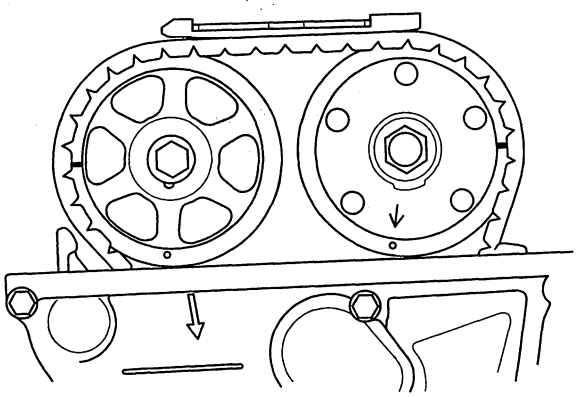

10. Check and, if necessary, adjust the valve clearance on No. 4 cylinder.

11. Rotate the crankshaft 180 ° clockwise (camshaft pulley turns 90 °).

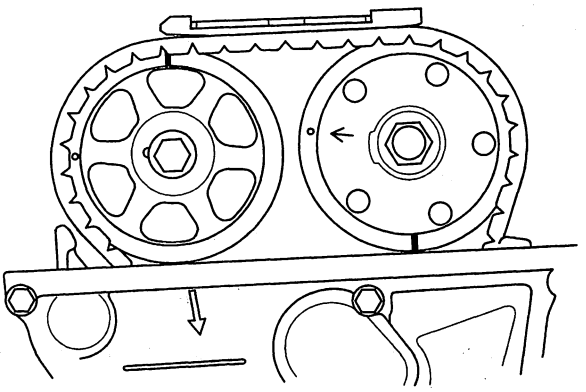

12. Check and, if necessary, adjust the valve clearance on No. 2 cylinder.

13. Install the cylinder head cover (see page 6-29).

Protected by AR



## Crankshaft Pulley Removal and Installation

**Special Tools Required**
- Holder handle 07JAB-001020A
- Crankshaft pulley holder 070AB-RJA0100
- Socket, 19 mm 07JAA-001020A or a commercially available 19 mm socket

### Removal

1. Remove the front wheels.
2. Remove the splash shield (see step 25 on page 5-6).
3. Remove the drive belt (see page 4-31).
4. Hold the pulley with holder handle (A) and holder attachment (B).

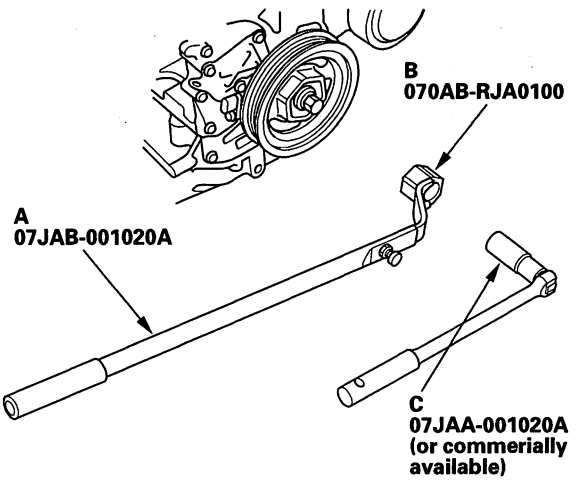


5. Remove the bolt with a 19 mm socket (C) and breaker bar, then remove the crankshaft pulley.

### Installation

1. Clean the crankshaft pulley (A), crankshaft (B), bolt (C), and washer (D). Lubricate as shown.

○: **Clean**
●: **Lubricate**

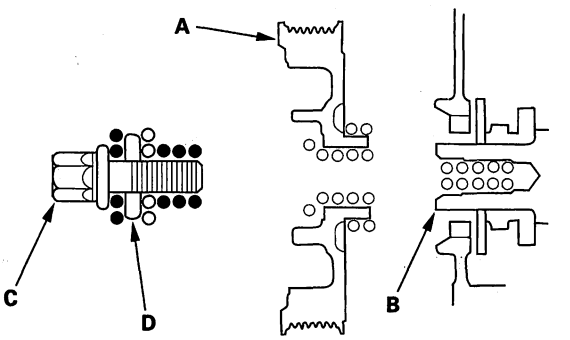


2. Install the crankshaft pulley, and hold the pulley with holder handle (A) and holder attachment (B).

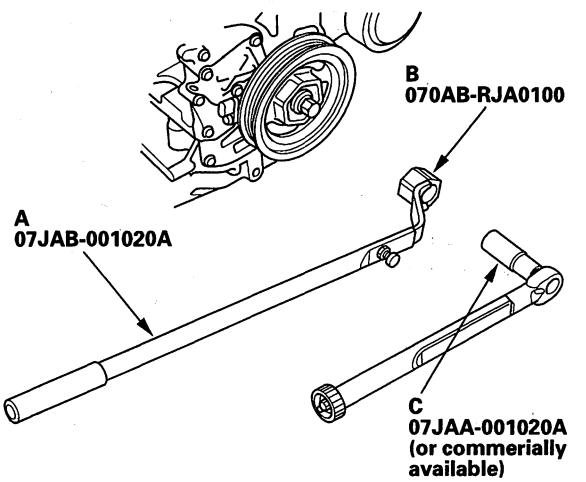


3. Tighten the bolt to 49 N·m (5.0 kgf·m, 36 lbf·ft) with a torque wrench and 19 mm socket (C). Do not use an impact wrench. If you are using a new pulley bolt or new crankshaft, tighten the bolt to 177 N·m (18.0 kgf·m, 130 lbf·ft) with a torque wrench and 19 mm socket, loosen the bolt and tighten it 49 N·m (5.0 kgf·m, 36 lbf·ft).
4. Tighten the pulley bolt an additional 90 °.
5. Install the drive belt (see page 4-31).
6. Install the splash shield (see step 30 on page 5-16).
7. Install the front wheels.



BACK

Protected by AR

## Cam Chain Removal

NOTE: Keep the cam chain away from magnetic fields.

1. Remove the front wheels.
2. Remove the splash shield (see step 25 on page 5-6).
3. Remove the drive belt (see page 4-31).
4. Remove the cylinder head cover (see page 6-28).
5. Set the No. 1 piston at top dead center (TDC). The punch mark (A) on the variable valve timing control (VTC) actuator and the punch mark (B) on the exhaust camshaft sprocket should be at the top. Align the TDC marks (C) on the VTC actuator and exhaust camshaft sprocket.

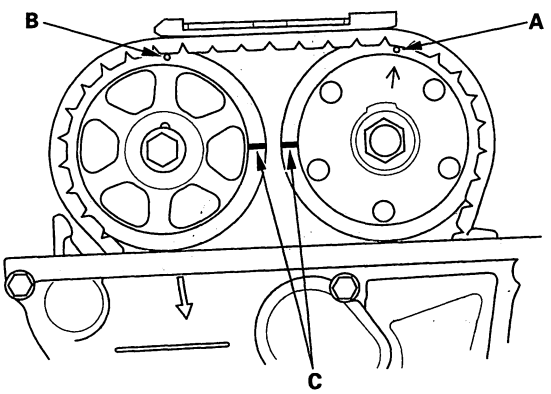


6. Remove the VTC oil control solenoid valve (see page 11-319).
7. Remove the crankshaft pulley (see page 6-12).
8. Support the engine with a jack and a wood block under the oil pan.
9. Remove the torque rod stiffener (A) and upper torque rod (B).

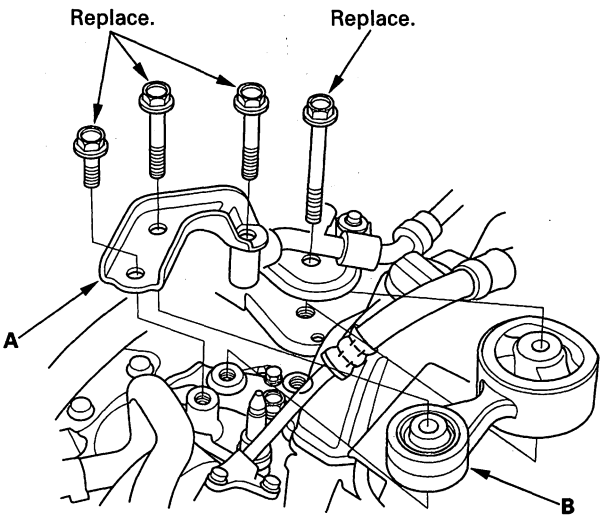


10. Remove the ground cable (A), then remove the side engine mount bracket (B).

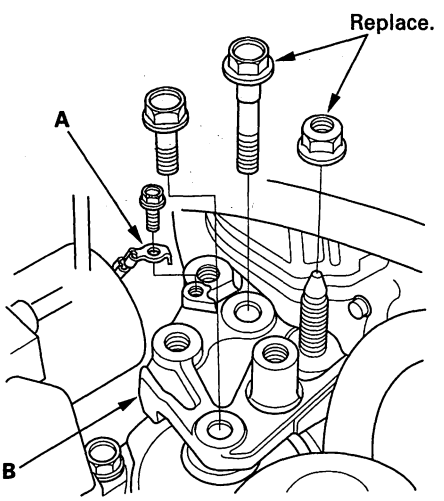


(cont'd)

Protected by AR



## Cam Chain Removal (cont'd)

11. Remove the water bypass pipe mounting bolt (A), then remove the side engine mount bracket (B).

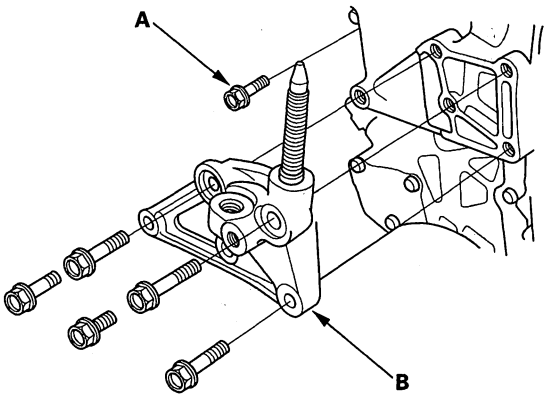


12. Remove the cam chain case.

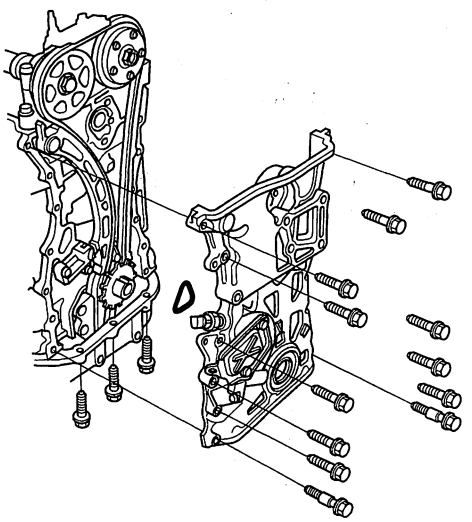

13. Loosely install the crankshaft pulley.

14. Turn the crankshaft counterclockwise to compress the auto-tensioner.

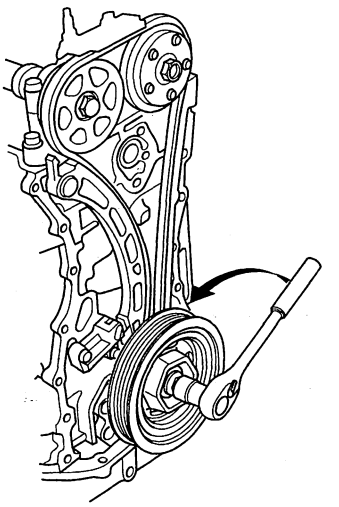

15. Align the holes on the lock (A) and the auto-tensioner (B), then insert a 1.5 mm (0.06 in.) diameter pin or lock pin (P/N 14511-PNA-003) (C) into the holes. Turn the crankshaft clockwise to secure the pin.

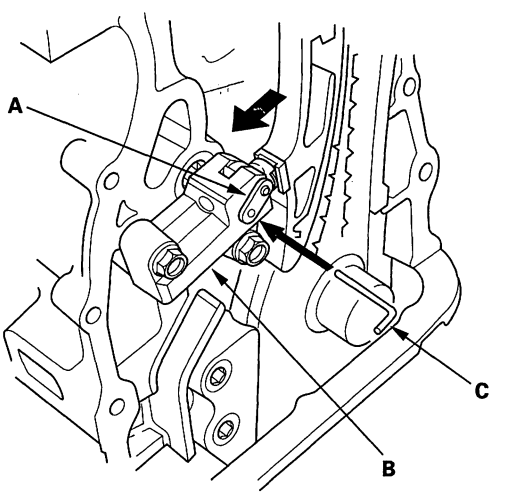




BACK

Protected by AR

16. Remove the auto-tensioner.

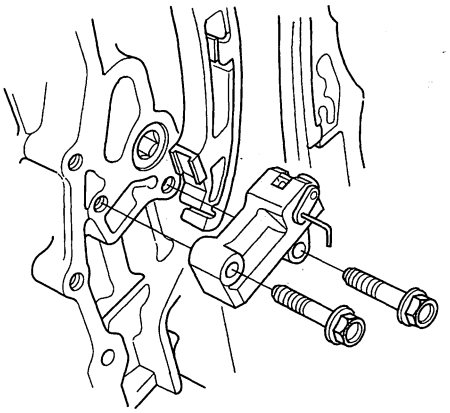

17. Remove the cam chain guide B.

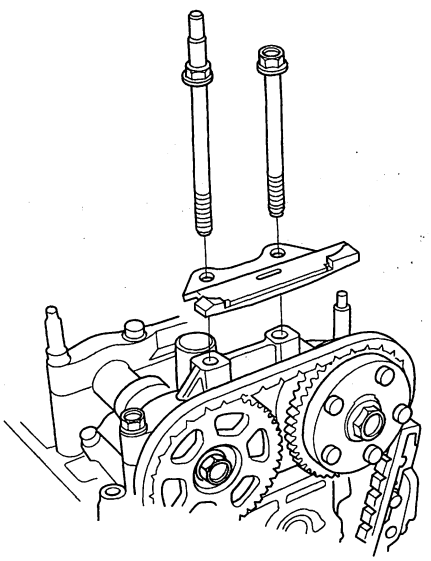

18. Remove the cam chain guide A and tensioner arm (B).

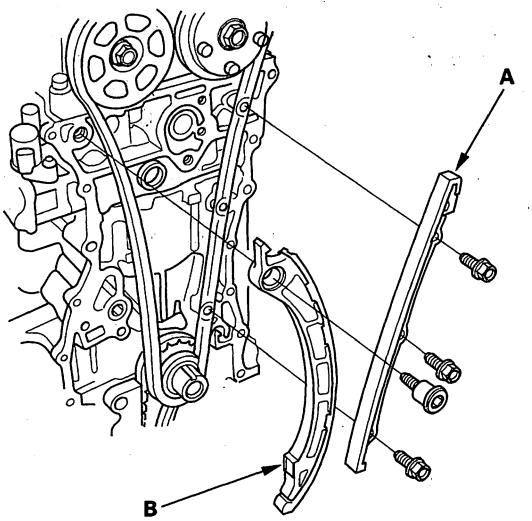


19. Remove the cam chain.

Protected by AR



## Cam Chain Installation

NOTE:
- Keep the cam chain away from magnetic fields.
- Before this procedure, check that the variable valve timing control (VTC) actuator is locked by turning the VTC actuator counterclockwise. If not locked, turn the VTC actuator clockwise until it stops, then recheck it. If it is still not locked, replace the VTC actuator.

1. Set the crankshaft to top dead center (TDC). Align the TDC mark (A) on the crankshaft sprocket with the pointer (B) on the engine block.

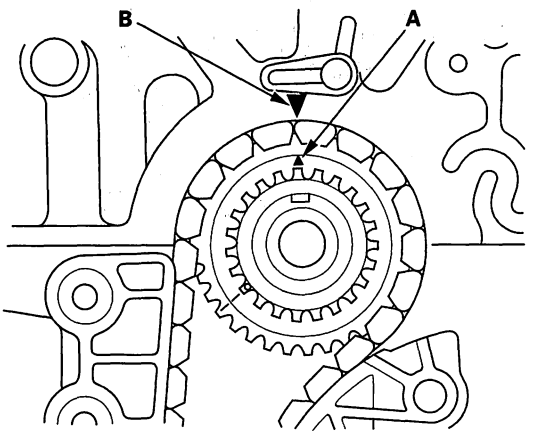


2. Set the camshafts to TDC. The punch mark (A) on the variable valve timing control (VTC) actuator and the punch mark (B) on the exhaust camshaft sprocket should be at the top. Align the TDC marks (C) on the VTC actuator and exhaust camshaft sprocket.

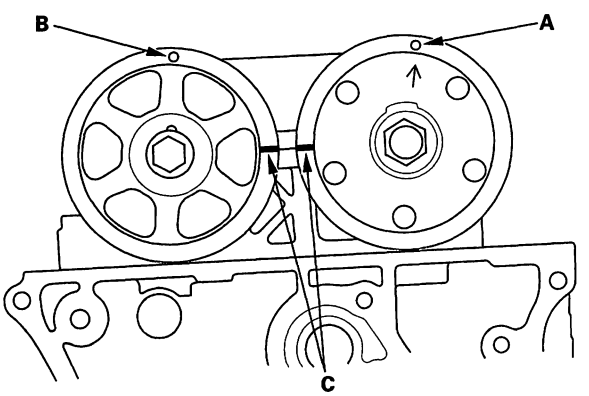


3. To hold the intake camshaft, insert a change detent arm shaft (P/N 24635-P6H-003) (A) into the maintenance hole in the camshaft position (CMP) pulse plate A (B) and through the No. 5 rocker shaft holder (C).

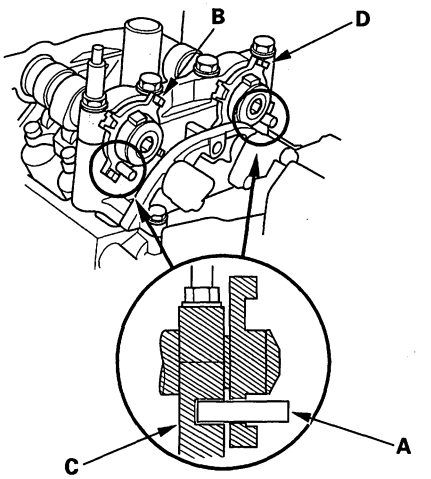


4. To hold the exhaust camshaft, insert a change detent arm shaft (P/N 24635-P6H-003) (A) into the maintenance hole in the camshaft position (CMP) pulse plate B (D) and through the No. 5 rocker shaft holder (C).

5. Install the cam chain on the crankshaft sprocket with the center of the two colored link plates (A) aligned with the mark (B) on the crankshaft sprocket.

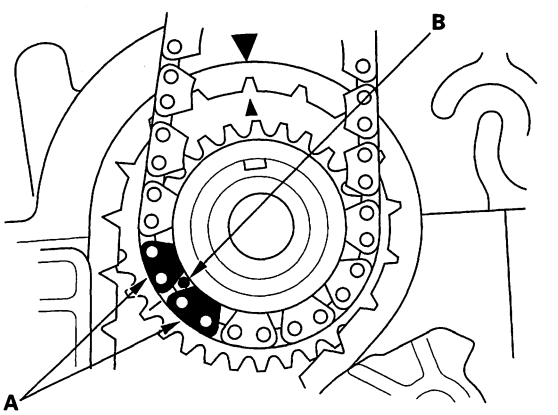




BACK

Protected by AR

6. Install the cam chain on the VTC actuator and the exhaust camshaft sprocket with the punch marks (A) aligned with the center of the three colored link plates (B).

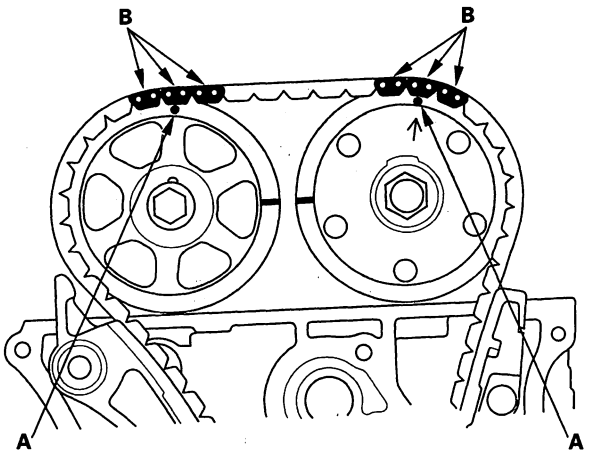


7. Install the cam chain guide A and tensioner arm (B).

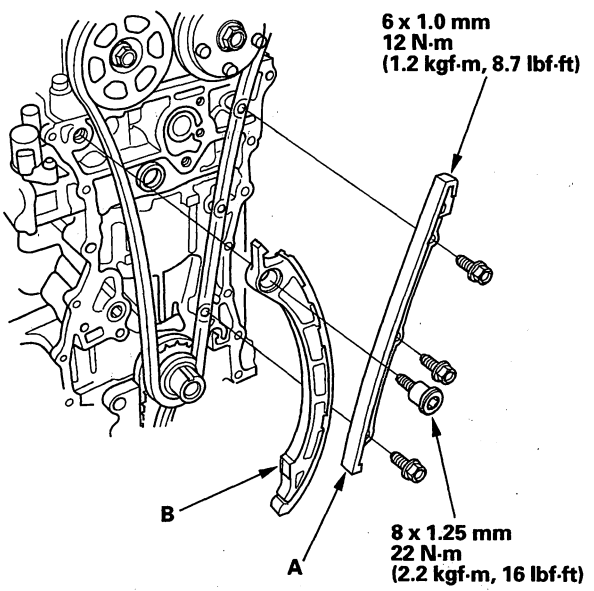


8. Install the auto-tensioner.

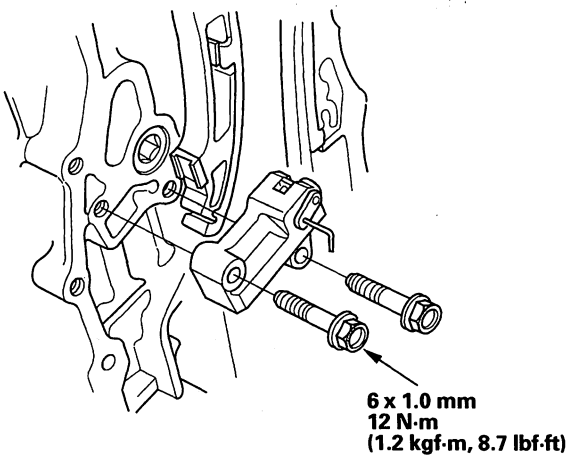


9. Install the cam chain guide B.

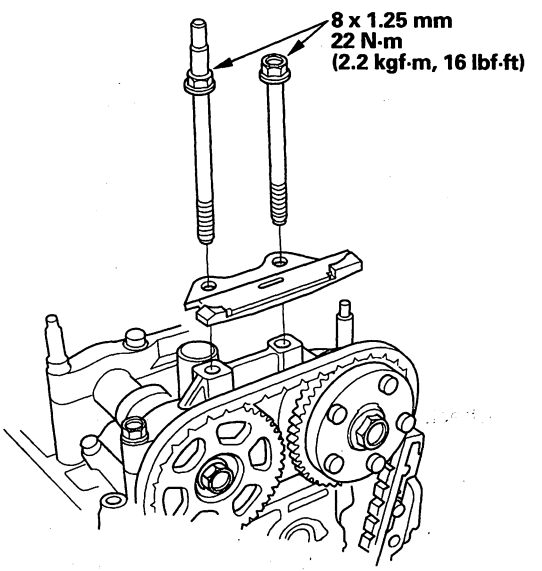


(cont'd)

Protected by AR



## Cam Chain Installation (cont'd)

10. Remove the pin or lock pin (P/N 14511-PNA-003) from the auto-tensioner.

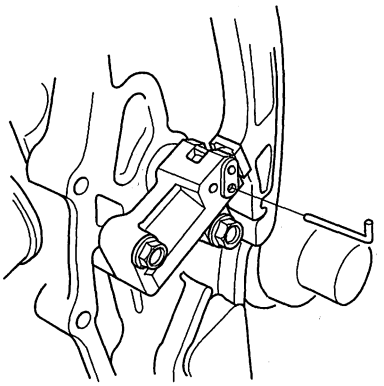

11. Remove the change detent arm shafts (P/N 24635-P6H-003).

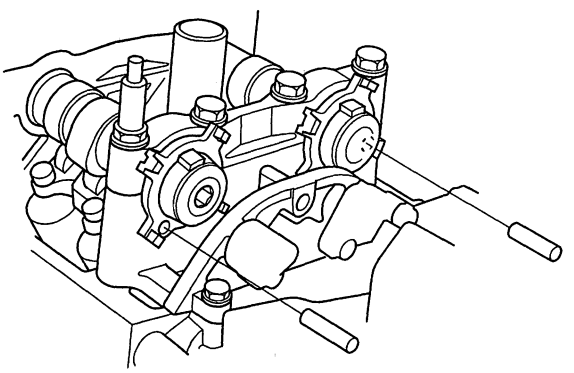

12. Check the chain case oil seal for damage. If the oil seal is damaged, replace the chain case oil seal (see page 6-24).

13. Remove all of the old liquid gasket from the chain case mating surfaces, bolts, and bolt holes.

14. Clean, and dry the chain case mating surfaces.

15. Apply liquid gasket, P/N 08717-0004, 08718-0001, 08718-0003, or 08718-0009, evenly to the engine block mating surface of the chain case. Install the component within 5 minutes of applying the liquid gasket.

    NOTE:
    - If you apply liquid gasket P/N 08718-0012, the component must be install within 4 minutes.
    - If too much time has passed after applying the liquid gasket, remove the old liquid gasket and residue, then reapply new liquid gasket.

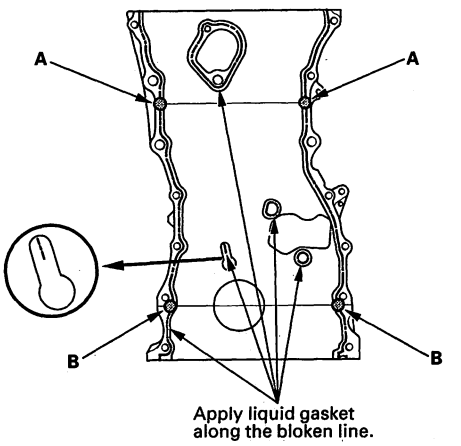


16. Apply liquid gasket to the engine block upper surface contact areas (A) on the chain case and lower block upper surface contact areas (B) on the chain case.

17. Apply liquid gasket, P/N 08717-0004, 08718-0001, 08718-0003, or 08718-0009, evenly to the oil pan mating surface of the chain case. Install the component within 5 minutes of applying the liquid gasket.

    NOTE:
    - If you apply liquid gasket P/N 08718-0012, the component must be install within 4 minutes.
    - If too much time has passed after applying the liquid gasket, remove the old liquid gasket and residue, then reapply new liquid gasket.

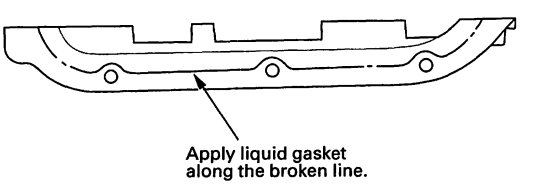




BACK

Protected by AR

18. Install the new O-ring (A) on the chain case. Set the edge of the chain case (B) to the edge of the oil pan (C), then install the chain case on the engine block (D). Wipe off the excess liquid gasket on the oil pan and chain case mating area.

NOTE:
- When installing the chain case, do not slide the bottom surface onto the oil pan mounting surface.
- Wait at least 30 minutes before filling the engine with oil.
- Do not run the engine for at least 3 hours after installing the chain case.

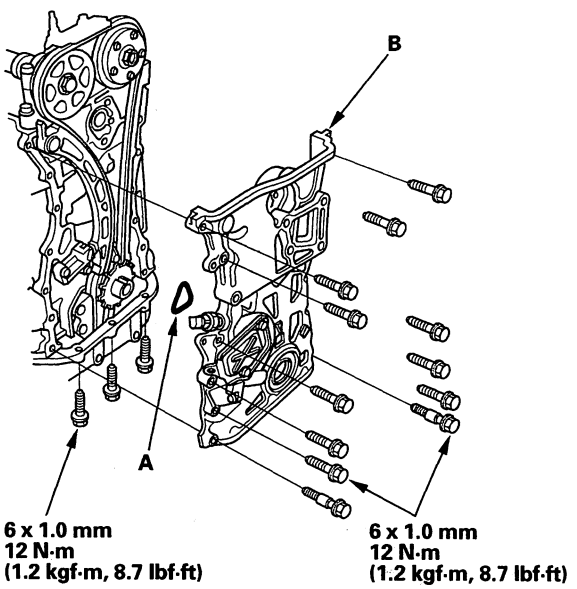


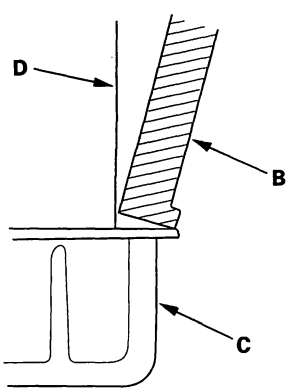


19. Install the side engine mount bracket (A), then install the water bypass pipe mounting bolt (B).

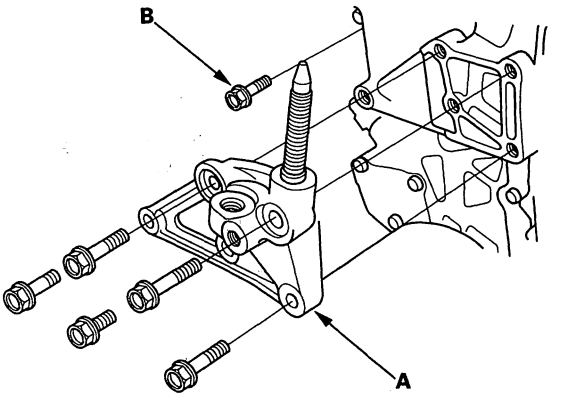


20. Install the side engine mount bracket (A), then loosely tighten the new bolt and nut (B), and loosely tighten the bolt (C).

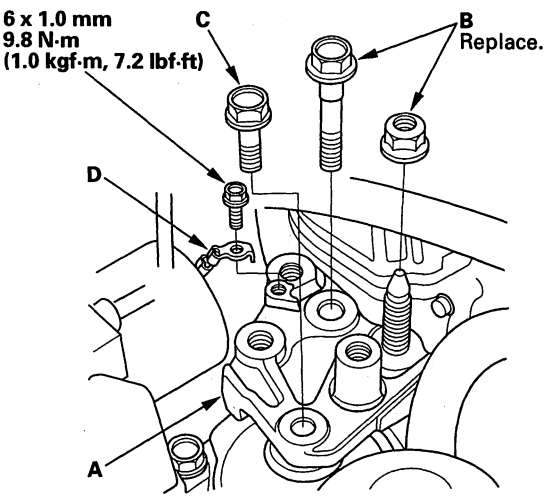


21. Install the ground cable (D).

(cont'd)

Protected by AR



## Cam Chain Installation (cont'd)

22. Remove the air cleaner housing assembly (see page 11-394).

23. Loosen the transmission mounting bolt and nuts (A).

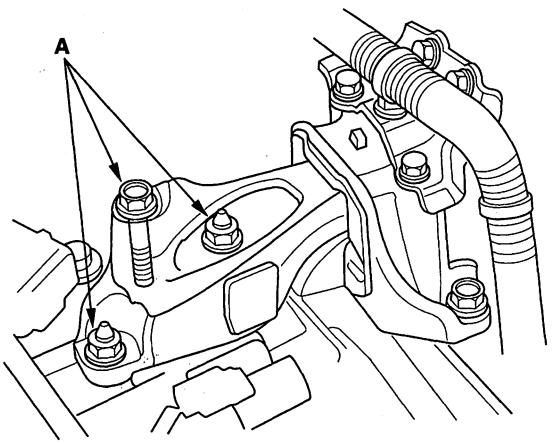


24. Raise the lift to full height.

25. Loosen the lower torque rod mounting bolt (A).

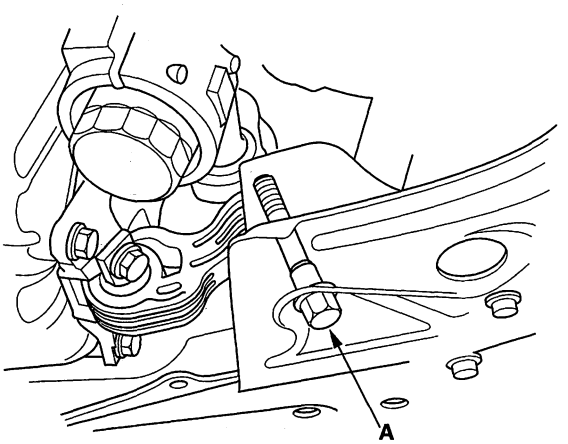


26. Lower the vehicle on the lift.

27. Tighten the side engine mount mounting bolts and nut.

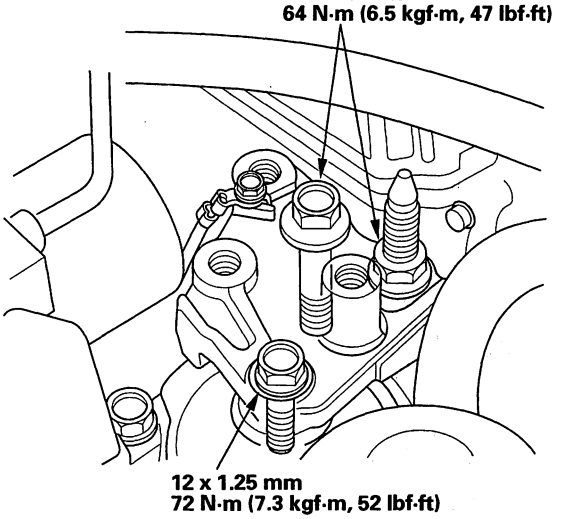


28. Tighten the transmission mounting bolt and nuts.

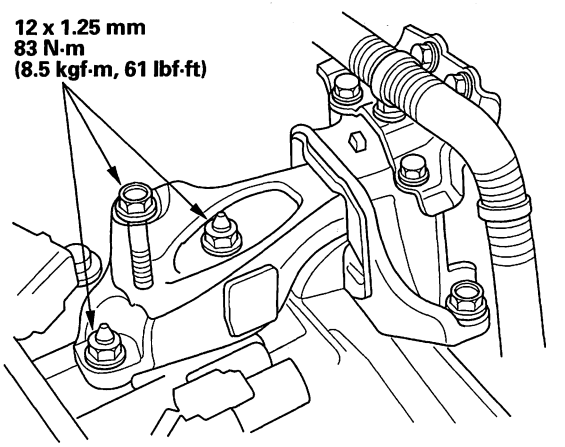




BACK

Protected by AR

29. Raise the lift to full height.

30. Tighten the lower torque rod mounting bolt.

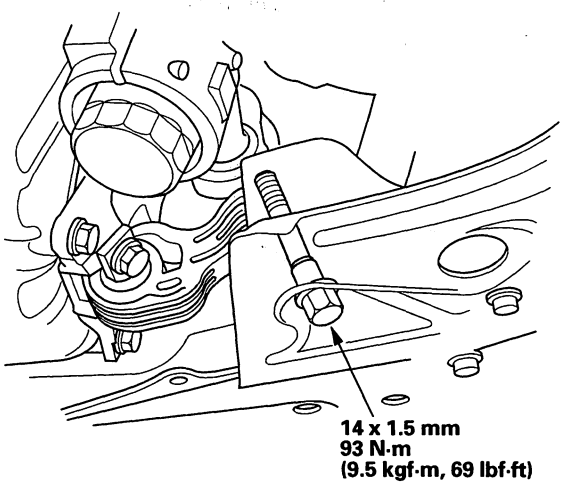


31. Lower the vehicle on the lift.

32. Install the air cleaner housing assembly (see page 11-394).

33. Install the upper torque rod (A) and torque rod stiffener (B), and tighten the new stiffener mounting bolts (C), then tighten the new upper torque rod mounting bolts in the numbered sequence shown.

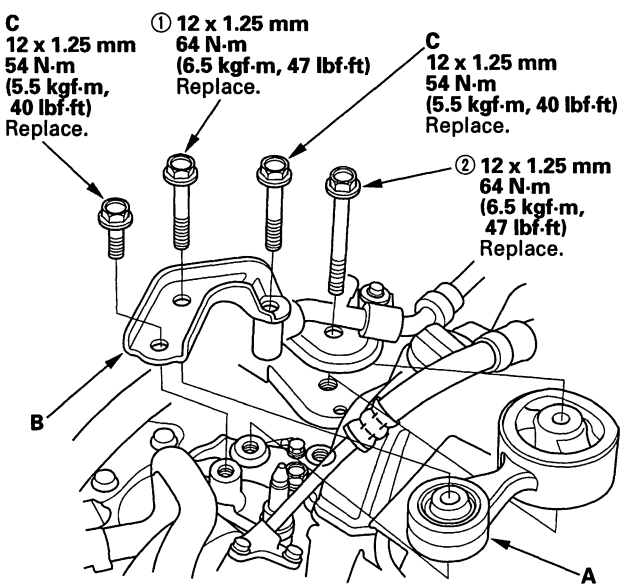


34. Install the crankshaft pulley (see page 6-12).

35. Install the variable valve timing control (VTC) oil control solenoid valve (see page 11-319).

36. Install the cylinder head cover (see page 6-29).

37. Install the drive belt (see page 4-31).

38. Do the CKP pattern clear/CKP learn procedure (see page 11-4).

Protected by AR



## Auto-tensioner Removal and Installation

### Removal

1. Remove the chain case cover.

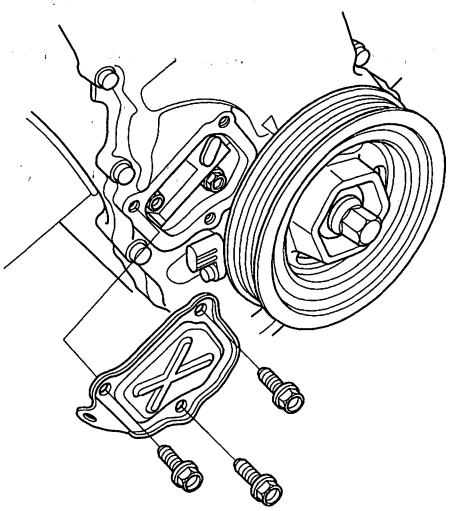

2. Turn the crankshaft counterclockwise to compress the auto-tensioner.

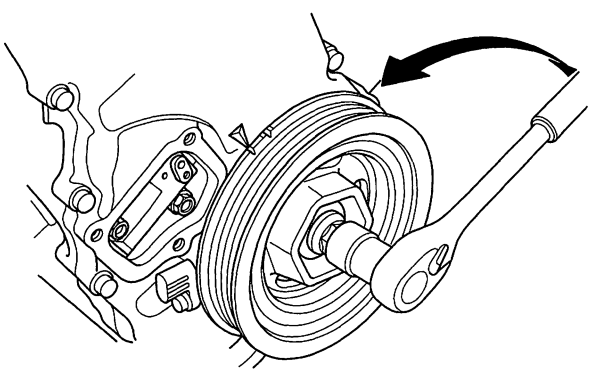

3. Align the holes on the lock (A) and the auto-tensioner (B), then insert a 1.5 mm (0.06 in.) diameter pin or lock pin (P/N 14511-PNA-003) (C) into the holes. Turn the crankshaft clockwise to secure the pin.

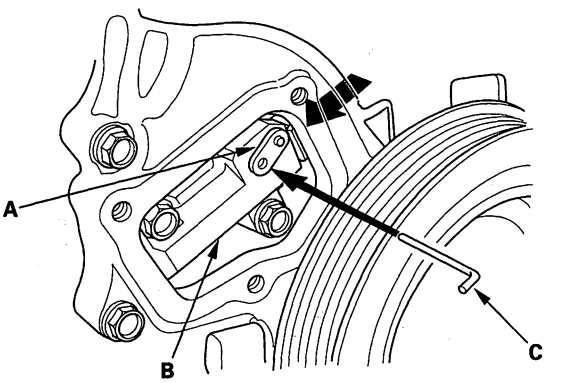


4. Remove the auto-tensioner.

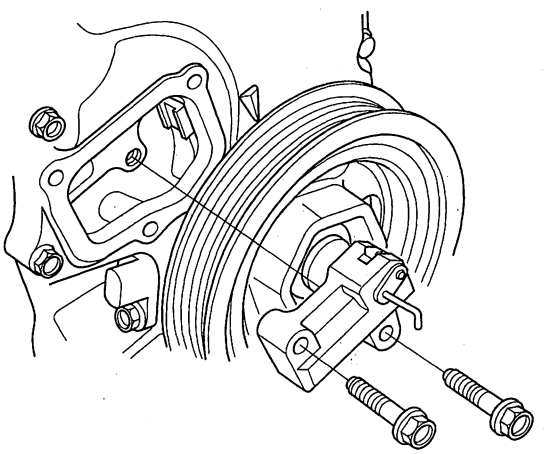



BACK

Protected by AR

## Installation

1. Install the auto-tensioner.

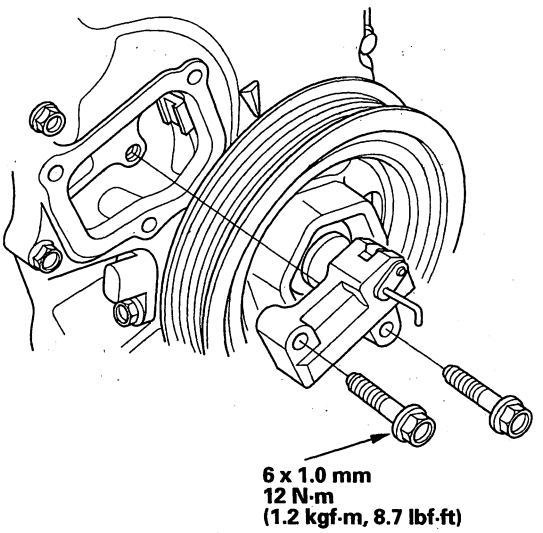


2. Remove the pin or lock pin (P/N 14511-PNA-003) from the auto-tensioner.

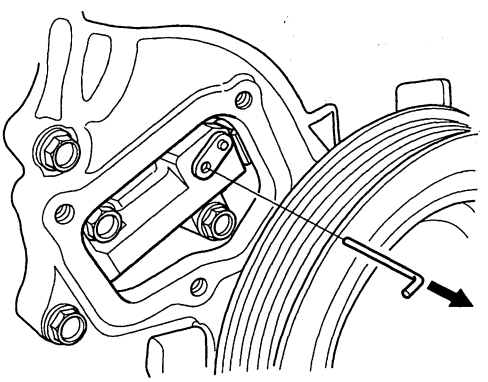

3. Remove all of the old liquid gasket from the chain case cover mating surfaces, bolts, and bolt holes.

4. Clean, and dry the chain case cover mating surfaces.

5. Apply liquid gasket, P/N 08717-0004, 08718-0001, 08718-0003, or 08718-0009, evenly to the chain case mating surface of the chain case cover. Install the component within 5 minutes of applying the liquid gasket.

   NOTE:
   - If you apply liquid gasket P/N 08718-0012, the component must be install within 4 minutes.
   - If too much time has passed after applying the liquid gasket, remove the old liquid gasket and residue, then reapply new liquid gasket.

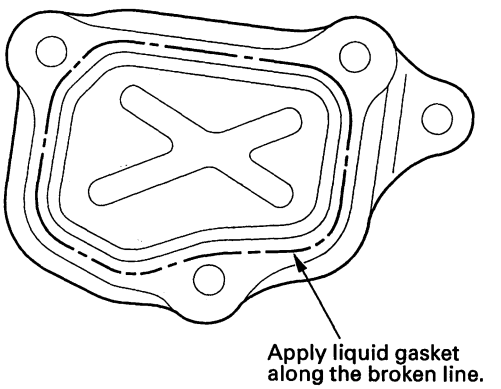


6. Install the chain case cover.

   NOTE:
   - Wait at least 30 minutes before filling the engine with oil.
   - Do not run the engine for at least 3 hours after installing the chain case cover.

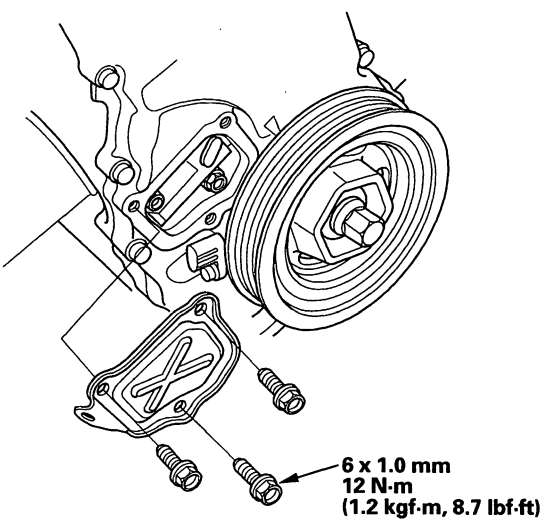

Protected by AR



## Chain Case Oil Seal Installation

**Special Tools Required**
- Driver 07749-0010000
- Attachment, 52 x 55 mm 07746-0010400

1. Use the driver and attachment to drive a new oil seal squarely into the chain case to the specified installed height.

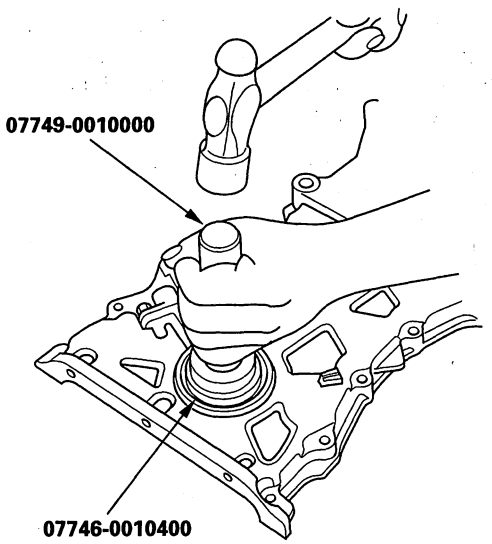


2. Measure the distance between the chain case surface and oil seal.

**Oil Seal Installed Height:**
**33.0—33.7 mm (1.30—1.33 in.)**

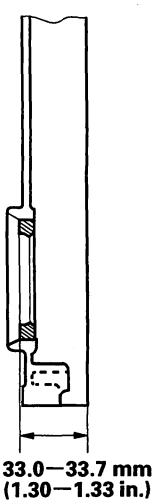


## Cam Chain Inspection

**Special Tools Required**
Cam chain inspection gauge 07AAJ-RWCA100

1. Remove the front wheels.
2. Remove the splash shield (see step 25 on page 5-6).
3. Remove four spark plugs.
4. Remove the cylinder head cover (see page 6-28).
5. Rotate crankshaft pulley two turns clockwise.
6. Set the No. 1 piston at top dead center (TDC). The punch mark (A) on the variable valve timing control (VTC) actuator and the punch mark (B) on the exhaust camshaft sprocket should be at the top. Align the TDC marks (C) on the VTC actuator and exhaust camshaft sprocket.

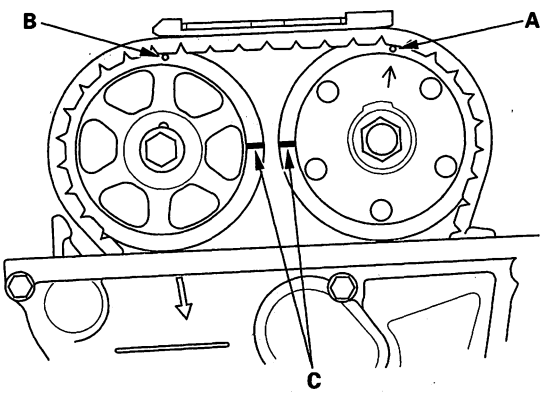




BACK

Protected by AR

7. Measure the clearance between the cam chain and the tensioner arm with the cam chain inspection gauge.

   - If the clearance is OK, Go to step 22.
   - If the clearance is more than the service limit, Go to step 8.

   **Chain-to-Arm Clearance**
   **Service Limit:**
   **MIL on with P0341:4.3 mm (0.17 in.)**
   **Without MIL: 5.5 mm (0.22 in.)**

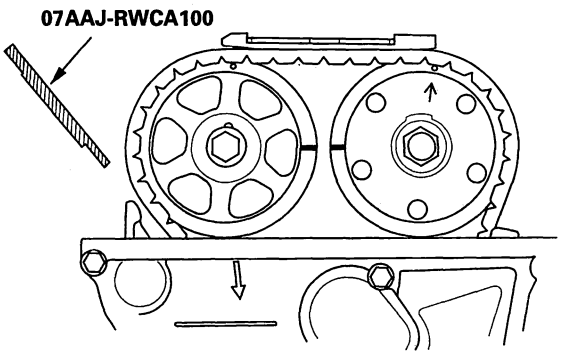


8. Remove the cam chain (see page 6-13),and check the teeth on the crankshaft sprocket, VTC actuator, and exhaust camshaft sprocket for wear and damage. If any of them worn or damaged, replace if necessary.

9. Check the oil passage on the auto-tensioner for clog. If the auto-tensioner is clogged, replace it.

10. Remove the power steering (P/S) pump. Do not disconnect the P/S hoses from the pump (see step 21 on page 5-5).

11. Attach the universal eyelet to the drive belt auto-tensioner (see step 54 on page 5-10).

12. Remove the top corner clip from the front grill on both sides. Place the engine support mount pads over the hood edge cushions, and align the pins with the clip hole. Remove the lids from both side of the cowl cover. Install the engine support hanger (AAR-T-12566), then attach the hook to the universal eyelet. Tighten the wing nut by hand to lift and support the engine/transmission assembly (see step 5 on page 8-21).

13. Remove the oil pan (see page 7-11).

14. Measure the oil pump chain auto-tensioner rod length.

    **Oil Pump Chain Auto-Tensioner Rod Length**
    **Service Limit: 13 mm (0.5 in.)**

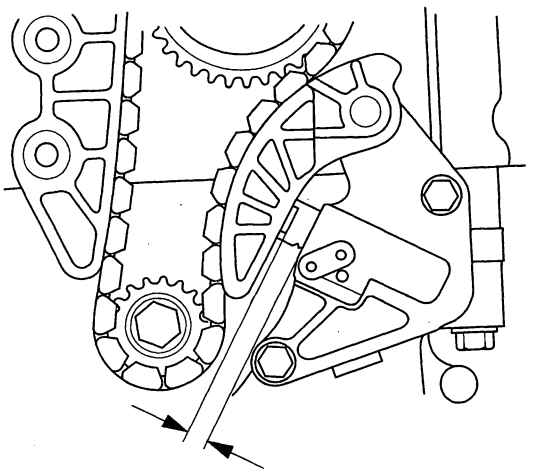

15. If the length is over the service limit, replace the oil pump chain (see page 8-21). When replacing, check the teeth on the crankshaft sprocket and oil pump sprocket for wear and damage. If any of them are worn or damaged, replace if necessary.

16. Check the oil passage on the oil pump chain auto-tensioner for clogs. If the auto-tensioner is clogged, replace it.

17. Install the oil pan (see page 7-29).

18. Support the engine with a jack and a wood block under the oil pan.

19. Remove the special tools from the engine and vehicle.

20. Install new cam chain (see page 6-16).

21. Install the P/S pump (see step 38 on page 5-17).

22. Install the cylinder head cover (see page 6-29).

23. Install four spark plugs.

24. Install the splash shield (see step 30 on page 5-16).

25. Install the front wheels.

Protected by AR



## CKP Pulse Plate Replacement

1. Remove the front wheels.
2. Remove the splash shield (see step 25 on page 5-6).
3. Remove the drive belt (see page 4-31).
4. Remove the cylinder head cover (see page 6-28).
5. Set the No. 1 piston at top dead center (TDC). The punch mark on the variable valve timing control (VTC) actuator and the punch mark on the exhaust camshaft sprocket should be at the top. Align the TDC marks on the VTC actuator and exhaust camshaft sprocket (see step 5 on page 6-13).
6. Remove the VTC oil control solenoid valve (see page 11-319).
7. Remove the crankshaft pulley (see page 6-12).
8. Support the engine with a jack and a wood block under the oil pan.
9. Remove the torque rod stiffener and upper torque rod (see step 9 on page 6-13).
10. Remove the ground cable, then remove the side engine mount bracket (see step 10 on page 6-13).
11. Remove the side engine mount bracket (see step 11 on page 6-14).
12. Remove the cam chain case (see step 12 on page 6-14).
13. Remove the CKP pulse plate.

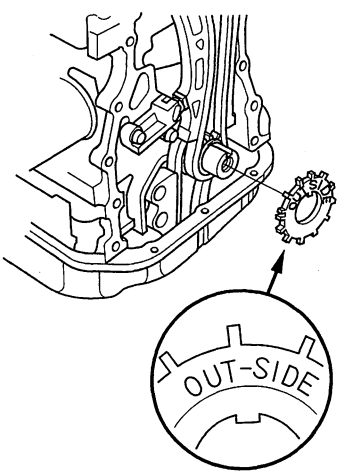


14. Install the CKP pulse plate.
15. Check the chain case oil seal for damage. If the oil seal is damaged, replace the chain case oil seal (see page 6-24).
16. Remove all of the old liquid gasket from the chain case mating surfaces, bolt and bolt holes.
17. Clean, and dry the chain case mating surfaces.
18. Apply liquid gasket, P/N 08717-0004, 08718-0001, 08718-0003, or 08718-0009, evenly to the engine block mating surface of the chain case. Install the component within 5 minutes of applying the liquid gasket (see step 13 on page 6-18).

    NOTE:
    - If you apply liquid gasket P/N 08718-0012, the component must be install within 4 minutes.
    - If too much time has passed after applying the liquid gasket, remove the old liquid gasket and residue, then reapply new liquid gasket.
19. Apply liquid gasket to the engine block upper surface contact areas on the chain case and lower block upper surface contact areas on the chain case (see step 16 on page 6-18).
20. Apply liquid gasket, P/N 08717-0004, 08718-0001, 08718-0003, or 08718-0009, evenly to the oil pan mating surface of the chain case. Install the component within 5 minutes of applying the liquid gasket (see step 17 on page 6-18).

    NOTE:
    - If you apply liquid gasket P/N 08718-0012, the component must be install within 4 minutes.
    - If too much time has passed after applying the liquid gasket, remove the old liquid gasket and residue, then reapply new liquid gasket.



BACK

Protected by AR

21. Install the new O-ring on the chain case. Set the edge of the chain case to the edge of the oil pan, then install the chain case on the engine block (see step 18 on page 6-19). Wipe off the excess liquid gasket on the oil pan and chain case mating area.

    NOTE:
    - When installing the chain case, do not slide the bottom surface onto the oil pan mounting surface.
    - Wait at least 30 minutes before filling the engine with oil.
    - Do not run the engine for at least 3 hours after installing the chain case.

22. Install the side engine mount bracket (see step 19 on page 6-19).

23. Install the side engine mount bracket, then loosely tighten the new bolt and nut, and loosely tighten the bolt. Install the ground cable (see step 20 on page 6-19).

24. Remove the air cleaner housing assembly (see page 11-394).

25. Loosen the transmission mounting bolt and nuts (see step 23 on page 6-20).

26. Raise the lift to full height.

27. Loosen the lower torque rod mounting bolt (see step 25 on page 6-20).

28. Lower the vehicle on the lift.

29. Tighten the side engine mount mounting bolts and nut (see step 27 on page 6-20).

30. Tighten the transmission mounting bolt and nuts (see step 28 on page 6-20).

31. Raise the lift to full height.

32. Tighten the lower torque rod mounting bolt (see step 30 on page 6-21).

33. Lower the vehicle on the lift.

34. Install the air cleaner housing assembly (see page 11-394).

35. Install the upper torque rod and torque rod stiffener, and tighten the new stiffener mounting bolts, then tighten the new upper torque rod mounting bolts in the numbered sequence shown (see step 33 on page 6-21).

36. Install the variable valve timing control (VTC) oil control solenoid valve (see page 11-319).

37. Install the crankshaft pulley (see page 6-12).

38. Install the cylinder head cover (see page 6-29).

39. Install the drive belt (see page 4-31).

40. Do the CKP pattern clear/CKP learn procedure (see page 11-4).

Protected by AR



## Cylinder Head Cover Removal

1. Remove the charge air cooler (see page 9-8).

2. Remove the fuel injector cover.

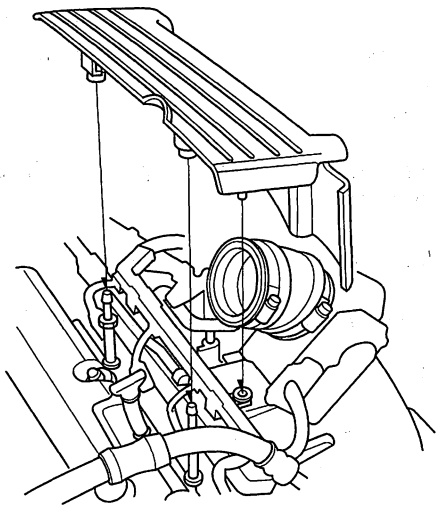

3. Remove the four ignition coils (see page 4-20).

4. Remove the power steering hose bracket (A), breather hose (B), and dipstick (C).

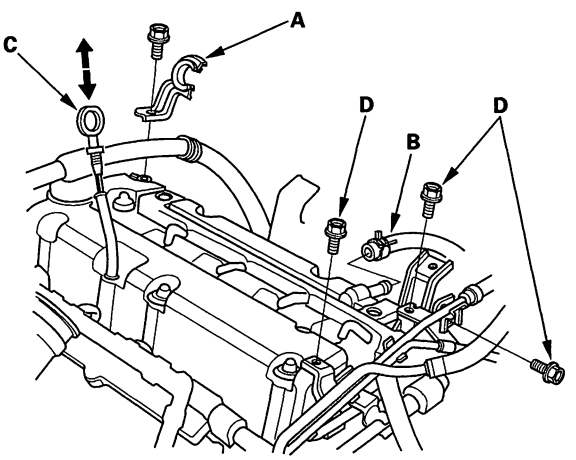


5. Remove the bracket mounting bolts (D) from the cylinder head cover.

6. Disconnect the rocker arm oil control solenoid connector (A), rocker arm oil pressure switch connector (B), and variable valve timing control (VTC) oil control solenoid valve connector (C), then remove the harness clamp (D).

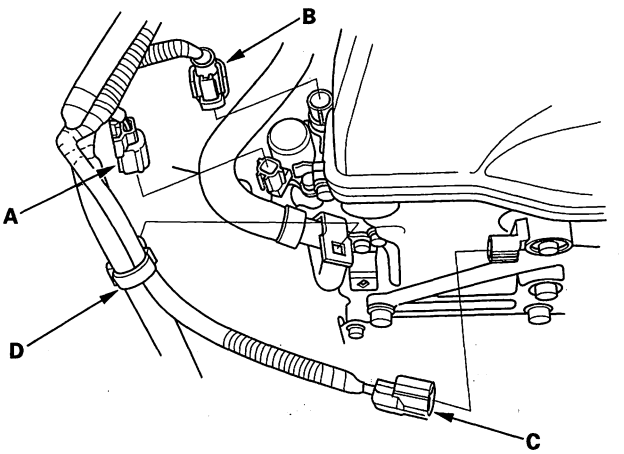


7. Disconnect the air fuel ratio (A/F) sensor connector (A), oil pressure switch connector (B), and crankshaft position (CKP) sensor connector (C), then remove the harness clamps (D).

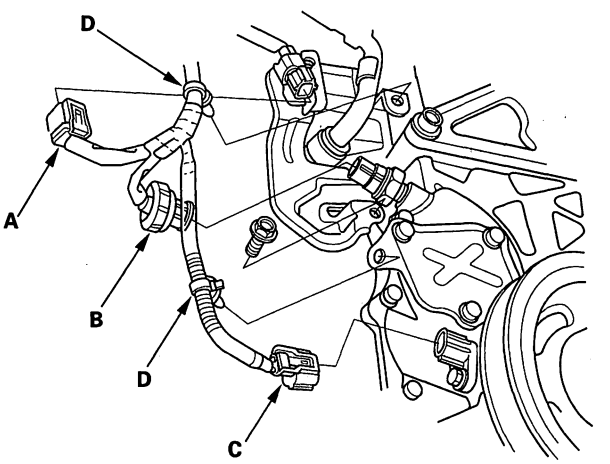




BACK

Protected by AR

8. Remove the cylinder head cover.

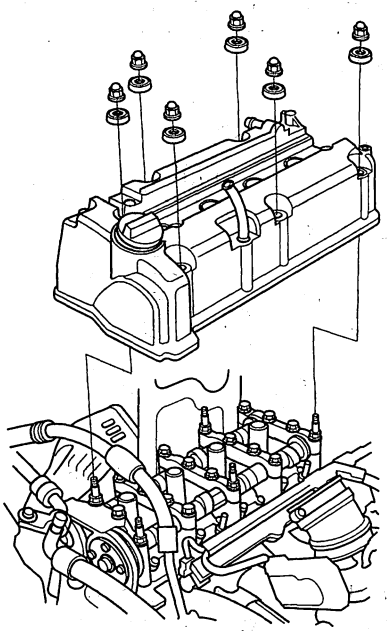

## Cylinder Head Cover Installation

1. Throughly clean the head cover gasket and the groove. Inspect the gasket for signs of damage. Replace if necessary.

2. Install a new head cover gasket (A) in the groove of the cylinder head cover (B).

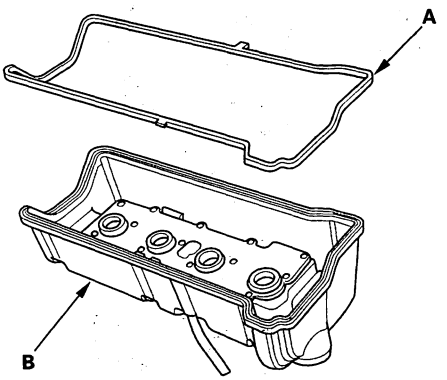


3. Check that the mating surfaces are clean and dry.

4. Apply liquid gasket, P/N 08717-0004, 08718-0001, 08718-0003, or 08718-0009, on the chain case and the No. 5 rocker shaft holder mating areas. Install the component within 5 minutes of applying the liquid gasket.

   NOTE:
   - If you apply liquid gasket P/N 08718-0012, the component must be install within 4 minutes.
   - If too much time has passed after applying the liquid gasket, remove the old liquid gasket and residue, then reapply new liquid gasket.

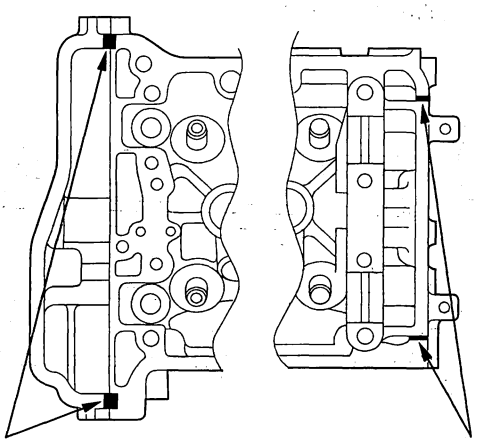

Apply liquid gasket to these points.

Apply liquid gasket to these points.

(cont'd)

Protected by AR



## Cylinder Head Cover Installation (cont'd)

5. Set the spark plug seals (A) on the spark plug tubes. Place the cylinder head cover (B) on the cylinder head, then slide the cover slightly back and forth to seat the head cover gasket.

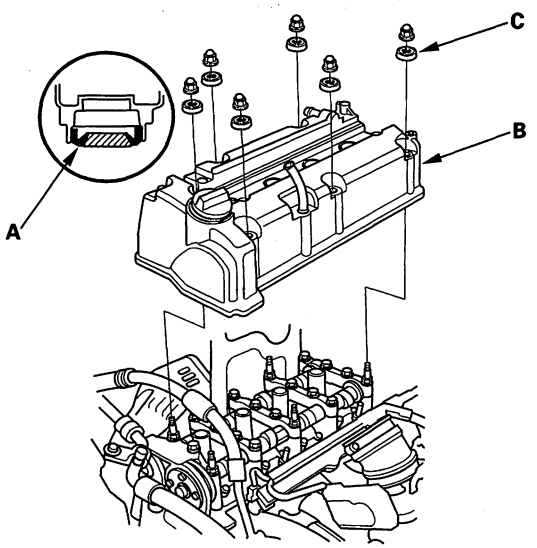


6. Inspect the cover washers (C). Replace any washer that is damaged or deteriorated.

7. Tighten the bolts in two or three steps. In the final step tighten all bolts, in sequence, to 12 N·m (1.2 kgf·m, 8.7 lbf·ft).

   NOTE:
   - Wait at least 30 minutes before filling the engine with oil.
   - Do not run the engine for at least 3 hours after installing the head cover.

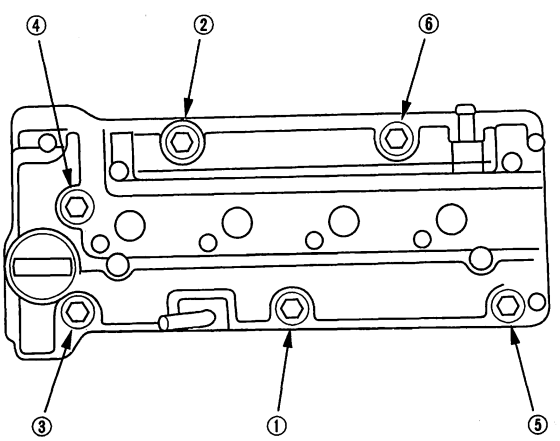


8. Connect the air fuel ratio (A/F) sensor connector (A), oil pressure switch connector (B), and crankshaft position (CKP) sensor connector (C), then install the harness clamps (D).

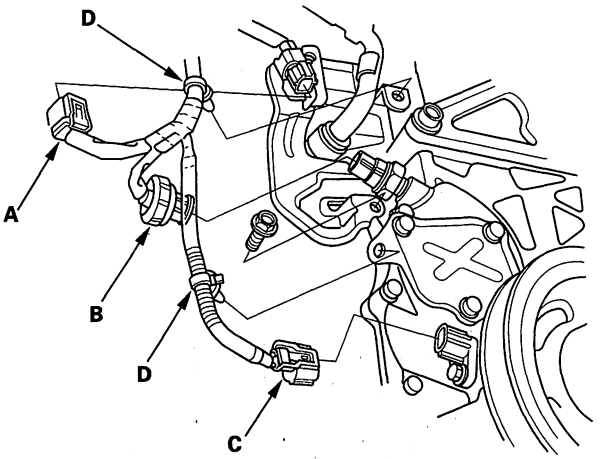


9. Connect the rocker arm oil control solenoid connector (A), rocker arm oil pressure switch connector (B), and variable valve timing control (VTC) oil control solenoid valve connector (C), then install the harness clamp (D).

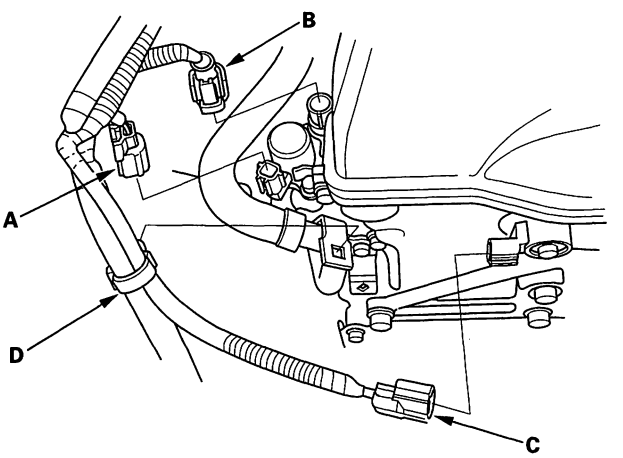




BACK

Protected by AR

10. Install the power steering hose bracket (A), breather hose (B), and dipstick (C).

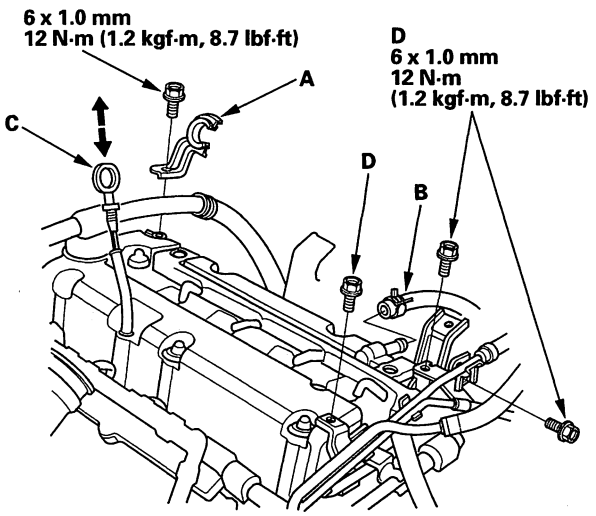


11. Install the bracket mounting bolts (D) to the cylinder head cover.

12. Install the four ignition coils (see page 4-20).

13. Install the fuel injector cover.

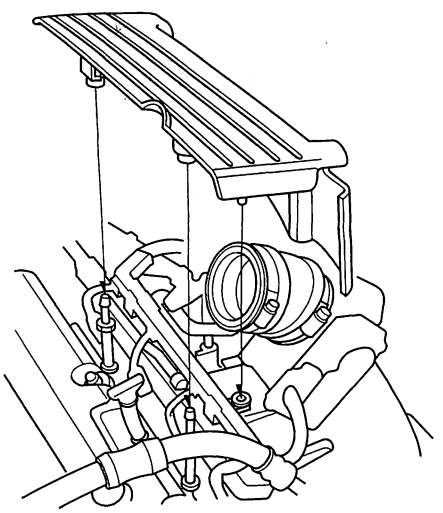

14. Install the charge air cooler (see page 9-9).

## Cylinder Head Removal

NOTE:
- Use fender covers to avoid damaging painted surfaces.
- To avoid damage, unplug the wiring connectors carefully while holding the connector portion.
- To avoid damaging the cylinder head, wait until the engine coolant temperature drops below 100 °F (38 °C) before loosening the cylinder head bolts.
- Mark all wiring and hoses to avoid misconnection. Also, be sure that they do not contact other wiring or hoses, or interfere with other parts.

1. Relieve fuel pressure (see page 11-362).

2. Drain the engine coolant (see page 10-7).

3. Remove the air cleaner housing assembly (see page 11-394).

4. Remove the drive belt (see page 4-31).

5. Remove the intake manifold (see page 9-3).

6. Remove the exhaust manifold (see page 9-13).

7. Remove the engine wire harness connectors and wire harness clamps from the cylinder head.

   - Engine coolant temperature (ECT) sensor 1 connector
   - Camshaft position (CMP) sensor A (Intake) connector
   - Camshaft position (CMP) sensor B (Exhaust) connector
   - EVAP canister purge valve connector

(cont'd)

Protected by AR



## Cylinder Head Removal (cont'd)

8. Remove the quick-connect fitting cover (A), then disconnect the fuel feed hose (see page 11-372).

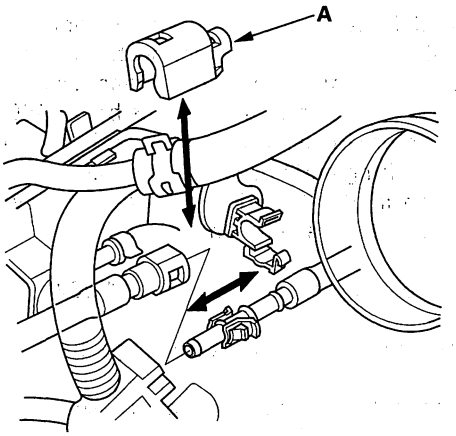


9. Remove the evaporative emission (EVAP) canister hose (A), brake booster vacuum hose (B), and vacuum hose (C).

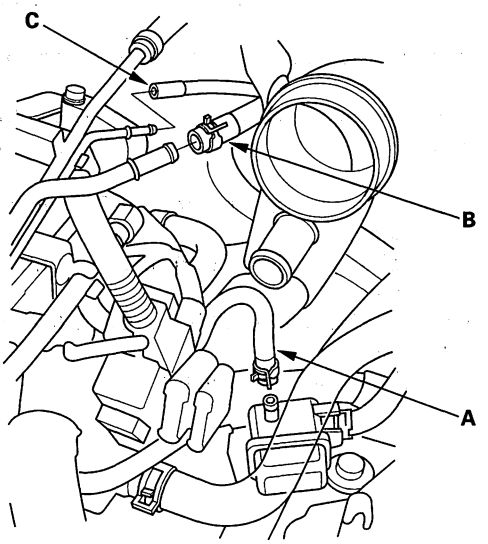


10. Remove the two bolts (A) securing the EVAP canister purge control valve mounting bracket, then remove the harness clamps (B).

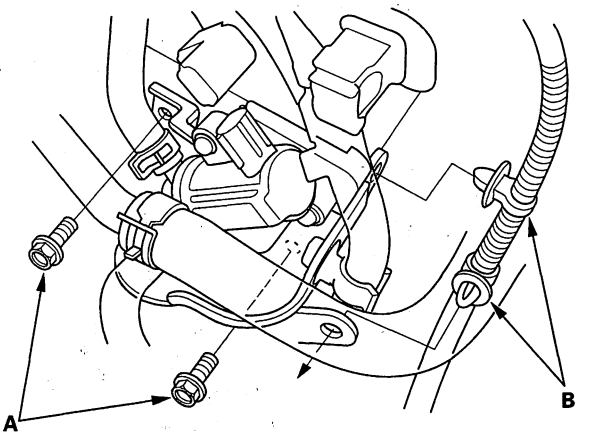


11. Remove the upper radiator hose (A), heater hose (B), and water bypass hose (C).

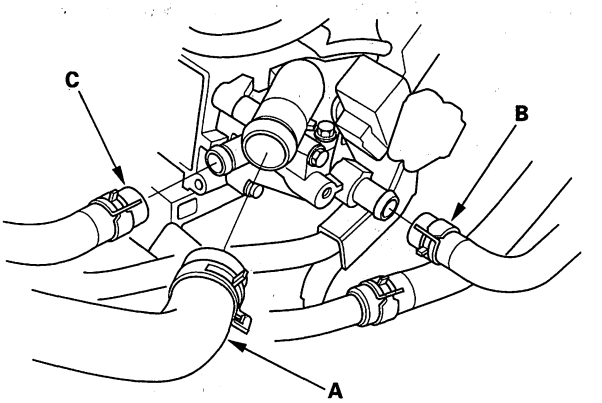




BACK

Protected by AR

12. Remove the cam chain (see page 6-13).

13. Remove the rocker arm assembly (see page 6-37).

14. Remove the cylinder head bolts. To prevent warpage, unscrew the bolts in sequence 1/3 turn at a time; repeat the sequence until all bolts are loosened.

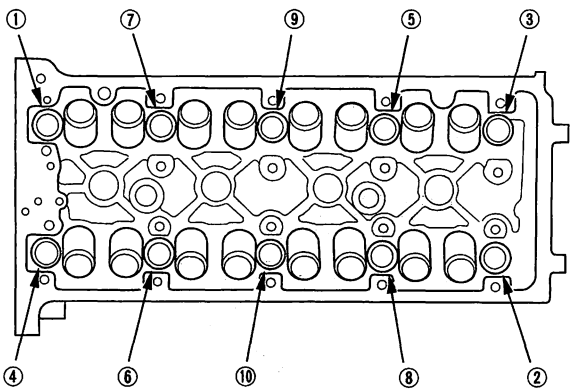


15. Remove the cylinder head.

Protected by AR



## CMP Pulse Plate A Replacement

1. Remove the cylinder head cover (see page 6-28).
2. Remove the camshaft position (CMP) sensor A (see page 11-320).
3. Hold the camshaft with an open-end wrench, then loosen the bolt.

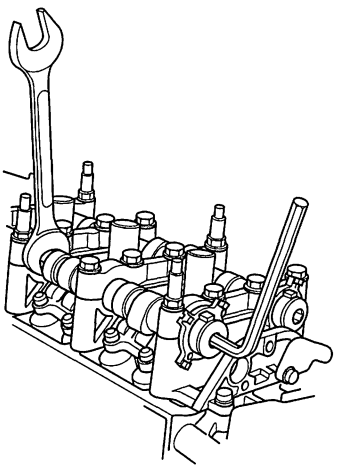

4. Remove the camshaft position (CMP) pulse plate A.

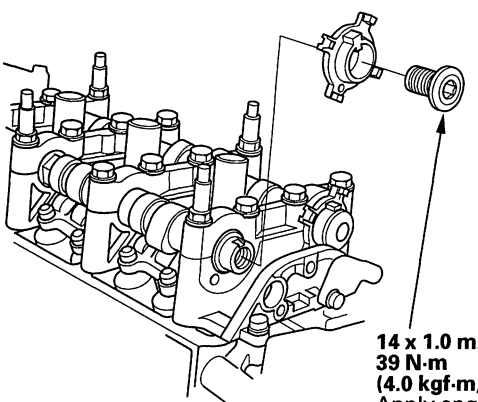

**14 x 1.0 mm**
**39 N·m**
**(4.0 kgf·m, 29 lbf·ft)**
Apply engine oil to the bolt threads.

5. Install the CMP pulse plate A in the reverse order of removal.

## CMP Pulse Plate B Replacement

1. Remove the cylinder head cover (see page 6-28).
2. Remove the camshaft position (CMP) sensor B (see page 11-246).
3. Hold the camshaft with an open-end wrench, then loosen the bolt.

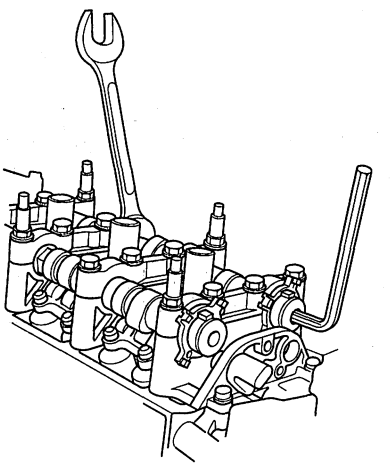

4. Remove the camshaft position (CMP) pulse plate B.

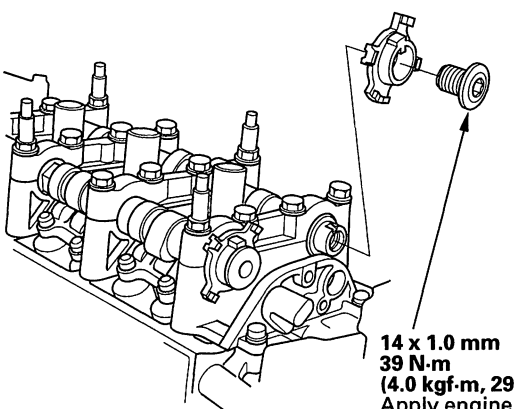

**14 x 1.0 mm**
**39 N·m**
**(4.0 kgf·m, 29 lbf·ft)**
Apply engine oil to the bolt threads.

5. Install the CMP pulse plate B in the reverse order of removal.



BACK

Protected by AR

# VTC Actuator, Exhaust Camshaft Sprocket Replacement

## Removal

1. Remove the cam chain (see page 6-13).

2. Hold the camshaft with an open-end wrench, then loosen the variable valve timing control (VTC) actuator mounting bolt and exhaust camshaft sprocket mounting bolt.

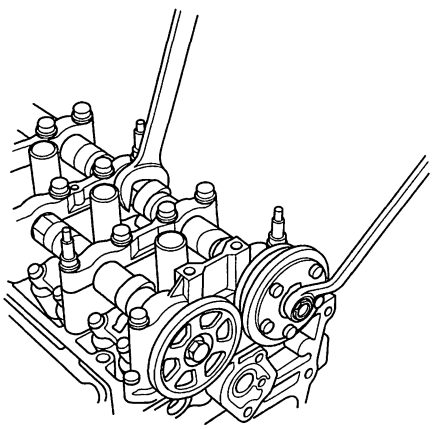

3. If the VTC actuator is reused, do the following steps.

   -1 Remove the intake camshaft, and seal the advance holes and retard holes in the No. 1 camshaft journal with tape (see step 6 on page 6-8).
   -2 Punch a hole in the tape over one of the advance holes (see step 7 on page 6-8).
   -3 Apply air to the advance hole to release the lock (see step 8 on page 6-9).
   -4 Remove the tape and adhesive residue from the camshaft journal.

4. Remove the VTC actuator and exhaust camshaft sprocket.

## Installation

1. Install the VTC actuator and exhaust camshaft sprocket.

   NOTE: Install the VTC actuator to unlock position.

2. Apply engine oil to the threads of the VTC actuator mounting bolt and exhaust camshaft mounting bolt, then install them.

3. Hold the camshaft with an open-end wrench, then tighten the bolts.

   **Specified Torque**
   **VTC Actuator Mounting Bolt:**
   **12 x 1.25 mm**
   **113 N·m (11.5 kgf·m, 83 lbf·ft)**
   **Exhaust Camshaft Sprocket Mounting Bolt:**
   **10 x 1.25 mm**
   **72 N·m (7.3 kgf·m, 53 lbf·ft)**

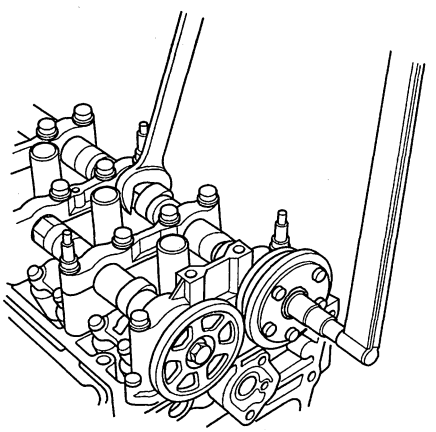

4. Hold the camshaft, and turn the VTC actuator clockwise until you hear it click. Make sure to lock the VTC actuator by turning it.

5. Install the cam chain (see page 6-16).

Protected by AR



## Cylinder Head Inspection for Warpage

1. Remove the cylinder head (see page 6-28).

2. Inspect the camshaft (see page 6-40).

3. Check the cylinder head for warpage. Measure along the edges, and across the center.

   - If warpage is less than 0.05 mm (0.002 in.), cylinder head resurfacing is not required.
   - If warpage is between 0.05 mm (0.002 in.) and 0.2 mm (0.008 in.), resurface the cylinder head.
   - Maximum resurface limit is 0.2 mm (0.008 in.) based on a height of 104 mm (4.09 in.).

   **Cylinder Head Height**
   **Standard (New): 103.95—104.05 mm (4.093—4.096 in.)**

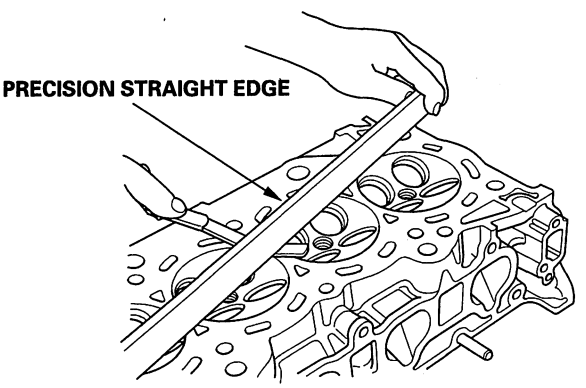


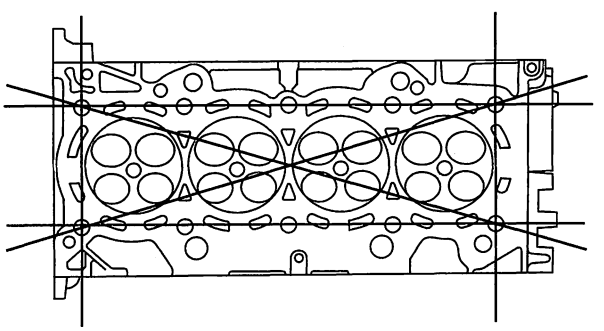



BACK

Protected by AR

## Rocker Arm Assembly Removal

1. Remove the cam chain (see page 6-13).

2. Loosen the rocker arm adjusting screws (A).

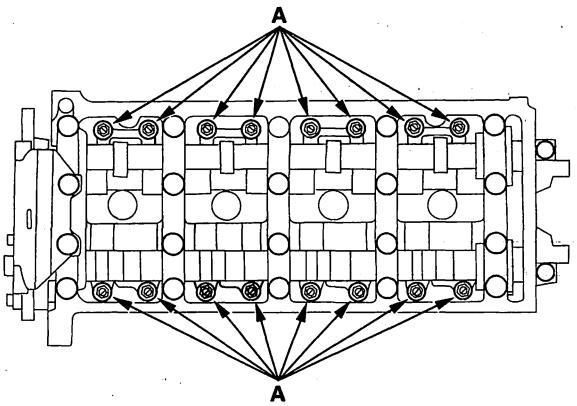


3. Remove the camshaft holder bolts. To prevent damaging the camshafts, unscrew the bolts, in sequence, two turns at a time.

   NOTE: Bolt ① is not on all engines.

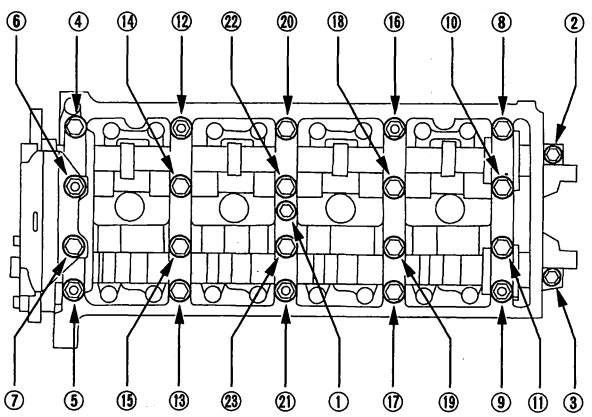


4. Remove the cam chain guide B, camshaft holders, and camshafts.

5. Insert the bolts (A) into the rocker shaft holder, then remove the rocker arm assembly (B).

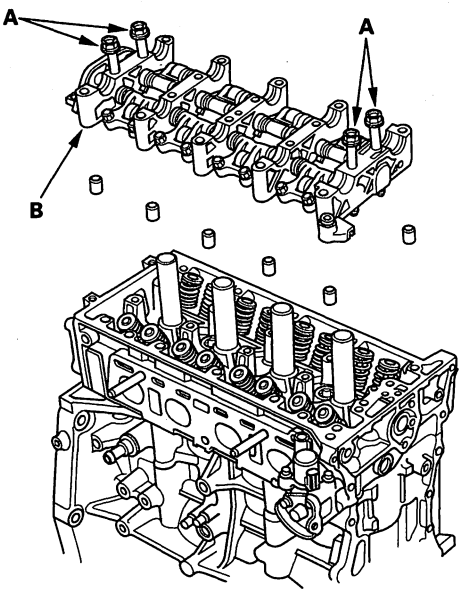

Protected by AR



## Rocker Arm and Shaft Disassembly/Reassembly

NOTE:
- Identify each part as it is removed so that each item can be reinstalled.
- Inspect the rocker arm shaft and rocker arms (see page 6-39).
- If reused, the rocker arms must be installed in the same positions.
- When removing, or installing the rocker arm assembly, do not remove the camshaft holder bolts. The bolts will keep the holders and rocker arms on the shaft.
- Prior to reassembling, clean all the parts in solvent, dry them, and apply lubricant to any contact points.
- Bundle the rocker arms with rubber bands to keep them together as a set.
- When replacing the intake rocker arm assembly, remove the fastening hardware from the new intake rocker arm assembly.

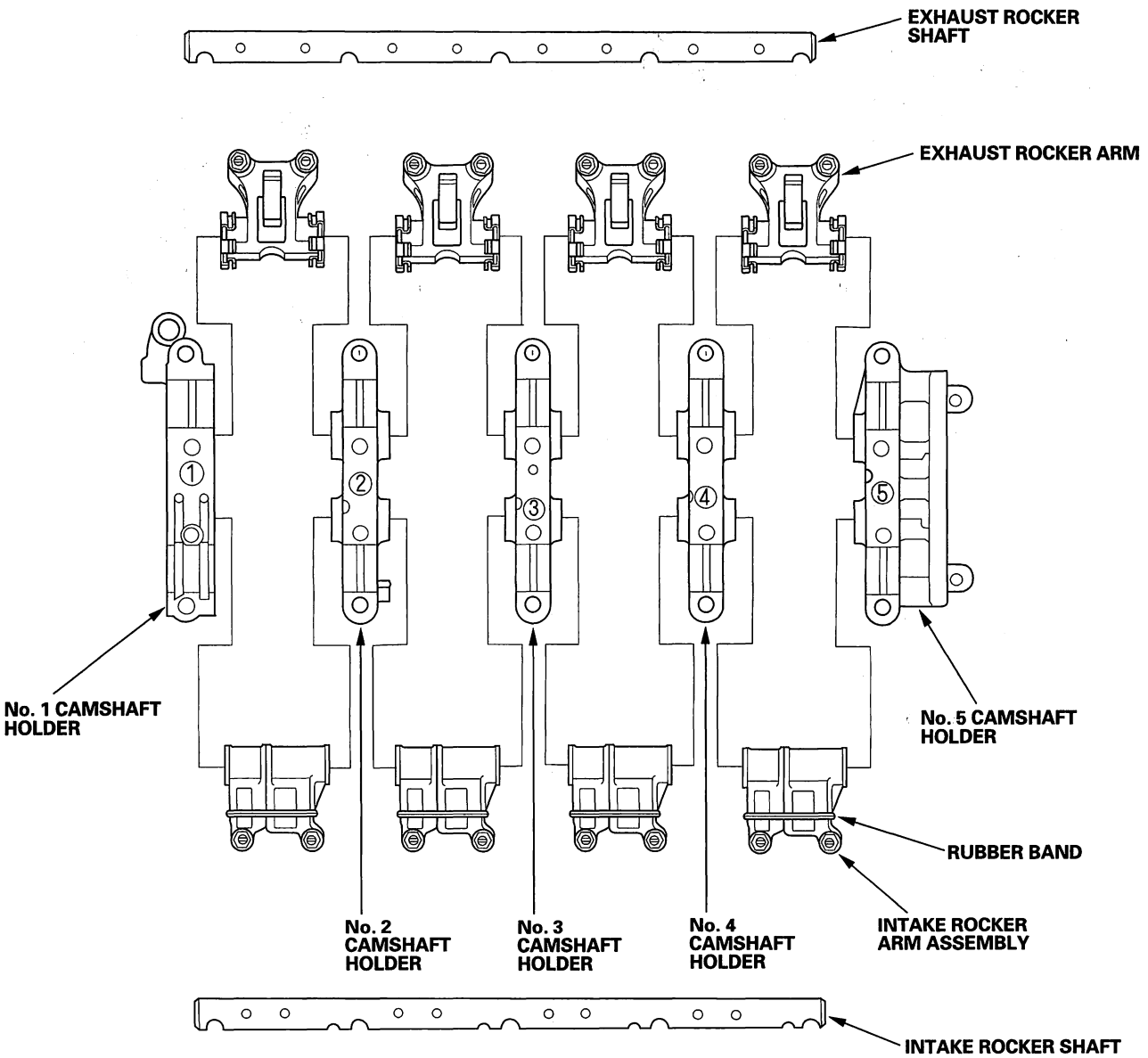




BACK

Protected by AR

## Rocker Arm and Shaft Inspection

1. Remove the rocker arm assembly (see page 6-37).

2. Disassemble the rocker arm assembly (see page 6-38).

3. Measure the diameter of the shaft at the first rocker location.

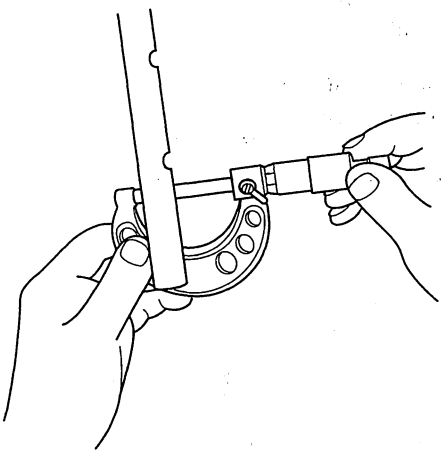

4. Zero the gauge (A) to the shaft diameter.

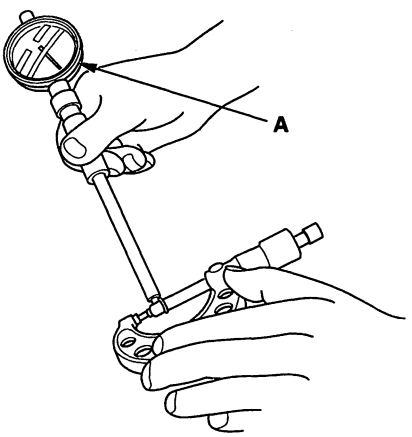


5. Measure the inside diameter of the rocker arm, and check it for an out-of-round condition.

**Rocker Arm-to-Shaft Clearance**
**Standard (New):**

| | |
|---|---|
| **Intake:** | **0.025—0.052 mm (0.0010—0.0020 in.)** |
| **Exhaust:** | **0.018—0.056 mm (0.0007—0.0022 in.)** |
| **Service Limit:** | **0.08 mm (0.003 in.)** |

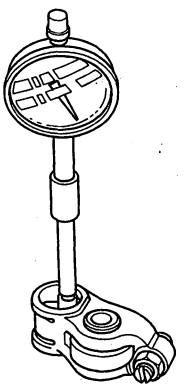

6. Repeat for all rocker arms and both shafts. If the clearance is beyond the service limit, replace the rocker shaft and all out of service limit rocker arms. If any VTEC rocker arm needs replacement, replace the rocker arms (primary and secondary), as a set.

7. Inspect the rocker arm pistons (A). Push on each piston manually. If it does not move smoothly, replace the rocker arm set.

   NOTE: Apply oil to the pistons when reassembling.

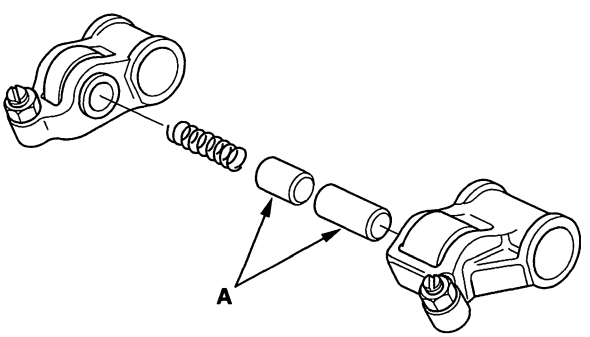


8. Install the rocker arm assembly (see page 6-49).

Protected by AR



## Camshaft Inspection

NOTE: Do not rotate the camshaft during inspection.

1. Remove the rocker arm assembly (see page 6-37).

2. Put the rocker shaft holders, camshaft, and camshaft holders on the cylinder head, then tighten the bolts, in sequence, to the specified torque.

   NOTE: If the engine does not have bolt ㉑, skip it and continue the torque sequence.

   **Specified Torque**
   **8 x 1.25 mm**
   **22 N·m (2.2 kgf·m, 16 lbf·ft)**
   **6 x 1.0 mm**
   **12 N·m (1.2 kgf·m, 8.7 lbf·ft)**
   **6 x 1.0 mm Bolts: ㉑, ㉒, ㉓**

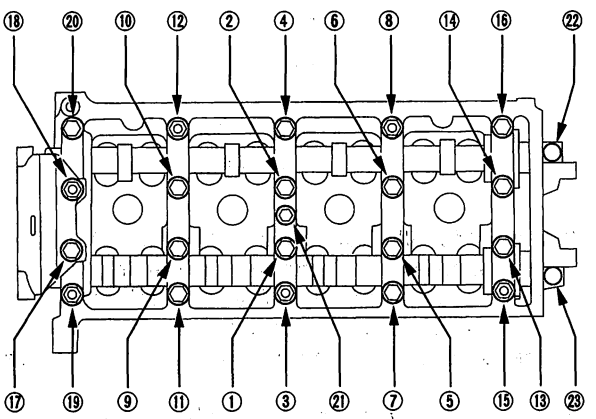


3. Seat the camshaft by pushing it away from the camshaft pulley end of the cylinder head.

4. Zero the dial indicator against the end of the camshaft, then push the camshaft back and forth, and read the end play. If the end play is beyond the service limit, replace the cylinder head and recheck. If it is still beyond the service limit, replace the camshaft.

   **Camshaft End Play**
   **Standard (New): 0.05—0.20 mm (0.002—0.008 in.)**
   **Service Limit: 0.4 mm (0.02 in.)**

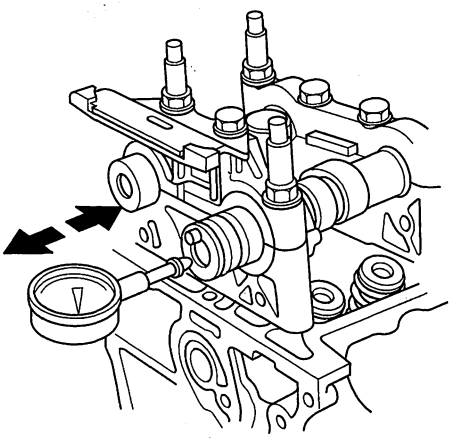



BACK

Protected by AR

5. Unscrew the camshaft holder bolts two turns at a time, in a crisscross pattern. Then remove the camshaft holders from the cylinder head.

6. Lift the camshafts out of the cylinder head, wipe them clean, then inspect the lift ramps. Replace the camshaft if any lobes are pitted, scored, or excessively worn.

7. Clean the camshaft journal surfaces in the cylinder head, then set the camshafts back in place. Place a plastigage strip across each journal.

8. Install the camshaft holders, then tighten the bolts to the specified torque as shown in step 2.

9. Remove the camshaft holders. Measure the widest portion of plastigage on each journal.

   - If the camshaft-to-holder clearance is within limits, go to step 11.
   - If the camshaft-to-holder clearance is beyond the service limit, and the camshaft has been replaced, replace the cylinder head.
   - If the camshaft-to-holder clearance is beyond the service limit, and the camshaft has not been replaced, go to step 10.

**Camshaft-to-Holder Oil Clearance**
**Standard (New):**

| | |
|---|---|
| **No. 1 Journal:** | **0.030—0.069 mm (0.001—0.003 in.)** |
| **No. 2, 3, 4, 5 Journals:** | **0.060—0.099 mm (0.002—0.004 in.)** |
| **Service Limit:** | **0.15 mm (0.006 in.)** |

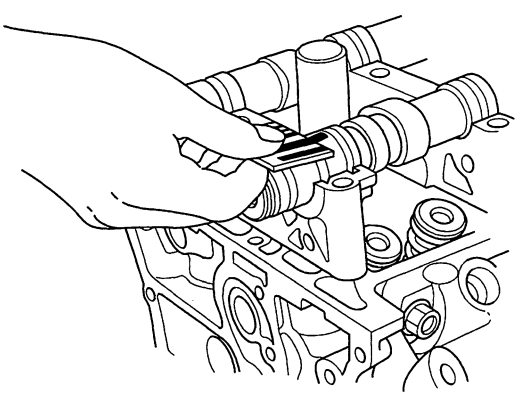

10. Check the total runout with the camshaft supported on V-blocks.

    - If the total runout of the camshaft is within the service limit, replace the cylinder head.
    - If the total runout is beyond the service limit, replace the camshaft, and recheck the camshaft-to-holder oil clearance. If the oil clearance is still beyond the service limit, replace the cylinder head.

**Camshaft Total Runout**
**Standard (New): 0.03 mm (0.001 in.) max.**
**Service Limit: 0.04 mm (0.002 in.)**

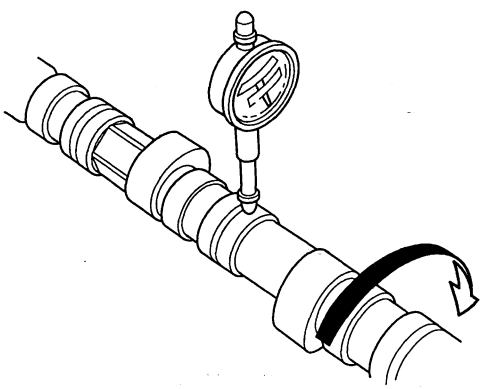

11. Measure cam lobe height.

**Cam Lobe Height Standard (New):**

| | INTAKE | EXHAUST |
|---|---|---|
| PRI | 33.925 mm (1.3356 in.) | 34.092 mm (1.3422 in.) |
| SEC | 29.638 mm (1.1668 in.) | |

PRI: Primary SEC: Secondary C/C: Cam Chain

**INTAKE**

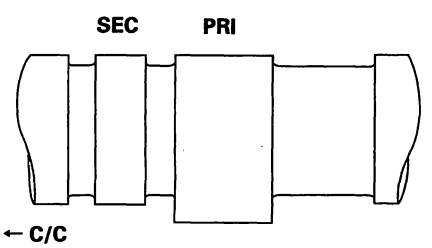

Protected by AR



## Valve, Spring, and Valve Seal Removal

**Special Tools Required**
Valve spring compressor attachment 07757-PJ1010A

Identify the valves and valve springs as they are removed so that each item can be reinstalled in its original position.

1. Remove the cylinder head (see page 6-28).

2. Using an appropriate-sized socket (A) and plastic mallet (B), lightly tap the valve retainer to loosen the valve cotters.

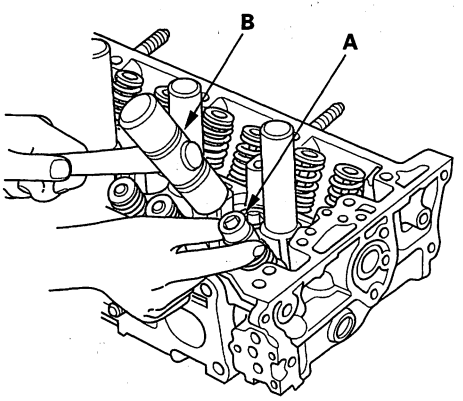


3. Install the valve spring compressor. Compress the spring, and remove the valve cotters.

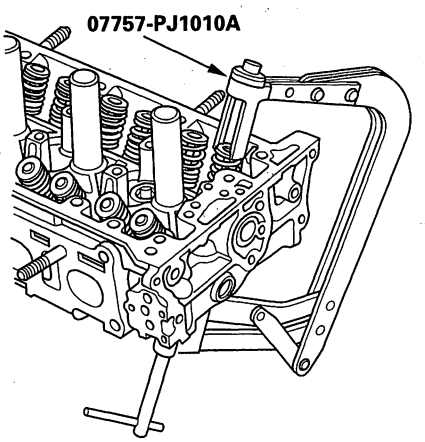


4. Remove the special tool, then remove the valve retainer and valve spring.

5. Install the valve guide seal remover.

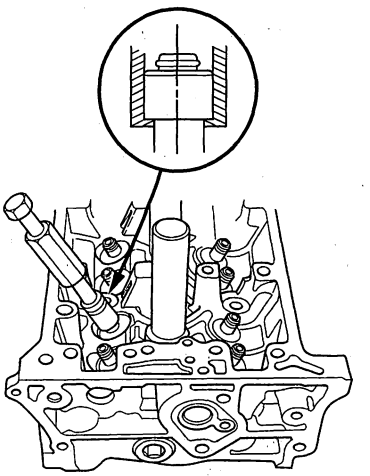

6. Remove the valve seal.

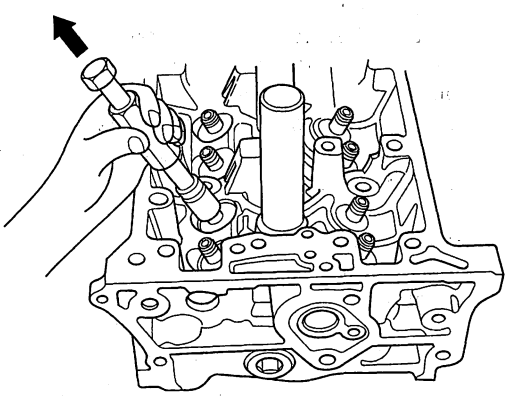



BACK

Protected by AR

## Valve Inspection

1. Remove the valves (see page 6-42).

2. Measure the valve in these areas.

**Intake Valve Dimensions**
**A Standard (New): 34.85—35.15 mm (1.372—1.384 in.)**
**B Standard (New): 108.7—109.5 mm (4.280—4.311 in.)**
**C Standard (New): 5.475—5.485 mm (0.2156—0.2159 in.)**
**C Service Limit: 5.445 mm (0.214 in.)**

**Exhaust Valve Dimensions**
**A Standard (New): 29.85—30.15 mm (1.175—1.187 in.)**
**B Standard (New): 108.4—109.0 mm (4.268—4.291 in.)**
**C Standard (New): 5.450—5.460 mm (0.2146—0.2150 in.)**
**C Service Limit: 5.42 mm (0.213 in.)**

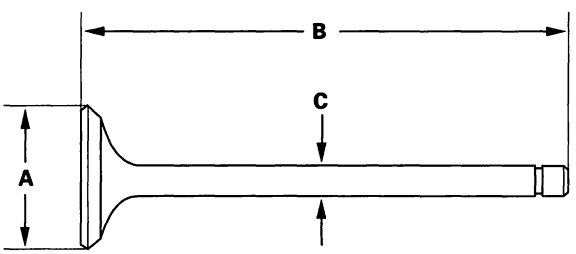


## Valve Stem-to-Guide Clearance Inspection

1. Remove the valves (see page 6-42).

2. Slide the valve out of its guide about 10 mm (0.39 in.), then measure the guide-to-stem clearance with a dial indicator while rocking the stem in the direction of normal thrust (wobble method).
   - If the measurement exceeds the service limit, recheck it using a new valve.
   - If the measurement is now within the service limit, reassemble using a new valve.
   - If the measurement with a new valve still exceeds the service limit, go to step 3.

**Intake Valve Stem-to-Guide Clearance**
**Standard (New): 0.06—0.11 mm (0.002—0.004 in.)**
**Service Limit: 0.16 mm (0.006 in.)**

**Exhaust Valve Stem-to-Guide Clearance**
**Standard (New): 0.11—0.16 mm (0.004—0.006 in.)**
**Service Limit: 0.22 mm (0.009 in.)**

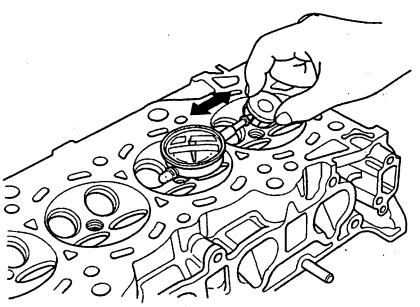

3. Subtract the O.D. of the valve stem, measured with a micrometer, from the I.D. of the valve guide, measured with an inside micrometer or ball gauge. Take the measurements in three places along the valve stem and three places inside the valve guide. The difference between the largest guide measurement and the smallest stem measurement should not exceed the service limit.

**Intake Valve Stem-to-Guide Clearance**
**Standard (New): 0.030—0.055 mm (0.0012—0.0022 in.)**
**Service Limit: 0.08 mm (0.003 in.)**

**Exhaust Valve Stem-to-Guide Clearance**
**Standard (New): 0.055—0.080 mm (0.0022—0.0031 in.)**
**Service Limit: 0.11 mm (0.004 in.)**

Protected by AR



## Valve Guide Replacement

**Special Tools Required**
- Valve guide driver, 5.5 mm 07742-0010100
- Valve guide reamer, 5.5 mm 07HAH-PJ7A100

1. Inspect the valve stem-to-guide clearance (see page 6-43).

2. As illustrated, use a commercially available air-impact valve guide driver (A) modified to fit the diameter of the valve guides. In most cases, the same procedure can be done using the special tool and a conventional hammer.

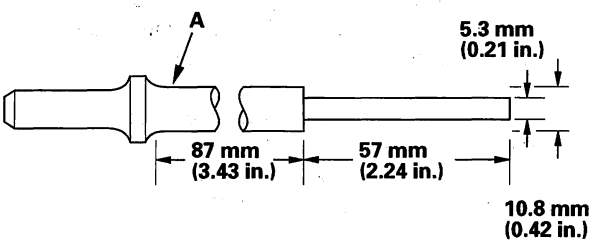


3. Select the proper replacement guides, and chill them in the freezer section of a refrigerator for about an hour.

4. Use a hot plate or oven to evenly heat the cylinder head to 300 °F (150 °C). Monitor the temperature with a cooking thermometer. Do not get the head hotter than 300 °F (150 °C); excessive heat may loosen the valve seats.

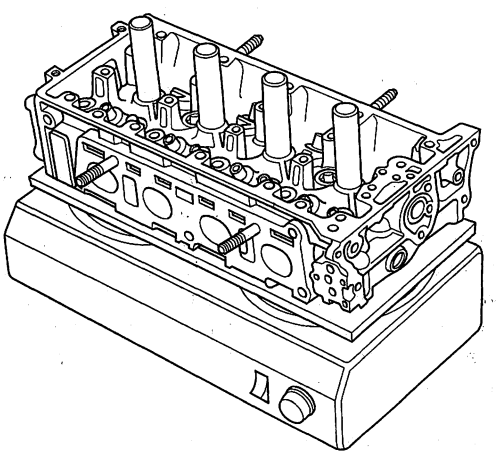

5. Working from the camshaft side, use the driver and an air hammer to drive the guide about 2 mm (0.1 in.) towards the combustion chamber. This will knock off some of the carbon and make removal easier. Hold the air hammer directly in line with the valve guide to prevent damaging the driver.

6. Turn the head over, and drive the guide out toward the camshaft side of the head.

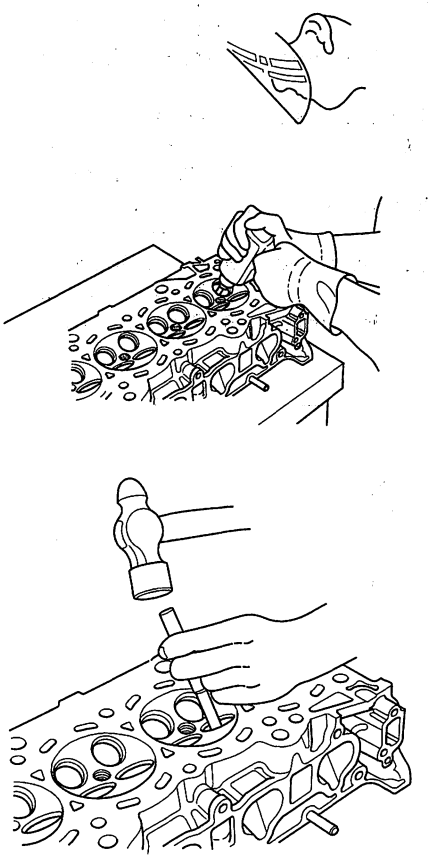

7. If a valve guide won't move, drill it out with a 8 mm (5/16 in.) bit, then try again. Drill guides only in extreme cases; you could damage the cylinder head if the guide breaks.

8. Take out the new guide(s) from the freezer, one at a time, as you need them.



BACK

Protected by AR

9. Apply a thin coat of clean engine oil to the outside of the new valve guide. Install the guide from the camshaft side of the head; use the 5.5 valve guide driver to drive the guide in to the specified installed height (A) of the guide (B). If you have all 16 guides to do, you may have to reheat the head.

**Valve Guide Installed Height**
**Intake: 15.2—16.2 mm (0.598—0.638 in.)**
**Exhaust: 15.5—16.5 mm (0.610—0.650 in.)**

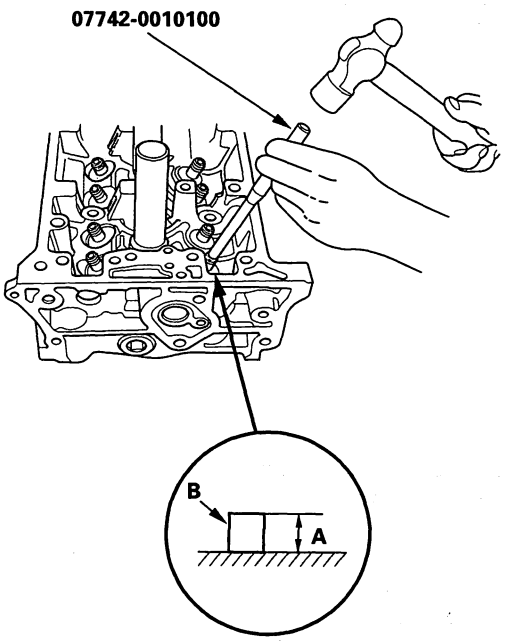


10. Coat both reamer and the valve guide with cutting oil.

11. Rotate the reamer clockwise to the full length of the valve guide bore.

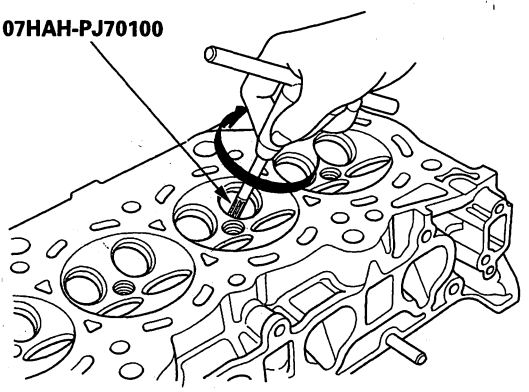


12. Continue to rotate the reamer clockwise while removing it from the bore.

13. Thoroughly wash the guide in detergent and water to remove any cutting residue.

14. Check the clearances with a valve (see page 6-43). Verify that a valve slides into the intake and exhaust valve guides without getting stuck.

Protected by AR



## Valve Seat Reconditioning

1. Inspect the valve stem-to-guide clearance (see page 6-43). If the valve guides are worn, replace them (see page 6-44) before cutting the valve seats.

2. Renew the valve seats in the cylinder head using a valve seat cutter.

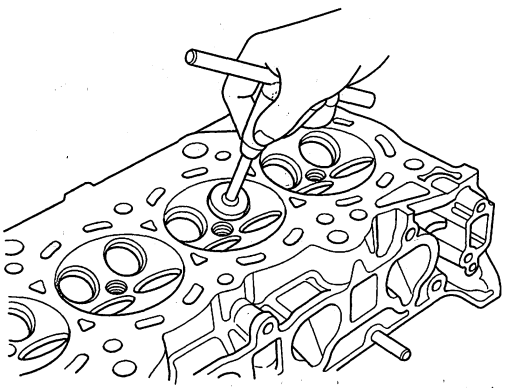

3. Carefully cut a 45 ° seat, removing only enough material to ensure a smooth and concentric seat.

4. Bevel the upper and lower edges at the angles shown in the illustration.
   Check the width of the seat and adjust accordingly.

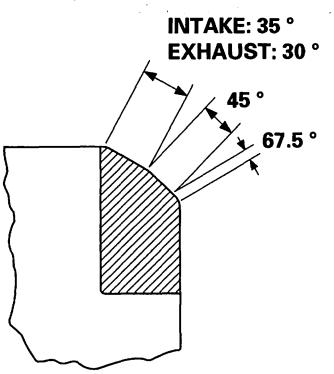


5. Make one more very light pass with the 45 ° cutter to remove any possible burrs caused by the other cutters.

   **Valve Seat Width**
   **Standard (New): 1.25—1.55 mm (0.049—0.061 in.)**
   **Service Limit: 2.00 mm (0.079 in.)**

6. After resurfacing the seat, inspect for even valve seating. Apply Prussian Blue compound (A) to the valve face. Insert the valve in its original location in the head, then lift it and snap it closed against the seat several times.

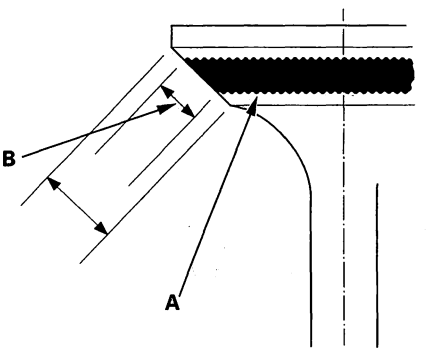


7. The actual valve seating surface (B), as shown by the blue compound, should be centered on the seat.

   - If it is too high (closer to the valve stem), you must make a second cut with the 67.5 ° cutter to move it down, then one more cut with the 45 ° cutter to restore seat width.
   - If it is too low (close to the valve edge), you must make a second cut with the 35 ° cutter (intake side) or the 30 ° cutter (exhaust side) to move it up, then make one more cut with the 45 ° cutter to restore seat width.

   NOTE: The final cut should always be made with the 45 ° cutter.



BACK

Protected by AR

8. Insert the intake and exhaust valves in the head, and measure valve stem installed height (A).

   **Intake Valve Stem Installed Height**
   **Standard (New): 44.0—44.5 mm (1.73—1.75 in.)**
   **Service Limit: 44.7 mm (1.76 in.)**

   **Exhaust Valve Stem Installed Height**
   **Standard (New): 44.1—44.6 mm (1.74—1.76 in.)**
   **Service Limit: 44.8 mm (1.76 in.)**

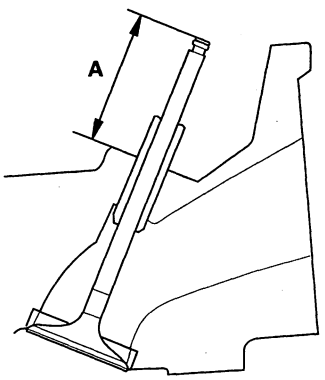


9. If valve stem installed height is beyond the service limit, replace the valve and recheck. If it is still beyond the service limit, replace the cylinder head; the valve seat in the head is too deep.

Protected by AR



## Valve, Spring, and Valve Seal Installation

**Special Tools Required**
- Stem seal driver 07PAD-0010000
- Valve spring compressor attachment 07757-PJ1010A

1. Coat the valve stems with engine oil. Install the valves in the valve guides.

2. Check that the valves move up and down smoothly.

3. Install the spring seats on the cylinder head.

4. Install the new valve seals (A) using the valve guide seal installer (B).

   NOTE: The exhaust valve seal (C) has a black spring (D), and the intake valve seal (E) has a white spring (F). They are not interchangeable.

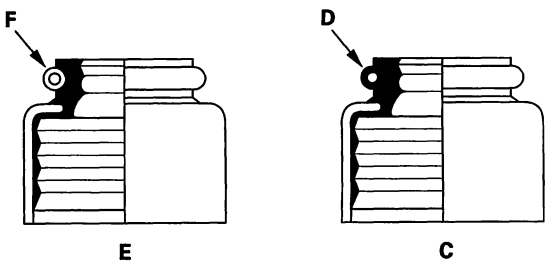


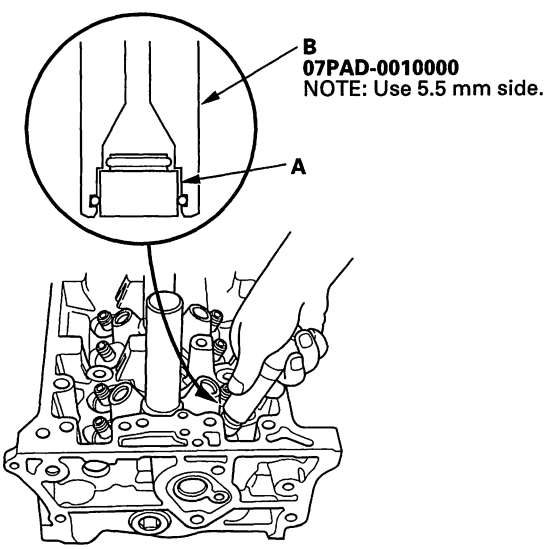


5. Install the valve spring and valve retainer. Place the end of the valve spring with the closely wound coils toward the cylinder head.

6. Install the valve spring compressor. Compress the spring, and install the valve cotters.

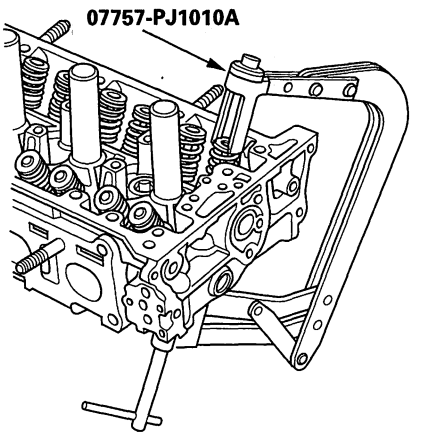


7. Remove the valve spring compressor.

8. Lightly tap the end of each valve stem two or three times with a plastic mallet (A) to ensure proper seating of the valve and valve keepers. Tap the valve stem only along its axis so you do not bend the stem.

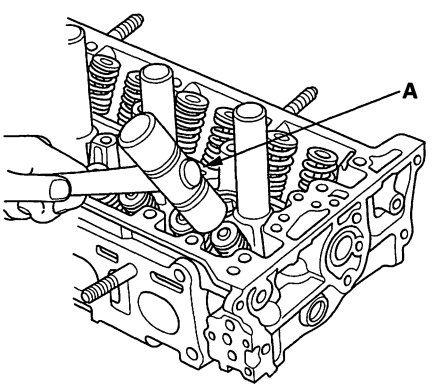




BACK

Protected by AR

## Rocker Arm Assembly Installation

1. Reassemble the rocker arm assembly (see page 6-38).

2. Clean and dry the No. 5 rocker shaft holder mating surface.

3. Apply liquid gasket, P/N 08717-0004, 08718-0001, 08718-0003, or 08718-0009, evenly to the cylinder head mating surface of the No. 5 rocker shaft holder. Install the component within 5 minutes of applying the liquid gasket.

   NOTE:
   - If you apply liquid gasket P/N 08718-0012, the component must be install within 4 minutes.
   - If too much time has passed after applying the liquid gasket, remove the old liquid gasket and residue, then reapply new liquid gasket.

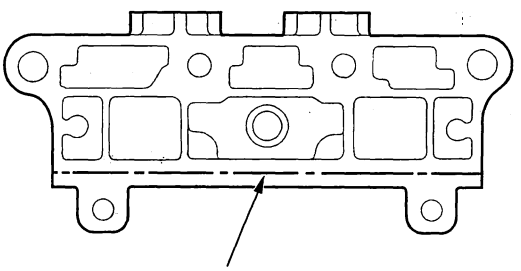

Apply liquid gasket along the broken line.

4. Insert the bolts (A) into the rocker shaft holder, then install the rocker arm assembly (B) on the cylinder head.

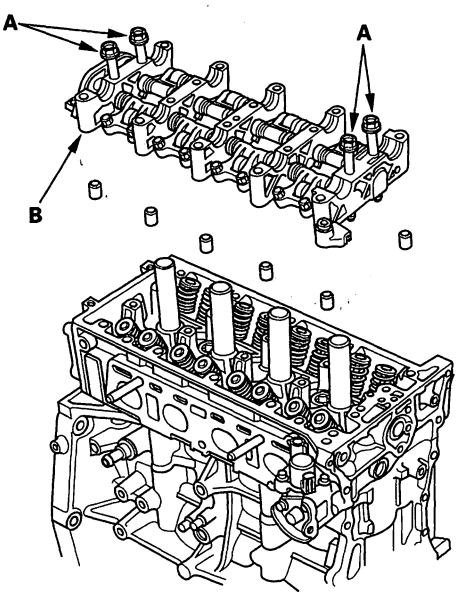


5. Remove the bolts from the rocker shaft holder.

6. Make sure the punch marks on the variable valve timing control (VTC) actuator and exhaust camshaft sprocket are facing up, then set the camshafts (A) in the holder.

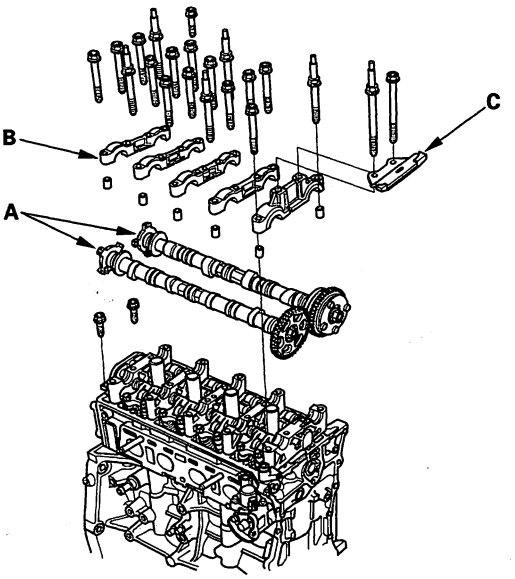


7. Set the camshaft holders (B) and cam chain guide B (C) in place.

8. Tighten the bolts to the specified torque.

   NOTE: If the engine does not have bolt ㉑, skip it and continue the torque sequence.

   **Specified Torque**
   **8 x 1.25 mm**
   **22 N·m (2.2 kgf·m, 16 lbf·ft)**
   **6 x 1.0 mm**
   **12 N·m (1.2 kgf·m, 8.7 lbf·ft)**
   **6 x 1.0 mm Bolts: ㉑, ㉒, ㉓**

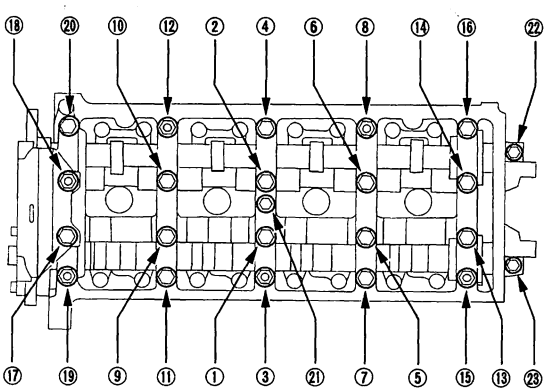


9. Install the cam chain (see page 6-16), and adjust the valve clearance (see page 6-9).

Protected by AR



## Cylinder Head Installation

1. Install a new coolant separator in the engine block whenever the engine block is replaced.

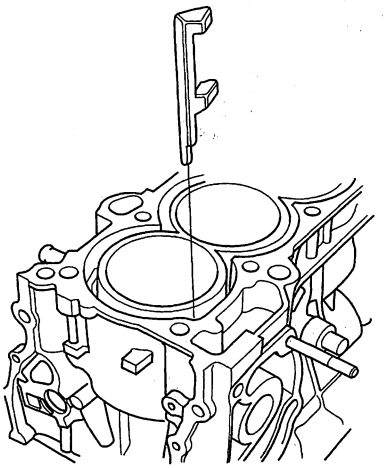

2. Clean the cylinder head and block surface.

3. Install the new cylinder head gasket (A) and dowel pins (B) on the engine block. Always use a new cylinder head gasket.

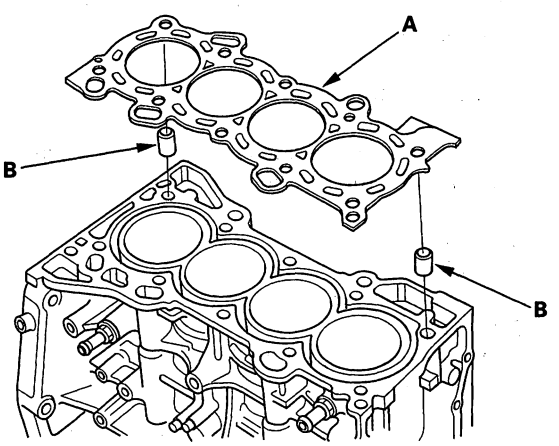


4. Set the crankshaft to top dead center (TDC). Align the TDC mark (A) on the crankshaft sprocket with the pointer (B) on the engine block.

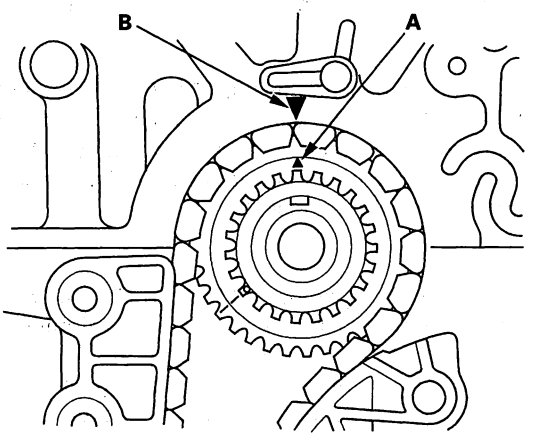


5. Install the cylinder head on the block.

6. Measure the diameter of each cylinder head bolt at point A and point B.

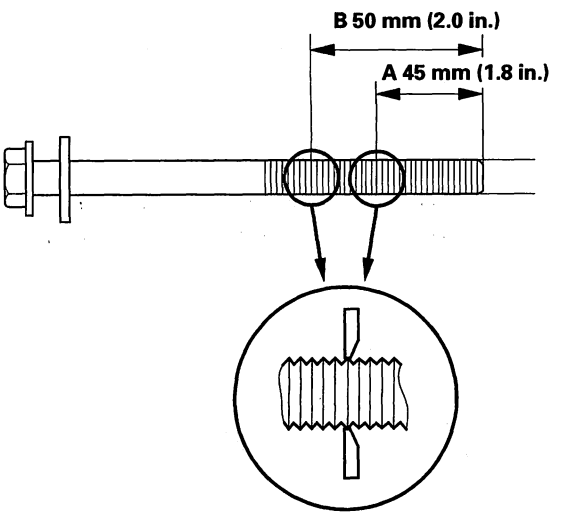


7. If either diameter is less than 10.6 mm (0.42 in.), replace the cylinder head bolt.



BACK

Protected by AR

8. Apply engine oil to the threads and under the bolt heads of all cylinder head bolts.

9. Tighten the cylinder head bolts in sequence to 39 N·m (4.0 kgf·m, 29 lbf·ft). Use a beam-type torque wrench. When using a preset-type torque wrench, be sure to tighten slowly and do not overtighten. If a bolt makes any noise while you are torquing it, loosen the bolt and retighten it from the first step.

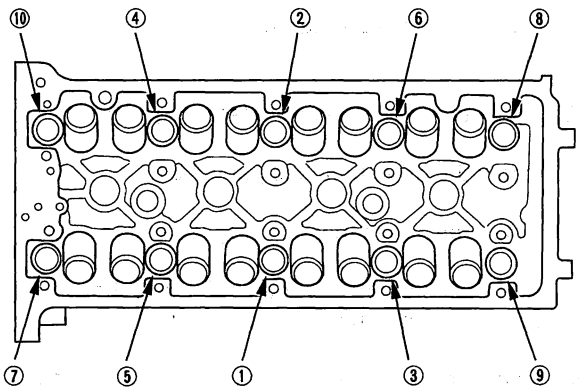


10. After torquing, tighten all cylinder head bolts in two steps (90 ° per step). If you are using a new cylinder head bolt, tighten the bolt an extra 90 °.

NOTE: Remove the cylinder head bolt if you tightened it beyond the specified angle, and go back to step 6 of the procedure. Do not loosen it back to the specified angle.

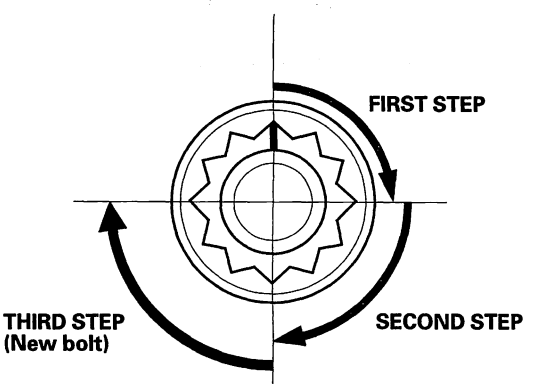


11. Install the rocker arm assembly (see page 6-49).

12. Install the cam chain (see page 6-16).

13. Install the upper radiator hose (A), heater hose (B), and water bypass hose (C).

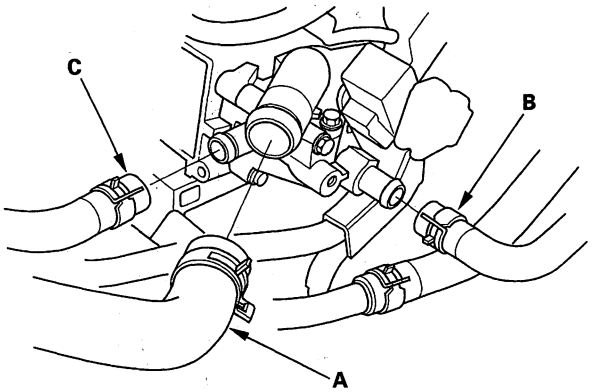


14. Install the harness clamps (A), then install the two bolts (B) securing the evaporative emission (EVAP) canister purge control valve mounting bracket.

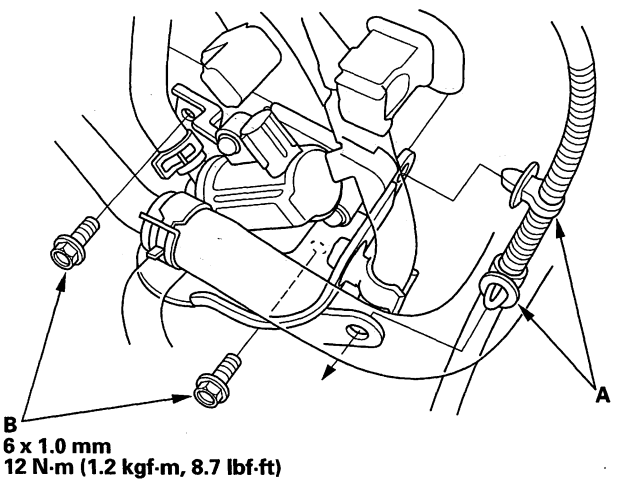


(cont'd)

Protected by AR



## Cylinder Head Installation (cont'd)

15. Install the EVAP canister hose (A), brake booster vacuum hose (B), and vacuum hose (C).

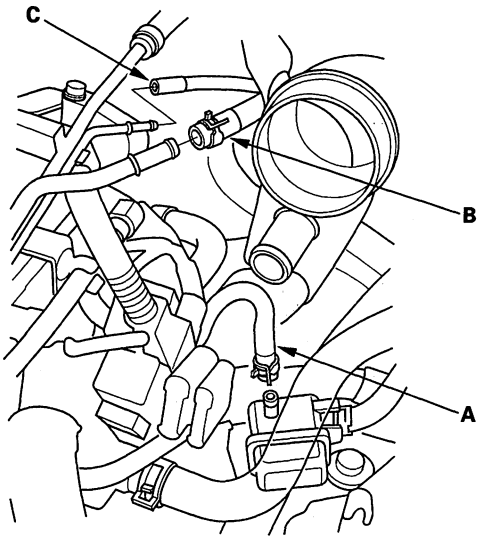


16. Connect the fuel feed hose (see page 11-374), then install the quick-connect fitting cover (A).

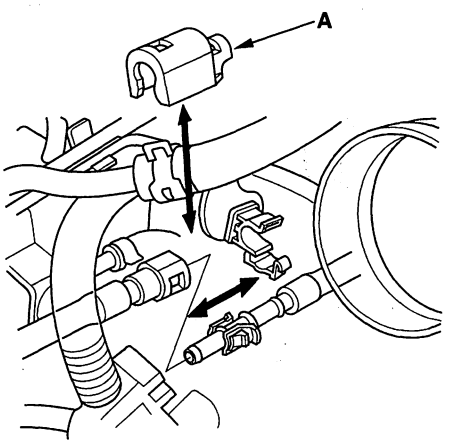


17. Connect the engine wire harness connectors and wire harness clamps to the cylinder head.
    - Engine coolant temperature (ECT) sensor 1 connector
    - Camshaft position (CMP) sensor A (Intake) connector
    - Camshaft position (CMP) sensor B (Exhaust) connector
    - EVAP canister purge valve connector
18. Install the exhaust manifold and turbocharger (see page 9-17).
19. Install the intake manifold (see page 9-5).
20. Install the drive belt (see page 4-31).
21. Install the air cleaner housing (see page 11-394).
22. After installation, check that all tubes, hoses and connectors are installed correctly.
23. Inspect for fuel leaks: Turn the ignition switch ON (II) (do not operate the starter ) so the fuel pump runs for about 2 seconds and pressurizes the fuel line. Repeat this operation two or three times, then check for fuel leakage at any point in the fuel line.
24. Refill the radiator with engine coolant, and bleed the air from the cooling system with the heater valve open (see step 6 on page 10-7).
25. Inspect the idle speed (see page 11-338).
26. Inspect the ignition timing (see page 4-19).



BACK

Protected by AR

## Sealing Bolt Installation

NOTE: When installing the sealing bolt, always use a new washer.

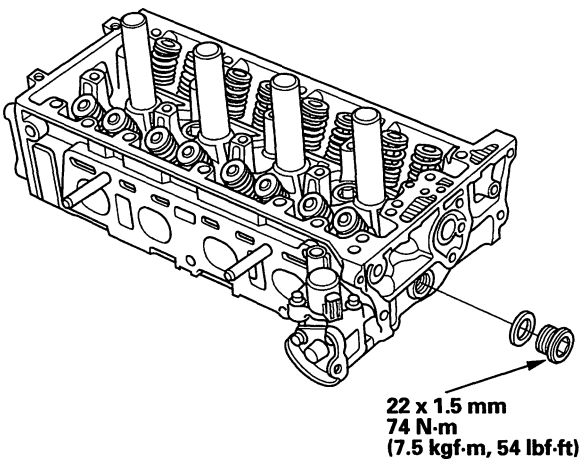

Protected by AR

BACK

Protected by AR

# Engine Mechanical

## Engine Block


Special Tools ..... 7-2
Component Location Index ..... 7-3
Connecting Rod and Crankshaft End Play Inspection ..... 7-5
Crankshaft Main Bearing Replacement ..... 7-6
Connecting Rod Bearing Replacement ..... 7-8
Oil Pan Removal ..... 7-11
Crankshaft and Piston Removal ..... 7-13
Crankshaft Inspection ..... 7-15
Block and Piston Inspection ..... 7-16
Cylinder Bore Honing ..... 7-18
Piston, Pin, and Connecting Rod Replacement ..... 7-19
Piston Ring Replacement ..... 7-22
Piston Installation ..... 7-24
Connecting Rod Bolt Inspection ..... 7-25
Crankshaft Installation ..... 7-26
Oil Pan Installation ..... 7-29
Transmission End Crankshaft Oil Seal Installation - In Car ..... 7-31
Sealing Bolt Installation ..... 7-32


BACK

Protected by AR



## Special Tools

| Ref. No. | Tool Number | Description | Qty |
|---|---|---|---|
| ① | 07ZAD-PNAA100 | Oil Seal Driver Attachment, 96 mm | 1 |
| ② | 07749-0010000 | Driver | 1 |

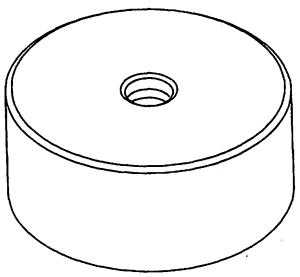

①

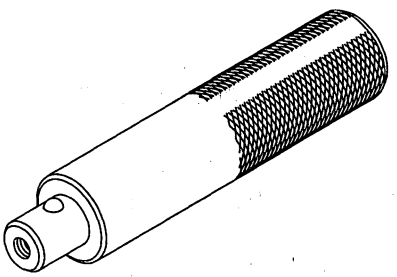

②



BACK

Protected by AR

## Component Location Index

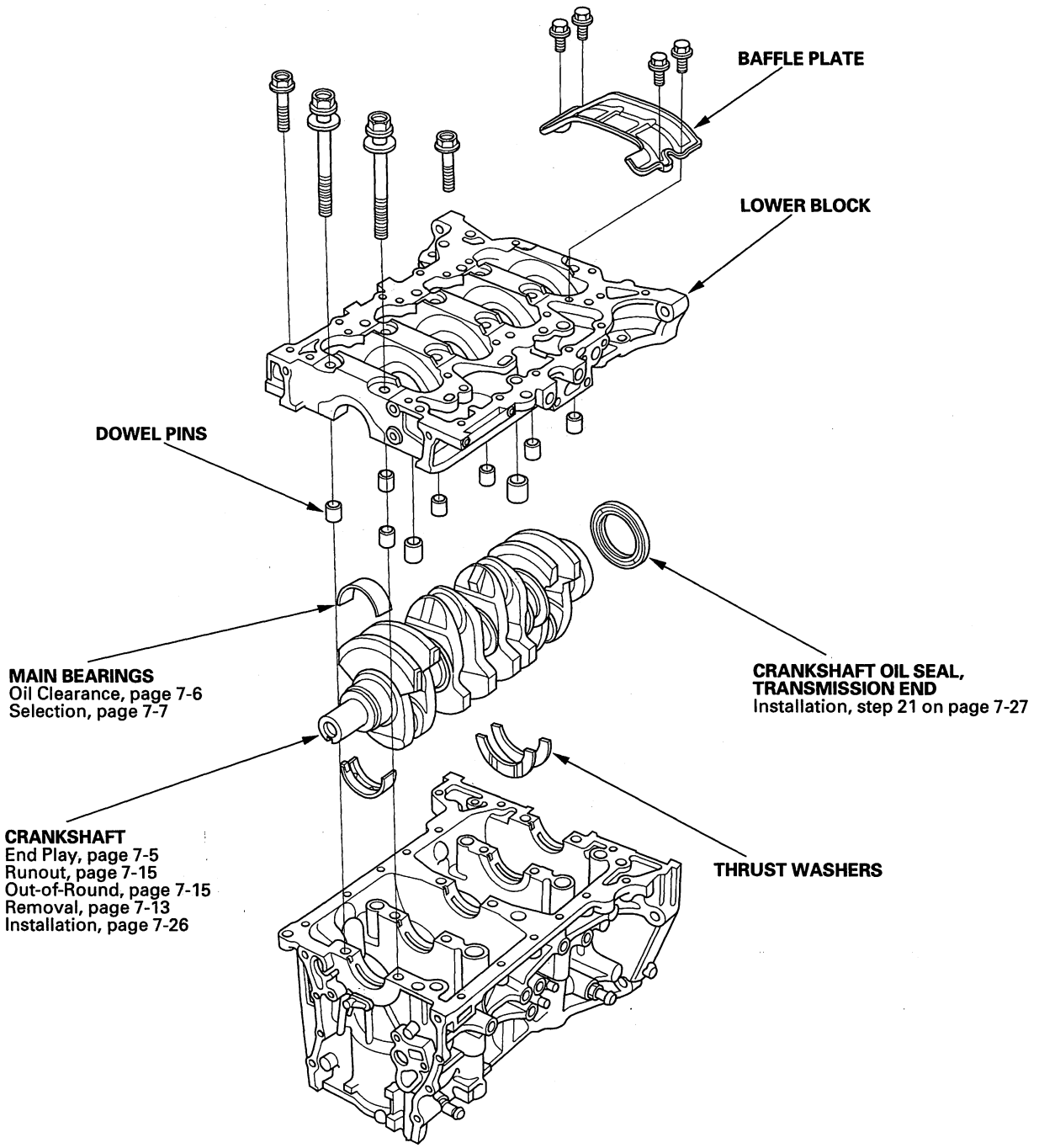


(cont'd)

Protected by AR



## Component Location Index (cont'd)

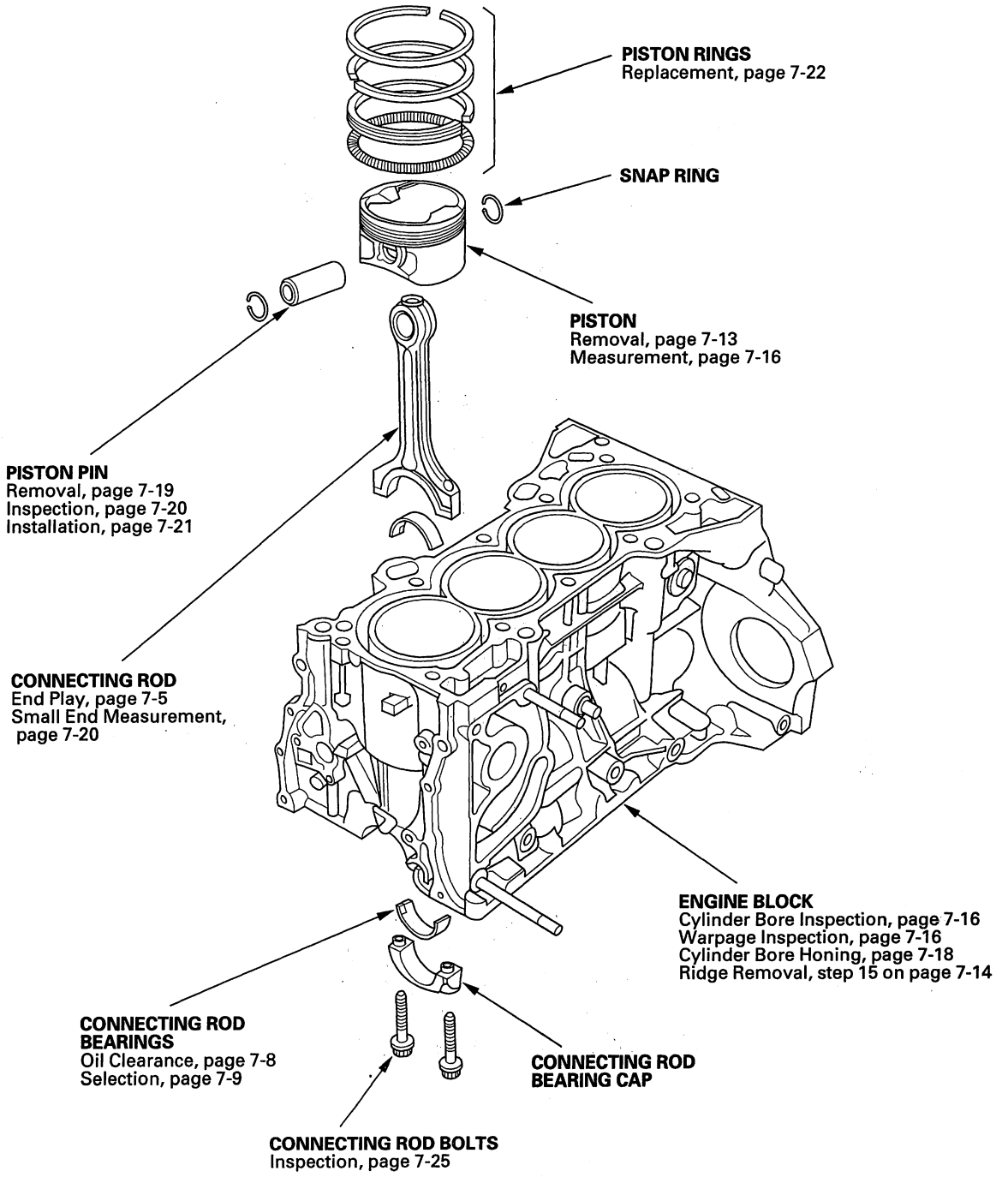




BACK

Protected by AR

## Connecting Rod and Crankshaft End Play Inspection

1. Remove the oil pump (see page 8-14).

2. Remove the baffle plate (see step 7 on page 7-13).

3. Measure the connecting rod end play with a feeler gauge between the connecting rod and crankshaft.

   **Connecting Rod End Play**
   **Standard (New): 0.15—0.35 mm (0.006—0.014 in.)**
   **Service Limit: 0.40 mm (0.016 in.)**

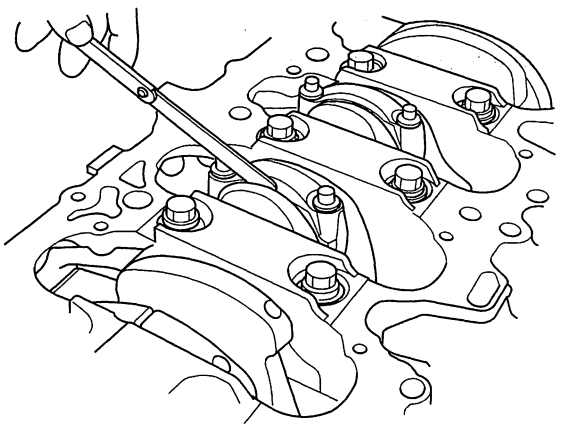

4. If the connecting rod end play is beyond service limit, install a new connecting rod, and recheck. If it is still beyond service limit; replace the crankshaft (see page 7-13).

5. Push the crankshaft firmly away from the dial indicator, and zero the dial against the end of the crankshaft. Then pull the crankshaft firmly back toward the indicator; the dial reading should not exceed the service limit.

   **Crankshaft End Play**
   **Standard (New): 0.10—0.35 mm (0.004—0.014 in.)**
   **Service Limit: 0.45 mm (0.018 in.)**

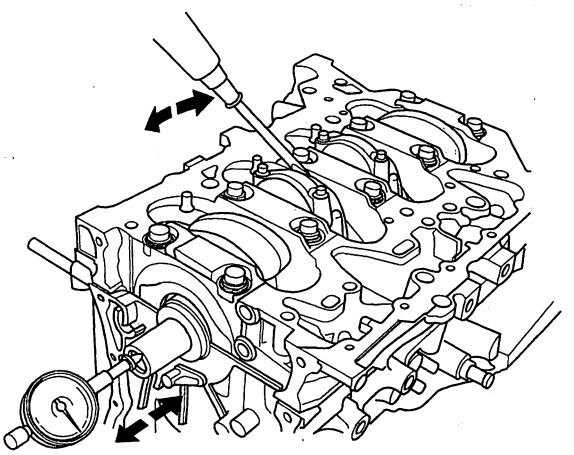

6. If the end play is beyond service limit, replace the thrust washers and recheck, if it is still beyond service limit, replace the crankshaft (see page 7-13).

Protected by AR



## Crankshaft Main Bearing Replacement

### Main Bearing Clearance Inspection

1. To check main bearing-to-journal oil clearance, remove the lower block and bearing halves (see page 7-13).

2. Clean each main journal and bearing half with a clean shop towel.

3. Place one strip of plastigage across each main journal.

4. Reinstall the bearings and lower block, then torque the bolts to 29 N·m (3.0 kgf·m, 22 lbf·ft) + 67 ° in the proper sequence (see step 18 on page 7-27).

   NOTE: Do not rotate the crankshaft during inspection.

5. Remove the lower block and bearings again, and measure the widest part of the plastigage.

   **Main Bearing-to-Journal Oil Clearance**
   **No. 1, 2, 4, 5 Journals:**
   **Standard (New): 0.017 — 0.041 mm (0.0007 — 0.0016 in.)**
   **Service Limit: 0.050 mm (0.0020 in.)**
   **No. 3 Journal:**
   **Standard (New): 0.025 — 0.049 mm (0.0010 — 0.0019 in.)**
   **Service Limit: 0.055 mm (0.0022 in.)**

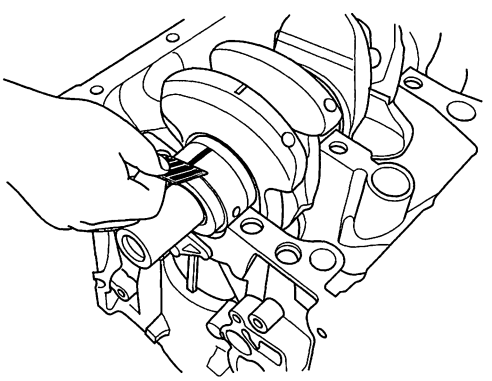

6. If the plastigage measures too wide or too narrow, remove the crankshaft, and remove the upper half of the bearing. Install a new, complete bearing with the same color code(s), and recheck the clearance. Do not file, shim, or scrape the bearings or the caps to adjust clearance.

7. If the plastigage shows the clearance is still incorrect, try the next larger or smaller bearing (the color listed above or below the current one), and check again. If the proper clearance cannot be obtained by using the appropriate larger or smaller bearings, replace the crankshaft and start over.



BACK

Protected by AR

## Main Bearing Selection

### Crankshaft Bore Code Location

1. Numbers, letters, or bars have been stamped on the end of the block as a code for the size of each of the five main journal bores. Write down the crank bore codes.
   If you can't read the codes because of accumulated dirt and dust, do not scrub them with a wire brush or scraper. Clean them only with solvent or detergent.

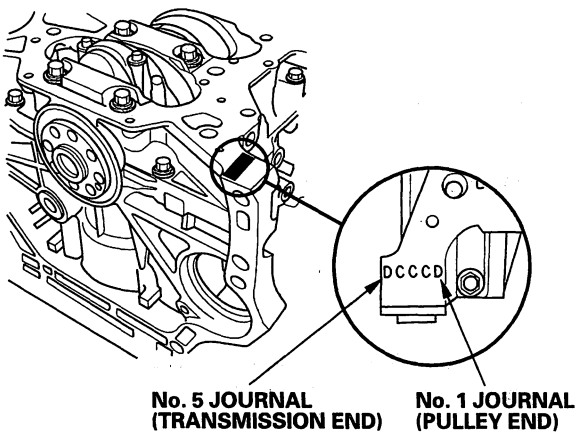


### Main Journal Code Location

2. The main journal codes are stamped on the crankshaft in either location.

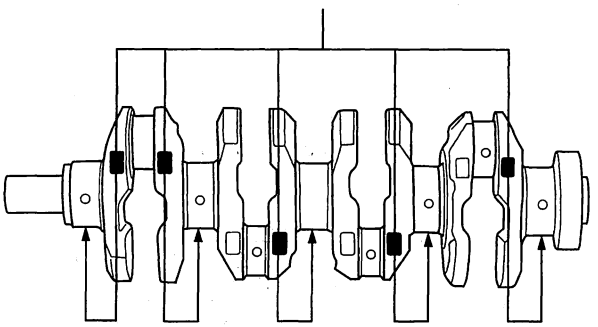

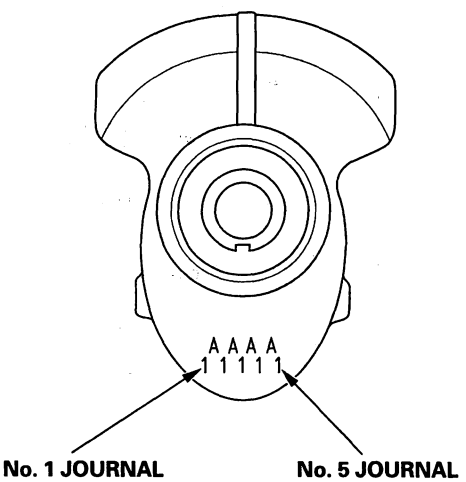


(cont'd)

Protected by AR



## Crankshaft Main Bearing Replacement (cont'd)

3. Use the crank bore codes and crank journal codes to select the appropriate replacement bearings from the following table.

   NOTE:
   - The color code is on the edge of the bearing.
   - When using bearing halves of different colors, it does not matter which color is used in the top or bottom.

| Main journal code (Smaller main journal) ↓ / Crank bore code (Smaller bearing (Thicker)) ↓ | 1 or A or I | 2 or B or II | 3 or C or III | 4 or D or IIII |
|---|---|---|---|---|
| | → Larger crank bore | | | |
| 1 | Pink | Pink/ Yellow | Yellow | Green |
| 2 | Pink/ Yellow | Yellow | Green | Green/ Brown |
| 3 | Yellow | Green | Green/ Brown | Brown |
| 4 | Green | Green/ Brown | Brown | Black |
| 5 | Green/ Brown | Brown | Black | Black/ Blue |
| 6 | Brown | Black | Black/ Blue | Blue |
| | → Smaller bearing (Thicker) | | | |

## Connecting Rod Bearing Replacement

### Rod Bearing Clearance Inspection

1. Remove the oil pump (see page 8-14).
2. Remove the baffle plate (see step 7 on page 7-13).
3. Remove the connecting rod cap and bearing half.
4. Clean the crankshaft rod journal and bearing half with a clean shop towel.
5. Place plastigage across the rod journal.
6. Reinstall the bearing half and cap, and torque the bolts to 29 N·m (3.0 kgf·m, 22 lbf·ft) + 90 °

   NOTE: Do not rotate the crankshaft during inspection.
7. Remove the rod cap and bearing half, and measure the widest part of the plastigage.

   **Connecting Rod Bearing-to-Journal Oil Clearance**
   **Standard (New): 0.033—0.064 mm (0.0013—0.0025 in.)**
   **Service Limit: 0.077 mm (0.0030 in.)**

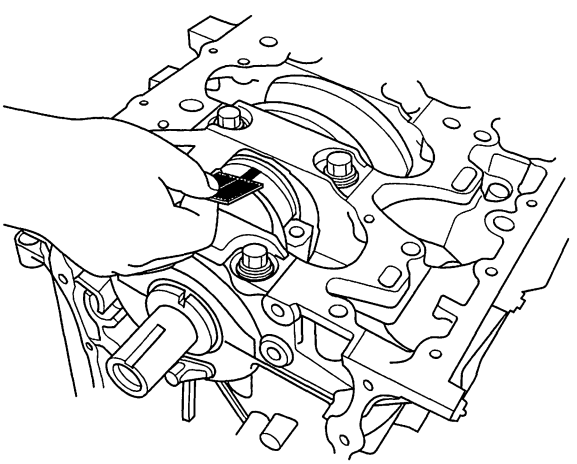



BACK

Protected by AR

8. If the plastigage measures too wide or too narrow, remove the upper half of the bearing, install a new, complete bearing with the same color code(s), and recheck the clearance. Do not file, shim, or scrape the bearings or the caps to adjust clearance.

9. If the plastigage shows the clearance is still incorrect, try the next larger or smaller bearing (the color listed above or below the current one), and check clearance again. If the proper clearance cannot be obtained by using the appropriate larger or smaller bearing, replace the crankshaft and start over.

## Rod Bearing Selection

1. Inspect each connecting rod for cracks and heat damage.

**Connecting Rod Big End Bore Code Locations**

2. Each rod has a tolerance range from 0 to 0.024 mm (0.0009 in.), in 0.006 mm (0.0002 in.) increments, depending on the size of its big end bore. It's then stamped with a number or bar (1, 2, 3, or 4/I, II, III, or IIII) indicating the range. You may find any combination of numbers and bars in any engine. (Half the number or bar is stamped on the bearing cap, the other half is on the rod.)
   If you can't read the code because of an accumulation of oil and varnish, do not scrub it with a wire brush or scraper. Clean it only with solvent or detergent.

   **Normal Bore Size: 51.0 mm (2.01 in.)**

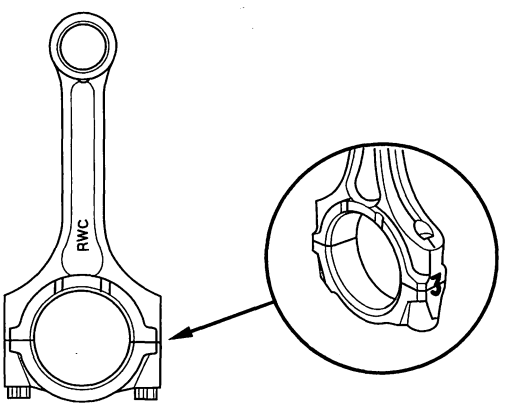


(cont'd)

Protected by AR



## Connecting Rod Bearing Replacement (cont'd)

**Connecting Rod Journal Code Location**

3. The connecting rod journal codes are stamped on the crankshaft in either location.

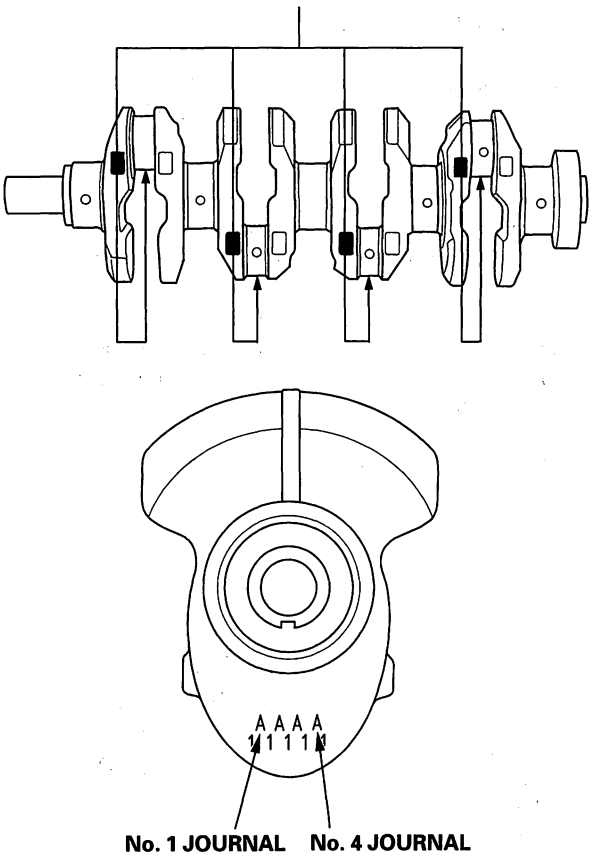


4. Use the big end bore codes and rod journal codes to select appropriate replacement bearings from the following table.

NOTE: The color code is on the edge of the bearing.

Big end bore code → Larger big end bore

Rod journal code ↓ / Smaller bearing (Thicker) →

| Rod journal code | 1 or I | 2 or II | 3 or III | 4 or IIII |
|---|---|---|---|---|
| A | Red | Pink | Yellow | Green |
| B | Pink | Yellow | Green | Brown |
| C | Yellow | Green | Brown | Black |
| D | Green | Brown | Black | Blue |

Smaller rod journal ↓ / Smaller bearing (Thicker) ↓



BACK

Protected by AR

## Oil Pan Removal

**Special Tools Required**
Front subframe adapter VSB02C000016
(Available through American Honda Tool and Equipment Program, 1-888-424-6857)

1. If the engine is out of the vehicle, go to step 14.
2. Raise the vehicle on the lift to full height.
3. Drain the engine oil (see page 8-9).
4. Remove the front wheels.
5. Remove the splash shield (see step 25 on page 5-6).
6. Remove a bolt securing the P/S fluid line bracket, and unclamp the P/S fluid line clamps on the front subframe (see step 34 on page 5-6).
7. Remove the bolts securing the steering gearbox mounting brackets (see step 35 on page 5-6).
8. Remove the two bolts at the three way catalytic converter (TWC) front joint.

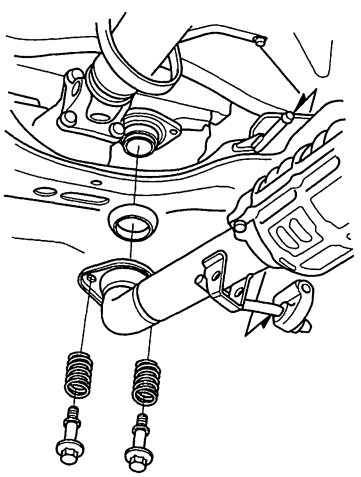

9. Remove the lower torque rod (see step 45 on page 5-8).
10. Attach the subframe adapter (A) to the subframe and hang the belt of the subframe adapter over the front of the subframe, then secure the belt with its stop.

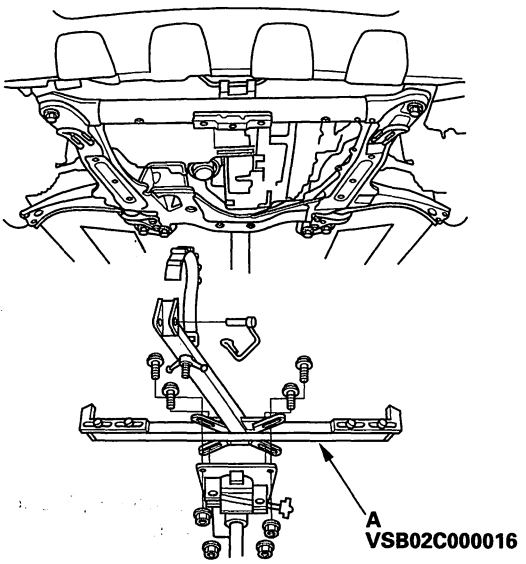


11. Raise the jack and line up the slots in the arms with the bolt holes on the corner of the jack base, then attach them with bolts securely.
12. Remove the 12 x 1.25 mm bolts (A) and 14 x 1.5 mm bolts (B), then loosen the 14 x 1.5 mm bolts (C) on the subframe so they are about 30 mm (1.2 in.) from the mounting surface.

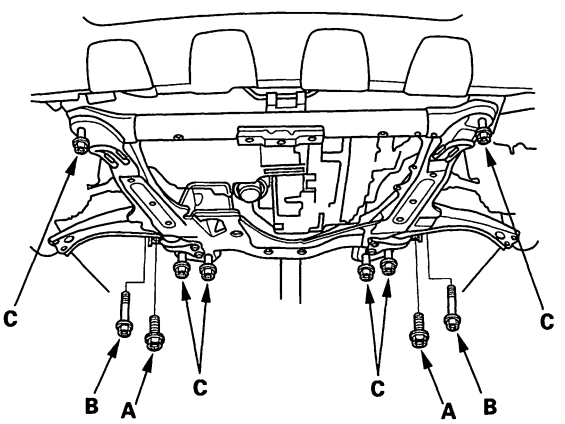


(cont'd)

Protected by AR



## Oil Pan Removal (cont'd)

13. Remove the subframe adapter.

14. Remove the lower torque rod bracket.

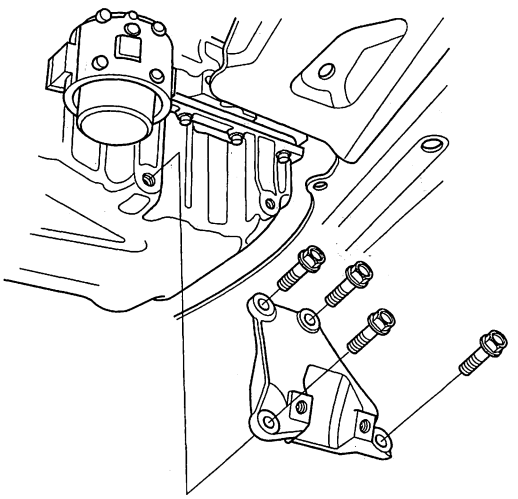

15. Remove the torque converter cover (A) and transmission mounting bolts (B).

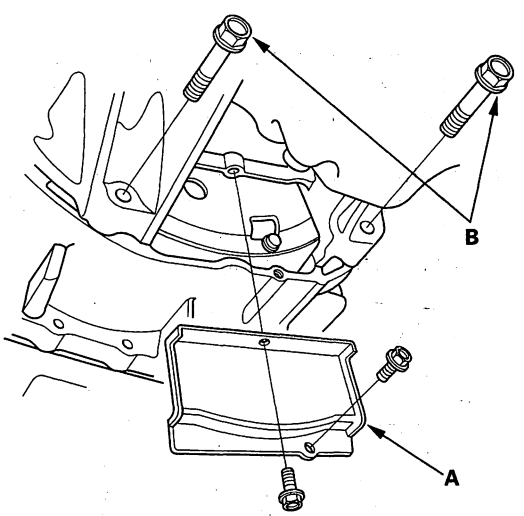


16. Remove the bolts securing the oil pan.

17. Using a flat blade screwdriver, separate the oil pan from the block in the places shown.

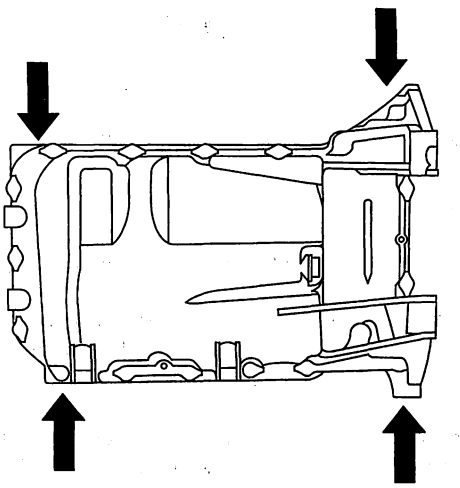



BACK

Protected by AR

## Crankshaft and Piston Removal

1. Remove the engine assembly (see page 5-3).
2. Remove the transmission (see page 14-247).
3. Remove the drive plate (see page 14-270).
4. Remove the oil pan (see page 7-11).
5. Remove the oil pump (see page 8-14).
6. Remove the cylinder head (see page 6-31).
7. Remove the baffle plate.

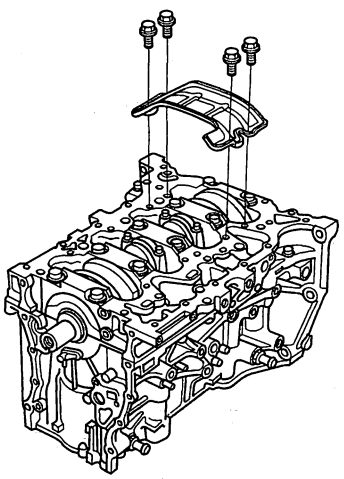

8. Remove the 8 mm bolts in sequence.

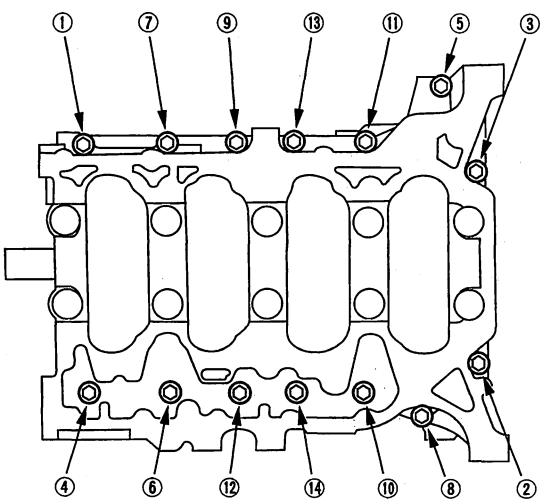


9. Remove the bearing cap bolts. To prevent warpage, unscrew the bolts in sequence 1/3 turn at a time; repeat the sequence until all bolts are loosened.

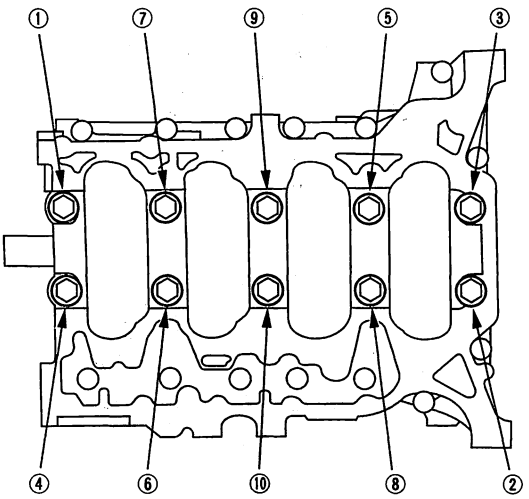


10. Using a flat blade screwdriver, separate the lower block from the engine block in the places shown.

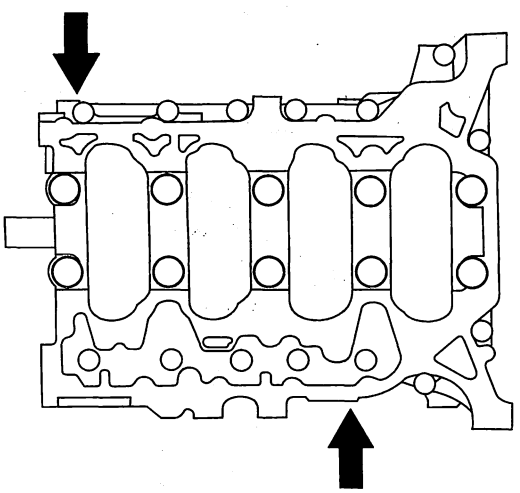

(cont'd)

Protected by AR



## Crankshaft and Piston Removal (cont'd)

11. Remove the lower block and bearings. Keep all the bearings in order.

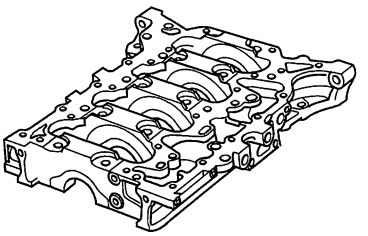

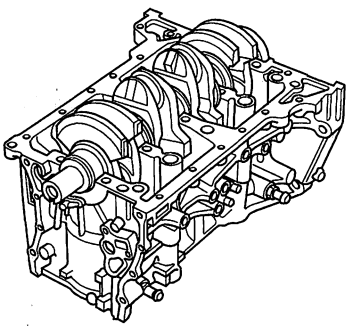

12. Remove the rod caps/bearings. Keep all caps/bearings in order.

13. Lift the crankshaft out of the engine. Being careful not to damage the journals.

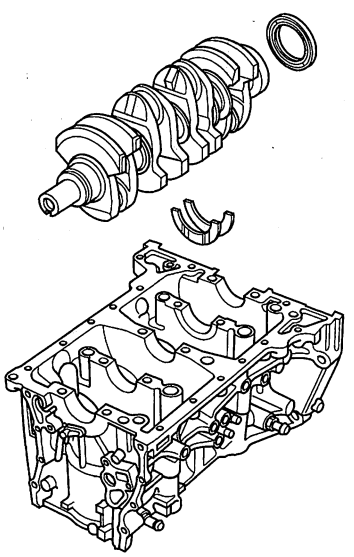

14. Remove the upper bearing halves from the connecting rods, and set them aside with their respective caps.

15. If you can feel a ridge of metal or hard carbon around the top of each cylinder, remove it with a ridge reamer (A). Follow the reamer manufacturer's instructions. If the ridge is not removed, it may damage the pistons as they are pushed out.

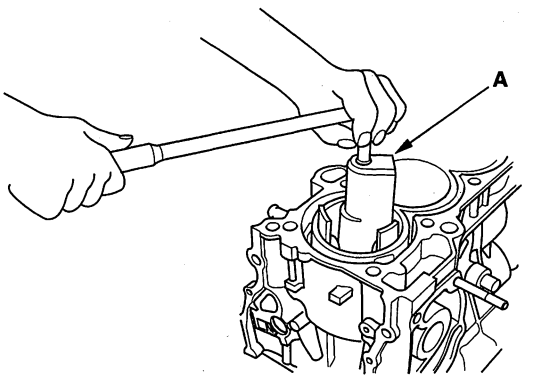


16. Use the wooden handle of a hammer (A) to drive out the piston/connecting rod assembly (B).

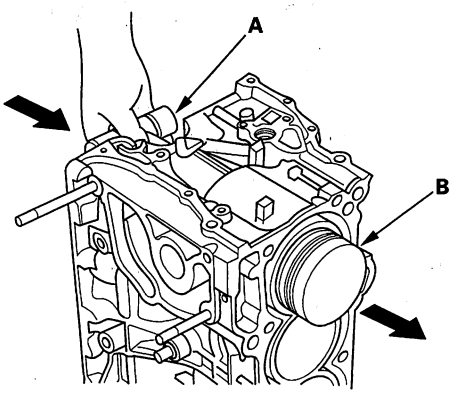


17. Reinstall the lower block and bearings on the engine in the proper order.

18. Reinstall the connecting rod bearings and caps after removing each piston/connecting rod assembly.

19. Mark each piston/connecting rod assembly with its cylinder number to make sure they are reused in the original order.

    NOTE: The existing number on the connecting rod does not indicate its position in the engine, it indicates the rod bore size.



BACK

Protected by AR

## Crankshaft Inspection

### Out-of-Round and Taper

1. Remove the crankshaft from the engine block (see page 7-13).

2. Clean the crankshaft oil passages with pipe cleaners or a suitable brush.

3. Clean the keyway and threads.

4. Measure the out-of-round at the middle of each rod and main journal in two places. The difference between measurements on each journal must not be more than the service limit.

   **Journal Out-of-Round**
   **Standard (New): 0.004 mm (0.0002 in.) max.**
   **Service Limit: 0.010 mm (0.0004 in.)**

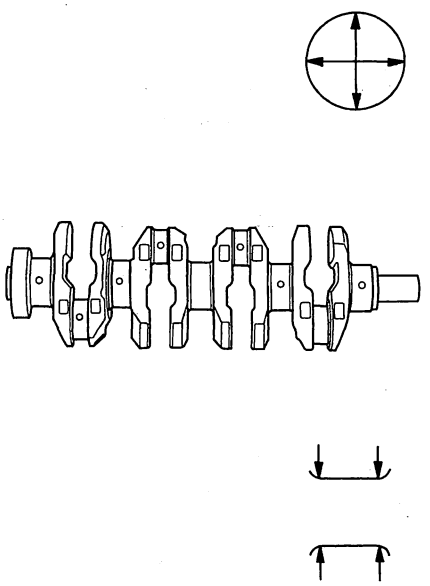

5. Measure the taper at the edges of each rod and main journal. The difference between measurements on each journal must not be more than the service limit.

   **Journal Taper**
   **Standard (New): 0.005 mm (0.0002 in.) max.**
   **Service Limit: 0.010 mm (0.0004 in.)**

### Straightness

6. Place the engine block on the surface plate.

7. Clean and install the bearings on the No. 1 and No. 5 journals of the engine block.

8. Lower the crankshaft into the block.

9. Measure runout on all main journals. Rotate the crankshaft two complete revolutions. The difference between measurements on each journal must not be more than the service limit.

   **Crankshaft Total Runout**
   **Standard (New): 0.02 mm (0.0008 in.) max.**
   **Service Limit: 0.04 mm (0.0016 in.)**

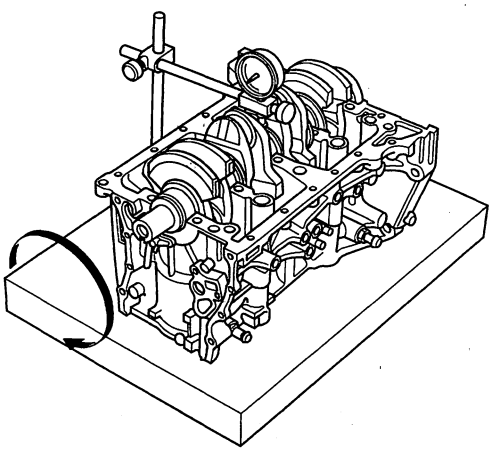

Protected by AR



## Block and Piston Inspection

1. Remove the crankshaft and pistons (see page 7-13).

2. Check the piston for distortion or cracks.

3. Measure the piston diameter at a point 10 mm (0.4 in.) from the bottom of the skirt. There are two standard-size pistons (/ (slash) and B). The letter is stamped on the top of the piston. Letters are also stamped on the block as cylinder bore sizes.

   **Piston Diameter**
   **Standard (New):**
   **/ (slash): 85.980—85.990 mm (3.3850—3.3854 in.)**
   **B: 85.970—85.980 mm (3.3846—3.3850 in.)**
   **Service Limit:**
   **/ (slash): 85.930 mm (3.3831 in.)**
   **B: 85.920 mm (3.3827 in.)**

   **Oversize Piston Diameter**
   **0.25: 86.230—86.240 mm (3.3949—3.3953 in.)**

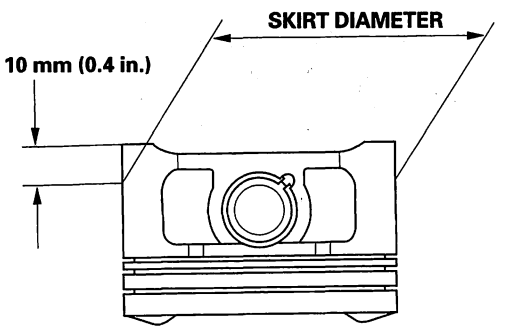


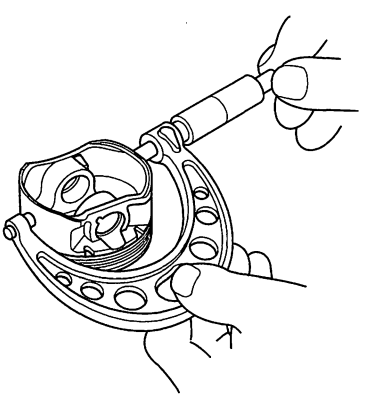

4. Measure the wear and taper in direction X and Y at three levels in each cylinder as shown. If the measurements in any cylinder are beyond the Oversize Bore Service Limit, replace the block. If the block is being rebored, refer to step 7 after reboring.

   **Cylinder Bore Size**
   **Standard (New):**
   **A or I: 86.010—86.020 mm (3.3862—3.3866 in.)**
   **B or II: 86.000—86.010 mm (3.3858—3.3862 in.)**
   **Service Limit: 86.070 mm (3.3886 in.)**

   **Oversize**
   **0.25: 86.250—86.260 mm (3.3957—3.3961 in.)**

   **Reboring Limit: 0.25 mm (0.01 in.) max.**

   **Bore Taper**
   **Limit: (Difference between first and third measurement) 0.05 mm (0.002 in.)**

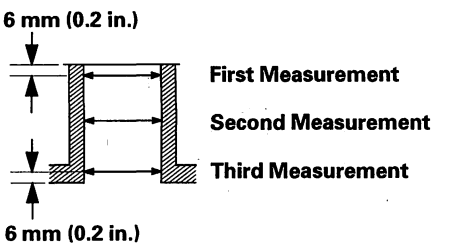


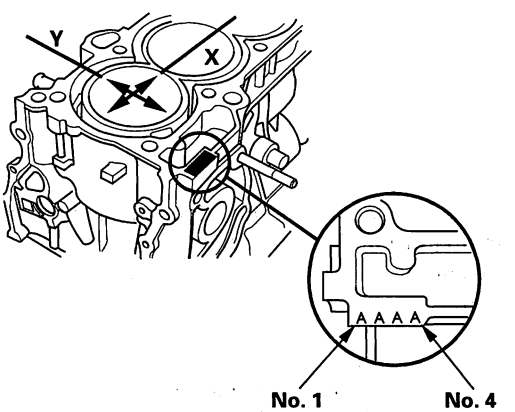




BACK

Protected by AR

5. Scored or scratched cylinder bores must be honed.

6. Check the top of the block for warpage. Measure along the edges, and across the center as shown.

**Engine Block Warpage**
**Standard (New): 0.07 mm (0.003 in.) max.**
**Service Limit: 0.10 mm (0.004 in.)**

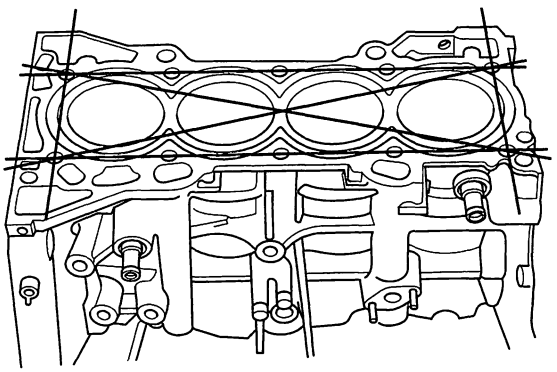

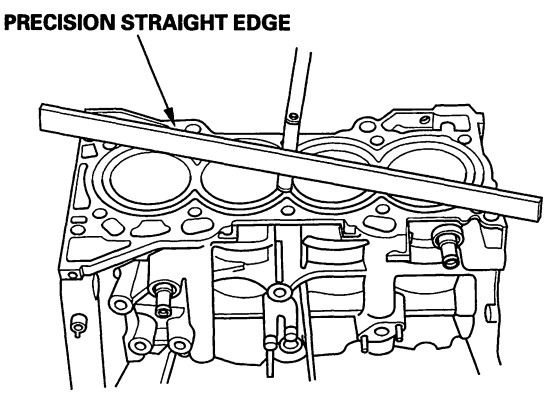


7. Calculate the difference between the cylinder bore diameter and the piston diameter. If the clearance is near or exceeds the service limit, inspect the piston and cyrinder bore for excessive wear.

**Piston-to-Cylinder Bore Clearance**
**Standard (New): 0.020—0.040 mm (0.0008—0.0016 in.)**
**Service Limit: 0.05 mm (0.002 in.)**

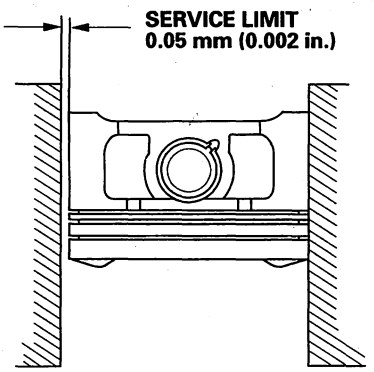

Protected by AR



## Cylinder Bore Honing

Only a scored or scratched cylinder bore must be honed.

1. Measure the cylinder bores (see page 7-16). If the block is to be reused, hone the cylinders, and remeasure the bores.

2. Hone the cylinder bores with honing oil and a fine (400 grit) stone in a 60 degree cross-hatch pattern (A). Use only a rigid hone with 400 grit or finer stone such as Sunnen, Ammco, or equivalent. Do not use stones that are worn or broken.

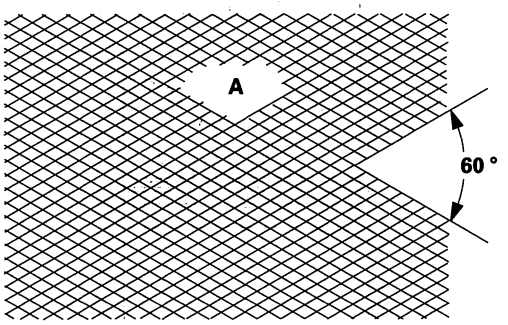


3. When honing is complete, thoroughly clean the engine block of all metal particles. Wash the cylinder bores with hot soapy water, then dry and oil them immediately to prevent rusting. Never use solvent, it will only redistribute the grit on the cylinder walls.

4. If scoring or scratches are still present in the cylinder bores after honing the engine block to the service limit, rebore the engine block. Some light vertical scoring and scratching is acceptable if it is not deep enough to catch your fingernail, and does not run the full length of the bore.



BACK

Protected by AR

# Piston, Pin, and Connecting Rod Replacement

## Disassembly

1. Remove the piston from the engine block (see page 7-13).

2. Apply new engine oil to the piston pin snap rings (A), and turn them in the ring grooves until the end gaps are lined up with the cutouts in the piston pin bores (B).

   NOTE: Take care not to damage the ring grooves.

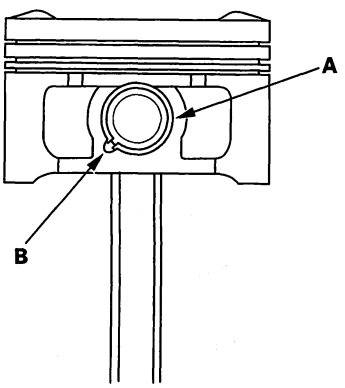


3. Remove both snap rings. Start at the cutout in the piston pin bore. Remove the snap rings carefully so they do not go flying or get lost. Wear eye protection.

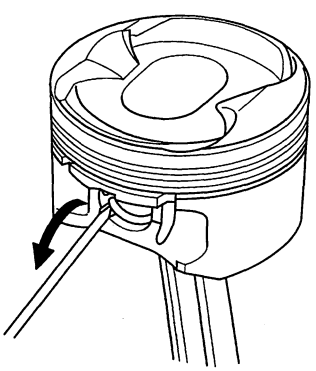

4. Heat the piston and connecting rod assembly to about 158 °F (70 °C), then remove the piston pin.

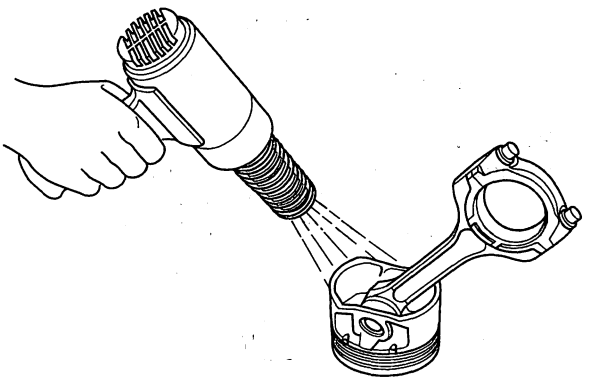

(cont'd)

Protected by AR



## Piston, Pin, and Connecting Rod Replacement (cont'd)

### Inspection

NOTE: Inspect the piston, piston pin, and connecting rod when they are at room temperature.

1. Measure the diameter of the piston pin.

**Piston Pin Diameter**
**Standard (New): 21.962—21.965 mm (0.8646—0.8648 in.)**
**Service Limit: 21.953 mm (0.8643 in.)**

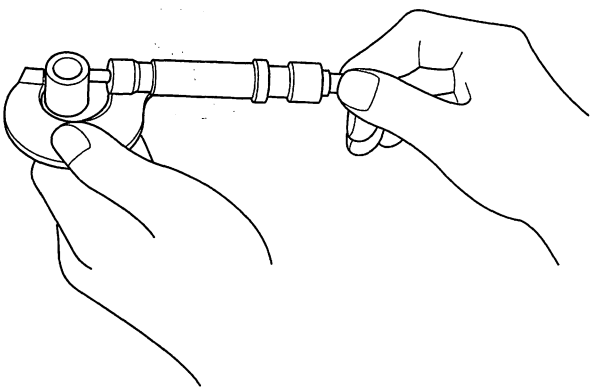

2. Zero the dial indicator to the piston pin diameter.

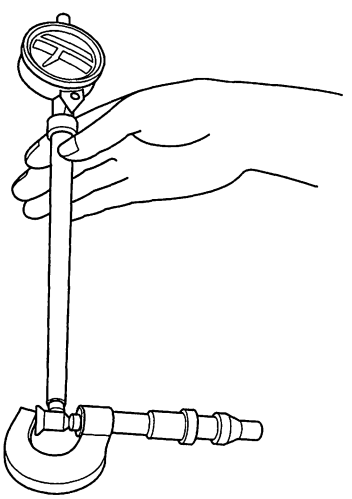

3. Check the difference between the piston pin diameter and piston pin hole diameter in the piston.

**Piston Pin-to-Piston Clearance**
**Standard (New): —0.005 to +0.002 mm (—0.00020 to +0.00008 in.)**
**Service Limit: 0.005 mm (0.0002 in.)**

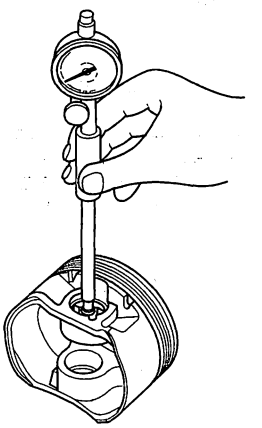

4. Measure the piston pin-to-connecting rod clearance.

**Piston Pin-to-Connecting Rod Clearance**
**Standard (New): 0.005—0.014 mm (0.0002—0.0006 in.)**
**Service Limit: 0.02 mm (0.0008 in.)**

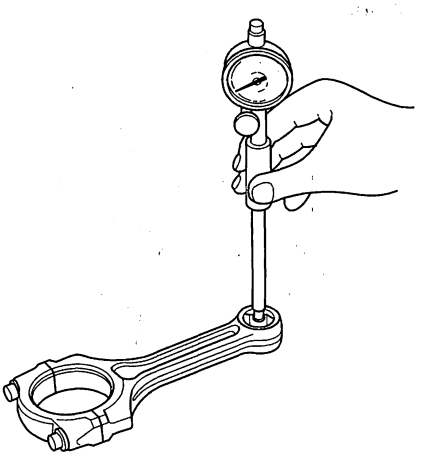



BACK

Protected by AR

## Reassembly

1. Install a piston pin snap ring (A).

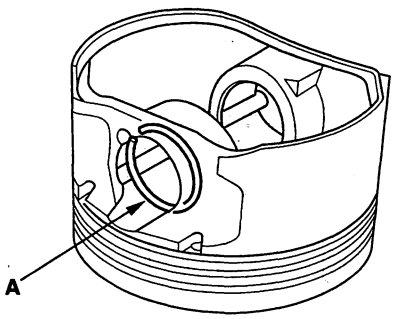


2. Coat the piston pin bore in the piston, the bore in the connecting rod, and the piston pin with new engine oil.

3. Heat the piston to about 158 °F (70 °C).

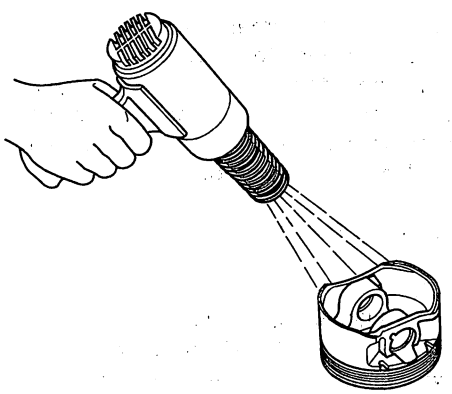

4. Assemble the piston (A) and connecting rod (B) with the arrow (C) and the embossed mark (D) on the same side. Install the piston pin (E).

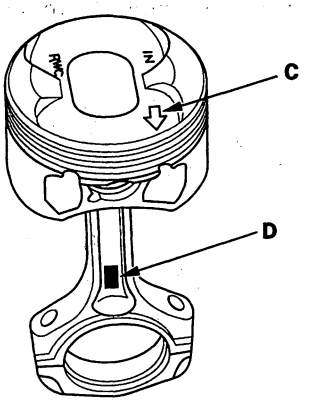


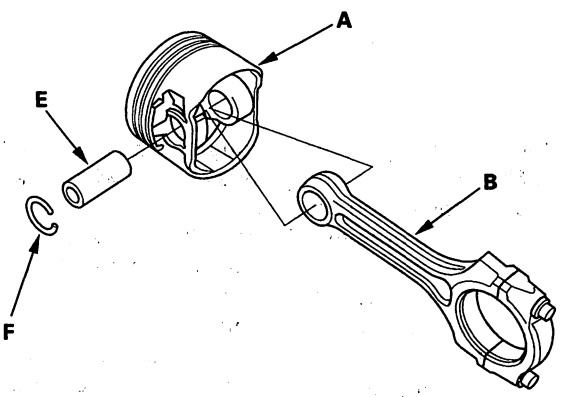


5. Install the remaining snap ring (F).

6. Turn the snap rings in the ring grooves until the end gaps are positioned at the bottom of the piston.

Protected by AR



## Piston Ring Replacement

1. Remove the piston from the engine block (see page 7-13).

2. Using a ring expander (A), remove the old piston rings (B).

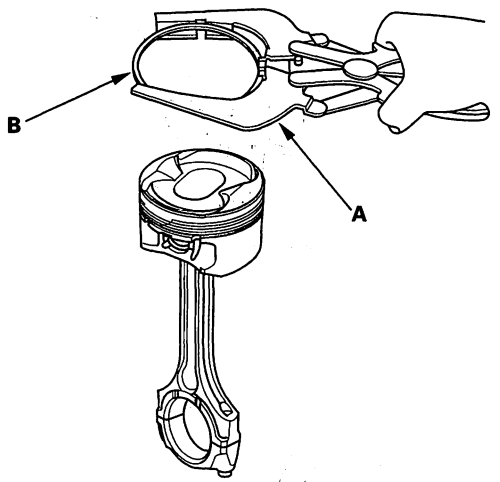


3. Clean all ring grooves thoroughly with a squared-off broken ring or ring groove cleaner with a blade that fits the piston grooves.
   The top ring groove is 1.5 mm (0.06 in.) wide. The 2nd ring groove is 1.2 mm (0.05 in.) wide. The oil ring groove is 2.0 mm (0.08 in.) wide.
   File down a blade if necessary.
   Do not use a wire brush to clean the ring grooves, or cut the ring grooves deeper with the cleaning tools.

   NOTE: If the piston is to be separated from the connecting rod, do not install new rings yet.

4. Using a piston that has its rings removed, push a new ring (A) into the cylinder bore 15—20 mm (0.6—0.8 in.) from the bottom.

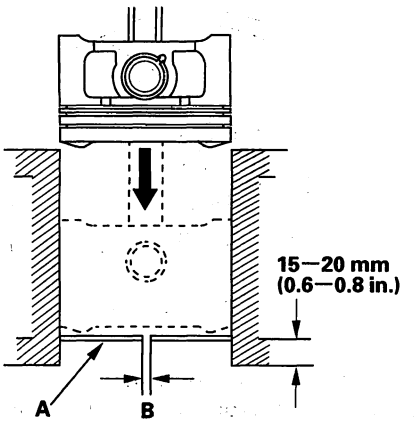


5. Measure the piston ring end-gap (B) with a feeler gauge:

   - If the gap is too small, check to see if you have the proper rings for your engine.
   - If the gap is too large, recheck the cylinder bore diameter against the wear limits (see page 7-16). If the bore is beyond the service limit, the engine block must be rebored.

**Piston Ring End-Gap**

**Top Ring:**
**Standard (New): 0.20—0.30 mm (0.008—0.012 in.)**
**Service Limit: 0.60 mm (0.024 in.)**

**Second Ring:**
**Standard (New): 0.40—0.50 mm (0.016—0.020 in.)**
**Service Limit: 0.75 mm (0.030 in.)**

**Oil Ring:**
**Standard (New): 0.10—0.30 mm (0.004—0.012 in.)**
**Service Limit: 0.80 mm (0.031 in.)**



BACK

Protected by AR

6. Install the top ring and the second ring as shown. The top ring (A) has a 1N mark and the second ring (B) has a 2N mark. The manufacturing marks (C) must be facing upward.

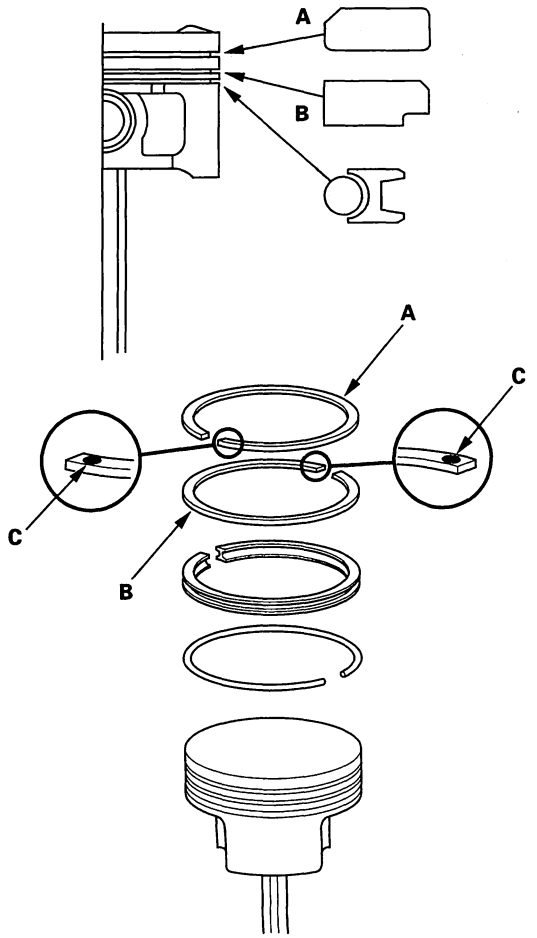


**Piston Ring Dimensions:**

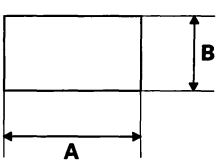


**Top Ring (Standard):**
**A: 3.1 mm (0.12 in.)**
**B: 1.5 mm (0.06 in.)**

**Second Ring (Standard):**
**A: 3.4 mm (0.13 in.)**
**B: 1.2 mm (0.05 in.)**

7. Rotate the rings in their grooves to make sure they do not bind.

8. Position the ring end gaps as shown:

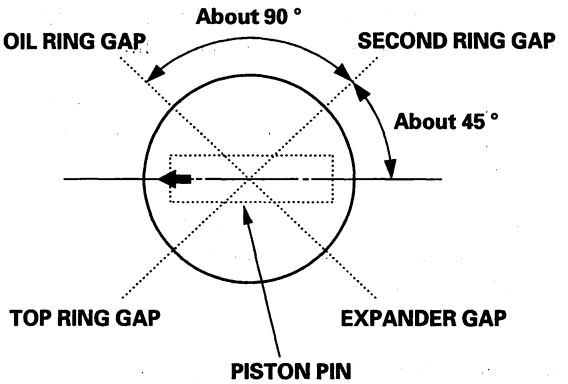


9. After installing a new set of rings, measure the ring-to-groove clearances.

**Top Ring Clearance**
**Standard (New): 0.045—0.090 mm (0.0018—0.0035 in.)**
**Service Limit: 0.13 mm (0.005 in.)**

**Second Ring Clearance**
**Standard (New): 0.040—0.065 mm (0.0016—0.0026 in.)**
**Service Limit: 0.13 mm (0.005 in.)**

**Oil Ring Clearance**
**Standard (New): 0.020—0.050 mm (0.0008—0.0020 in.)**
**Service Limit: 0.08 mm (0.003 in.)**

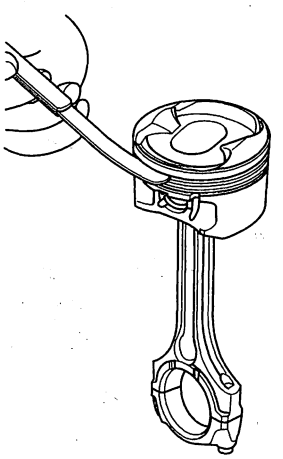

Protected by AR



## Piston Installation

### If the Crankshaft is Already Installed

1. Set the crankshaft to bottom dead center (BDC) for each cylinder as its piston is installed.

2. Remove the connecting rod caps, then install the ring compressor. Check that the bearing is securely in place.

3. Apply new engine oil to the piston, inside of the ring compressor, and the cylinder bore, then attach the ring compressor to the piston/connecting rod assembly.

4. Position the mark (A) to face the cam chain side of the engine.

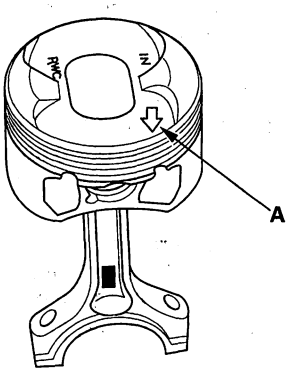


5. Position the piston in the cylinder, and tap it in using the wooden handle of a hammer (A). Push down on the ring compressor (B) to prevent the rings from expanding before entering the cylinder bore.

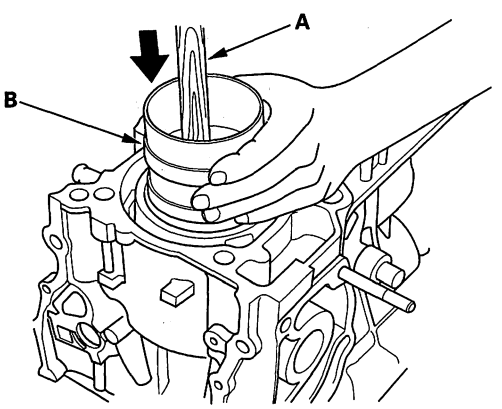


6. Stop after the ring compressor pops free, and check the connecting rod-to-crank journal alignment before pushing the piston into place.

7. Check the connecting rod bearing clearance with plastigage (see page 7-8).

8. Inspect the connecting rod bolts (see page 7-25).

9. Install the rod caps with bearings. Torque the bolts to 29 N·m (3.0 kgf·m, 22 lbf·ft).

10. Tighten the connecting rod bolts an additional 90 °.

    NOTE: Remove the connecting rod bolt if you tightened it beyond the specified angle, and go back to step 8 of the procedure. Do not loosen it back to the specified angle.

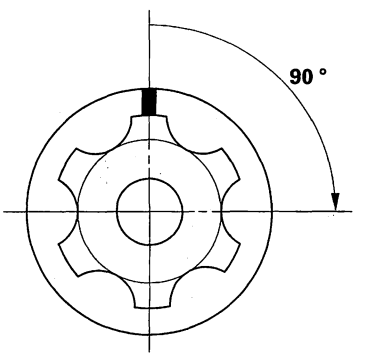




BACK

Protected by AR

### If the Crankshaft is Not Installed

1. Remove the connecting rod caps, then install the ring compressor, and check that the bearing is securely in place.

2. Apply new engine oil to the piston, inside of the ring compressor, and the cylinder bore, then attach the ring compressor to the piston/connecting rod assembly.

3. Position the mark (A) to face the cam chain side of the engine.

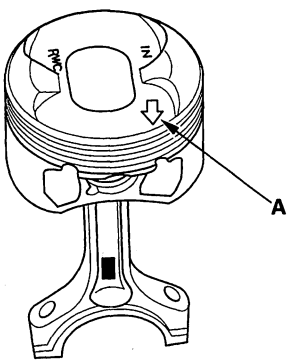


4. Position the piston in the cylinder, and tap it in using the wooden handle of a hammer (A). Push down on the ring compressor (B) to prevent the rings from expanding before entering the cylinder bore.

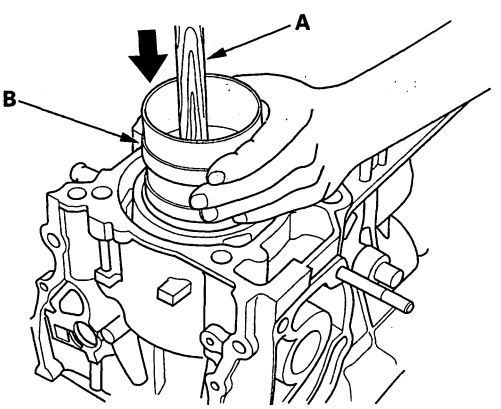


5. Position all pistons at top dead center (TDC).

## Connecting Rod Bolt Inspection

1. Measure the diameter of each connecting rod bolt at point A and point B.

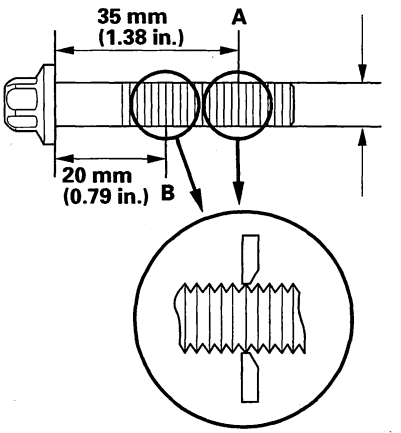


2. Calculate the difference in diameter between point A and point B.

   **Point A—Point B = Difference in Diameter**

   **Difference in Diameter**
   **Specification: 0—0.1 mm (0—0.004 in.)**

3. If the difference in diameter is out of specification, replace the connecting rod bolt.

Protected by AR



## Crankshaft Installation

**Special Tools Required**
- Driver 07749-0010000
- Oil seal driver attachment, 96 mm 07ZAD-PNAA100

1. Check the connecting rod bearing clearance with plastigage (see page 7-8).

2. Check the main bearing clearance with plastigage (see page 7-6).

3. Install the bearing halves in the engine block and connecting rods.

4. Apply a coat of new engine oil to the main bearings and rod bearings.

5. Hold the crankshaft so that rod journal No. 2 and rod journal No. 3 are straight up, and lower the crankshaft into the block.

6. Apply new engine oil to the thrust washer surfaces. Install the thrust washers (A) in the No. 4 journal of the engine block.

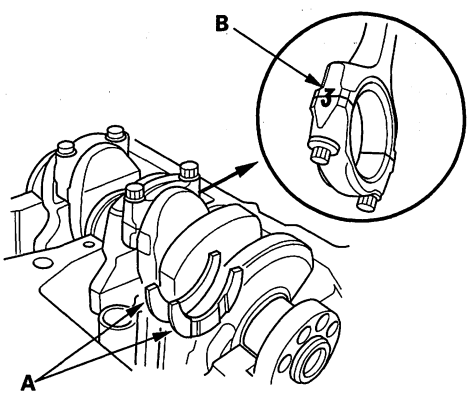


7. Inspect the connecting rod bolts (see page 7-25).

8. Apply engine oil to the threads of the connecting rod bolts.

9. Seat the rod journals into connecting rod No. 1 and connecting rod No. 4. Line up the mark (B) on the connecting rod and cap, then install the caps and bolts finger-tight.

10. Seat the journals into connecting rod No. 2 and connecting rod No. 3. Line up the mark on the connecting rod and cap, then install the caps and bolts finger-tight.

11. Tighten the connecting rod bolts to 29 N·m (3.0 kgf·m, 22 lbf·ft).

12. Tighten the connecting rod bolts an additional 90 °.

    NOTE: Remove the connecting rod bolt if you tightened it beyond the specified angle, and go back to step 7 of the procedure. Do not loosen it back to the specified angle.

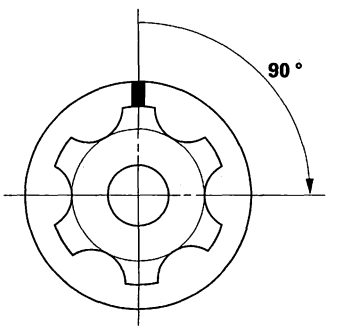


13. Remove all of the old liquid gasket from the lower block mating surfaces, bolts, and bolt holes.

14. Clean, and dry the lower block mating surfaces.

15. Apply liquid gasket, P/N 08717-0004, 08718-0001, 08718-0003, or 08718-0009, evenly to the engine block mating surface of the lower block. Install the component within 5 minutes of applying the liquid gasket.

    NOTE:
    - If you apply liquid gasket P/N 08718-0012, the component must be installed within 4 minutes.
    - If too much time has passed after applying the liquid gasket, remove the old liquid gasket and residue, then reapply new liquid gasket.

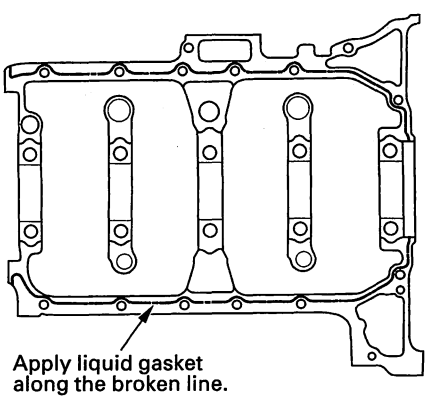




BACK

Protected by AR

16. Put the lower block on the engine block.

17. Apply new engine oil to the threads of the bearing cap bolts.

18. Tighten the bearing cap bolts, in sequence, to 29 N·m (3.0 kgf·m, 22 lbf·ft).

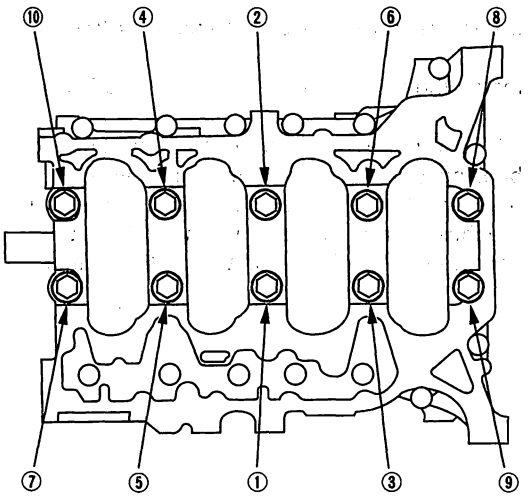


19. Tighten the bearing cap bolts an additional 67 °.

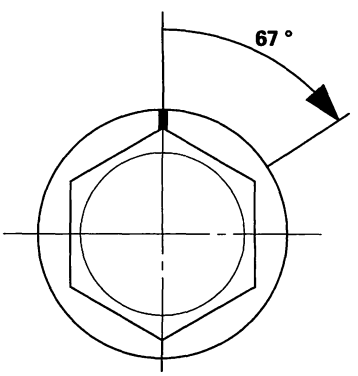


20. Tighten the 8 mm bolts, in sequence, to 22 N·m (2.2 kgf·m, 16 lbf·ft).

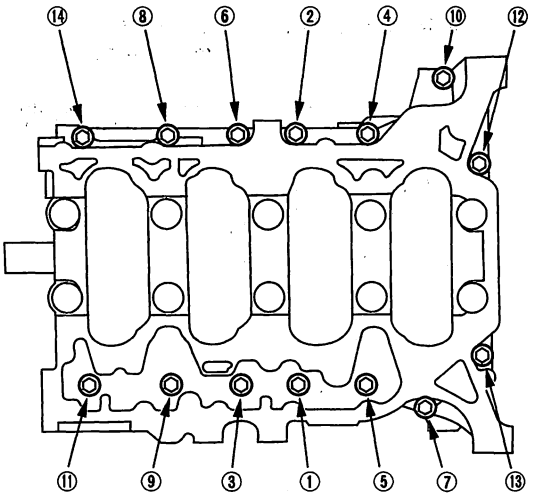


21. Use the driver and attachment to drive a new oil seal squarely into the block to the specified installed height.

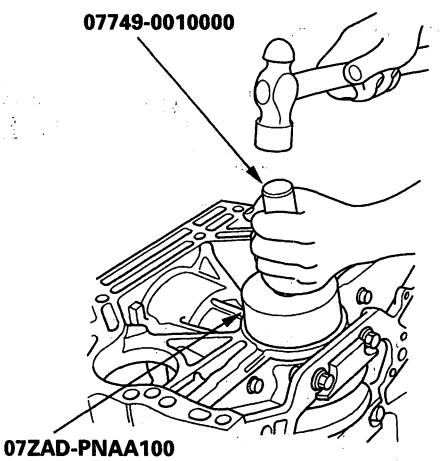


(cont'd)

Protected by AR



## Crankshaft Installation (cont'd)

22. Measure the distance between the engine block (A) and oil seal (B).

    **Oil Seal Installed Height:** **0.2—1.2 mm (0.001—0.047 in.)**

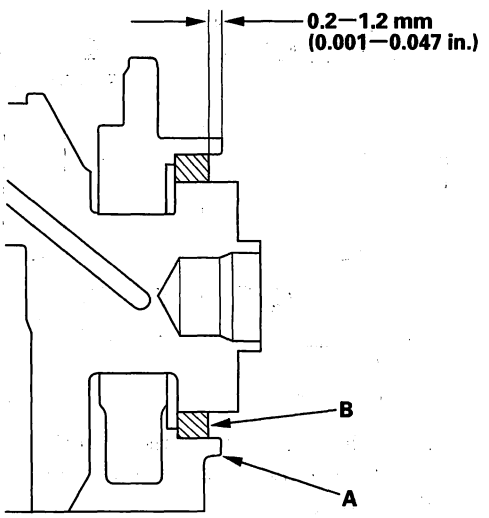


23. Install the baffle plate.

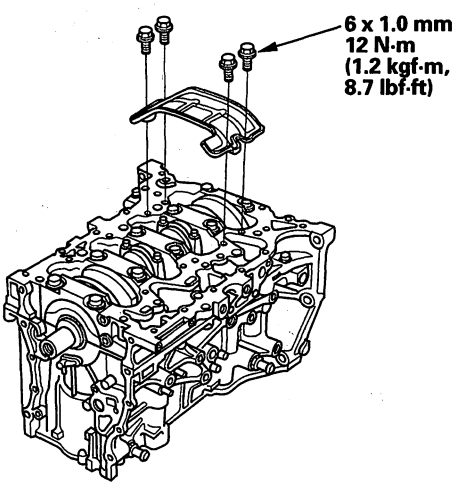


24. Install the oil pump (see page 8-19).

25. Install the oil pan (see page 7-29).

26. Install the cylinder head (see page 6-50).

27. Install the drive plate (see page 14-270).

28. Install the transmission (see page 14-258).

29. Install the engine assembly (see page 5-11).

    NOTE: Whenever any crankshaft or connecting rod bearing is replaced, it is necessary after reassembly to run the engine at idle speed until it reaches normal operating temperature, then continue to running it for about 15 minutes.



BACK

Protected by AR

## Oil Pan Installation

1. Remove all of the old liquid gasket from the oil pan mating surfaces, bolts, and bolt holes.

2. Clean, and dry the oil pan mating surfaces.

3. Apply liquid gasket, P/N 08717-0004, 08718-0001, 08718-0003, or 08718-0009, evenly to the engine block mating surface of the oil pan and to the inside edge of the bolt holes. Install the component within 5 minutes of applying the liquid gasket.

   NOTE:
   - If you apply liquid gasket P/N 08718-0012, the component must be install within 4 minutes.
   - If too much time has passed after applying the liquid gasket, remove the old liquid gasket and residue, then reapply new liquid gasket.

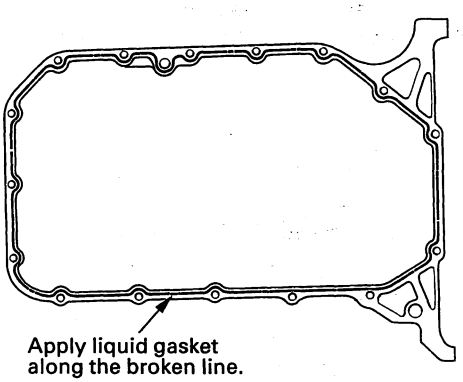


4. Install the oil pan.

5. Tighten the bolts in two or three steps. In the final step, tighten all bolts, in sequence, to 12 N·m (1.2 kgf·m, 8.7 lbf·ft). Wipe off the excess liquid gasket on the each side of crankshaft pulley and drive plate.

   NOTE:
   - Wait at least 30 minutes before filling the engine with oil.
   - Do not run the engine for at least 3 hours after installing the oil pan.

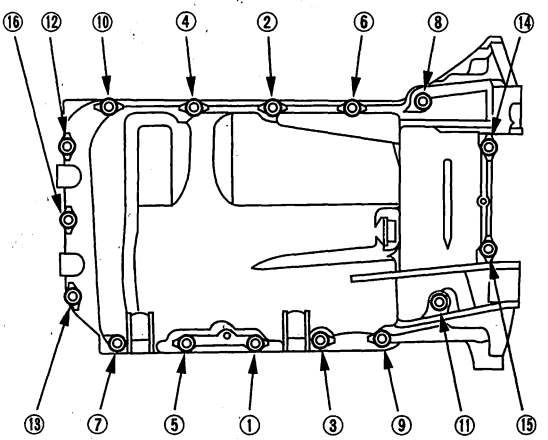


6. Install the transmission mounting bolts (A) and torque converter cover (B).

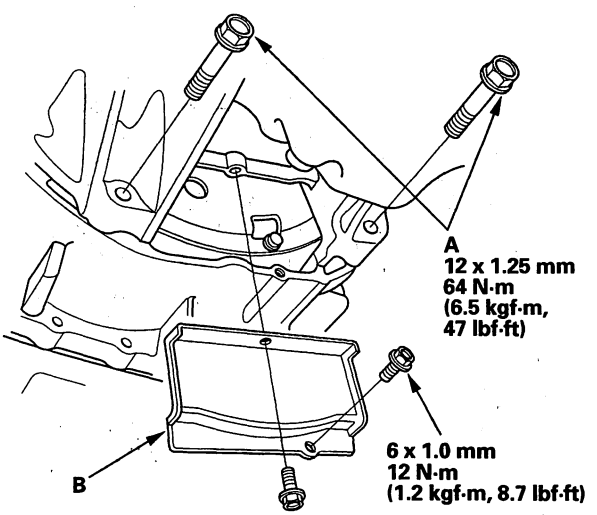


(cont'd)

Protected by AR



## Oil Pan Installation (cont'd)

7. Install the lower torque rod bracket.

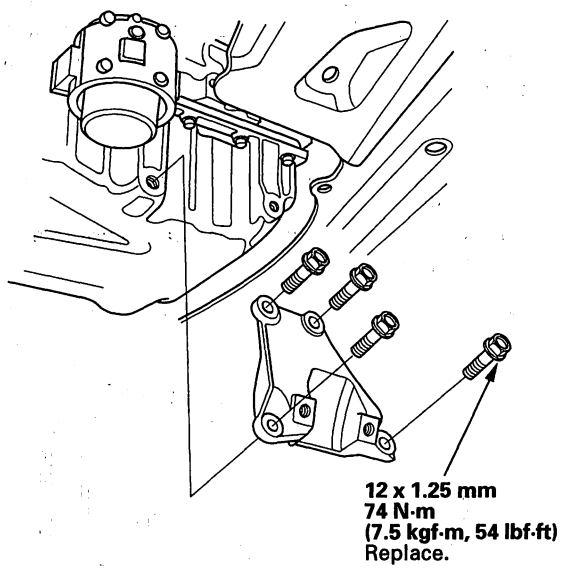


8. If the engine is still in the vehicle, do the following steps.

9. Tighten the 14 x 1.5 mm bolts (A), then tighten the 12 x 1.25 mm bolts (B) and new 14 x 1.5 mm bolts (C).

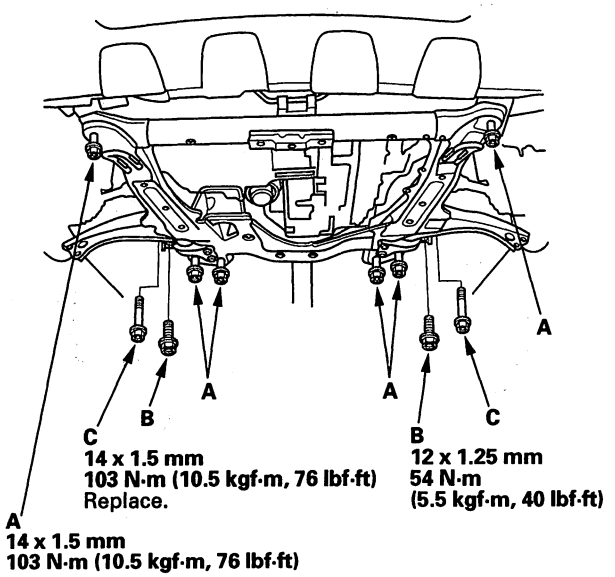


10. Lower the vehicle on the lift.

11. Loosen the upper torque rod mounting bolt (see step 1 on page 5-24).

12. Raise the vehicle on the lift to full height.

13. Tighten the lower torque rod mounting bolts (see step 18 on page 5-14).

14. Lower the vehicle on the lift.

15. Tighten the upper torque rod mounting bolt (see step 6 on page 5-25).

16. Raise the vehicle on the lift to full height.

17. Using the new gasket (A), then tighten the two bolts at the three way catalytic converter (TWC) front joint.

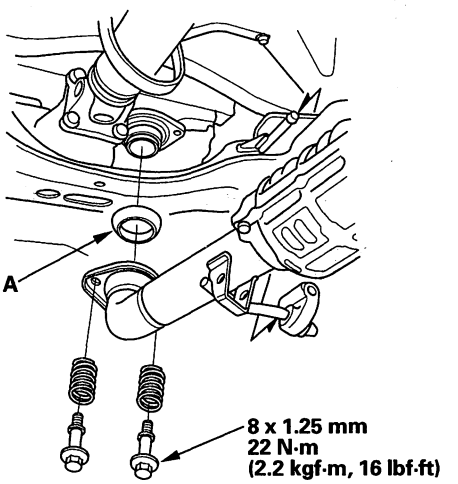


18. Install the bolts securing the steering gearbox mounting brackets (see step 23 on page 5-15).

19. Install the power steering (P/S) fluid line bracket, and secure the hose with the hose clamps (see step 24 on page 5-15).

20. Install the splash shield (see step 30 on page 5-16).

21. Install the front wheels.

22. Refill the engine with engine oil (see step 4 on page 8-9).



BACK

Protected by AR

# Transmission End Crankshaft Oil Seal Installation - In Car

**Special Tools Required**
- Driver 07749-0010000
- Oil seal driver attachment, 96 mm 07ZAD-PNAA100

1. Remove the transmission (see page 14-247).
2. Remove the drive plate (see page 14-270).
3. Clean, and dry the crankshaft oil seal housing.
4. Use the driver and attachment to drive a new oil seal squarely into the block to the specified installed height.

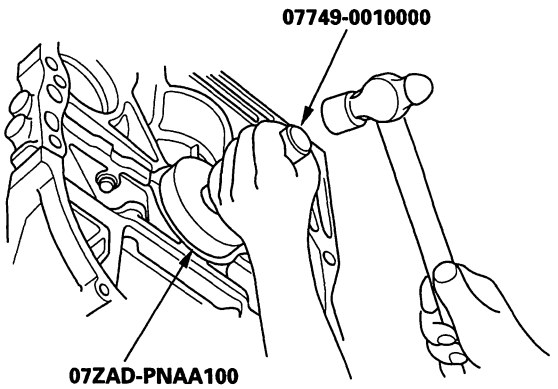


5. Measure the distance between the engine block (A) and oil seal (B).

**Oil Seal Installed Height:** **0.2—1.2 mm (0.001—0.047 in.)**

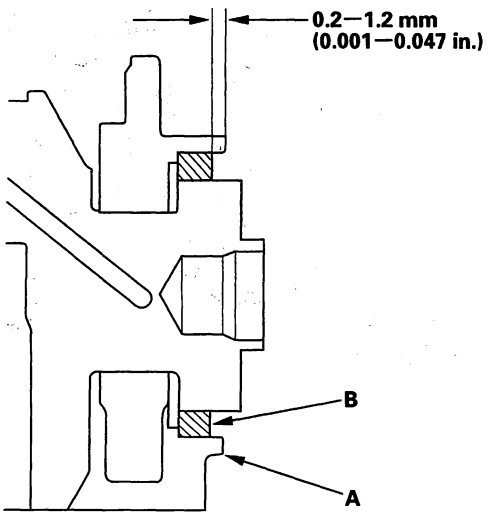


6. Install the drive plate (see page 14-270).
7. Install the transmission (see page 14-258).

Protected by AR



## Sealing Bolt Installation

NOTE: When installing the sealing bolt, always use a new washer.

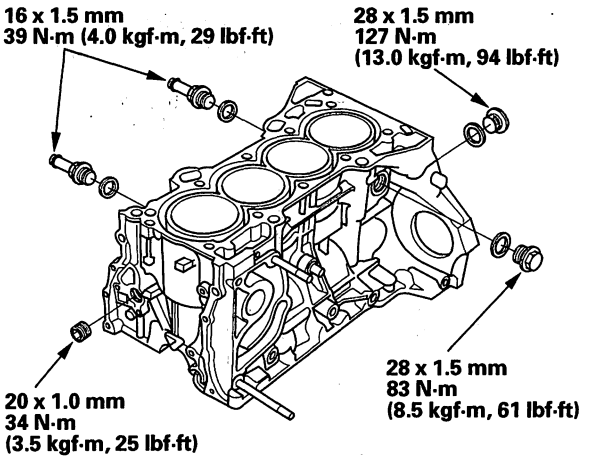




BACK

Protected by AR

# Engine Mechanical

## Engine Lubrication


Special Tools ..... 8-2
Component Location Index ..... 8-3
Symptom Troubleshooting Index ..... 8-4
Low Oil Pressure Indicator Circuit Diagram ..... 8-5
Low Oil Pressure Indicator Circuit Troubleshooting (Open) ..... 8-6
Low Oil Pressure Indicator Circuit Troubleshooting (Short) ..... 8-7
Oil Pressure Switch Test ..... 8-8
Oil Pressure Switch Replacement ..... 8-8
Oil Pressure Test ..... 8-9
Engine Oil Replacement ..... 8-9
Engine Oil Filter Replacement ..... 8-10
Oil Filter Base Replacement ..... 8-11
Oil Jet Replacement ..... 8-12
Oil Jet Inspection ..... 8-12
Oil Pump Overhaul ..... 8-13
Oil Pump Chain Replacement ..... 8-21


BACK

Protected by AR



## Special Tools

| Ref. No. | Tool Number | Description | Qty |
|---|---|---|---|
| ① | 07AAA-PLLA100 | Oil Filter Wrench | 1 |
| ② | 07AAK-STKA120 | RDX Engine Support Mount Pads | 2 |

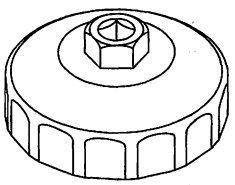

①

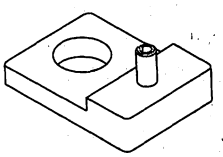

②



BACK

Protected by AR

## Component Location Index

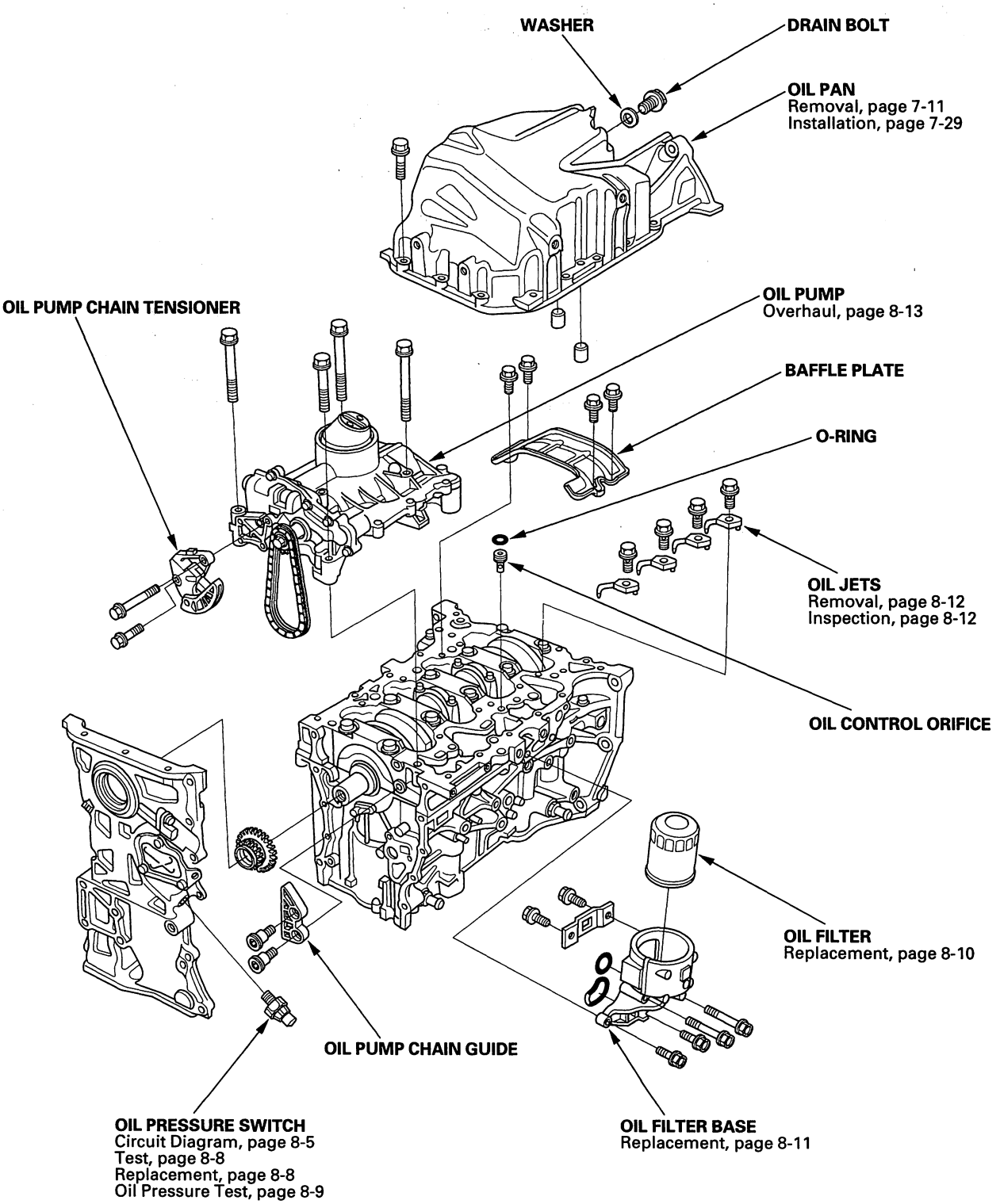

Protected by AR



## Symptom Troubleshooting Index

| Symptom | Diagnostic procedure | Also check for |
|---|---|---|
| Excessive engine oil consumption | 1. Check to see it the engine oil filler cap, oil drain bolt, or oil filter is loose.<br>2. Check for oil leaks.<br>3. Check for worn valve guide(s) (see page 6-43) or worn valve stem seal(s) (see page 6-43).<br>4. Check for damaged or worn piston ring(s) (see page 7-22).<br>5. Check for damaged or worn engine internal parts (cylinder wall, pistons, etc.) (see page 7-16). | |
| Low oil pressure indicator does not come on with the ignition switch ON (II) | 1. Do the low oil pressure indicator circuit troubleshooting (Open) (see page 8-6).<br>2. Test the oil pressure switch (see page 8-8). | An open in the wire between the powertrain control module (PCM) and the oil pressure switch |
| Low oil pressure indicator stays on | 1. Check the engine oil level.<br>2. Do the low oil pressure indicator circuit troubleshooting (Short) (see page 8-7).<br>3. Test the oil pressure switch (see page 8-8).<br>4. Check the engine oil pressure (see page 8-9).<br>5. Check the oil filter for clogging.<br>6. Check the oil screen for clogging.<br>7. Check the relief valve (see page 8-13).<br>8. Test the oil pump (see page 8-15). | A wire shorted to ground between the powertrain control module (PCM) and the oil pressure switch |



BACK

Protected by AR

## Low Oil Pressure Indicator Circuit Diagram

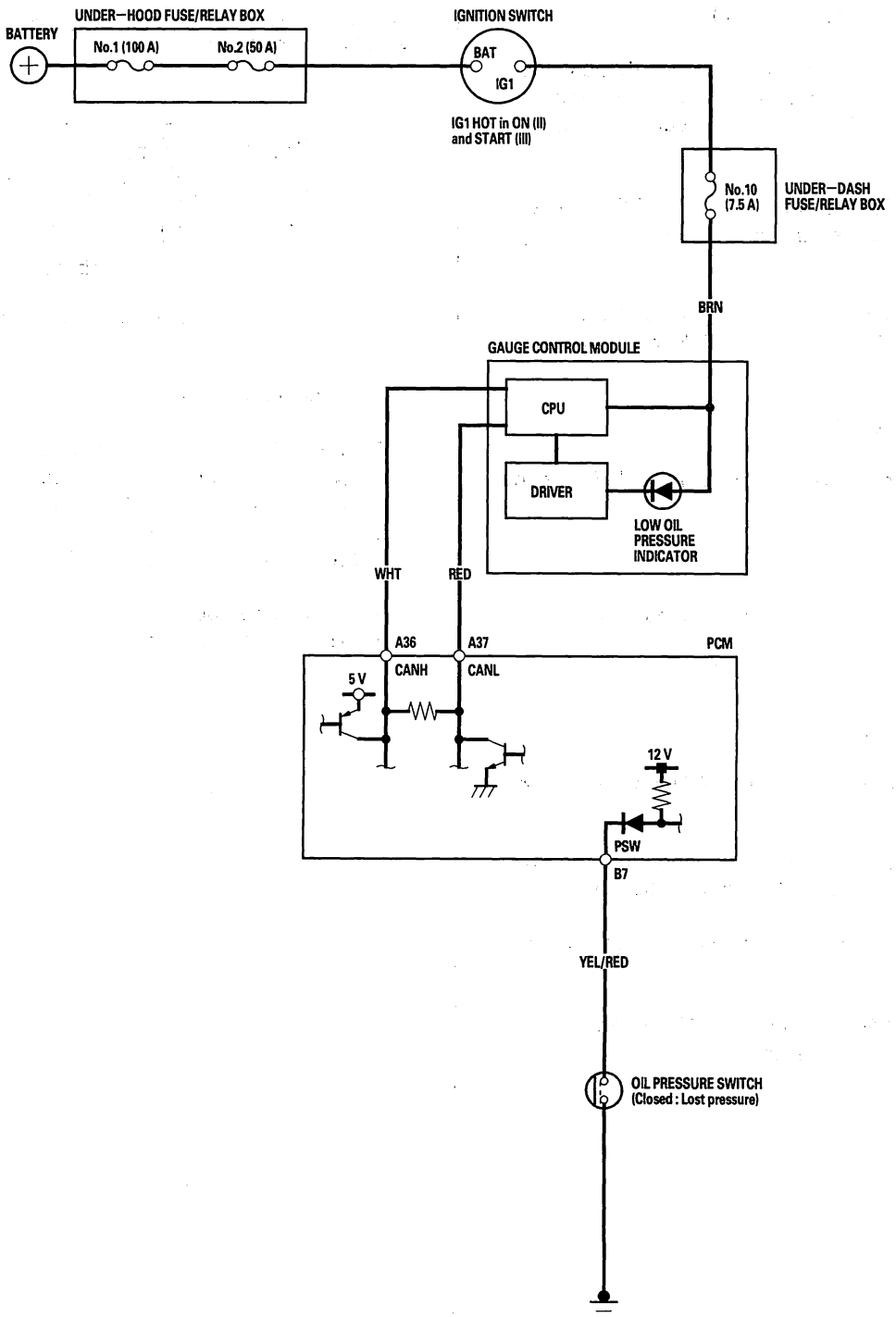

Protected by AR



## Low Oil Pressure Indicator Circuit Troubleshooting (Open)

1. Connect the Honda Diagnostic System (HDS) to the data link connector (DLC) (see step 2 on page 11-3).

2. Turn the ignition switch ON (II).

3. Make sure the HDS communicates with the vehicle and the powertrain control module (PCM). If it doesn't, troubleshoot the DLC circuit (see page 11-229).

4. Check for DTCs (see page 11-3). If a DTC is present, diagnose, and repair the cause before continuing with this test.

5. Turn the ignition switch ON (II), select PGM-FI, and check the OIL PRESSURE SWITCH in the DATA LIST with the HDS.

   *Is "ON" indicated?*

   **YES**—Replace the gauge control module (see page 22-284). ■

   **NO**—Go to step 6.

6. Check the oil pressure switch (see page 8-8).

   *Is the oil pressure switch OK?*

   **YES**—Go to step 7.

   **NO**—Replace the oil pressure switch (see page 8-8). ■

7. Turn the ignition switch ON (II), and jump the SCS line with the HDS, then turn the ignition switch OFF.

   NOTE: This step must be done to protect the PCM from damage.

8. Disconnect PCM connector B (44P) and the oil pressure switch connector.

9. Check for continuity between PCM connector terminal B7 and the oil pressure switch connector.

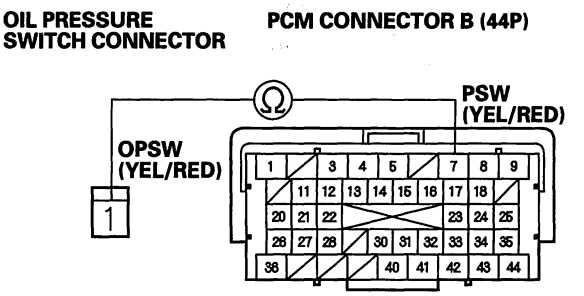


Terminal side of female terminals

*Is there continuity?*

**YES**—Update the PCM if it does not have the latest software (see page 11-7), or substitute a known-good PCM (see page 11-8), then recheck. If the symptom/indication goes away with a known-good PCM, replace the original PCM (see page 11-252). ■

**NO**—Repair an open in the wire between the oil pressure switch and the PCM. ■



BACK

Protected by AR

## Low Oil Pressure Indicator Circuit Troubleshooting (Short)

1. Connect the Honda Diagnostic System (HDS) to the data link connector (DLC) (see step 2 on page 11-3).

2. Turn the ignition switch ON (II).

3. Make sure the HDS communicates with the vehicle and the powertrain control module (PCM). If it doesn't, troubleshoot the DLC circuit (see page 11-229).

4. Check for DTCs (see page 11-3). If a DTC is present, diagnose, and repair the cause before continuing with this test.

5. Start the engine, select PGM-FI, and check the OIL PRESSURE SWITCH in the DATA LIST with the HDS.

   *Is "OFF" indicated?*

   **YES**—Replace the gauge control module (see page 22-284). ■

   **NO**—Go to step 6.

6. Turn the ignition switch OFF.

7. Disconnect the oil pressure switch connector.

8. Start the engine, and check the OIL PRESSURE SWITCH in the DATA LIST with the HDS.

   *Is "OFF" indicated?*

   **YES**—Go to step 9.

   **NO**—Go to step 10.

9. Check the oil pressure switch (see page 8-8).

   *Is the oil pressure switch OK?*

   **YES**—Do the oil pressure test (see page 8-9).

   **NO**—Replace the oil pressure switch (see page 8-8). ■

10. Turn the ignition switch ON (II), and jump the SCS line with the HDS, then turn the ignition switch OFF.

    NOTE: This step must be done to protect the PCM from damage.

11. Disconnect PCM connector B (44P) and the oil pressure switch connector.

12. Check for continuity between the oil pressure switch connector and body ground.

**OIL PRESSURE SWITCH CONNECTOR**

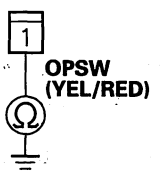


Terminal side of female terminal

*Is there continuity?*

**YES**—Repair a short in the wire between the oil pressure switch and the PCM. ■

**NO**—Update the PCM if it does not have the latest software (see page 11-7), or substitute a known-good PCM (see page 11-8), then recheck. If the symptom/indication goes away with a known-good PCM, replace the original PCM (see page 11-252). ■

Protected by AR



## Oil Pressure Switch Test

1. Remove the oil pressure switch connector (A) from the engine oil pressure switch (B).

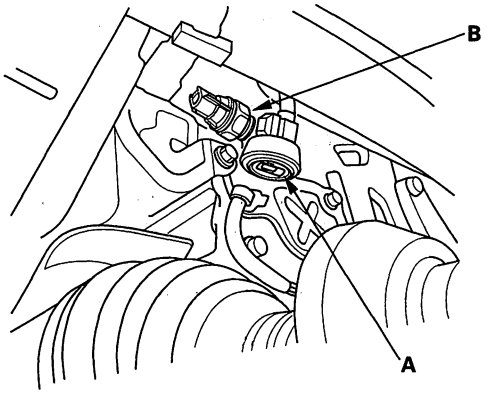


2. Check for continuity between the pressure switch terminal and the engine (ground). There should be continuity with the engine stopped. There should be no continuity with the engine running.

## Oil Pressure Switch Replacement

1. Disconnect the oil pressure switch connector, then remove the oil pressure switch.

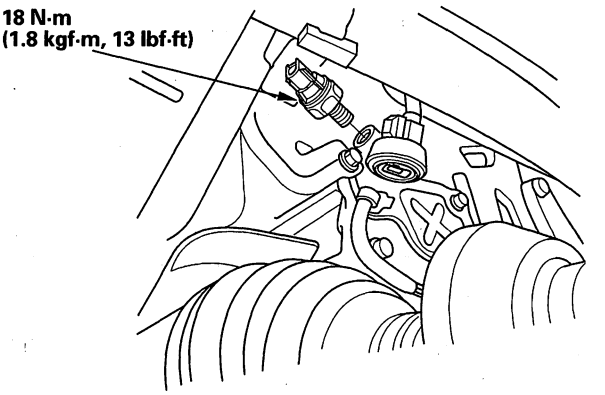


2. Remove any old liquid gasket from the switch and switch mounting hole.

3. Apply a very small amount of liquid gasket to the oil pressure switch threads, then install the oil pressure switch.

   NOTE: Using too much liquid gasket may cause liquid gasket to enter the oil passage or the end of the new oil pressure switch.



BACK

Protected by AR

## Oil Pressure Test

NOTE: If the oil pressure warning light stays on with the engine running, check the engine oil level. If the oil level is correct:

1. Remove the engine oil pressure switch, and install an oil pressure gauge (A).

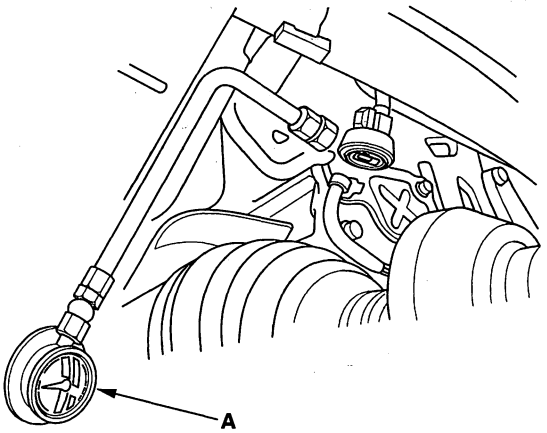


2. Start the engine. Shut it off immediately if the gauge registers no oil pressure. Repair the problem before continuing.

3. Allow the engine to reach operating temperature (fan comes on at least twice). The pressure should be:

   **Engine Oil Temperature: 176 °F (80 °C)**
   **Engine Oil Pressure:**
   **At Idle: 70 kPa (0.7 kgf/cm², 10 psi) min.**
   **At 3,000 rpm: 300 kPa (3.1 kgf/cm², 44 psi) min.**

4. If the oil pressure is out of specifications, inspect these items:

   - Replace the oil filter (see page 8-10).
   - Inspect the oil pressure relief valve (see page 8-13).
   - Check the oil screen for clogging.
   - Check the oil pump (see page 8-15).

## Engine Oil Replacement

1. Warm up the engine.

2. Remove the drain bolt (A), and drain the engine oil.

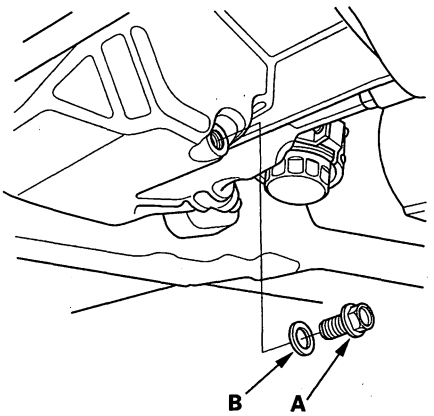


**39 N·m (4.0 kgf·m, 29 lbf·ft)**
Do not overtighten.

3. Reinstall the drain bolt with a new washer (B).

4. Refill the engine with the recommended oil (see page 3-2).

   NOTE: Always use Mobil 1® P/N 5W-30-MB1-000 or an equivalent oil that meets the ACURA HT0-06 standard. Not all synthetic oil will meet this standard.

   **Capacity**
   **At Oil Change: 4.5 L (4.8 US qt)**
   **At Oil Change including Filter: 4.7 L (5.0 US qt)**
   **After Engine Overhaul: 5.8 L (6.1 US qt)**

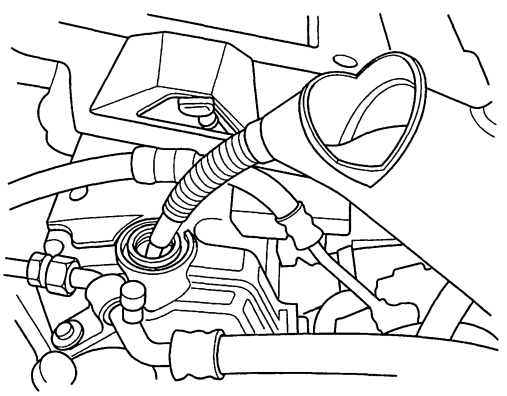

(cont'd)

Protected by AR



## Engine Oil Replacement (cont'd)

5. If the maintenance minder required to replace the engine oil, reset the maintenance minder (see page 3-4) and this procedure is complete. If the maintenance minder did not require to replace the engine oil, go to step 6.

6. Connect the Honda Diagnostic System (HDS) to the data link connector (DLC) (see step 2 on page 11-3).

7. Turn the ignition switch ON (II).

8. Make sure the HDS communicates with the vehicle and the powertrain control module (PCM). If it doesn't, troubleshoot the DLC circuit (see page 11-229).

9. Select the BODY ELECTRICAL with the HDS.

10. Select the ADJUSTMENT in GAUGE MENU with the HDS.

11. Select the RESET in the MAINTENANCE MINDER with the HDS.

12. Select the RESETTING THE ENGINE OIL LIFE with the HDS.

13. Run the engine for more than 3 minutes, then check for oil leaks.

## Engine Oil Filter Replacement

**Special Tools Required**
Oil filter wrench 07AAA-PLLA100

1. Remove the oil filter with the special oil filter wrench.

2. Inspect oil filter sealing surface and be sure all of the rubber seal is removed.

3. Inspect the threads (A) and rubber seal (B) on the new filter. Clean the seat on the filter base, then apply a light coat of new engine oil to the filter rubber seal. Use only filters with a built-in bypass system.

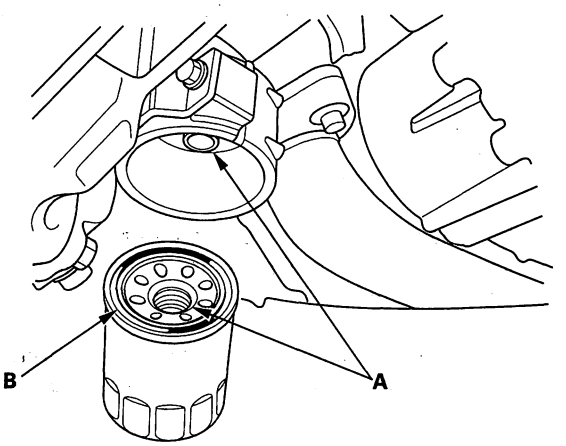




BACK

Protected by AR

4. Install the oil filter by hand.

5. After the rubber seal seats, tighten the oil filter to 12 N·m (1.2 kgf·m, 8.7 lbf·ft).

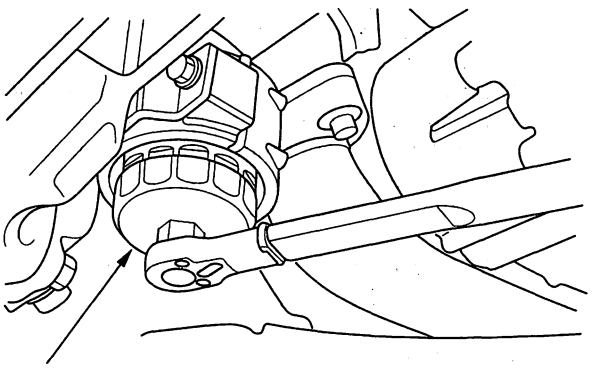


6. After installation, fill the engine with oil up to the specified level, run the engine for more than 3 minutes, then check for oil leakage.

## Oil Filter Base Replacement

1. Remove the oil filter (see page 8-10).

2. Remove the oil filter base (A).

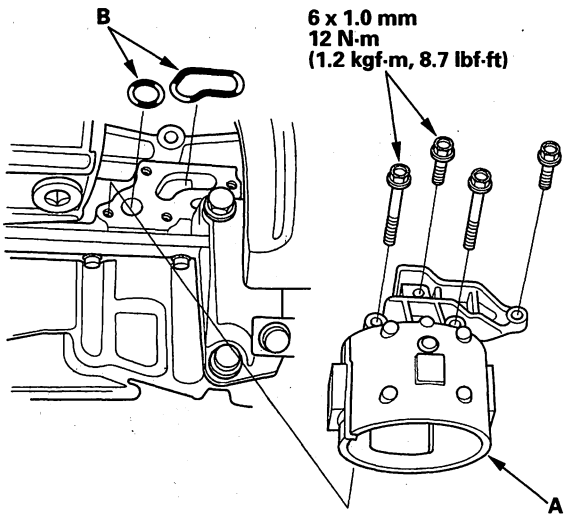


3. Clean the O-ring grooves and mating surfaces with the filter base, then install the oil filter base with new O-rings (B).

4. Install the oil filter (see page 8-10).

Protected by AR



## Oil Jet Replacement

1. Remove the oil pump (see page 8-14).
2. Remove the baffle plate (see step 7 on page 7-13).
3. Remove the oil jet bolt (A), then remove the oil jet (B).

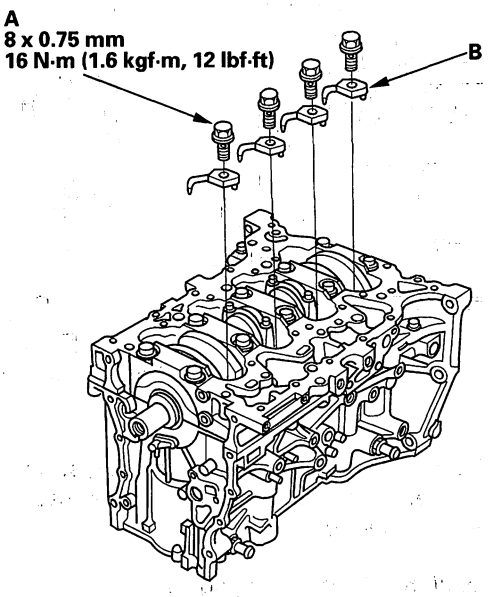


4. Carefully install the oil jet, and tighten the oil jet bolt.
5. Install the baffle plate (see step 23 on page 7-28).
6. Install the oil pump (see page 8-16).

## Oil Jet Inspection

1. Remove the oil jet, and inspect it as follows.
   - Make sure that a 1.1 mm (0.04 in.) diameter drill will go through the nozzle hole (A) (1.2 mm (0.05 in.) diameter).
   - Insert the other end of a 1.1 mm (0.04 in.) drill into the oil intake (1.2 mm (0.05 in.) diameter). Make sure the check ball (B) moves smoothly and has a stroke of approximately 4.0 mm (0.16 in.).
   - Check the oil jet operation with an air nozzle. It should take at least 200 kPa (2.0 kgf/cm$^2$, 28 psi) to unseat the check ball.

   NOTE: Replace the oil jet assembly if the nozzle is damaged or bent.

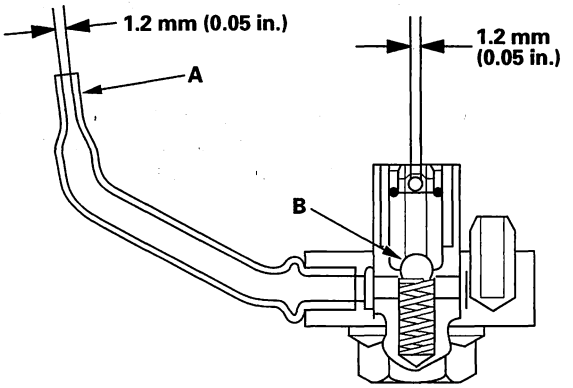


2. Carefully install the oil jet. The mounting torque is critical.

   **Torque: 16 N·m (1.6 kgf·m, 12 lbf·ft)**



BACK

Protected by AR

# Oil Pump Overhaul

## Exploded View

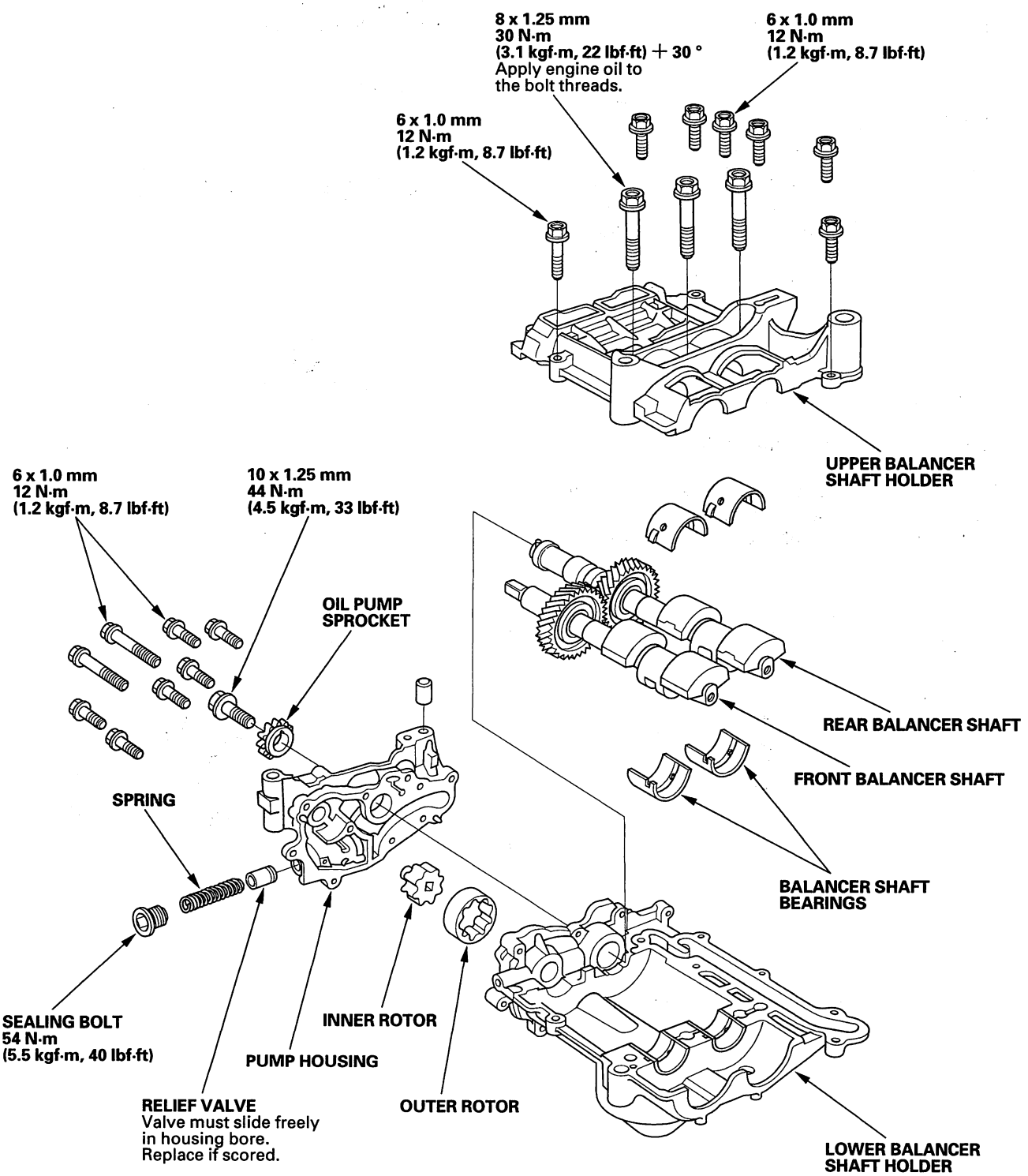


(cont'd)

Protected by AR



## Oil Pump Overhaul (cont'd)

### Oil Pump Removal

1. Turn the crankshaft pulley so its top dead center (TDC) mark (A) lines up with the pointer (B).

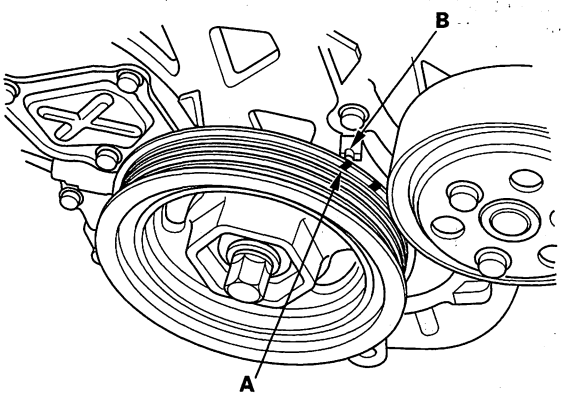


2. Remove the oil pan (see page 7-11).

3. Loosely install the crankshaft pulley.

4. To hold the rear balancer shaft, insert a 6 mm pin punch (A) into the maintenance hole in the balancer shaft holder and through the rear balancer shaft.

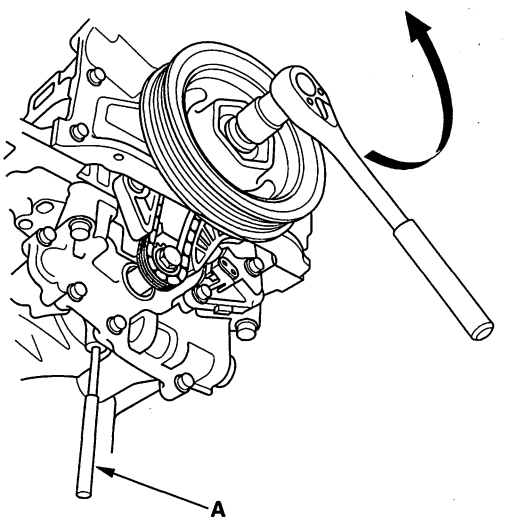


5. Turn the crankshaft counterclockwise to compress the oil pump chain auto-tensioner.

6. Align the holes on the lock (A) and the oil pump chain auto-tensioner (B), then insert a 1.5 mm (0.06 in.) diameter pin (C) into the holes. Turn the crankshaft clockwise to secure the pin.

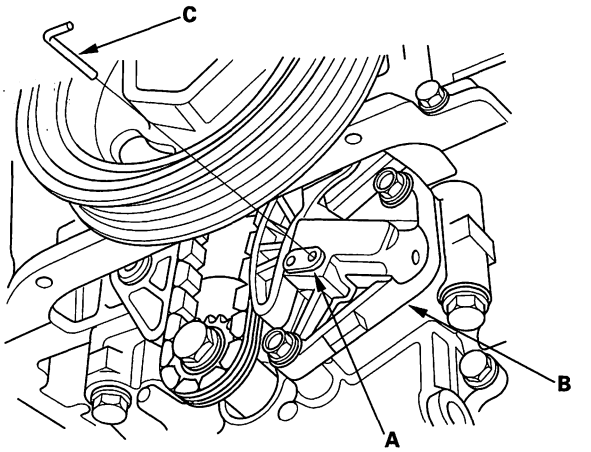


7. Remove the oil pump chain auto-tensioner.

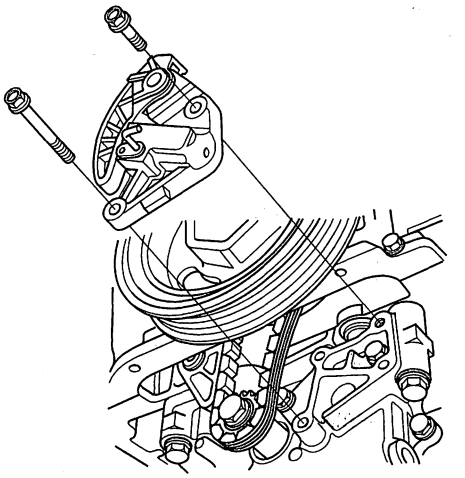



BACK

Protected by AR

8. Loosen the oil pump sprocket mounting bolt.

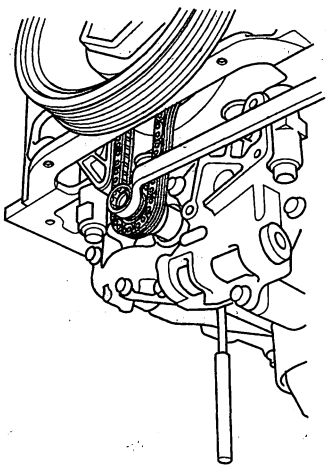

9. Remove the oil pump sprocket (A), then remove the oil pump (B).

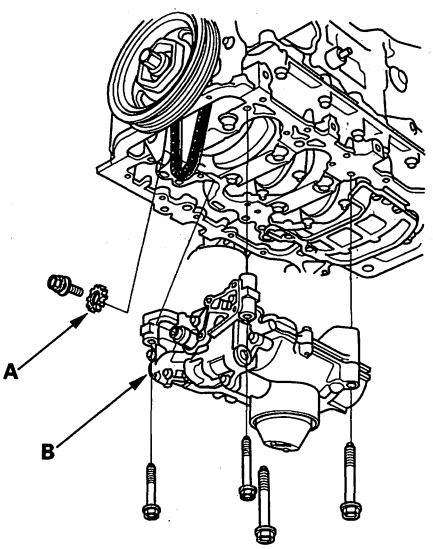


## Oil Pump Inspection

1. Remove the pump housing.

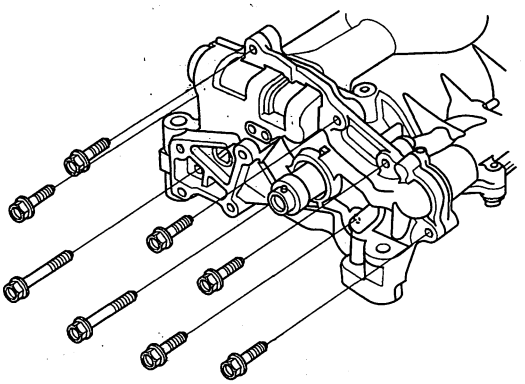

2. Check the inner-to-outer rotor radial clearance between the inner rotor (A) and outer rotor (B). If the inner-to-outer rotor radial clearance exceeds the service limit, replace the oil pump.

**Inner Rotor-to-Outer Rotor Radial Clearance**
**Standard (New): 0.10—0.17 mm (0.004—0.007 in.)**
**Service Limit: 0.2 mm (0.008 in.)**

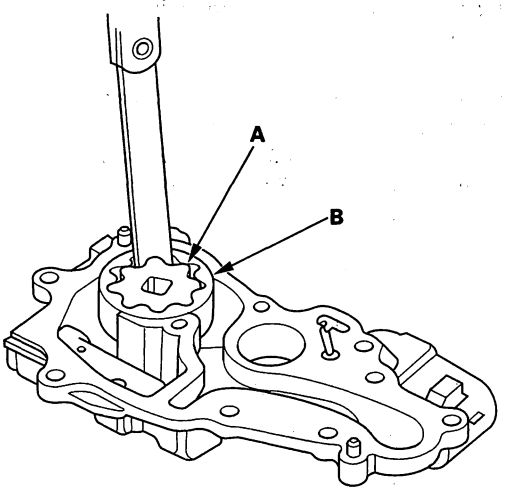


(cont'd)

Protected by AR



## Oil Pump Overhaul (cont'd)

3. Check the housing-to-rotor axial clearance between the rotor (A) and lower balancer shaft holder (B). If the housing-to-rotor axial clearance exceeds the service limit, replace the oil pump.

**Housing-to-Rotor Axial Clearance**
**Standard (New): 0.030—0.075 mm (0.0012—0.0030 in.)**
**Service Limit: 0.12 mm (0.005 in.)**

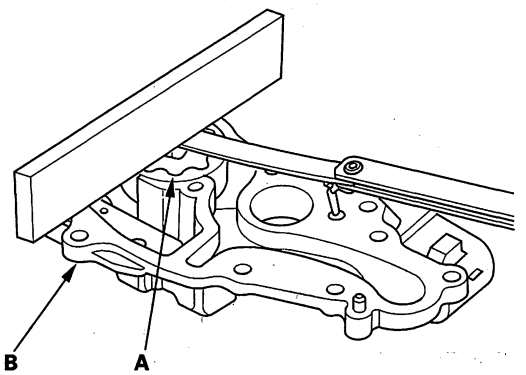


4. Check the housing-to-outer rotor radial clearance between the outer rotor (A) and lower balancer shaft holder (B). If the housing-to-outer rotor radial clearance exceeds the service limit, replace the oil pump.

**Housing-to-Outer Rotor Radial Clearance**
**Standard (New): 0.035—0.090 mm (0.0014—0.0035 in.)**
**Service Limit: 0.23 mm (0.009 in.)**

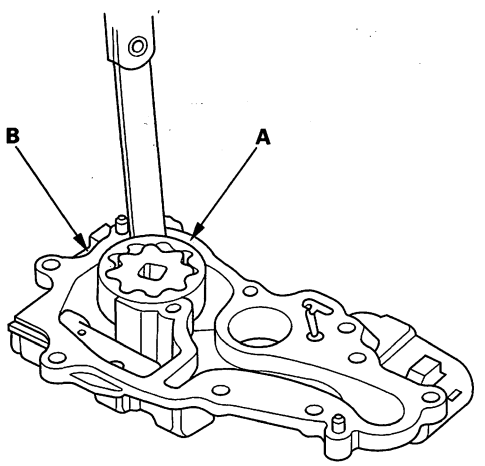


### Balancer Shaft Inspection

1. Seat the balancer shaft by pushing it away from the oil pump sprocket end of the oil pump.

2. Zero the dial indicator against the end of the balancer shaft, then push the balancer shaft back and forth and read the end play.

**Balancer Shaft End Play**
**Standard (New): 0.060—0.140 mm (0.0024—0.0055 in.)**
**Service Limit: 0.15 mm (0.006 in.)**

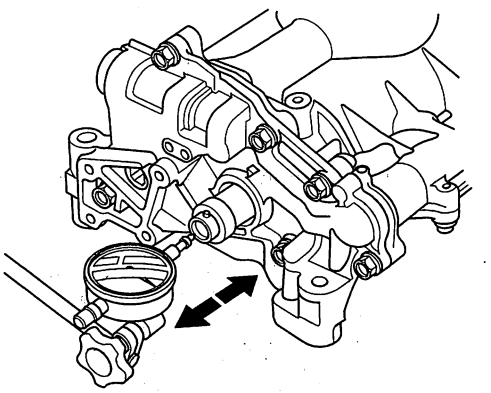

3. Remove the upper balancer shaft holder (with bearings) (A), then remove the front balancer shaft (B) and rear balancer shaft (C).

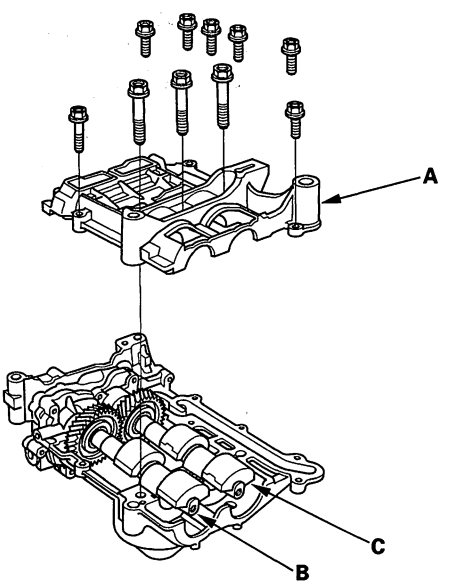




BACK

Protected by AR

4. Measure the inner diameter of the No. 1 bearing for the front balancer shaft hole and the rear balancer shaft hole.

**Bearing Inner Diameter**
**Front:**
**Standard (New): 20.000—20.020 mm (0.7874—0.7882 in.)**
**Service Limit: 20.03 mm (0.789 in.)**
**Rear:**
**Standard (New): 24.000—24.020 mm (0.9449—0.9457 in.)**
**Service Limit: 24.03 mm (0.946 in.)**

**Front**

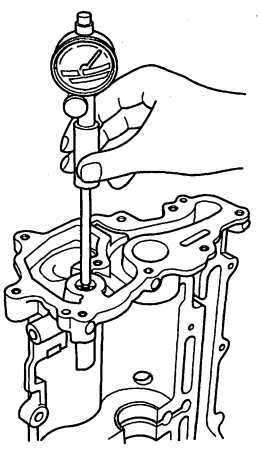

**Rear**

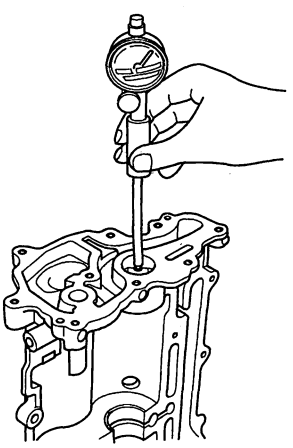

5. Measure the diameters of the No. 1 journals on the front balancer shaft and rear balancer shaft.

**Journal Diameter**
**Front:**
**Standard (New): 19.938—19.950 mm (0.7850—0.7854 in.)**
**Service Limit: 19.92 mm (0.784 in.)**
**Rear:**
**Standard (New): 23.938—23.950 mm (0.9424—0.9429 in.)**
**Service Limit: 23.92 mm (0.942 in.)**

**Front**

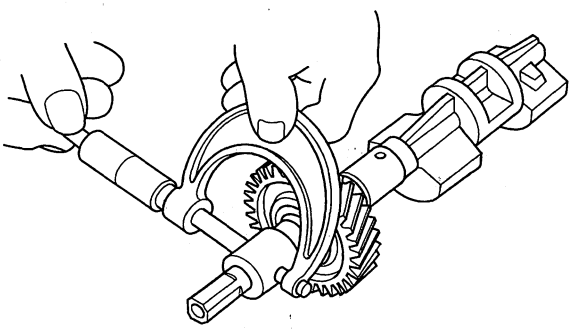

**Rear**

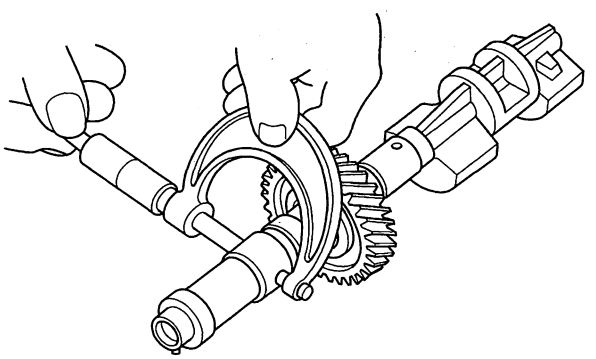

(cont'd)

Protected by AR



## Oil Pump Overhaul (cont'd)

6. Clean both balancer shaft No. 2 journals and bearing halves with a clean shop towel.

7. Place one strip of plastigage across each No. 2 journal.

8. Reinstall the bearings and upper balancer shaft holder, then torque the bolts.

   NOTE: Do not rotate the balancer shafts during inspection.

9. Remove the upper balancer shaft holder and bearings again, and measure the widest part with the plastigage. If the balancer shaft No. 2 journal oil clearance is out-of-tolerance, install new bearings, and recheck. If it is still out-of-tolerance, replace the balancer shafts.

   **No. 2 Journal Oil Clearance**
   **Standard (New): 0.060—0.120 mm (0.0024—0.0047 in.)**
   **Service Limit: 0.15 mm (0.006 in.)**

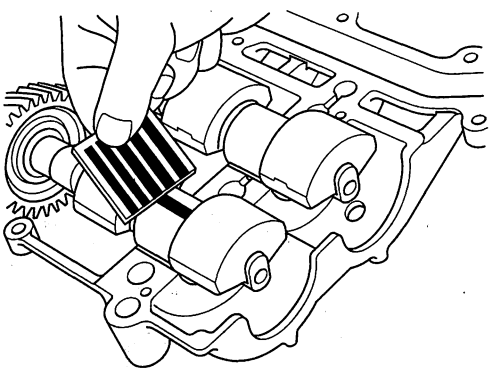

10. Align the punch mark on the rear balancer shaft in the center of the two punch marks on the front balancer shaft, then install the balancer shafts on the lower balancer shaft holder.

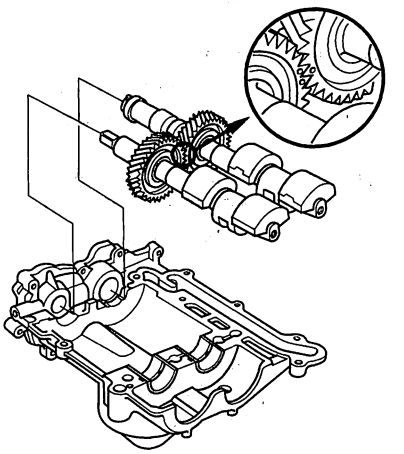

11. Apply engine oil to the threads of the 8 mm bolts (A).

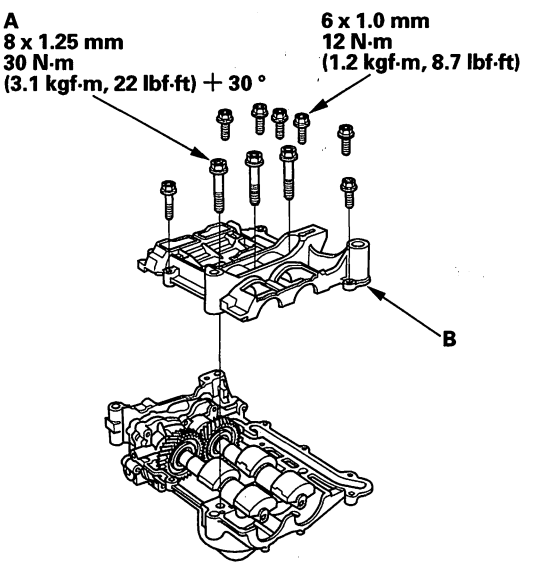


12. Install the upper balancer shaft holder (B).



BACK

Protected by AR

13. Install the pump housing.

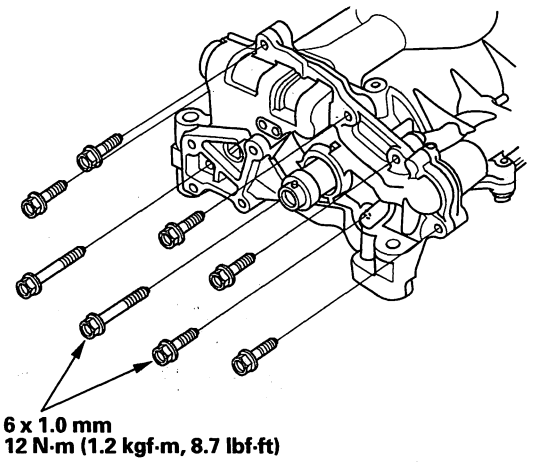


## Oil Pump Installation

1. Make sure the No. 1 piston top dead center (TDC) mark (A) lines up with the pointer (B).

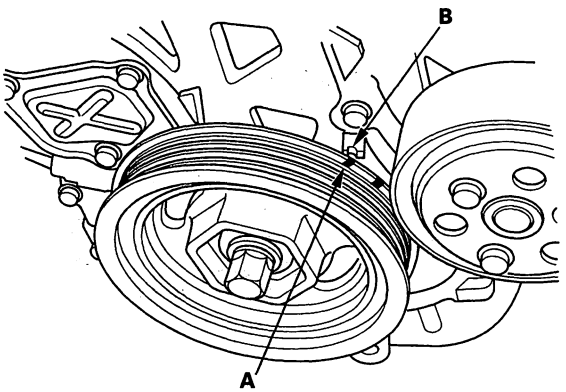


2. Align the dowel pin (A) on the rear balancer shaft with the mark (B) on the oil pump.

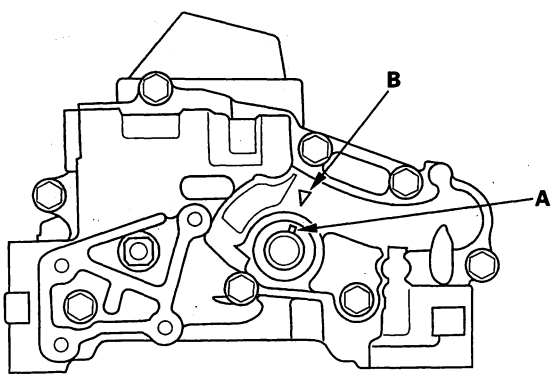


(cont'd)

Protected by AR



## Oil Pump Overhaul (cont'd)

3. To hold the rear balancer shaft, insert a 6 mm pin driver (A) into the maintenance hole in the lower balancer shaft holder and through the rear balancer shaft.

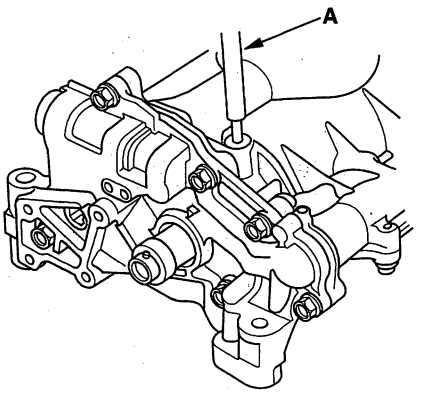


4. Apply engine oil to the threads of the 10 x 1.25 mm oil pump mounting bolts (A).

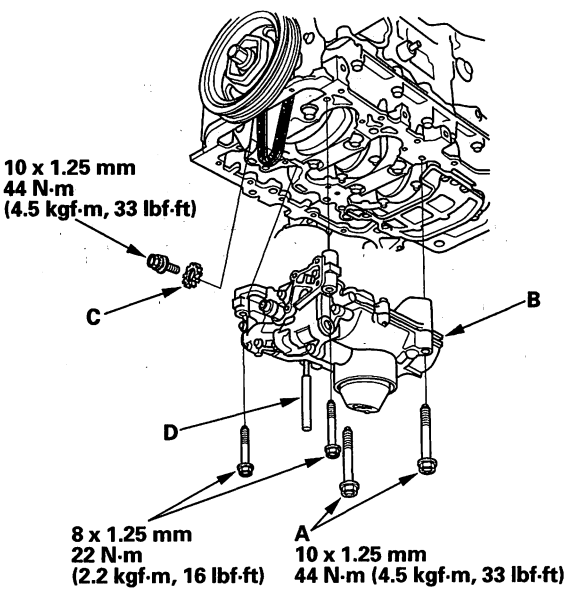


5. Loosely install the oil pump (B), then install the oil pump sprocket (C).

6. Remove the pin driver (D).

7. Tighten the oil pump mounting bolts.

8. Install the oil pump chain auto-tensioner.

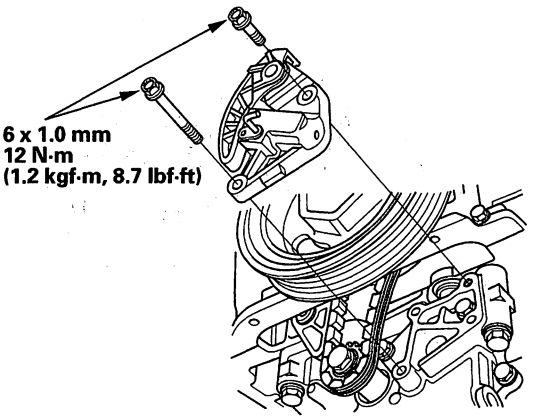


9. Remove the pin from the oil pump chain auto-tensioner.

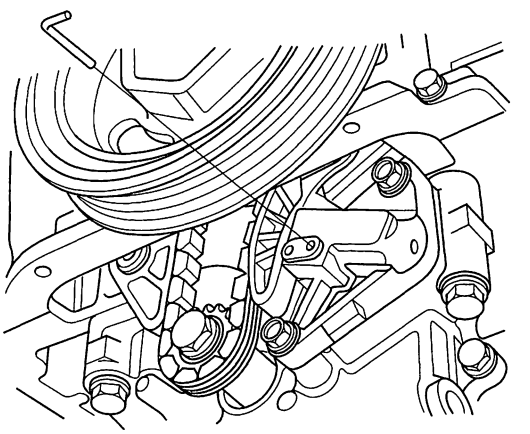

10. Install the oil pan (see page 7-29).



BACK

Protected by AR

# Oil Pump Chain Replacement

**Special Tools Required**
- RDX engine support mount pads 07AAK-STKA120
- Engine support hanger, A and Reds AAR-T-12566 *

* : Available through American Honda Tool and Equipment Program, 1-888-424-6857

NOTE: Keep the oil pump chain away from magnetic fields.

## Removal

1. Remove the drive belt (see page 4-31).

2. Remove the cam chain (see page 6-13).

3. Remove the power steering (P/S) pump. Do not disconnect the P/S hoses from the pump (see step 21 on page 5-5).

4. Attach the universal eyelet to the drive belt auto-tensioner (see step 54 on page 5-10).

5. Remove the top corner clip (A) from the front grill on both sides. Place the engine support mount pads over the hood edge cushions (B), and align the pins with the clip hole (C). Remove the lids from both side of the cowl cover. Install the engine support hanger (AAR-T-12566), then attach the hook to the universal eyelet. Tighten the wing nut (D) by hand to lift and support the engine/ transmission assembly.

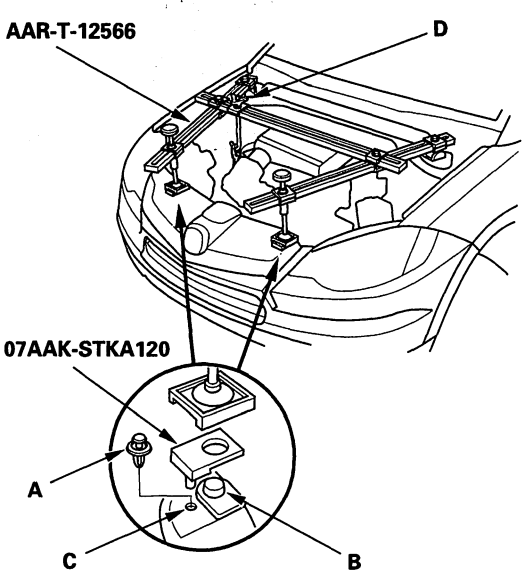


6. Remove the oil pan (see page 7-11).

7. Install the crankshaft pulley.

8. To hold the rear balancer shaft, insert the 6 mm pin punch (A) into the maintenance hole in the balancer shaft holder and through the rear balancer shaft.

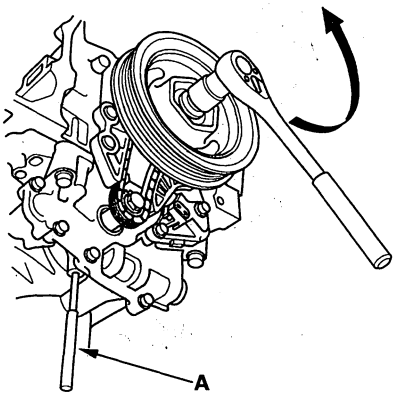


9. Turn the crankshaft counterclockwise to compress the oil pump chain auto-tensioner.

10. Align the holes on the lock (A) and the oil pump chain auto-tensioner (B), then insert a 1.5 mm (0.06 in.) diameter pin (C) into the holes. Turn the crankshaft clockwise to secure the pin.

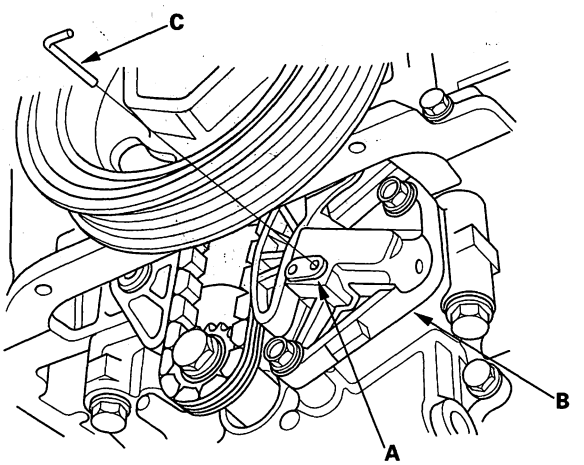


(cont'd)

Protected by AR



## Oil Pump Chain Replacement (cont'd)

11. Remove the oil pump chain auto-tensioner.

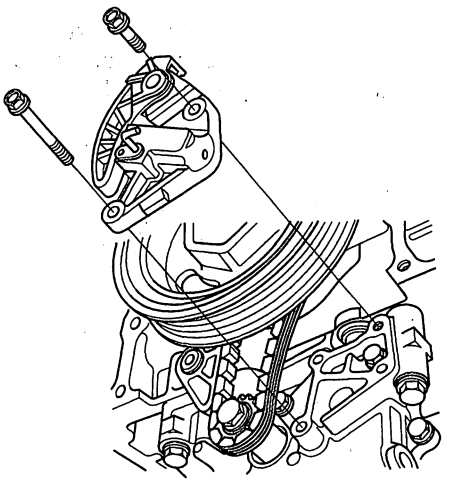

12. Remove the crankshaft pulley.

13. Remove the oil pump chain guide.

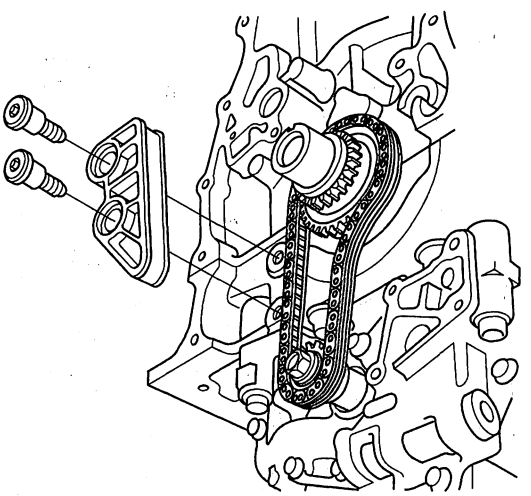

14. Loosen the oil pump sprocket mounting bolt.

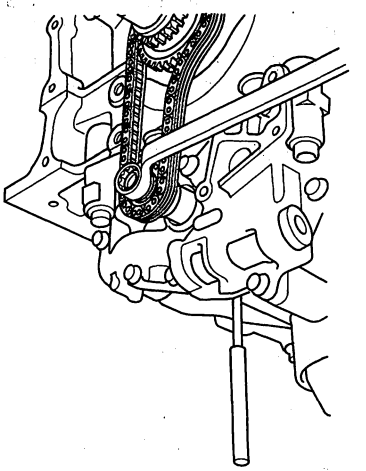

15. Remove the oil pump chain.

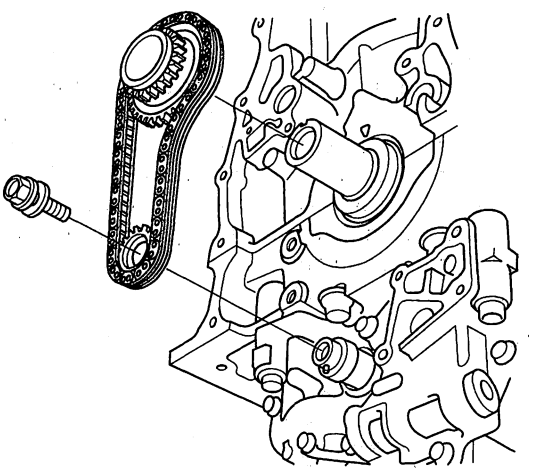



BACK

Protected by AR

## Installation

1. Set the crankshaft to top dead center (TDC). Align the TDC mark (A) on the crankshaft sprocket with the pointer (B) on the cylinder block.

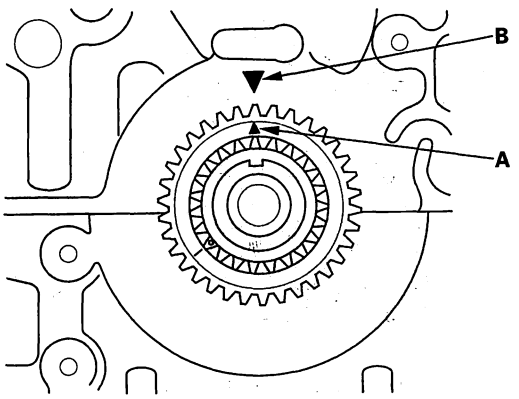


2. Install the oil pump chain on the crankshaft sprocket with the center of the two colored link plates (A) aligned with the TDC mark (B) on the oil crankshaft sprocket.

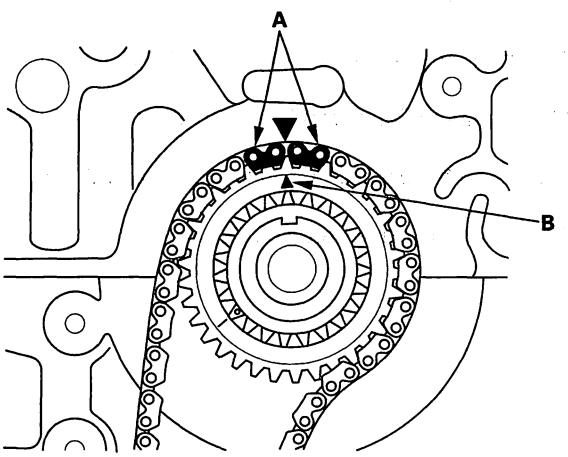


3. Install the oil pump chain on the oil pump chain sprocket with the punch mark (A) aligned with the center of the three colored link plates (B).

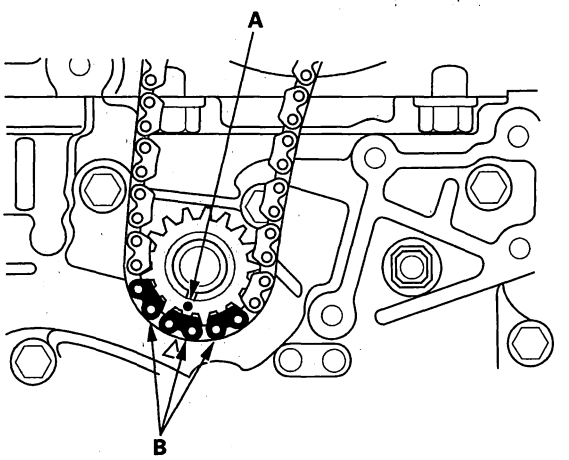


4. To hold the rear balancer shaft, insert the 6 mm pin punch (A) into the maintenance hole in the balancer shaft holder and through the rear balancer shaft, then tighten the oil pump sprocket mounting bolt (B).

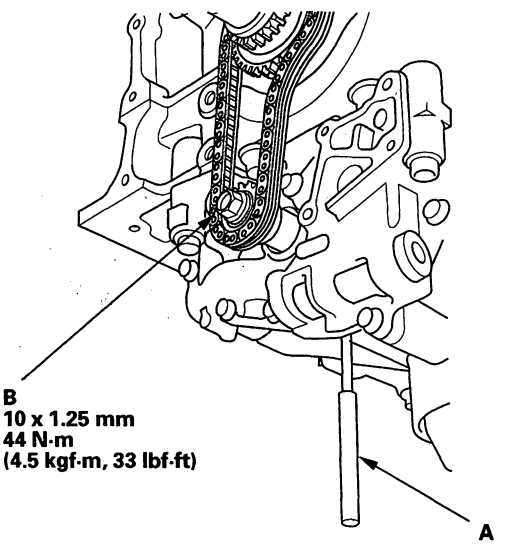


(cont'd)

Protected by AR



## Oil Pump Chain Replacement (cont'd)

5. Install the oil pump chain guide.

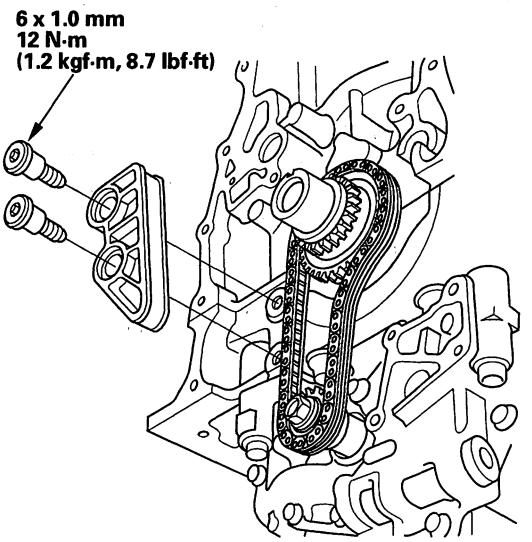


6. Install the oil pump chain auto-tensioner.

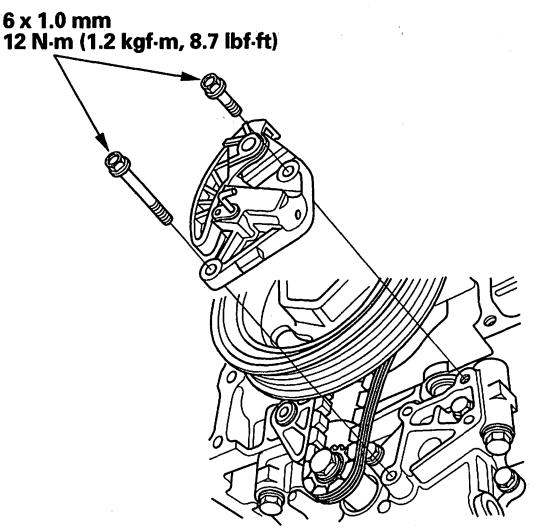


7. Remove the pin from the oil pump chain auto-tensioner.

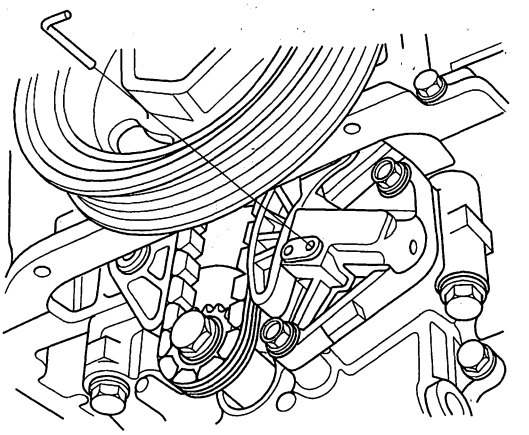

8. Install the oil pan (see page 7-29).
9. Support the engine with a jack and a wood block under the oil pan.
10. Remove the special tools from the engine and vehicle.
11. Install the cam chain (see page 6-16).
12. Install the P/S pump (see step 38 on page 5-17).
13. Install the crankshaft pulley (see page 6-12).
14. Install the drive belt (see page 4-31).



BACK

Protected by AR

# Engine Mechanical

## Intake Manifold and Exhaust System

Intake Manifold Removal and Installation ..... 9-2
Charge Air Cooler Removal and Installtion ..... 9-7
Turbocharger Bypass Control Valve Replacement ... 9-10
Turbocharger Bypass Control Valve Inspection ..... 9-10
Turbocharger and Exhaust Manifold
Removal and Installtion ..... 9-11
Exhaust Pipe and Muffler Replacement ..... 9-23

BACK

Protected by AR

# Intake Manifold and Exhaust System

## Intake Manifold Removal and Installation

### Exploded View

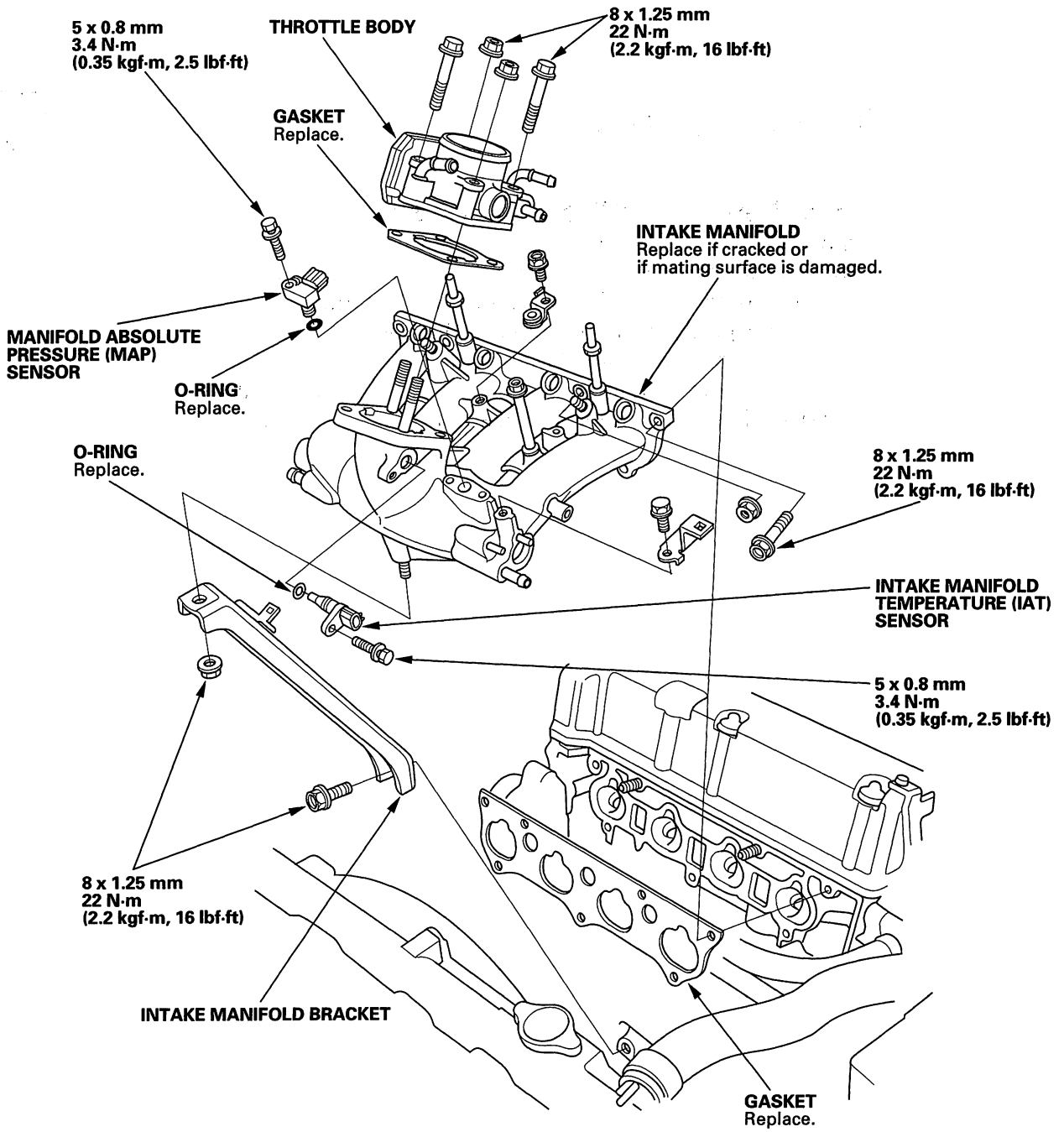




BACK

Protected by AR

## Removal

1. Relieve the fuel pressure (see page 11-362).
2. Remove the charge air cooler (see page 9-8).
3. Remove the fuel injector cover.

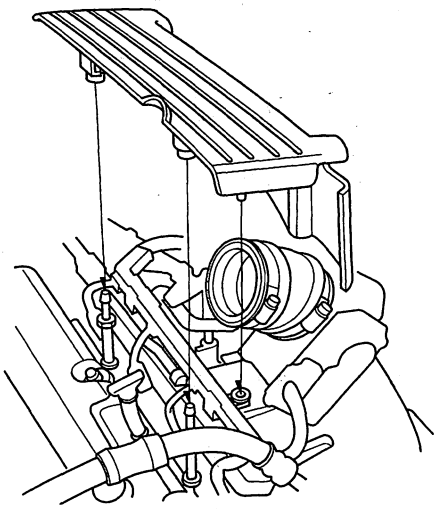

4. Remove the engine wire harness connectors and wire harness clamps from the intake manifold.
   - Four fuel injector connectors
   - Throttle actuator connector
   - Manifold absolute pressure (MAP) sensor connector
   - Intake manifold temperature (IAT) sensor connector
   - Turbocharger bypass control solenoid valve connector
5. Remove the quick-connect fitting cover (A), then disconnect the fuel feed hose (see page 11-372).

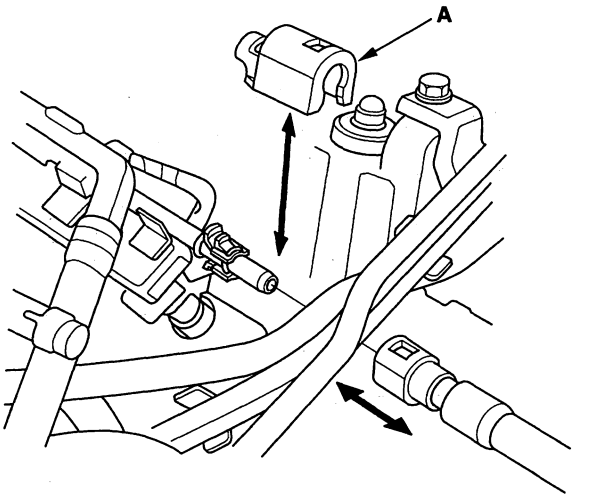


6. Remove the ground cable (A), vacuum hoses (B), brake booster vacuum hose (C), and turbocharger bypass control solenoid valve bracket mounting bolt (D).

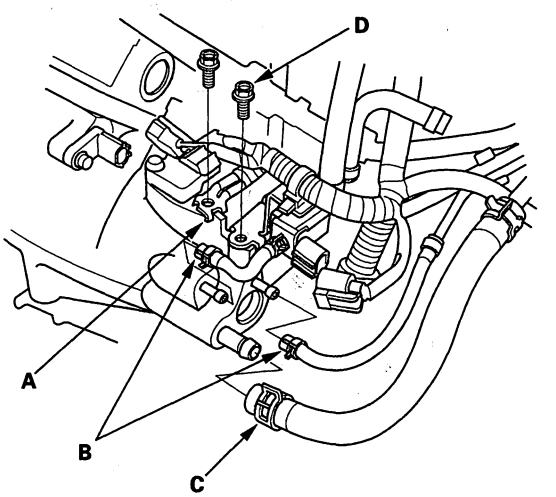


(cont'd)

Protected by AR



## Intake Manifold Removal and Installation (cont'd)

7. Remove the evaporative emission (EVAP) canister hose (A) and water bypass line bracket mounting bolt (B).

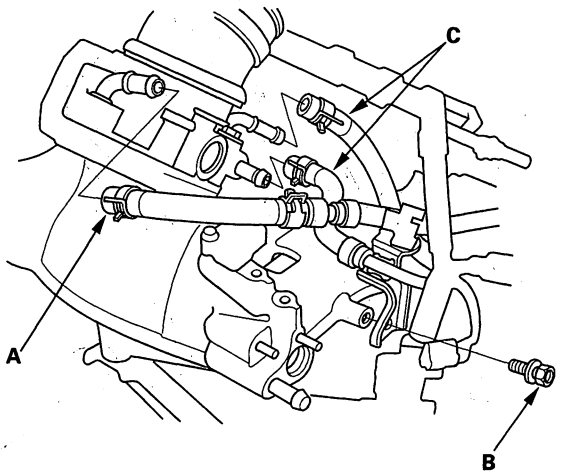


8. Remove the water bypass hoses (C), then plug the water bypass hoses.

9. Remove the positive crankcase ventilation (PCV) hose (A) and harness holder (B).

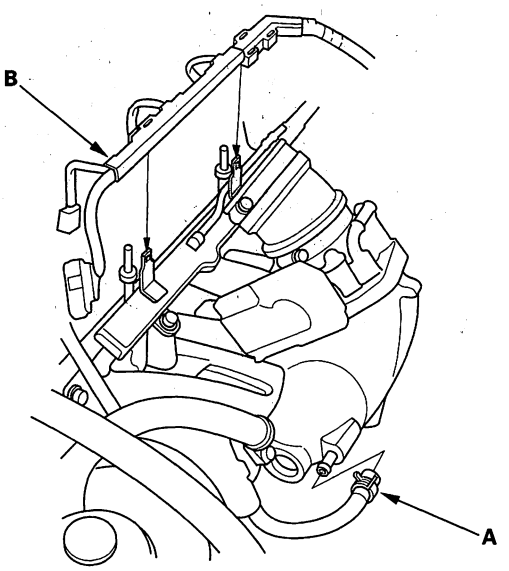


10. Remove the harness clamp (A) and connector (B), then remove the intake manifold bracket (C).

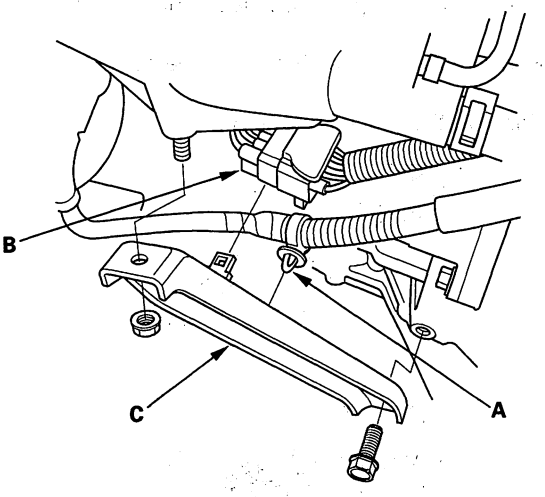


11. Remove the intake manifold.

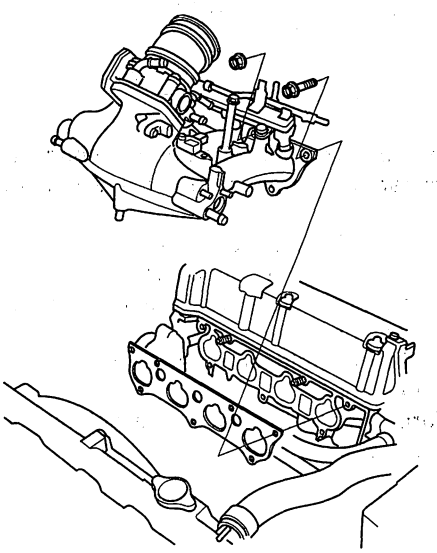

Protected by AR

## Installation

1. Install the intake manifold (A) with a new gasket (B), and tighten the bolts and nuts in a crisscross pattern in two or three steps, beginning with the inner bolt.

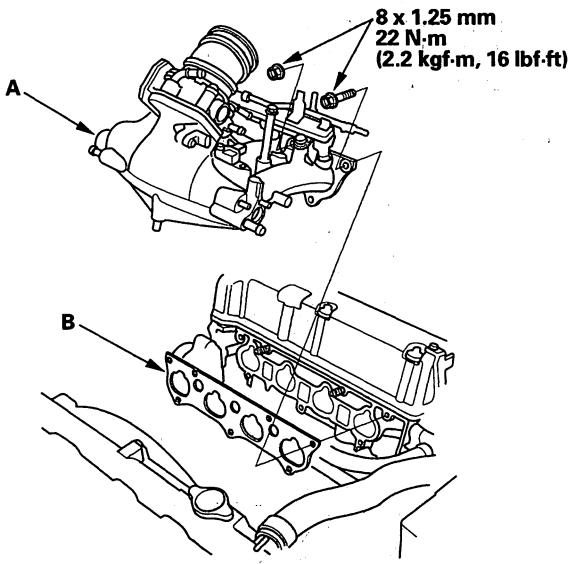


2. Install the intake manifold bracket (A), then install the harness clamp (B) and connector (C).

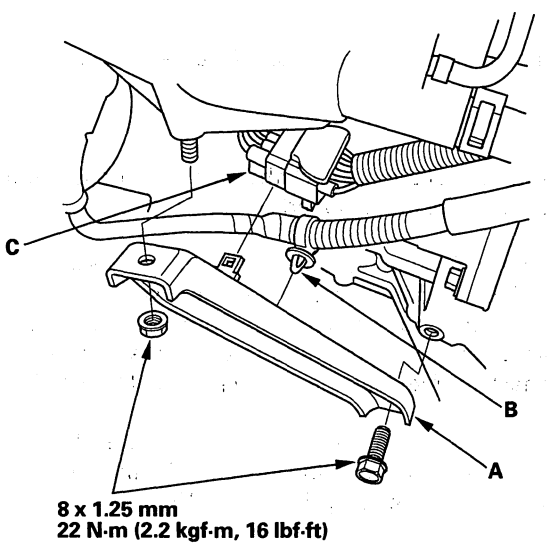


3. Install the PCV hose (A) and harness holder (B).

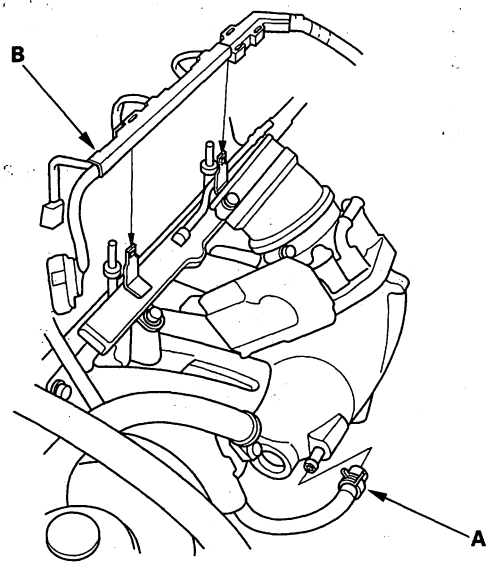


4. Install the water bypass hoses (A), EVAP canister hose (B), and water bypass line bracket mounting bolt (C).

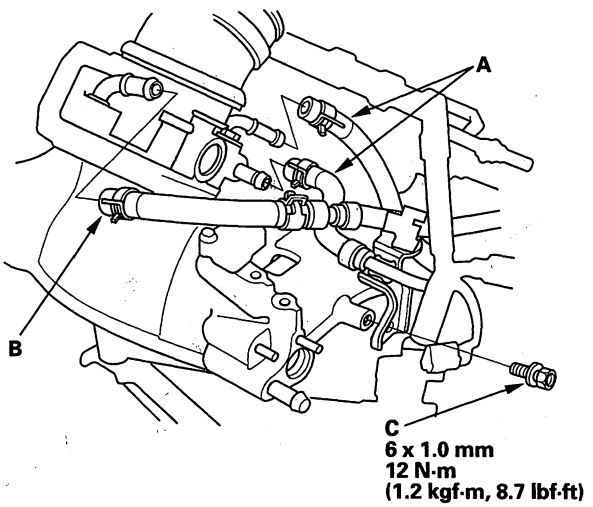


(cont'd)

Protected by AR



## Intake Manifold Removal and Installation (cont'd)

5. Install the ground cable (A), vacuum hoses (B), brake booster vacuum hose (C), and turbocharger bypass control solenoid valve bracket mounting bolt (D).

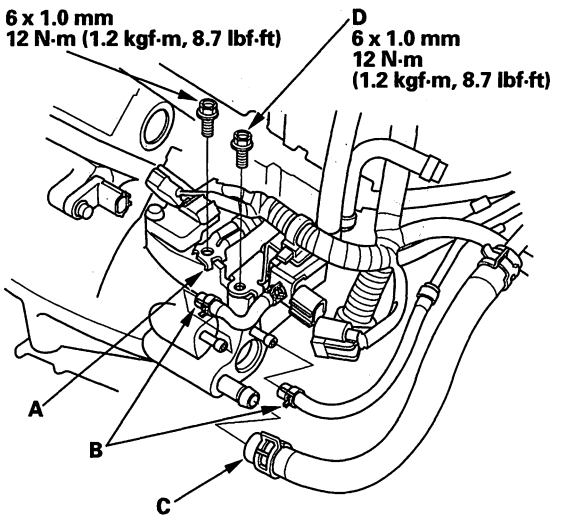


6. Connect the fuel feed hose (see page 11-372), then install the quick-connect fitting cover (A).

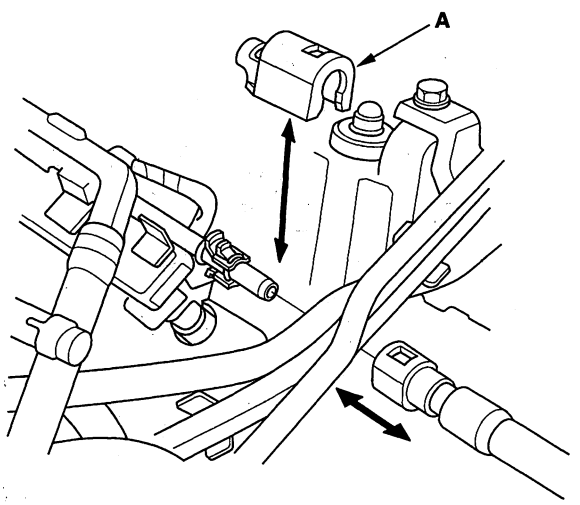


7. Connect the engine wire harness connectors, and install the wire harness clamps to the intake manifold.

   - Four fuel injector connectors
   - Throttle actuator connector
   - MAP sensor connector
   - IAT sensor connector
   - Turbocharger bypass control solenoid valve connector

8. Install the fuel injector cover.

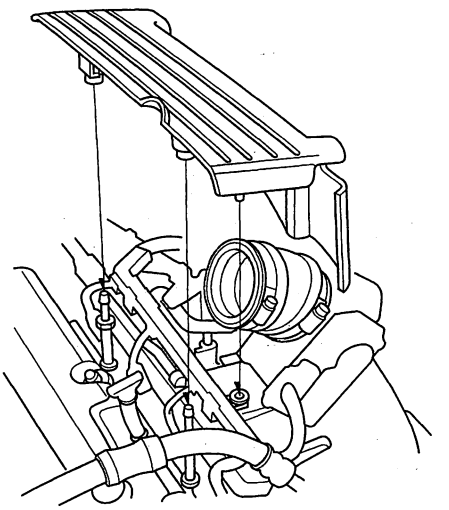

9. Install the charge air cooler (see page 9-9).

10. Clean up any spilled engine coolant.

11. After installation, check that all tubes, hoses, and connectors are installed correctly.

12. Inspect for fuel leaks: Turn the ignition switch ON (II) (do not operate the starter ) so the fuel pump runs for about 2 seconds and pressurizes the fuel line. Repeat this operation two or three times, then check for fuel leakage at any point in the fuel line.

13. Refill the radiator with engine coolant, and bleed the air from the cooling system with the heater valve open (see step 6 on page 10-7).

Protected by AR

# Charge Air Cooler Removal and Installation

## Exploded View

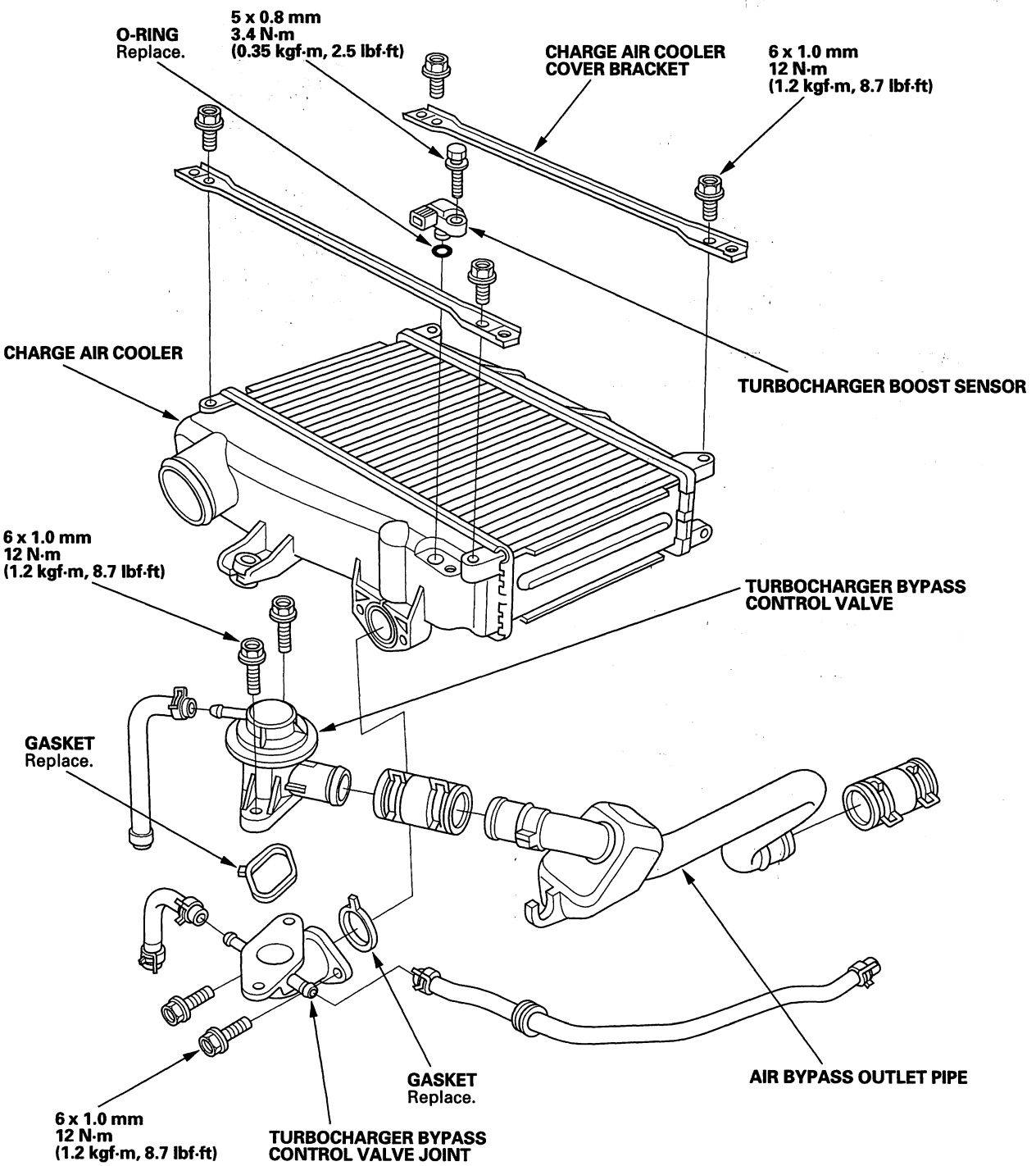


(cont'd)

Protected by AR



## Charge Air Cooler Removal and Installation (cont'd)

### Removal

1. Remove the charge air cooler cover.

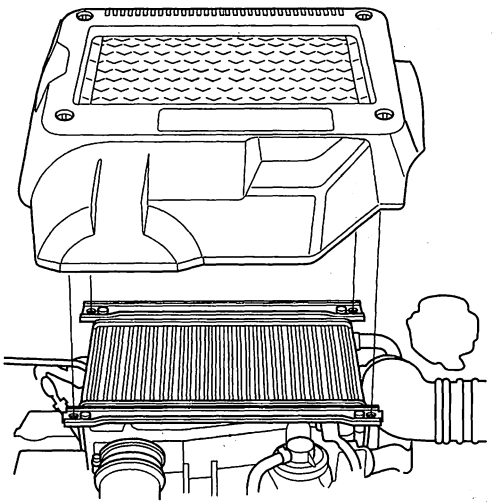

2. Disconnect the turbocharger boost sensor connector (A), then remove the vacuum hoses (B) and air bypass outlet connecting tube (C).

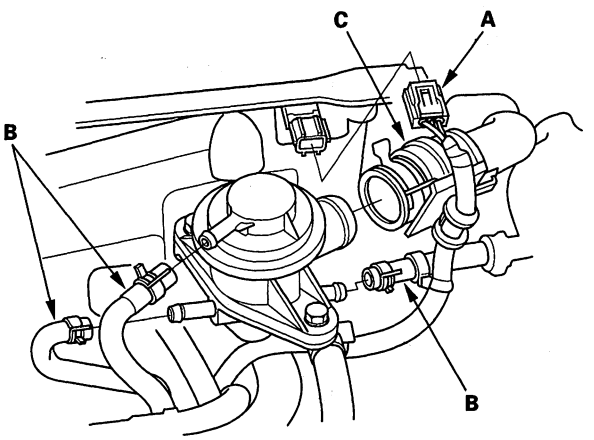


3. Remove the charge air cooler.

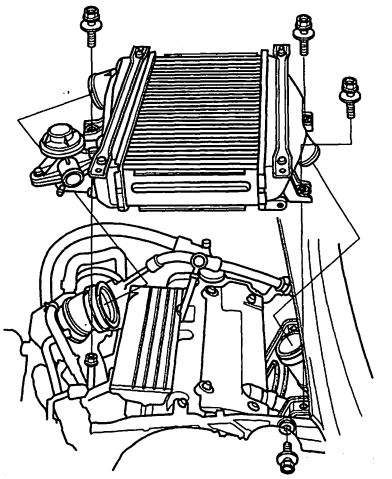

Protected by AR

## Installation

1. Install the charge air cooler (A), and set the intake air ducts (charge air cooler inlet hose and charge air cooler outlet tube), then tighten the hose bands until the edge (B) of the hose band align with the mark (C) on the hose band.

   NOTE: If the hose band edge exceeds the mark, replace the hose band.

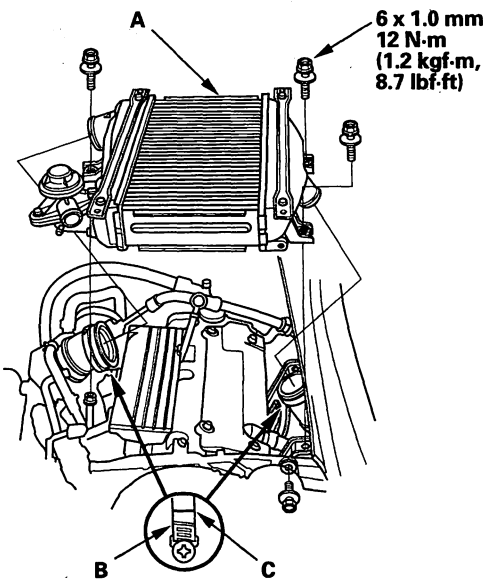


2. Install the vacuum hoses (A) and air bypass outlet connecting tube (B), then connect the turbocharger boost sensor connector (C).

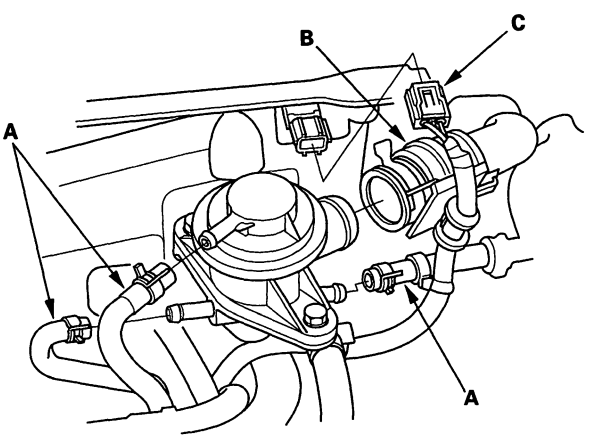


3. Install the charge air cooler cover.

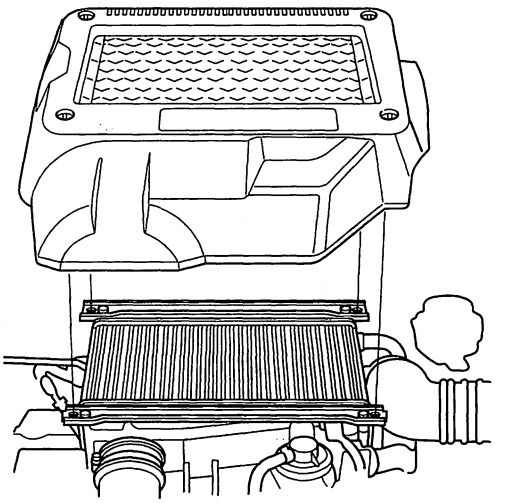

Protected by AR



## Turbocharger Bypass Control Valve Replacement

1. Remove the charge air cooler cover (see step 1 on page 9-8).

2. Disconnect the turbocharger boost sensor connector (A).

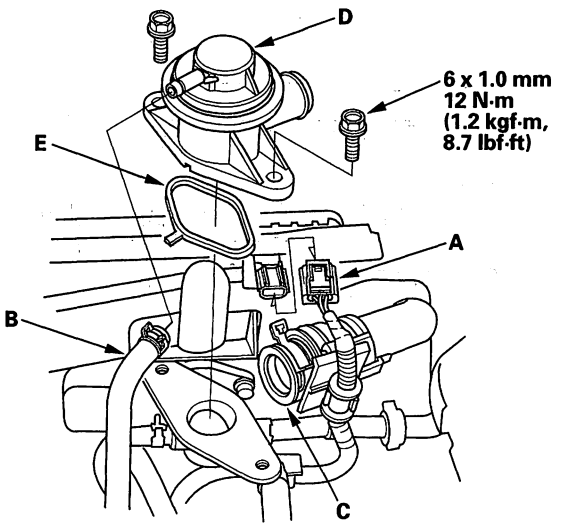


3. Remove the vacuum hose (B) and air bypass outlet connecting tube (C), then remove the turbocharger bypass control valve (D).

4. Install the turbocharger bypass control valve with a new gasket (E).

5. Install the vacuum hose and intake air duct, then connect the turbocharger boost sensor connector.

6. Install the charge air cooler cover (see step 3 on page 9-9).

## Turbocharger Bypass Control Valve Inspection

**Special Tools Required**
Vacuum pump/gauge, 0-30 in.Hg, Snap-on YA4000A or equivalent, commercially available

1. Remove the turbocharger bypass control valve (see page 9-10).

2. Connect a commercially available vacuum pump/gauge, 0-30 in.Hg. Apply vacuum to the turbocharger bypass control valve. Make sure the turbocharger bypass control valve moves. If the valve does not move, replace the turbocharger bypass control valve.

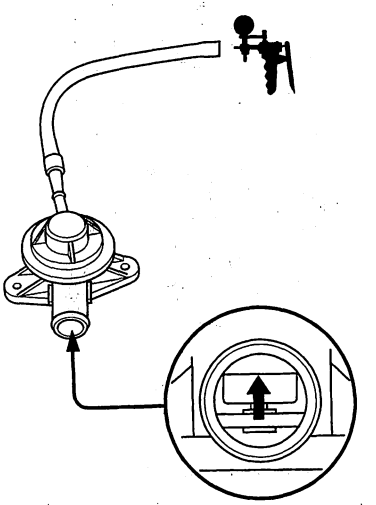

Protected by AR

# Turbocharger and Exhaust Manifold Removal and Installation

## Exploded View

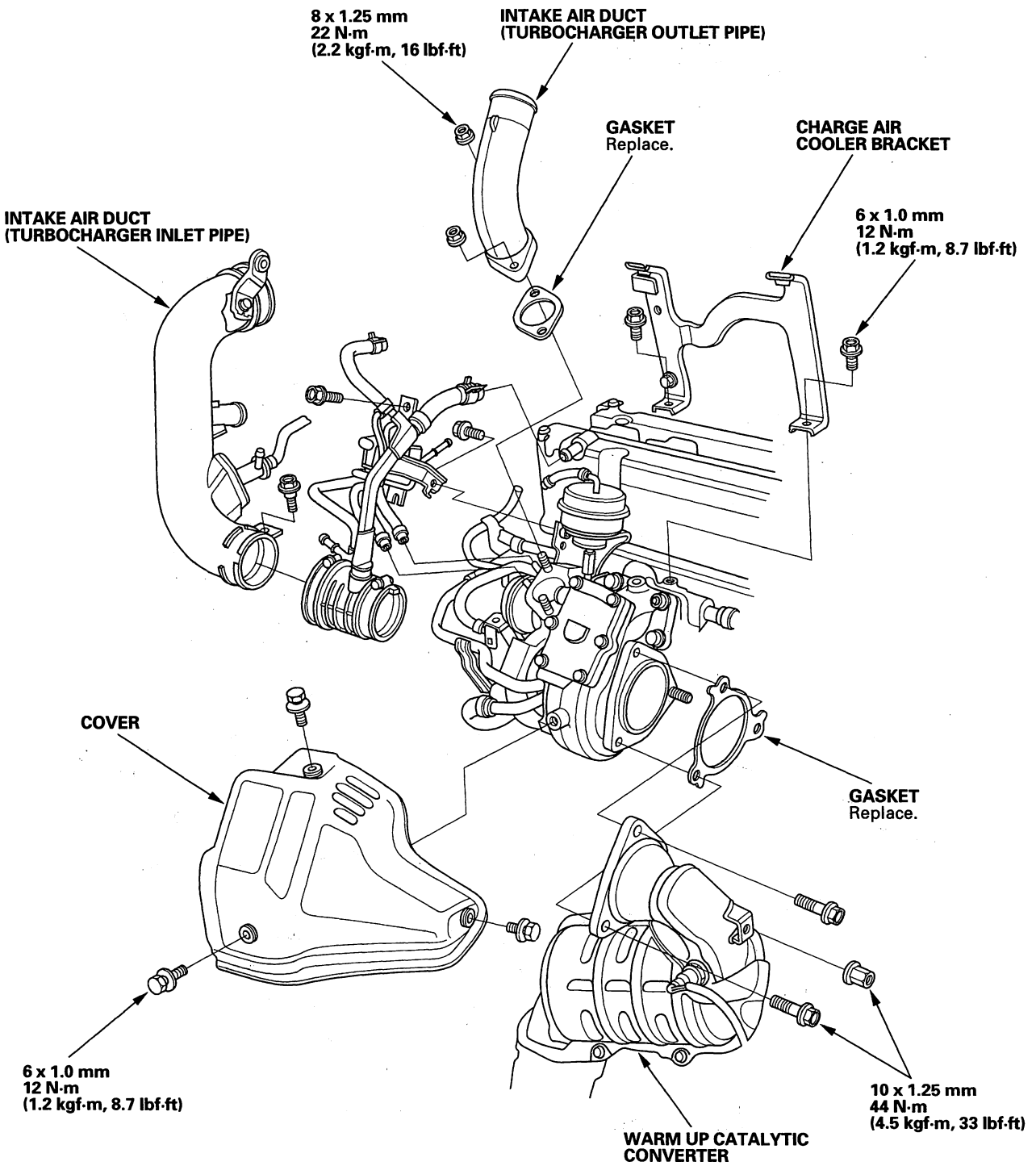


(cont'd)

Protected by AR



## Turbocharger and Exhaust Manifold Removal and Installation (cont'd)

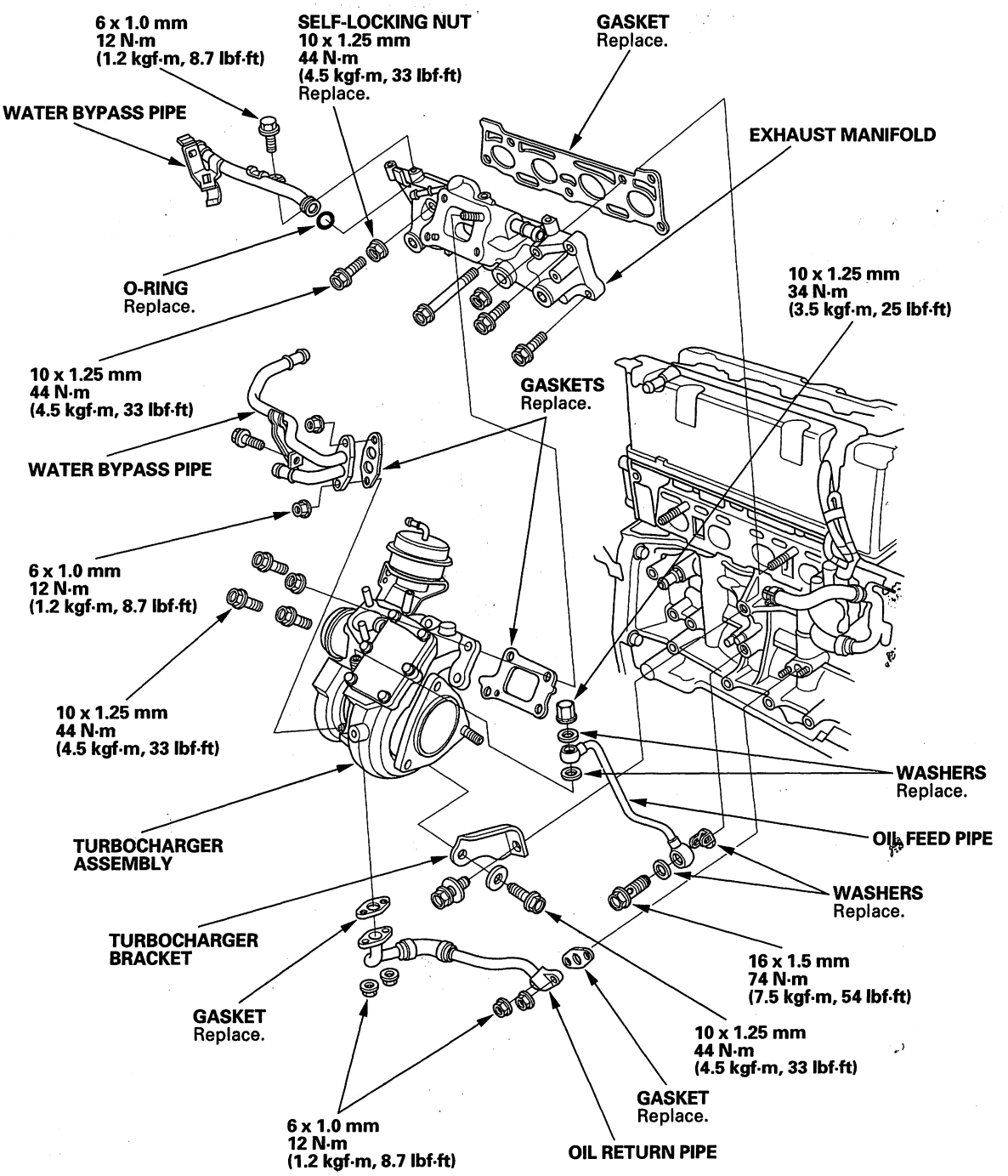

Protected by AR

## Removal

1. Drain the engine coolant (see page 10-7).
2. Remove the cowl cover and under-cowl panel (see page 20-163).
3. Remove the air cleaner housing assembly (see page 11-394).
4. Remove the charge air cooler (see page 9-8).
5. Remove the warm up catalytic converter (see page 11-440).
6. Remove the under-hood fuse/relay box from the bracket.

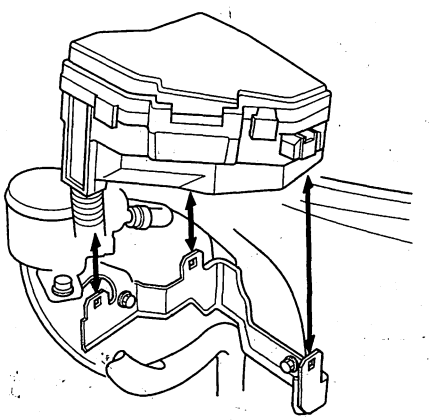

7. Remove the master cylinder reservoir (A) from the bracket, then remove the bracket (B).

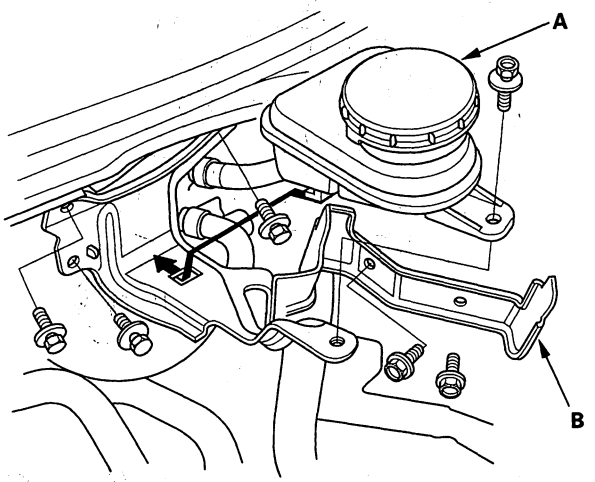


8. Remove the heater hoses (A), then open the cable clamp, and remove the heater valve cable (B).

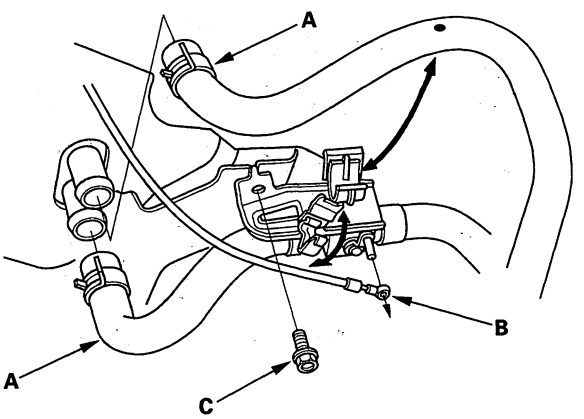


9. Remove the heater valve mounting bolt (C).

(cont'd)

Protected by AR



## Turbocharger and Exhaust Manifold Removal and Installation (cont'd)

10. Remove the air bypass outlet pipe (A).

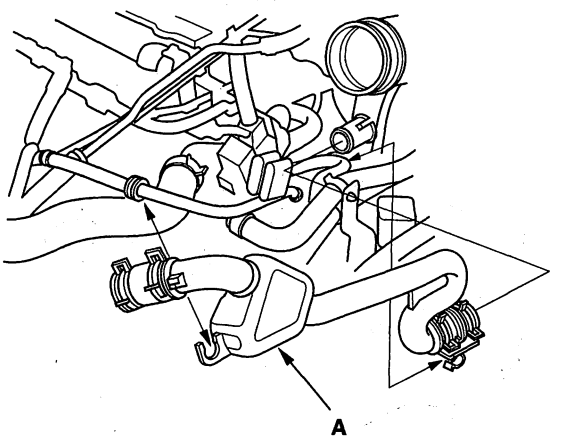


11. Remove the evaporative emission (EVAP) canister hose (A), then remove the intake air duct (turbocharger inlet pipe) (B).

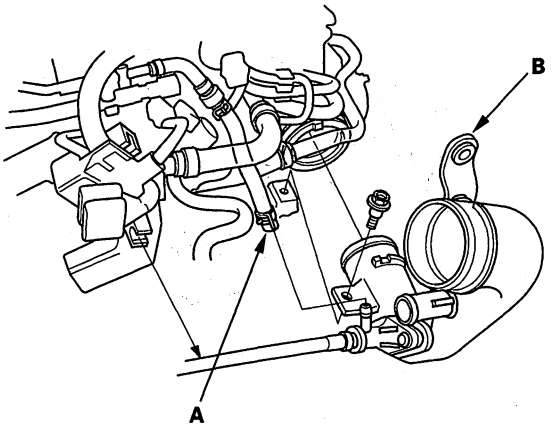


12. Remove the intake air ducts (charge air cooler inlet hose/turbocharger outlet pipe assembly).

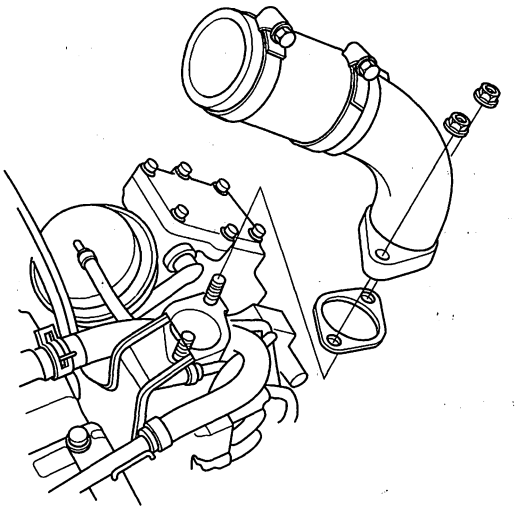

13. Remove the breather hose (A) and water bypass hose (B), then remove the water bypass line mounting bolt (C).

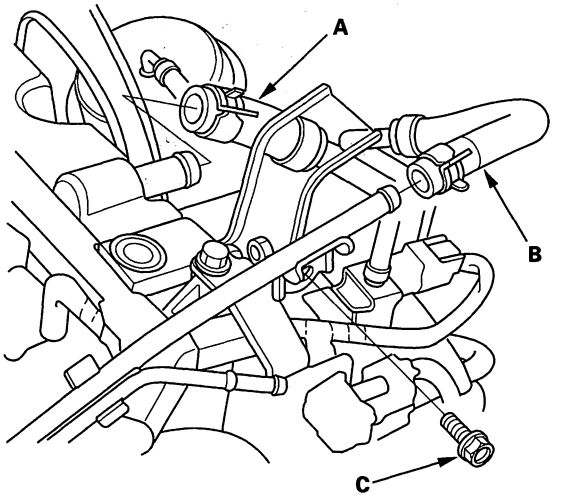

Protected by AR

14. Disconnect the turbocharger wastegate control solenoid valve connector and turbocharger boost control solenoid valve connector.

15. Remove the vacuum hose (A), vacuum line mounting bolt (B), and solenoid valve bracket mounting bolt (C), then loosen the solenoid valve bracket mounting bolt (D), and remove the solenoid valve bracket (E).

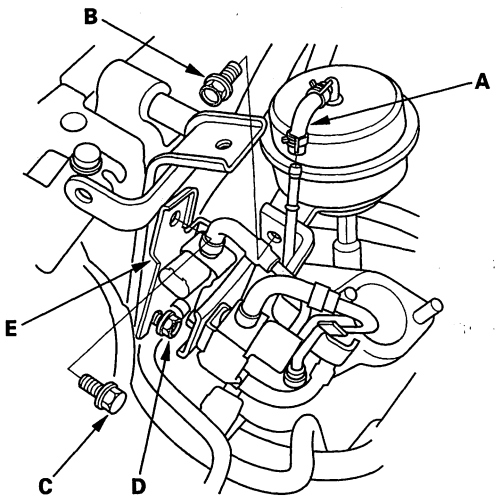


16. Remove the charge air cooler bracket.

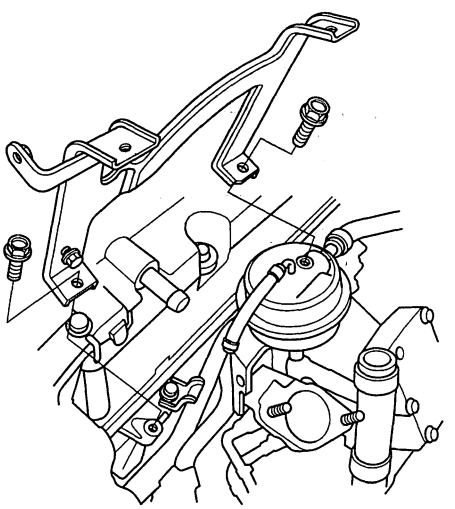

17. Remove the water bypass hose (A) and vacuum hoses (B).

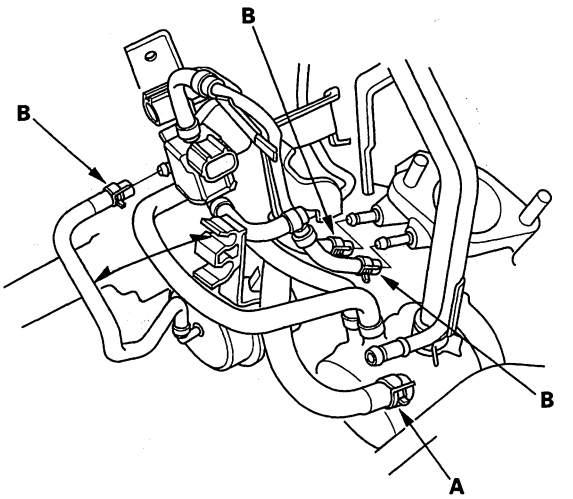


18. Remove the water bypass pipe from the turbocharger.

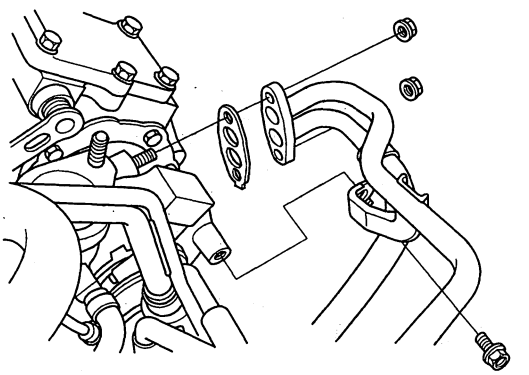

(cont'd)

Protected by AR



## Turbocharger and Exhaust Manifold Removal and Installation (cont'd)

19. Remove the intake air duct (turbocharger inlet connecting tube).

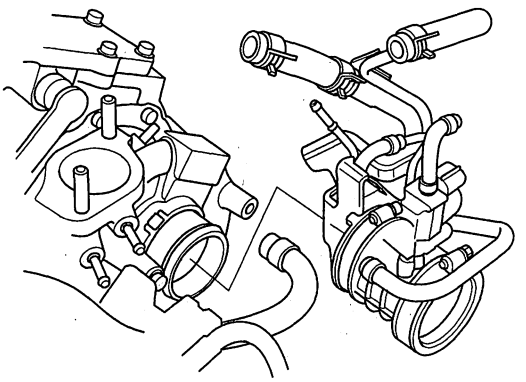

20. Raise the vehicle on the lift to full height.

21. Remove the oil return pipe (A), then remove 16 x 1.5 mm bolt (B) at the oil feed pipe.

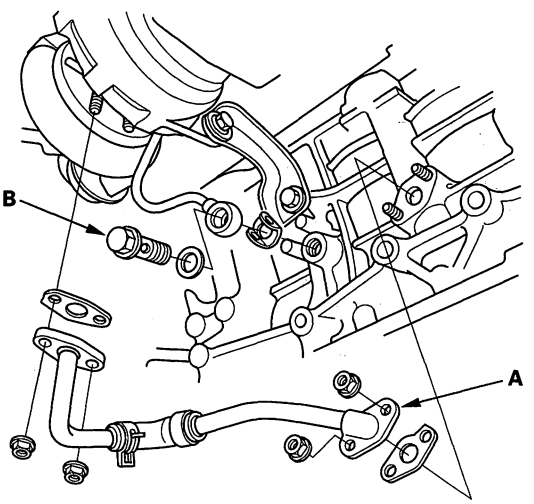


22. Remove the turbocharger bracket.

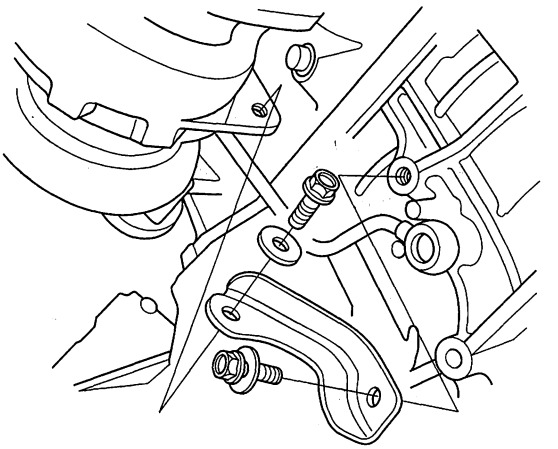

23. Lower the vehicle on the lift.

24. Remove the oil feed pipe.

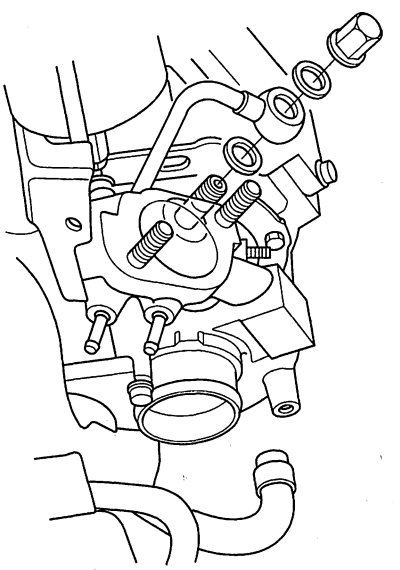

Protected by AR

25. Remove the turbocharger assembly, then seal the air inlet, air outlet, oil line hole, and water line hole with tape.

    NOTE: Use care when handling the turbocharger assembly. Do not turn the actuator rod adjusting nut, or touch the impeller.

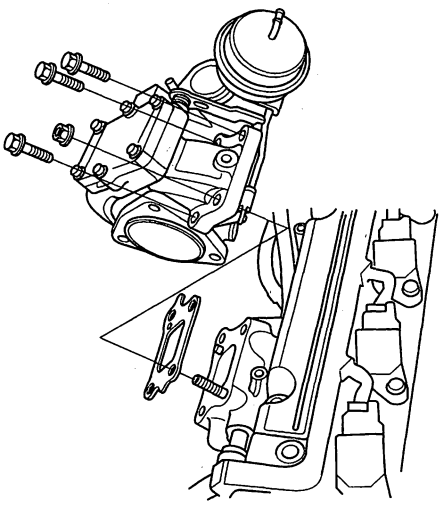

26. Remove the water bypass hoses (A), then remove the exhaust manifold (B).

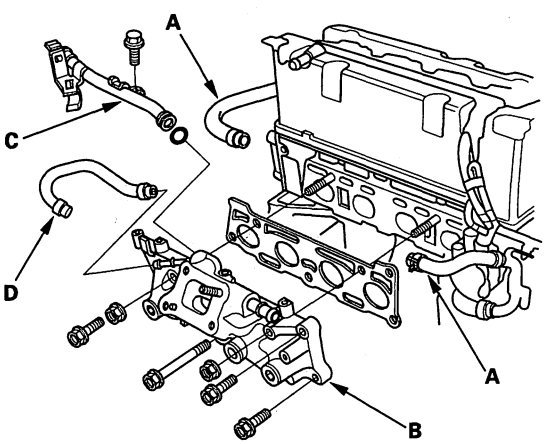


27. Remove the water bypass pipe (C) and water bypass hose (D) from the exhaust manifold.

## Installation

1. Install the water bypass pipe (A) with a new O-ring (B), then install the water bypass hose (C).

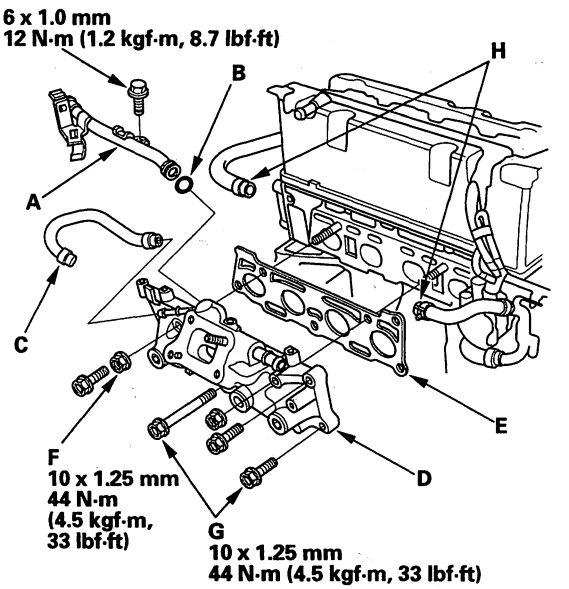


2. Install the exhaust manifold (D) with a new gasket (E) and new self-locking nuts (F) and bolts (G), and tighten the bolts and nuts in a crisscross pattern in two or three steps, beginning with the inner bolt.

3. Install the water bypass hoses (H).

(cont'd)

Protected by AR



## Turbocharger and Exhaust Manifold Removal and Installation (cont'd)

4. Pour new engine oil into turbocharger oil line.

5. Install the turbocharger assembly (A) with a new gasket (B).

   NOTE: Use care when installing the turbocharger assembly. Do not turn the actuator rod adjusting nut, or touch the impeller.

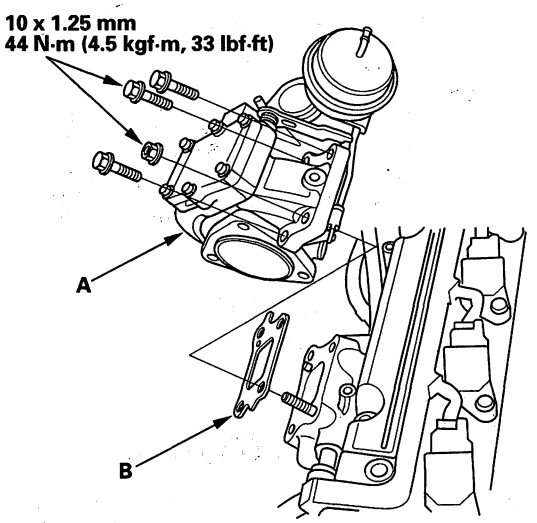


6. Check the oil feed pipe (A) for clogs. If it is clogged, clean or replace the pipe. Install the oil feed pipe with new washers (B), and loosely tighten the 10 x 1.25 mm nut (C).

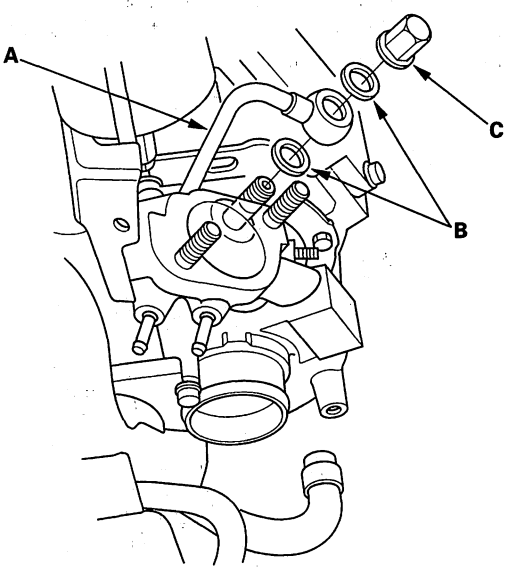


7. Raise the vehicle on the lift to full height.

8. Install the turbocharger bracket.

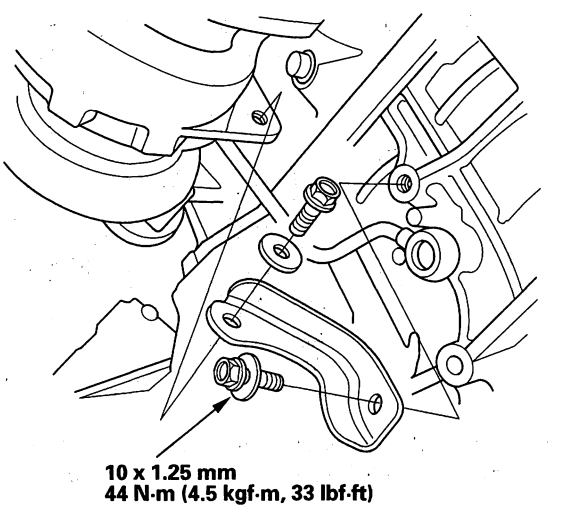

Protected by AR

9. Check the bolt (A) and oil return pipe (B) for clogs. If they are clogged, clean or replace the bolt and/or pipe.

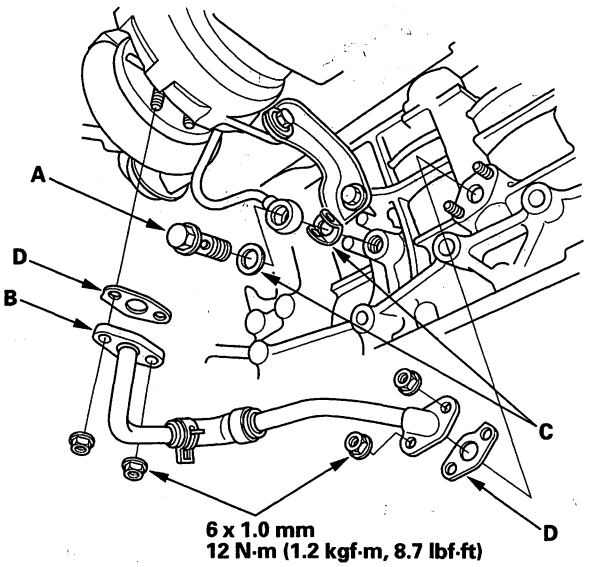


10. Loosely tighten the 16 x 1.5 mm bolt with new washers (C), then install the oil return pipe with new gaskets (D).

11. Lower the vehicle on the lift.

12. Tighten the 10 x 1.25 mm nut.

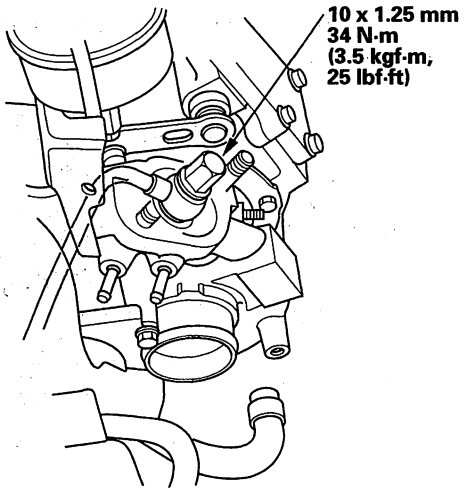


13. Raise the vehicle on the lift to full height.

14. Tighten the 16 x 1.5 mm bolt.

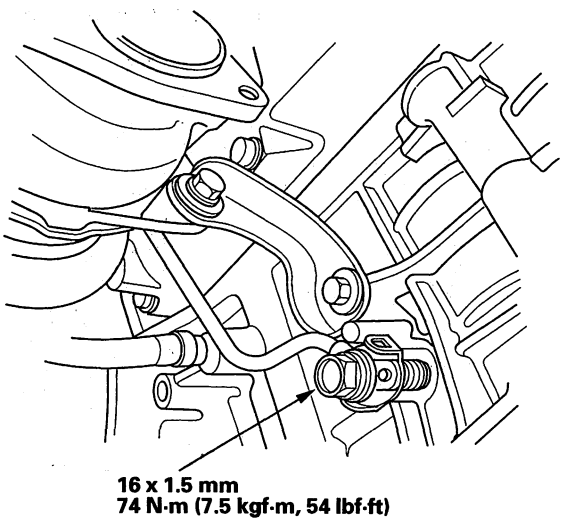


(cont'd)

Protected by AR



## Turbocharger and Exhaust Manifold Removal and Installation (cont'd)

15. Lower the vehicle on the lift.

16. Install the intake air duct (turbocharger inlet connecting tube).

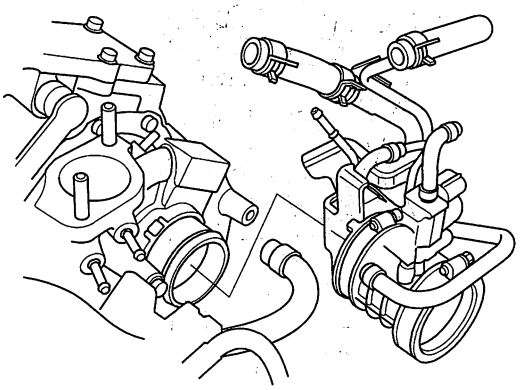

17. Install the water bypass pipe (A) with new gasket (B).

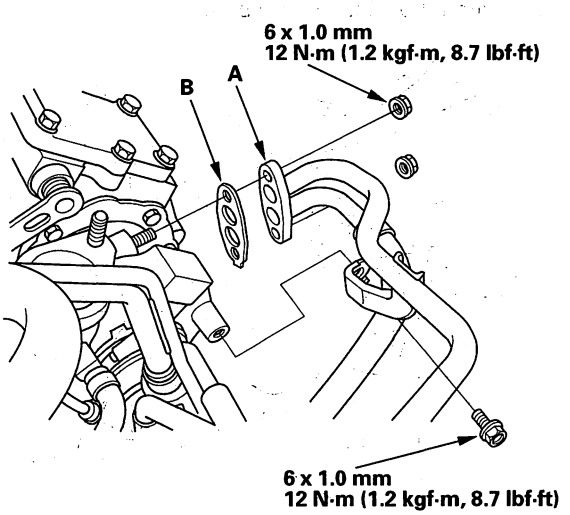


18. Install the water bypass hose (A) and vacuum hoses (B).

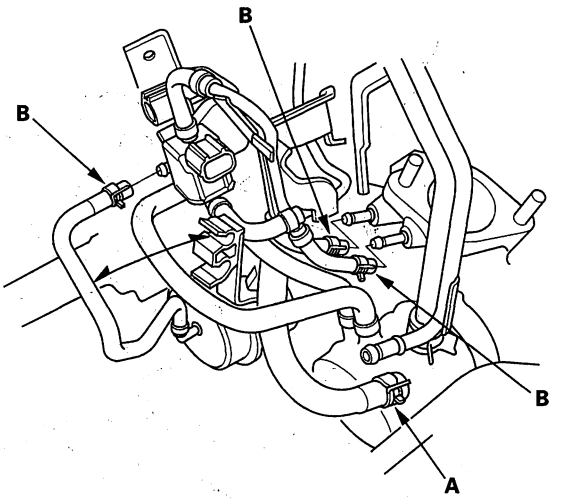


19. Install the charge air cooler bracket.

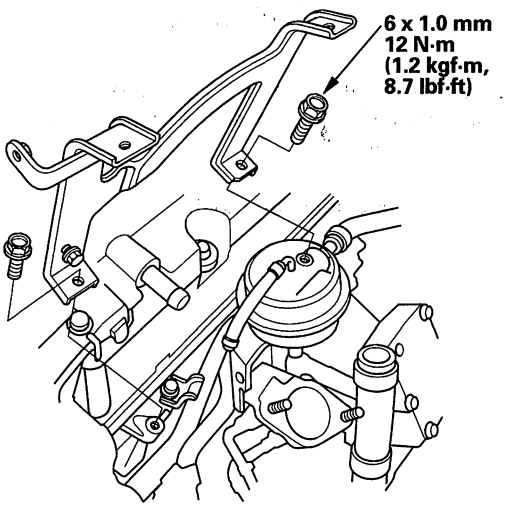

Protected by AR

20. Install the solenoid valve bracket (A) and vacuum hose (B), then install the vacuum line mounting bolt (C).

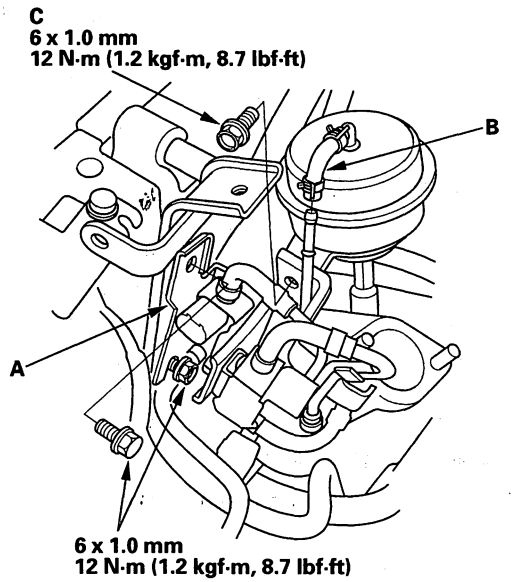


21. Connect the turbocharger wastegate control solenoid valve connector and turbocharger boost control solenoid valve connector.

22. Install the breather hose (A) and water bypass hose (B), then install the water bypass line mounting bolt (C).

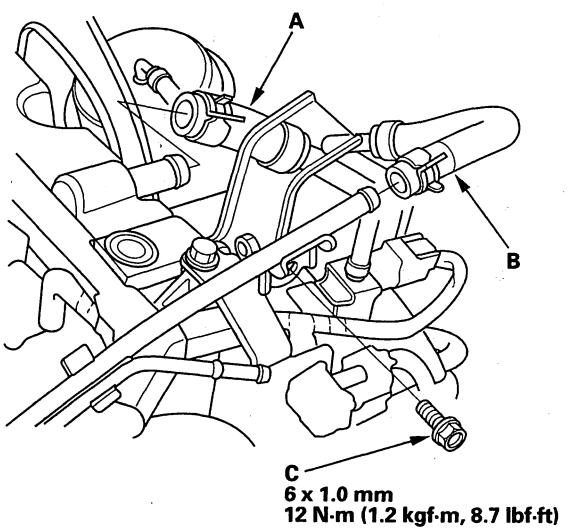


23. Install the intake air ducts (charge air cooler inlet hose/turbocharger outlet pipe assembly) (A) with new gasket (B).

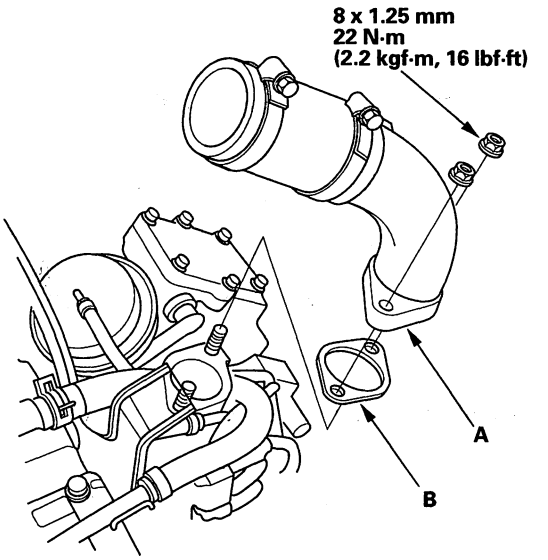


24. Install the intake air duct (turbocharger inlet pipe) (A), then install the evaporative emission (EVAP) canister hose (B).

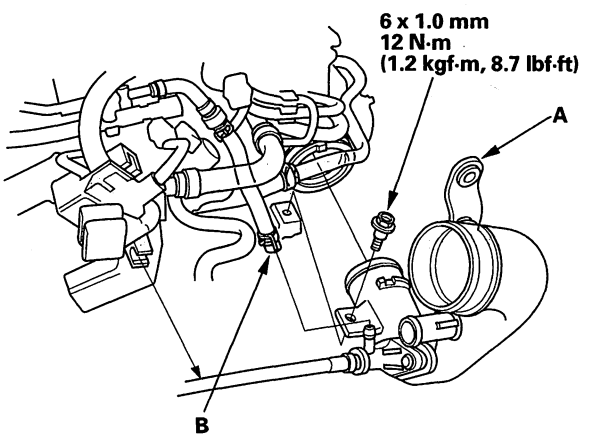


(cont'd)

Protected by AR



## Turbocharger and Exhaust Manifold Removal and Installation (cont'd)

25. Install the air bypass outlet pipe (A).

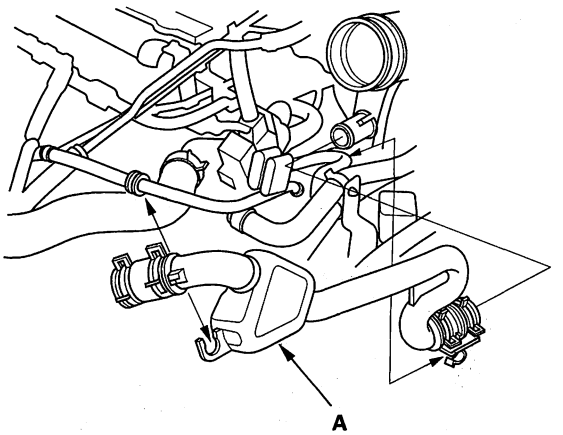


26. Install the heater valve mounting bolt (A).

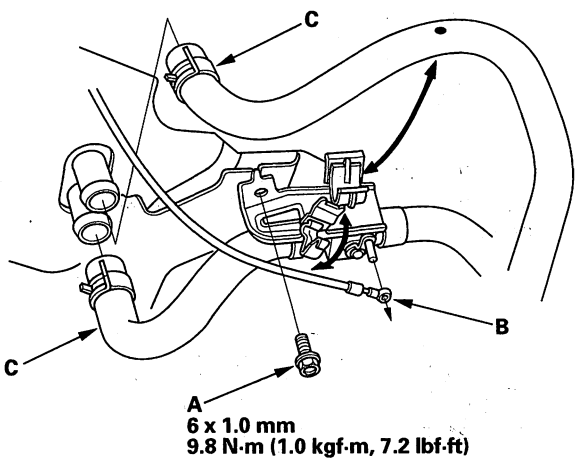


27. Install the heater cable (B), and lock the clamp, then install the heater hoses (C).

28. Install the bracket (A), then install the master cylinder reservoir (B).

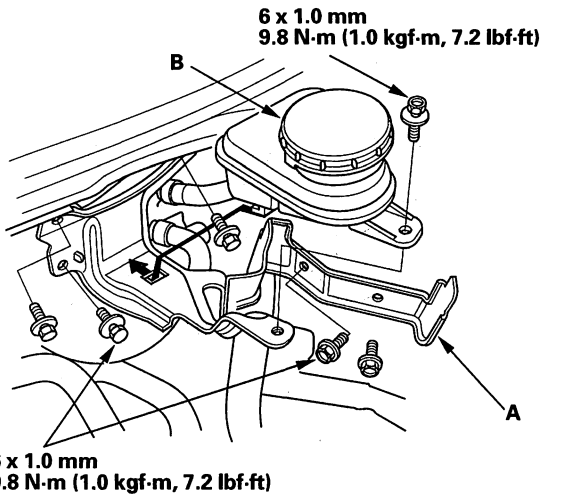


29. Install the under-hood fuse/relay box to the bracket.

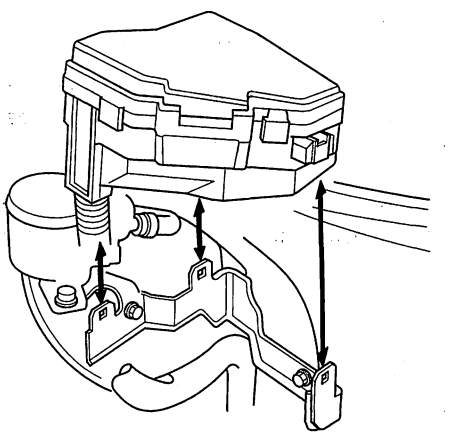

30. Install the warm up catalytic converter (see page 11-440).

31. Install the charge air cooler (see page 9-9).

32. Install the air cleaner housing assembly (see page 11-394).

33. Install the cowl cover and under-cowl panel (see page 20-163).

34. Refill the radiator with engine coolant, and bleed air from the cooling system with the heater valve open (see step 6 on page 10-7).

Protected by AR

## Exhaust Pipe and Muffler Replacement

NOTE: Use new gaskets and self-locking nuts when reassembling.

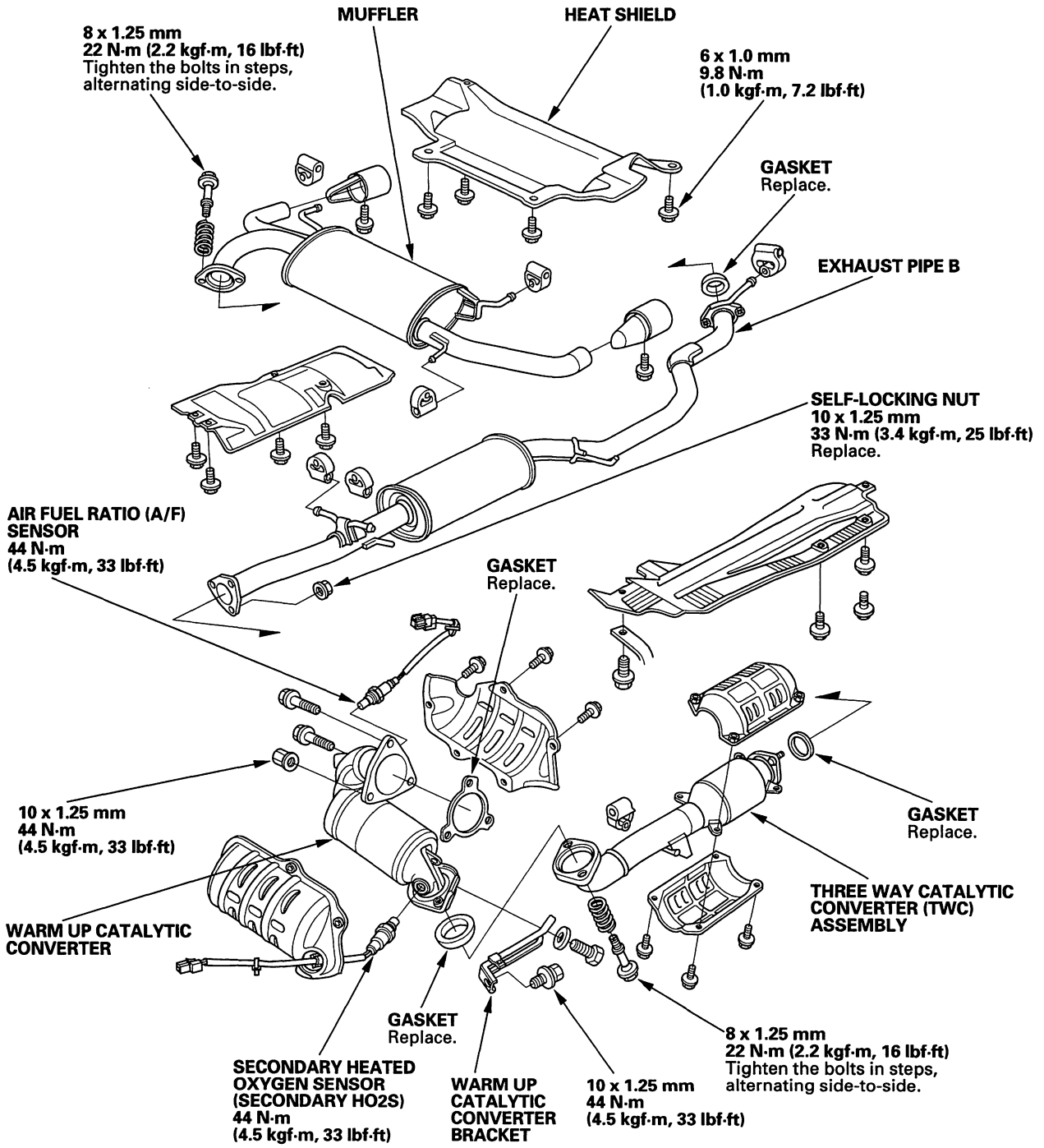

Protected by AR

Protected by AR

# Engine Cooling

## Cooling System

Component Location Index ..... 10-2
Radiator Cap Test ..... 10-3
Radiator Test ..... 10-3
Fan Motor Test ..... 10-4
Thermostat Test ..... 10-4
Water Pump Inspection ..... 10-5
Water Pump Replacement ..... 10-6
Coolant Check ..... 10-7
Coolant Replacement ..... 10-7
Thermostat Replacement ..... 10-9
Water Passage Replacement ..... 10-10
Water Outlet Removal and Installation ..... 10-12
Fan, Fan Motor, Shroud Removal and Installation .... 10-16
Radiator Replacement ..... 10-19

## Fan Controls

Component Location Index ..... 10-22
Symptom Troubleshooting Index ..... 10-23
Circuit Diagram ..... 10-24
Radiator Fan High Speed Circuit Troubleshooting ... 10-25

Protected by AR



## Component Location Index

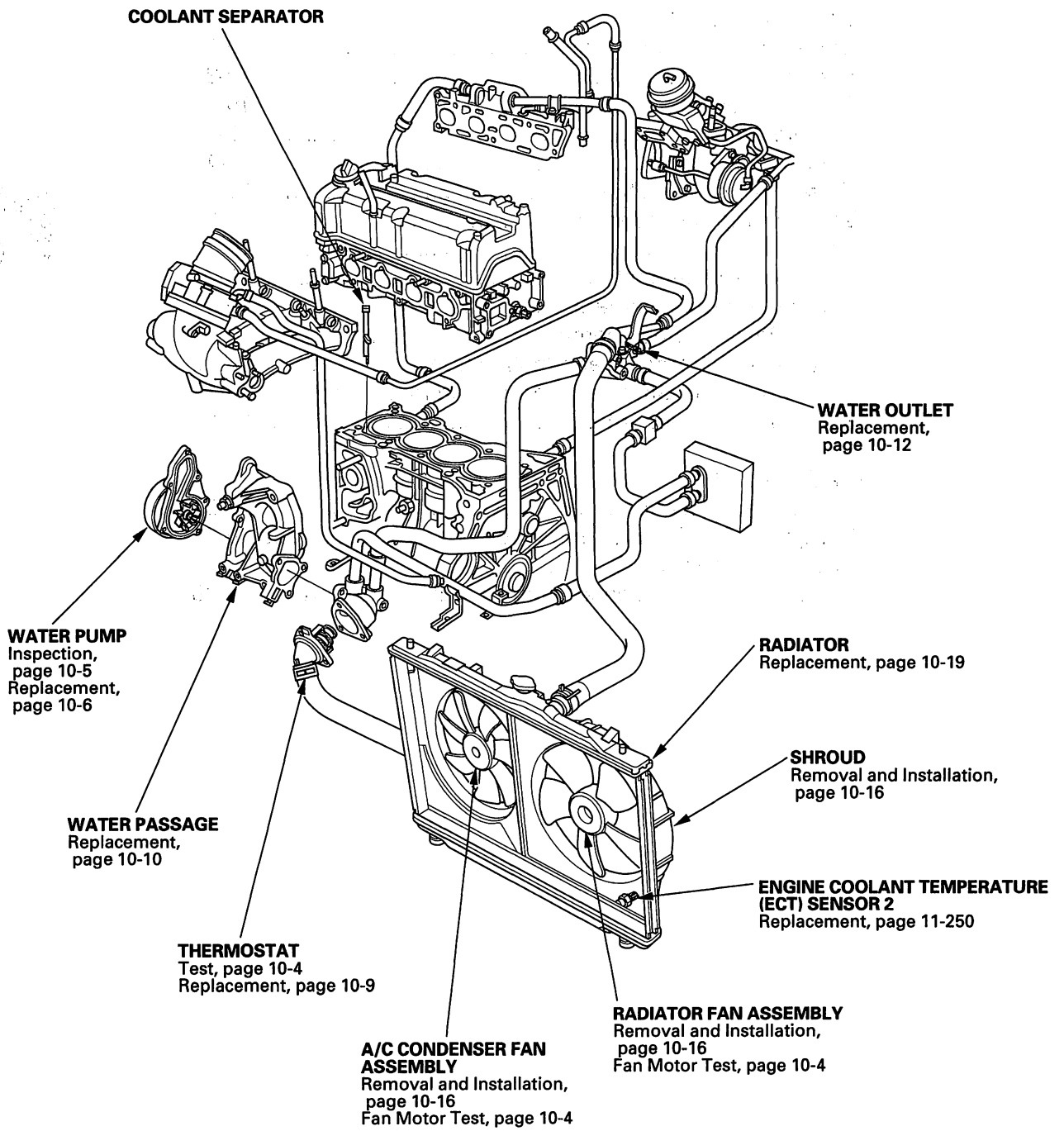




BACK

Protected by AR

## Radiator Cap Test

1. Remove the radiator cap (A). Wet the seal with engine coolant, then install it on a commercially available pressure tester (B).

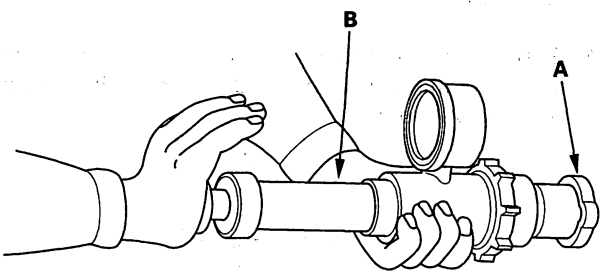


2. Apply a pressure of 93—123 kPa (0.95—1.25 kgf/cm², 14—18 psi).
3. Check for a drop in pressure.
4. If the pressure drops, replace the cap.

## Radiator Test

1. Wait until the engine is cool, then carefully remove the radiator cap, and fill the radiator with engine coolant to the top of the filler neck.
2. Attach a commercially available pressure tester (A) to the radiator, and apply a pressure of 93—123 kPa (0.95—1.25 kgf/cm², 14—18 psi).

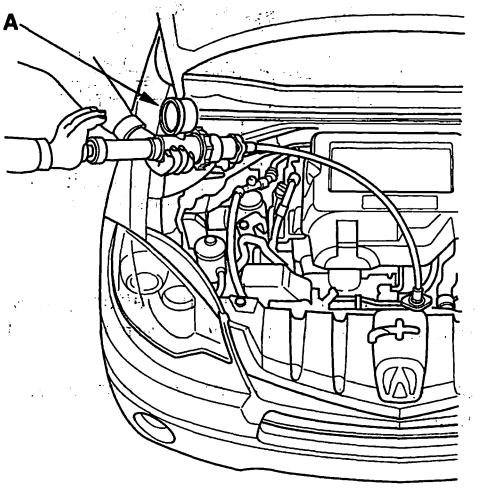


3. Inspect for engine coolant leaks, and a drop in pressure.
4. Remove the tester, then reinstall the radiator cap.

Protected by AR



## Fan Motor Test

1. Disconnect the 2P connectors from the radiator fan motor and condenser fan motor.

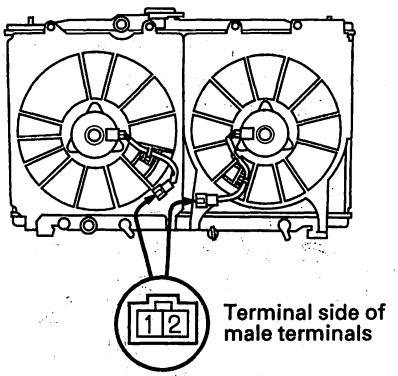


2. Test the motor by connecting battery power to terminal No. 2 and ground to terminal No. 1.

3. If the motor fails to run, or does not run smoothly, replace it.

## Thermostat Test

Replace the thermostat if it is open at room temperature.

To test a closed thermostat:

1. Suspend the thermostat (A) in a container of water. Do not let the thermometer (B) touch the bottom of the hot container.

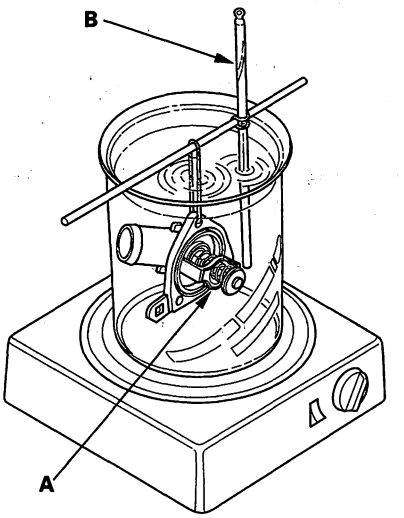


2. Heat the water, and check the temperature with a thermometer. Check the temperature where the thermostat first opens, and where it is fully open.

3. Measure the lift height of the thermostat when it is fully open. If the thermostat is not within the specification, replace it.

**Standard Thermostat**

| | |
|---|---|
| **Lift Height:** | **Above 8.0 mm (0.31 in.)** |
| **Starts Opening:** | **169—176 °F (76—80 °C)** |
| **Fully Open:** | **194 °F (90 °C)** |



BACK

Protected by AR

## Water Pump Inspection

**Special Tools Required**
A/C clutch holder, Robinair 10204 or Kent-Moore J37872, or Honda Tool and Equipment KMT-J33939, commercially available

1. Remove the splash shield (see step 25 on page 5-6).

2. Remove the drive belt (see page 4-31).

3. Hold the water pump pulley using the A/C clutch holder (A), and remove the water pump pulley mounting bolts (B), then remove the water pump pulley.

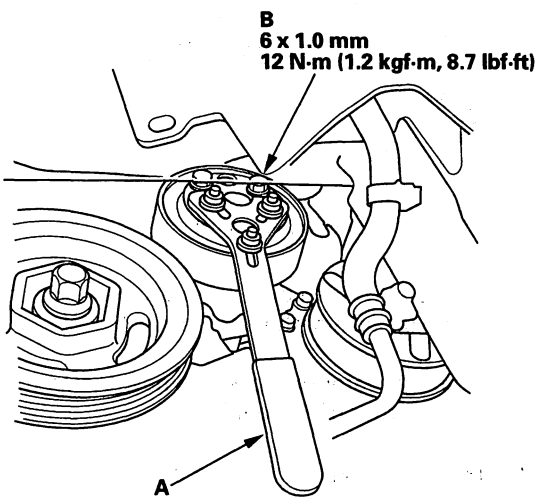


4. Turn the water pump pulley counterclockwise. Check that it turns freely. If it doesn't, replace the water pump (see page 10-6).

   NOTE: When you check the water pump, you may see a small amount of "weeping" from the bleed holes (A). This is normal.

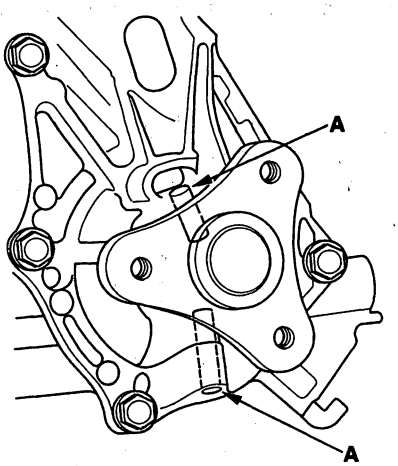


5. Install the water pump pulley.

6. Install the drive belt (see page 4-31).

7. Install the splash shield (see step 30 on page 5-16).

Protected by AR



## Water Pump Replacement

**Special Tools Required**
A/C clutch holder, Robinair 10204 or Kent-Moore J37872, or Honda Tool and Equipment KMT-J33939, commercially available

1. Drain the engine coolant (see page 10-7).
2. Remove the splash shield (see step 25 on page 5-6).
3. Remove the drive belt (see page 4-31).
4. Hold the water pump pulley using the A/C clutch holder (A), and remove the water pump pulley mounting bolts (B), then remove the water pump pulley.

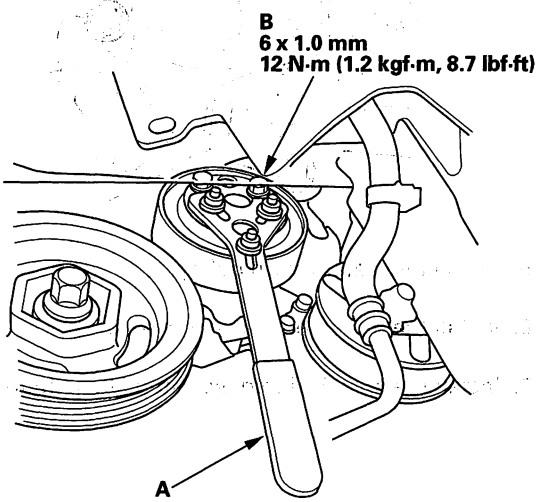


5. Remove the water pump (A) by removing the six bolts.

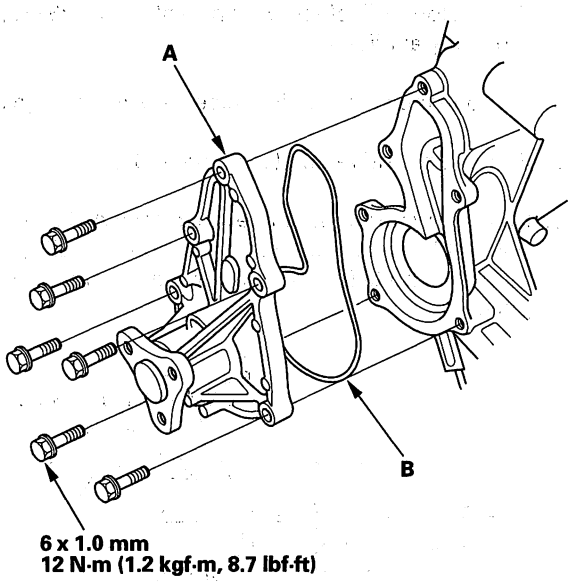


6. Inspect, and clean the O-ring groove and the mating surface of the engine block.
7. Install the water pump with a new O-ring (B) in the reverse order of removal.
8. Clean up any spilled engine coolant.
9. Install the water pump pulley.
10. Install the drive belt (see page 4-31).
11. Install the splash shield (see step 30 on page 5-16).
12. Refill the radiator with engine coolant, then bleed the air from the cooling system (see step 6 on page 10-7).



BACK

Protected by AR

## Coolant Check

1. Look at the coolant level in the coolant reservoir. Make sure it is between the MAX mark (A) and MIN mark (B).

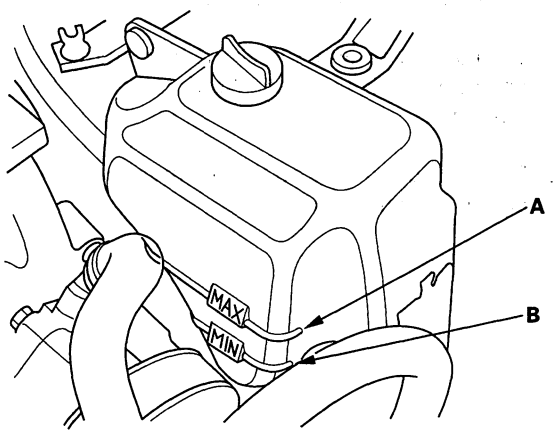


2. If the coolant level in the coolant reservoir is at or below the MIN mark, add coolant to bring it up to the MAX mark, and inspect the cooling system for leaks.

## Coolant Replacement

1. Start the engine. Set the heater temperature control dial to maximum heat, then turn off the ignition switch. Make sure the engine and radiator are cool to the touch.

2. Remove the radiator cap.

3. Loosen the drain plug (A), and drain the coolant.

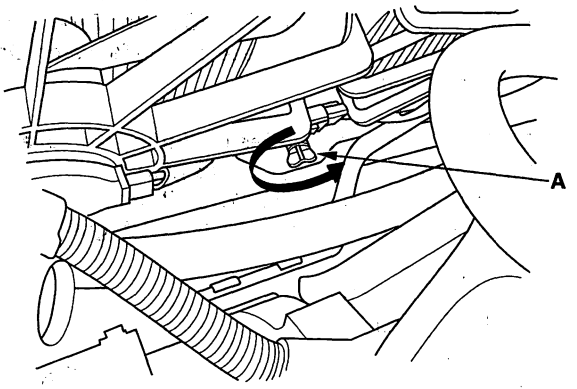


4. After the coolant has drained, tighten the radiator drain plug.

5. Remove the coolant reservoir, and drain the coolant. Reinstall the coolant reservoir.

6. Fill the coolant reservoir to the MAX mark (A) with Honda Long Life Antifreeze/Coolant Type 2 (P/N OL999-9001).

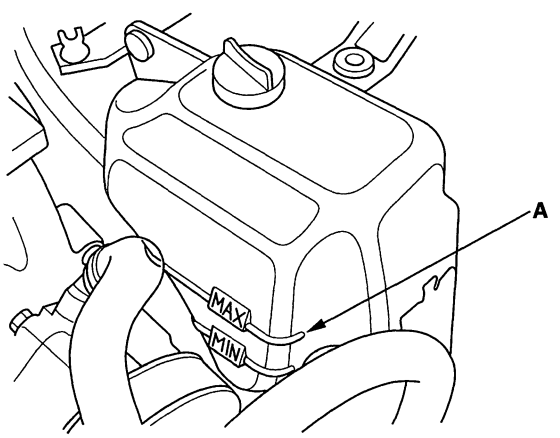


(cont'd)

Protected by AR



## Coolant Replacement (cont'd)

7. Pour Honda Long Life Antifreeze/Coolant Type 2 (P/N OL999-9001) into the radiator up to the base of the filler neck.

   NOTE:
   - Always use Honda Long Life Antifreeze/Coolant Type 2 (P/N OL999-9001). Using a non-Honda coolant can result in corrosion, causing the cooling system to malfunction or fail.
   - Honda Long Life Antifreeze/Coolant Type 2 is a mixture of 50 % antifreeze and 50 % water. Do not add water.

   **Engine Coolant Capacities (Including the reserve tank capacity of 0.7 L (0.18 US gal))**
   **At Coolant Change: 6.5 L (1.72 US gal)**
   **After Engine Overhaul: 8.4 L (2.22 US gal)**

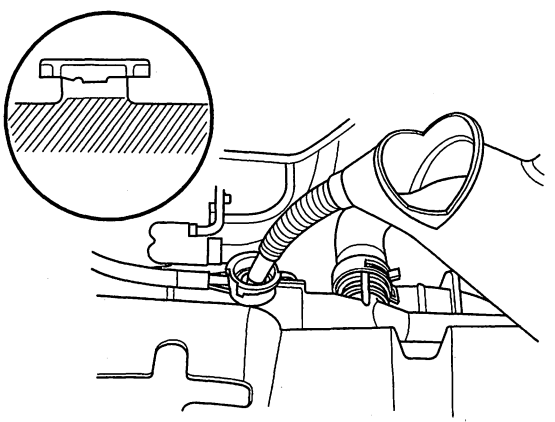

8. Loosely install the radiator cap.

9. Start the engine, and let it run until it warms up (the radiator fan comes on at least twice).

10. Turn off the engine. Check the level in the radiator and add Honda Long Life Antifreeze/Coolant Type 2 if needed.

11. Put the radiator cap on tightly, then run the engine again, and check for leaks.



BACK

Protected by AR

## Thermostat Replacement

1. Drain the engine coolant (see page 10-7).
2. Remove the condenser fan shroud (see page 10-16).
3. Remove the lower hose, then remove the thermostat.

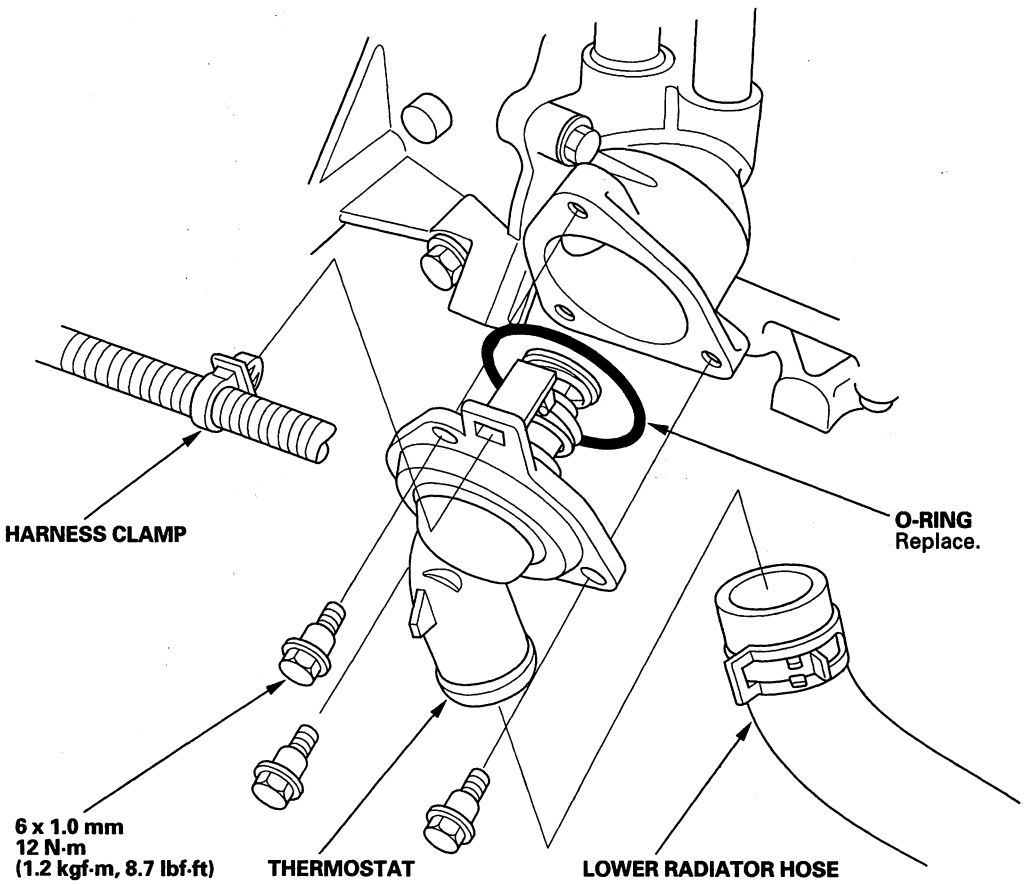


4. Install the thermostat with a new O-ring, then install the lower hose.
5. Install the condenser fan shroud (see page 10-17).
6. Refill the radiator with engine coolant, and bleed the air from the cooling system with the heater valve open (see step 6 on page 10-7).

Protected by AR



## Water Passage Replacement

1. Drain the engine coolant (see page 10-7).
2. Remove the intake manifold (see page 9-3).
3. Remove the drive belt auto-tensioner (see page 4-33).
4. Remove the alternator (see page 4-34).
5. Remove the condenser fan shroud assembly.
6. Remove the A/C compressor without disconnecting the A/C hoses (see step 38 on page 5-7).
7. Remove the bolt (A) securing the connecting pipe.

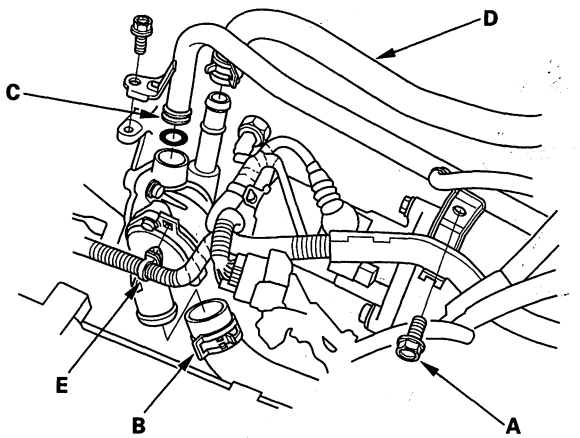


8. Remove the lower radiator hose (B), connecting pipe (C), water bypass hose (D), and harness clamp (E).
9. Remove the water passage.

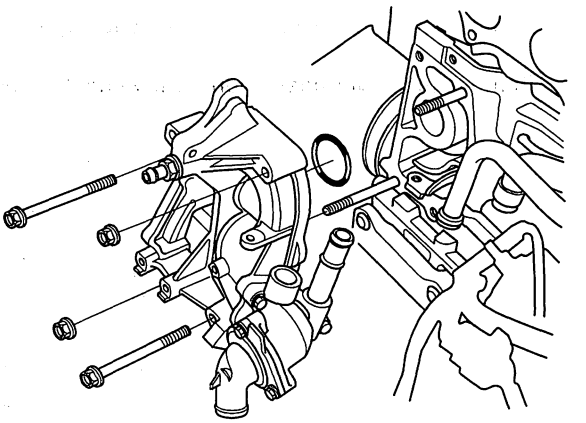

10. Remove the thermostat housing.

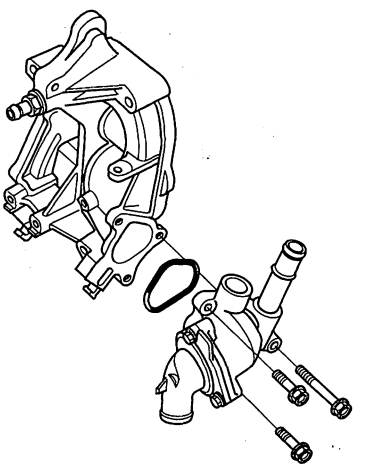

11. Remove the water pump (see page 10-6).



BACK

Protected by AR

12. Install the water pump (see page 10-6).

13. Install the thermostat housing (A) with a new O-ring (B).

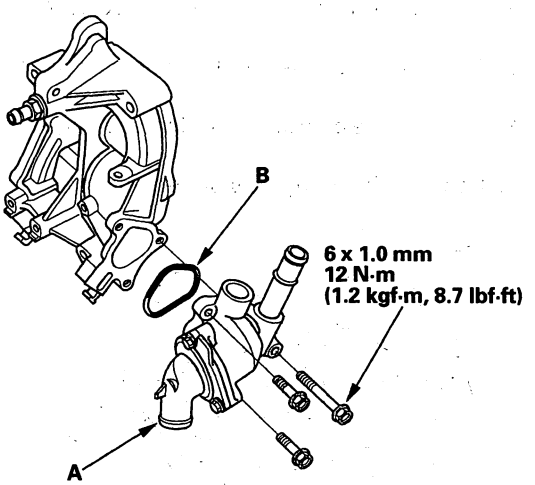


14. Clean, and dry the water passage mating surfaces.

15. Apply liquid gasket, P/N 08717-0004, 08718-0001, 08718-0003, or 08718-0009, evenly to the engine block mating surface of the water passage. Install the component within 5 minutes of applying the liquid gasket.

NOTE:
- If you apply liquid gasket P/N 08718-0012, the component must be install within 4 minutes.
- If too much time has passed after applying the liquid gasket, remove the old liquid gasket and residue, then reapply new liquid gasket.

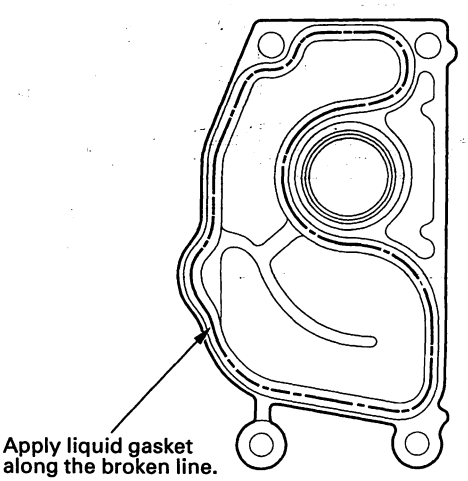


16. Install the water passage (A) with a new O-ring (B).

NOTE:
- Wait at least 30 minutes before filling the engine with oil.
- Do not run the engine for at least 3 hours after installing the water passage.

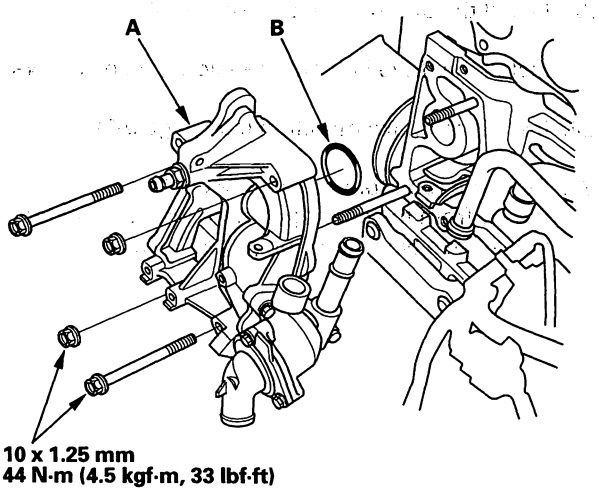


17. Install the connecting pipe (A) with a new O-ring (B), then tighten the bolt (C).

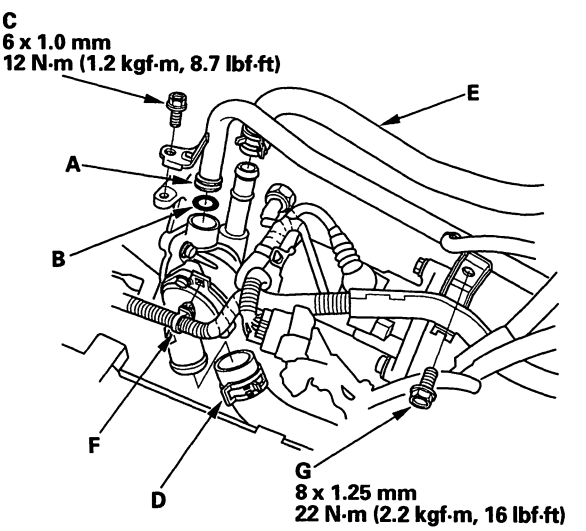


18. Install the lower radiator hose (D), water bypass hose (E), and harness clamp (F).

19. Tighten the bolt (G) securing the connecting pipe.

(cont'd)

Protected by AR



## Water Passage Replacement (cont'd)

20. Install the A/C compressor (see step 36 on page 5-16).
21. Install the condenser fan shroud assembly.
22. Install the alternator (see page 4-35).
23. Install the drive belt auto-tensioner (see page 4-33).
24. Install the intake manifold (see page 9-5).
25. Refill the radiator with engine coolant, and bleed the air from the cooling system with the heater valve open (see step 6 on page 10-7).

## Water Outlet Removal and Installation

### Removal

1. Drain the engine coolant (see page 10-7).
2. Remove the air cleaner housing (see page 11-394).
3. Remove the charge air cooler (see page 9-8).
4. Remove the air bypass outlet pipe (A).

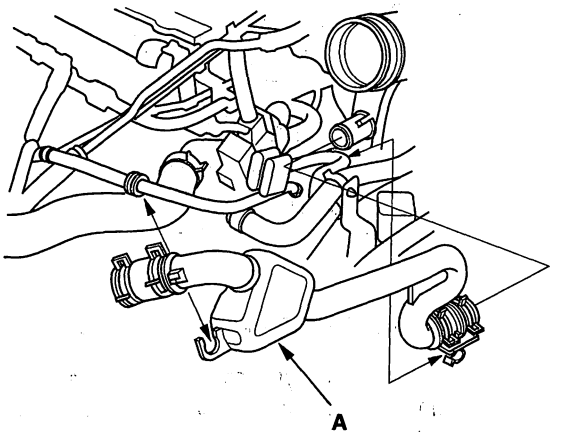


5. Remove the ignition coil cover (A) and fuel feed pipe mounting bolt (B).

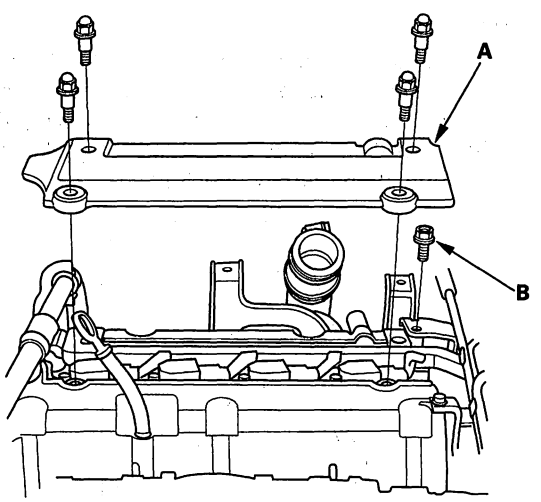




BACK

Protected by AR

6. Remove the engine wire harness connectors and wire harness clamps from the cylinder head.

   - Camshaft position (CMP) sensor A (Intake) connector
   - Camshaft position (CMP) sensor B (Exhaust) connector
   - EVAP canister purge valve connector

7. Remove the harness holder from the bracket.

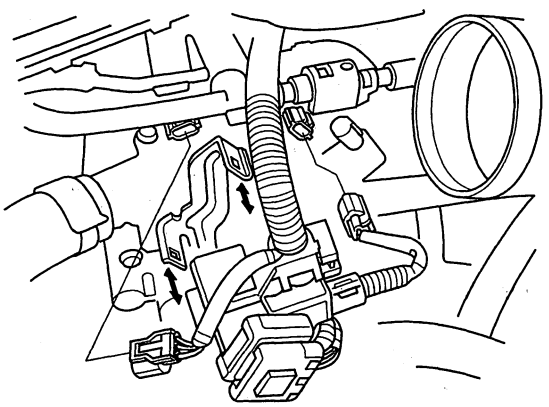

8. Remove the EVAP canister purge valve mounting bracket from the cylinder head.

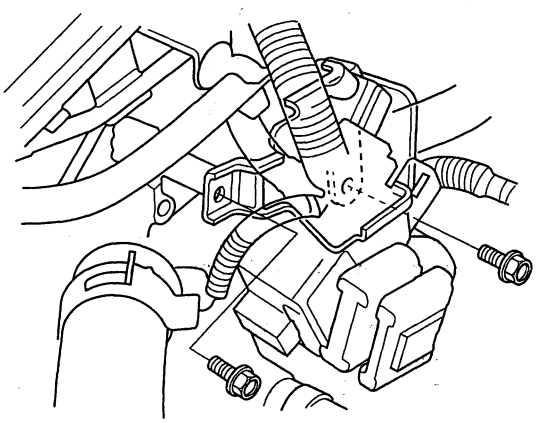

9. Remove the harness holder bracket (A), upper radiator hose (B), and water bypass hose (C), then remove the upper water outlet (D).

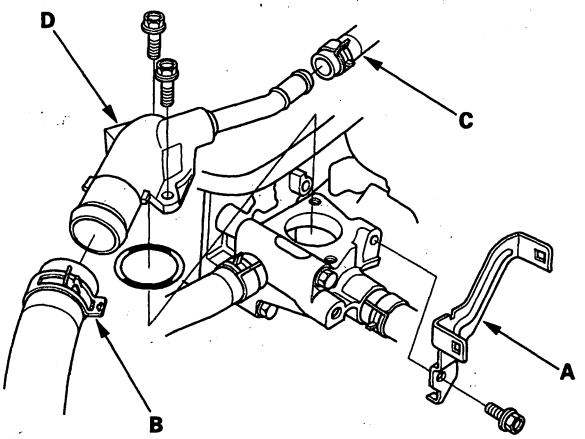


10. Remove the heater hose (A) and water bypass hoses (B), then remove the lower water outlet (C).

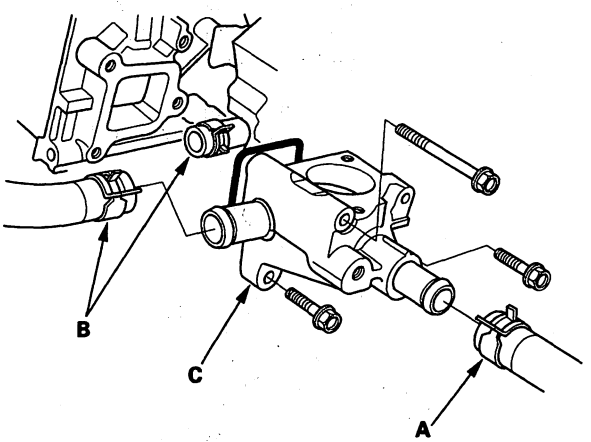


(cont'd)

Protected by AR



## Water Outlet Removal and Installation (cont'd)

### Installation

1. Install the lower water outlet (A) with a new O-ring (B), then install the water bypass hoses (C) and heater hose (D).

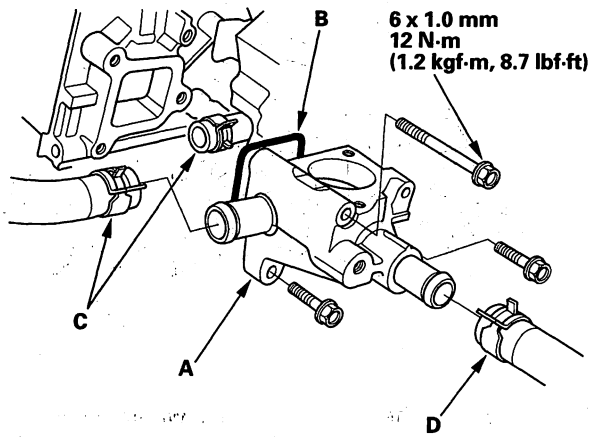


2. Install the upper water outlet (A) with a new O-ring (B), then install the upper radiator hose (C), water bypass hose (D), and harness holder bracket (E).

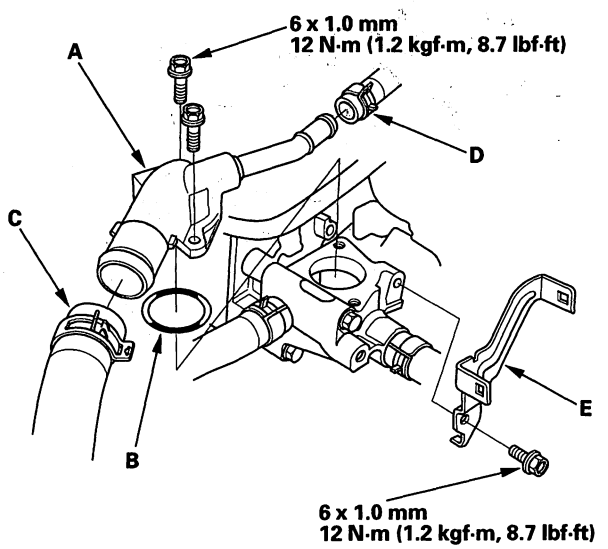


3. Install the EVAP canister purge valve mounting bracket.

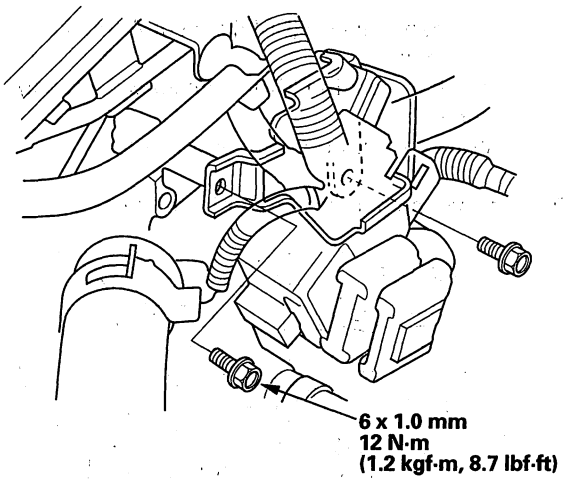


4. Install the harness holder.

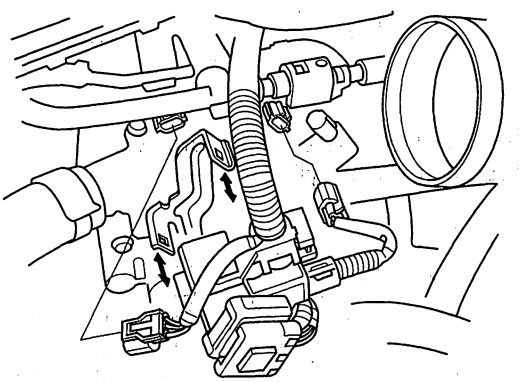

5. Install the engine wire harness connectors and wire harness clamps to the cylinder head.

   - Camshaft position (CMP) sensor A (Intake) connector
   - Camshaft position (CMP) sensor B (Exhaust) connector
   - EVAP canister purge valve connector



BACK

Protected by AR

6. Install the ignition coil cover (A) and fuel feed pipe mounting bolt (B).

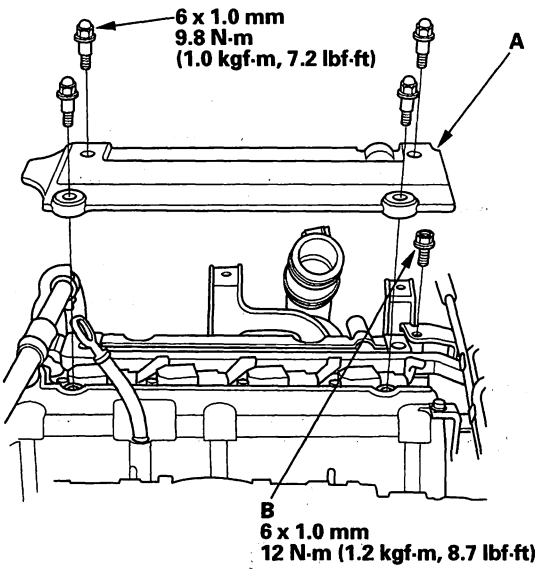


7. Install the air bypass outlet pipe.

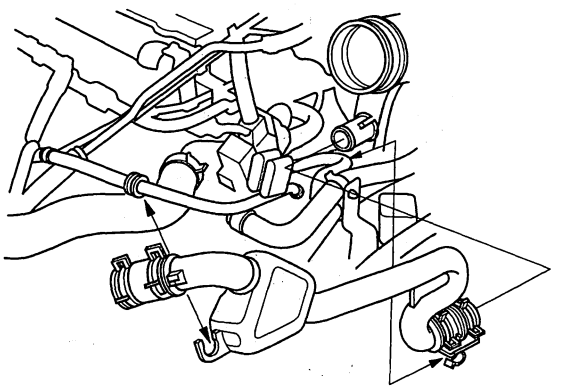

8. Install the charge air cooler (see page 9-9).

9. Install the air cleaner housing (see page 11-394).

10. Refill the radiator with engine coolant, and bleed the air from the cooling system with the heater valve open (see step 6 on page 10-7).

Protected by AR



## Fan, Fan Motor, Shroud Removal and Installation

### Removal

1. Remove the splash shield (see step 25 on page 5-6).

2. Disconnect the fan motor connectors (A), and remove the harness clamps (B).

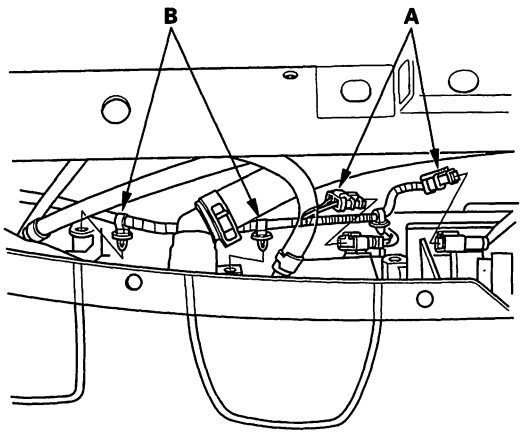


3. Remove the clip (A), then remove the coolant reservoir (B) from the holder.

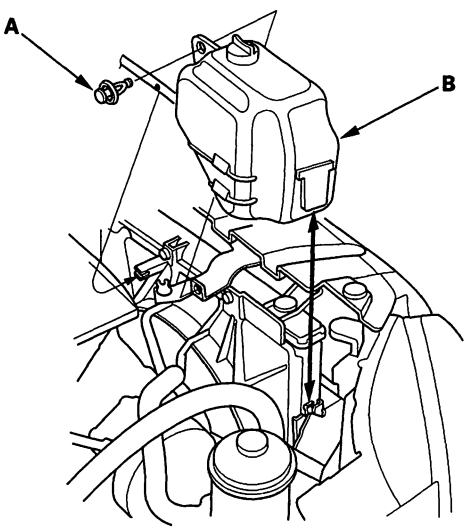


4. Remove the clips (A), then remove the support rod clamp bracket (B).

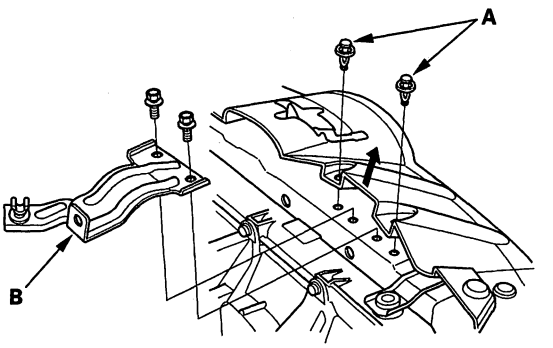


5. Remove the condenser fan shroud assembly (A), then remove the radiator fan shroud assembly (B) from the condenser fan shroud side.

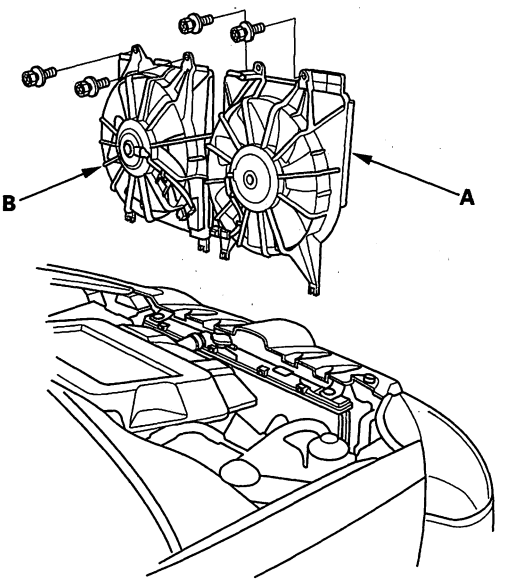




BACK

Protected by AR

6. Disassemble the fan shrouds.

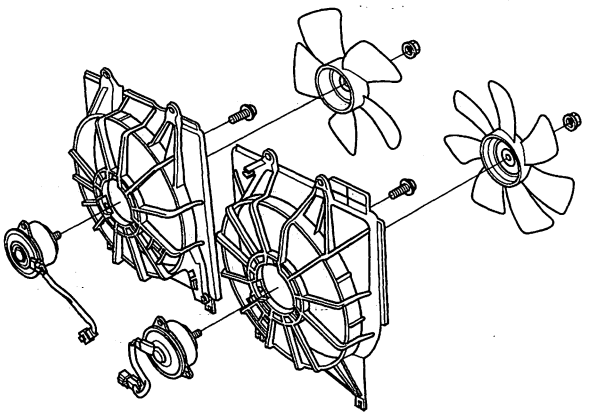

## Installation

1. Assemble the fan shrouds.

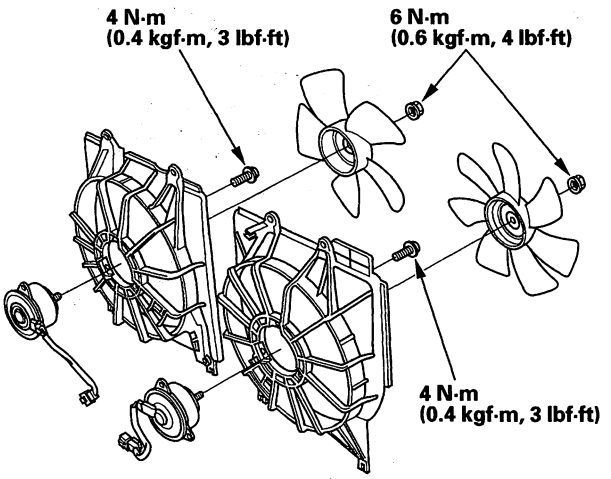


2. Install the radiator fan shroud assembly (A), then install the condenser fan shroud assembly (B).

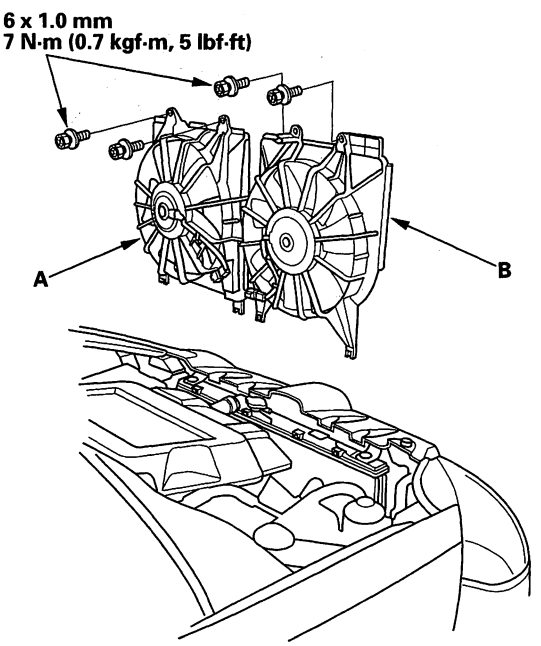


(cont'd)

Protected by AR



## Fan, Fan Motor, Shroud Removal and Installation (cont'd)

3. Install the support rod clamp bracket (A), then install the clips (B).

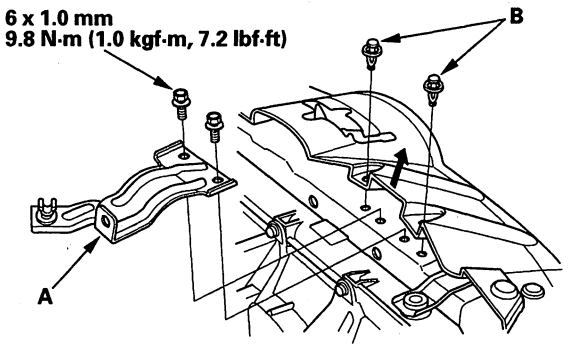


4. Install the coolant reservoir.

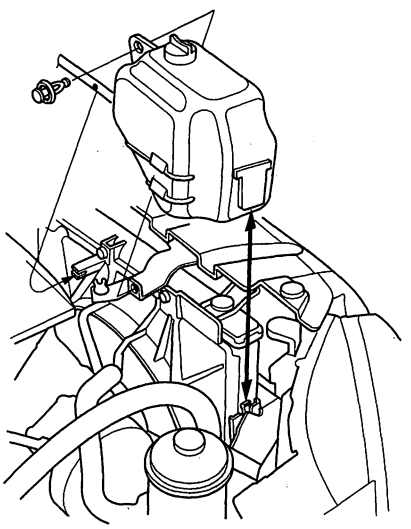

5. Connect the fan motor connectors (A), and install the harness clamps (B).

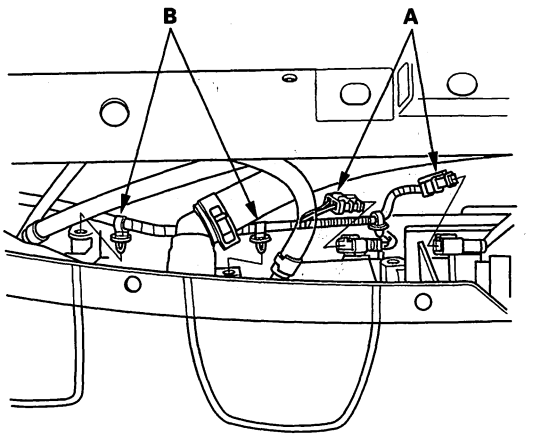


6. Install the splash shield (see step 30 on page 5-16).



BACK

Protected by AR

## Radiator Replacement

1. Drain the engine coolant (see page 10-7).

2. Remove the condenser fan shroud assembly and radiator fan shroud assembly (see page 10-16).

3. Remove the upper radiator hose (A).

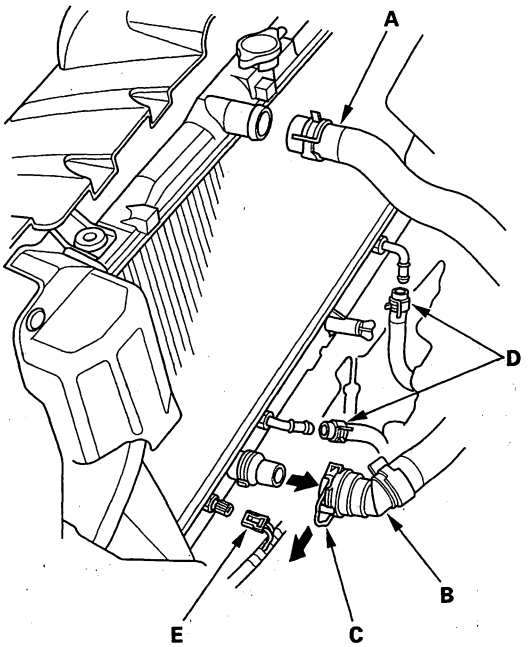


4. Clean any dirt off the quick connector (B), radiator, and lower radiator hose.

5. Pull out the lock (C) by hand, then wiggle the quick connector loose, and remove it from the radiator. Do not use any tools to remove the quick connector.

6. Remove the automatic transmission fluid (ATF) cooler hoses (D), then plug the hose and the line.

7. Disconnect the engine coolant temperature (ECT) sensor 2 connector (E).

8. Remove the intake air duct cover (A) and the four clips (B), then remove the upper radiator brackets (C).

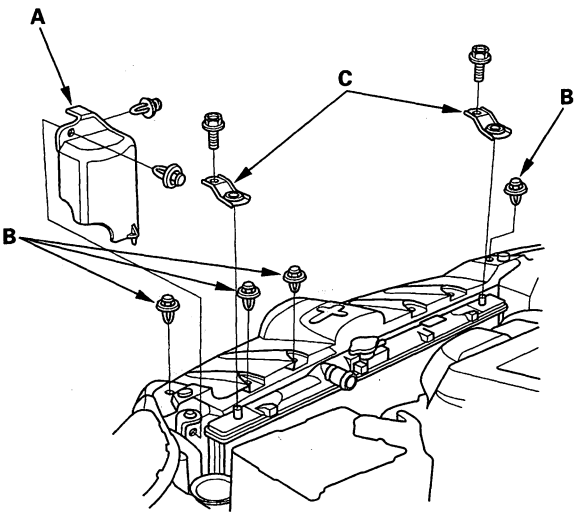


9. Pull up the radiator, then remove the radiator cap (A), ECT sensor 2 (B), and drain plug (C).

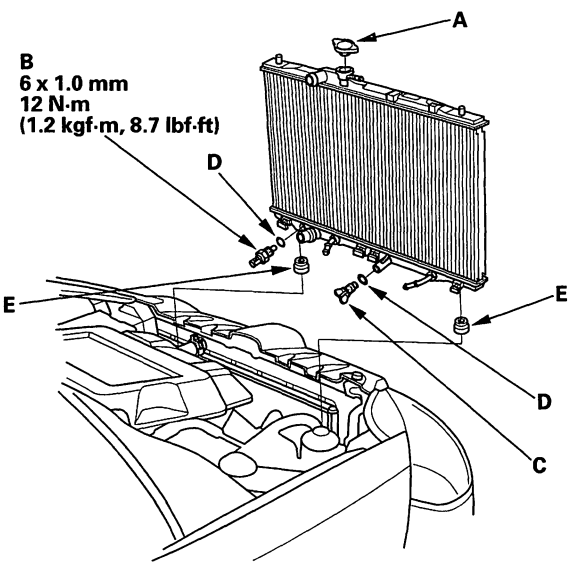


10. Reassemble the radiator with new O-rings (D).

11. Install the radiator. Make sure the lower cushions (E) are set securely.

(cont'd)

Protected by AR



## Radiator Replacement (cont'd)

12. Install the upper radiator brackets (A), then install the intake air duct cover (B) and the four clips (C).

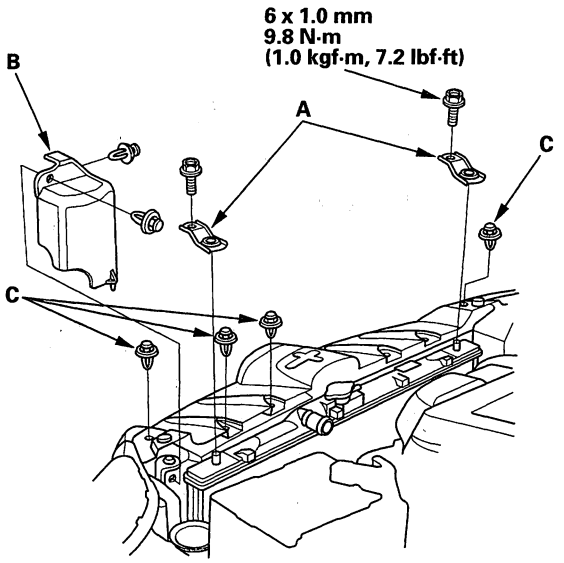


13. Check the quick connector (A) and set ring (B) for cracks or damage. If the connector and/or set ring are cracked or damaged, replace the connector.

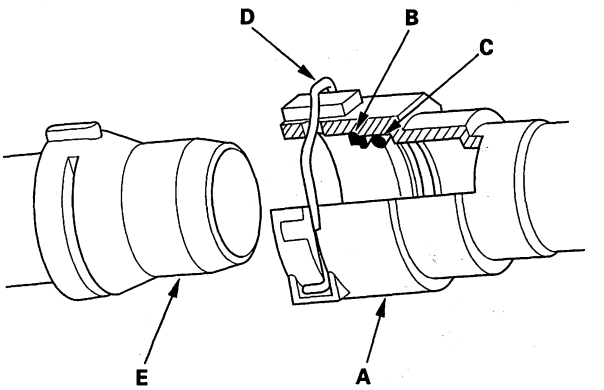


14. Make sure the set ring is in place inside the quick connector. If the set ring is displaced or not properly seated in the connector, replace the quick connector.

15. Replace the O-ring (C) in the quick connector.

16. Check the lock (D). If the lock is damaged or deformed, replace it. When installing the new lock to the connector, slide it straight down along the groove.

17. Install a new lower radiator hose on the quick connector, and install the clamp.

18. Clean the connecting surface of the radiator (E), then apply clean engine coolant around the connecting surface.



BACK

Protected by AR

19. Push down the lock (A), then push the quick connector (B) onto the radiator until you hear it click.

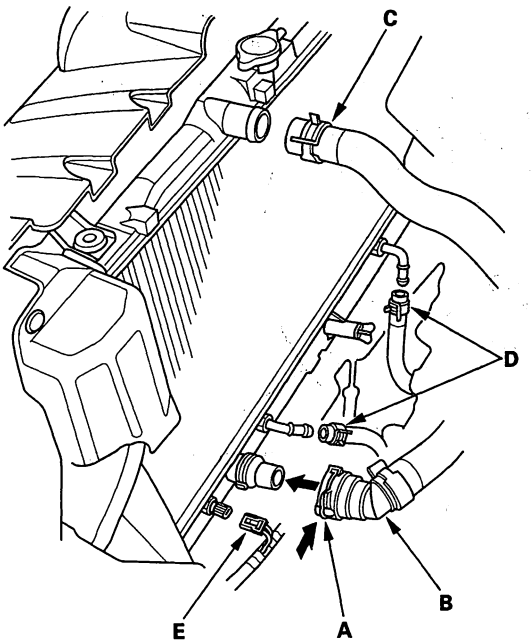


20. Install the upper radiator hose (C).

21. Install the ATF cooler hoses (D), and connect the ECT sensor 2 connector (E).

22. Install the condenser fan shroud assembly and radiator fan shroud assembly (see page 10-17).

23. Refill the radiator with engine coolant, and bleed the air from the cooling system with the heater valve open (see step 6 on page 10-7).

Protected by AR



## Component Location Index

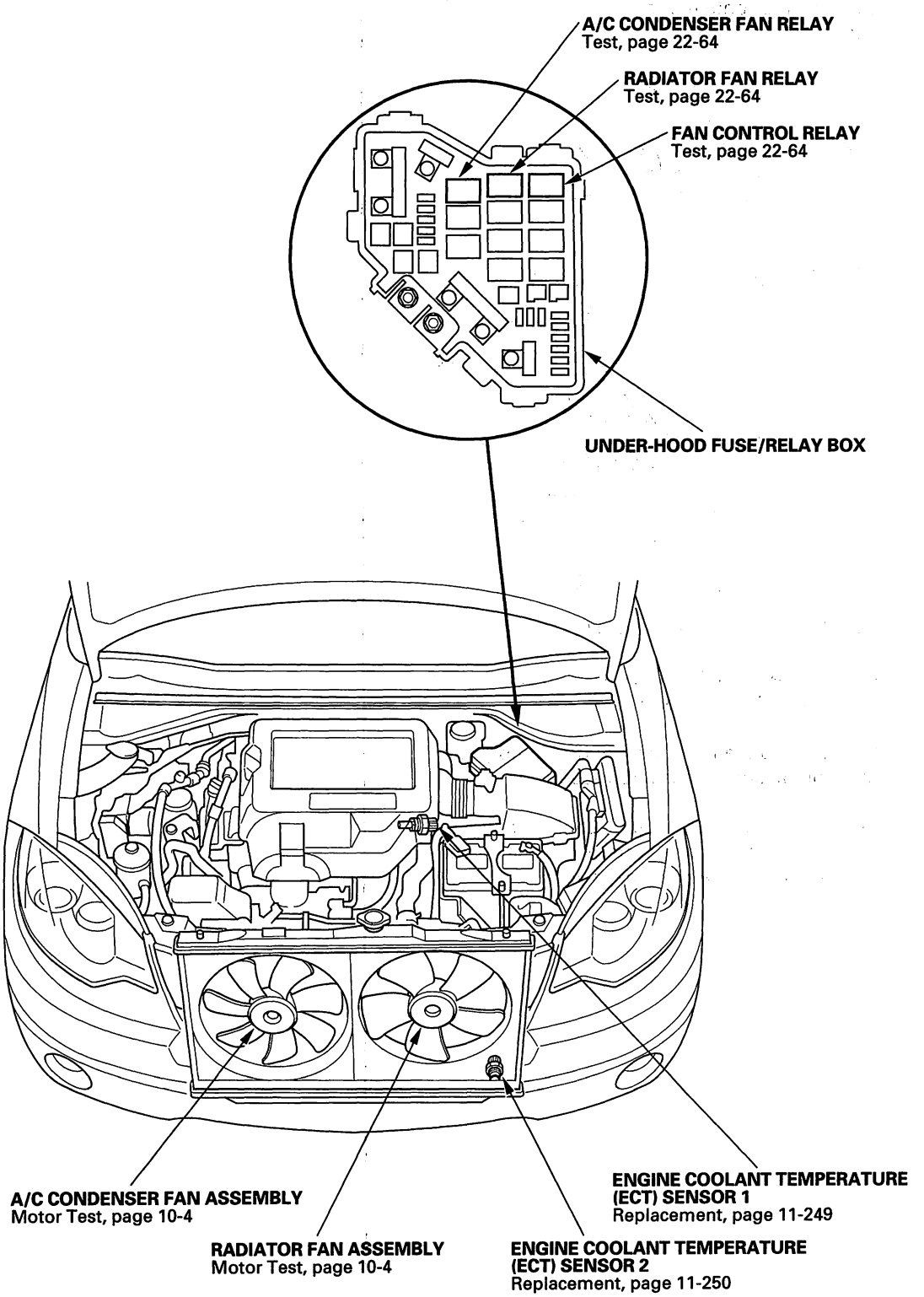




BACK

Protected by AR

## Symptom Troubleshooting Index

| Symptom | Diagnostic Procedure | Also check for |
|---|---|---|
| Engine overheats | 1. Check the coolant level.<br>2. Check for any engine coolant leakage (from gaskets, hoses, O-rings, etc.).<br>3. Check for dirt, leaves, or insects on radiator and condenser.<br>4. Check for deteriorated coolant.<br>5. Check for a damaged or deformed fan shroud.<br>6. Inspect the fan motors (see page 10-4) or fan relays (see page 22-64).<br>7. Check the radiator cap (see page 10-3).<br>8. Check the thermostat (see page 10-4).<br>9. Inspect the water pump (see page 10-5).<br>10. Check for a plugged or deteriorated radiator hoses.<br>11. Check for plugged heater core or hoses.<br>12. Check for a damaged cylinder head gasket. | |
| The radiator fan runs at low speed, but it does not run at high speed when the engine coolant temperature is above 199 °F (93 °C) | Radiator fan high speed circuit troubleshooting (see page 10-25). | Cleanliness and tightness of all connectors |
| With the A/C off and the engine coolant temperature at 199 °F (93 °C) or below, the A/C condenser fan runs at high speed and the radiator fan does not run. When the engine coolant temperature is above 199 °F (93 °C), both fans run at high speed | Remove the fan control relay, and test.<br>• If the relay is faulty, replace it.<br>• If the relay is OK, check for a short in the wire between fan control relay 5P socket terminal No. 1 and condenser fan motor 2P connector terminal No. 1. | Cleanliness and tightness of all connectors |
| The radiator fan and the A/C condenser fan run at high speed with the ignition switch ON (II), the A/C off, and the engine coolant temperature below 194 °F (90 °C) | Check for a short in the wire between radiator fan relay 4P socket terminal No. 3 and PCM connector terminal A5. | Cleanliness and tightness of all connectors |
| Both the radiator fan and the A/C condenser fan run at low speed with the ignition switch ON (II) and the A/C off | Check for a short in the wire between A/C condenser fan relay 4P socket terminal No. 4 and PCM connector terminal A4. | Cleanliness and tightness of all connectors |
| Both the radiator fan and the A/C condenser fan do not run at low speed with the A/C on | Radiator and A/C condenser fans low speed circuit troubleshooting (see page 21-65). | Cleanliness and tightness of all connectors |
| The A/C condenser fan does not run at all. The radiator fan does not run at low speed, but it runs at high speed | A/C condenser fans high speed circuit troubleshooting (see page 21-70). | Cleanliness and tightness of all connectors |
| Both the radiator fan and the A/C condenser fan do not run at high speed when the engine coolant temperature is above 199 °F (93 °C) | Check for an open in the wire between radiator fan relay 4P socket terminal No. 3 and PCM connector terminal A5. | Cleanliness and tightness of all connectors |

Protected by AR

# Fan Controls

## Circuit Diagram

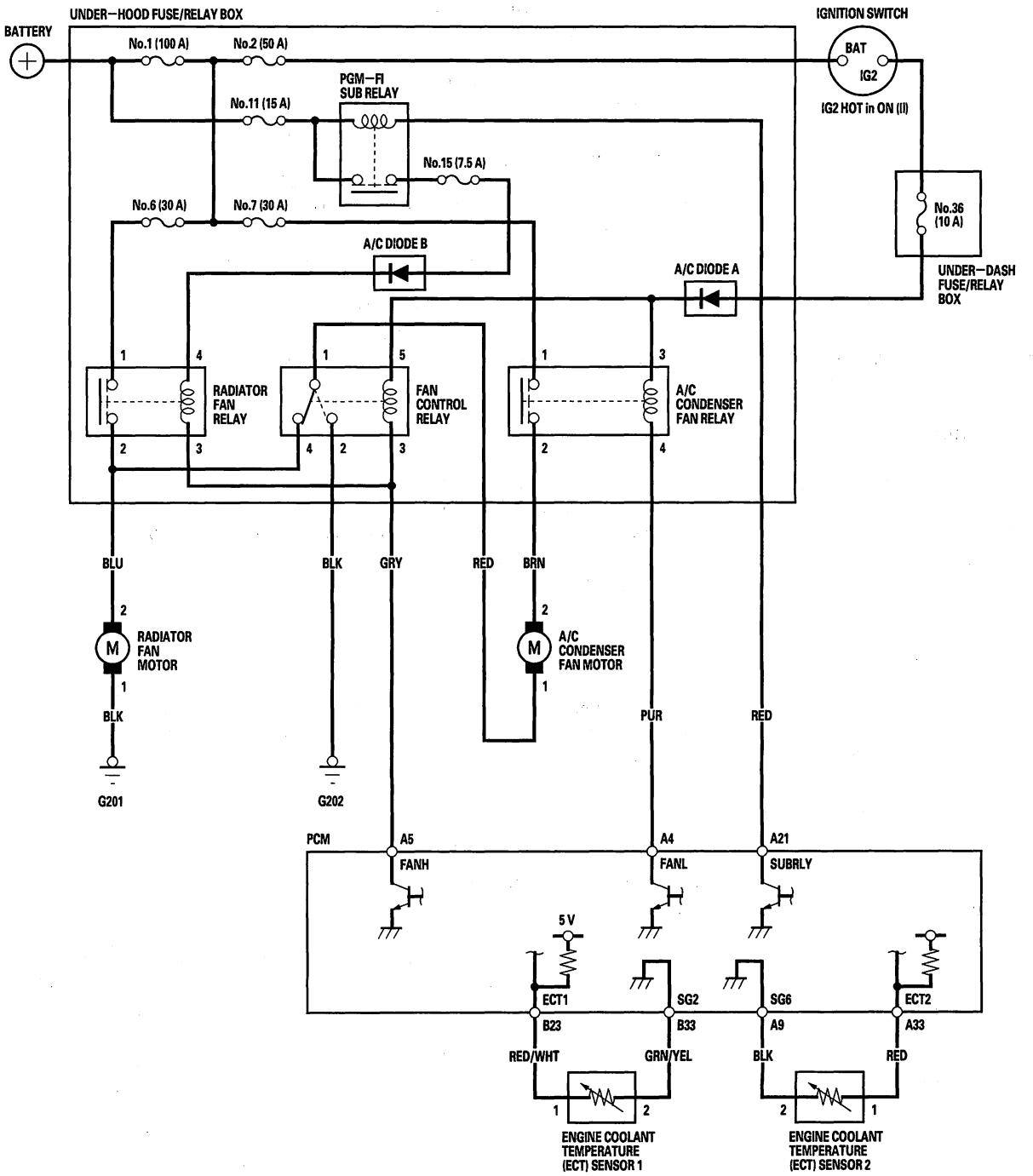




BACK

Protected by AR

## Radiator Fan High Speed Circuit Troubleshooting

1. Check the No. 6 (30 A) fuse in the under-hood fuse/relay box, and the No. 15 (7.5 A) fuse in the under-hood fuse/relay box.

   *Are the fuses OK?*

   **YES**—Go to step 2.

   **NO**—Replace the fuse(s) and recheck.■

2. Remove the radiator fan relay from the under-hood fuse/relay box and test it (see page 22-64).

   *Is the relay OK?*

   **YES**—Go to step 3.

   **NO**—Replace the radiator fan relay.■

3. Measure the voltage between radiator fan relay 4P socket terminal No. 1 and body ground.

**RADIATOR FAN RELAY 4P SOCKET**

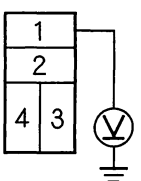


Terminal side of female terminals

*Is there battery voltage?*

**YES**—Go to step 4.

**NO**—Replace the under-hood fuse/relay box.■

4. Connect radiator fan relay 4P socket terminals No. 1 and No. 2 with a jumper wire.

**RADIATOR FAN RELAY 4P SOCKET**

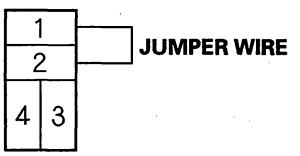


Terminal side of female terminals

*Does the radiator fan run at high speed?*

**YES**—Go to step 5.

**NO**—Repair open in the wire between radiator fan relay 4P socket terminal No. 2 and radiator fan motor 2P connector terminal No. 2.■

5. Turn the ignition switch ON (II).

6. Measure the voltage between radiator fan relay 4P socket terminal No. 4 and body ground.

**RADIATOR FAN RELAY 4P SOCKET**

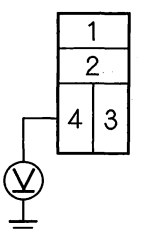


Terminal side of female terminals

*Is there battery voltage?*

**YES**—Repair open in the wire between radiator fan relay 4P socket terminal No. 3 and the powertrain control module (PCM) (A5).■

**NO**—Check the A/C diode B in the under-hood fuse/relay box. If the diode is OK, replace the under-hood fuse/relay box.■

BACK

Protected by AR

# Fuel and Emissions

## Fuel and Emissions Systems


Special Tools ..... 11-2
General Troubleshooting Information ..... 11-3
DTC Troubleshooting Index ..... 11-10
Symptom Troubleshooting Index ..... 11-14
System Description ..... 11-17
How to Set Readiness Codes ..... 11-76


## PGM-FI System


Component Location Index ..... 11-79
DTC Troubleshooting ..... 11-81
F-CAN Circuit Troubleshooting ..... 11-213
MIL Circuit Troubleshooting ..... 11-228
DLC Circuit Troubleshooting ..... 11-229
Injector Replacement ..... 11-243
A/F Sensor Replacement ..... 11-245
Secondary HO2S Replacement ..... 11-245
CMP Sensor B Replacement ..... 11-246
CKP Sensor Replacement ..... 11-246
MAP Sensor Replacement ..... 11-247
MAF Sensor/IAT Sensor 1 Replacement ..... 11-247
IAT Sensor 2 Replacement ..... 11-248
ECT Sensor 1 Replacement ..... 11-249
ECT Sensor 2 Replacement ..... 11-250
Knock Sensor Replacement ..... 11-250
ELD Replacement ..... 11-251
PCM Replacement ..... 11-252


## Electronic Throttle Control System


Component Location Index ..... 11-254
DTC Troubleshooting ..... 11-255
APP Sensor Signal Inspection ..... 11-294
Accelerator Pedal Module Removal/Installation ..... 11-295


## VTEC/VTC


Component Location Index ..... 11-296
DTC Troubleshooting ..... 11-297
VTC Oil Control Solenoid Valve Removal/Test/Installation ..... 11-319
CMP Sensor A Replacement ..... 11-320
Rocker Arm Oil Control Valve Removal/Installation ..... 11-321
Rocker Arm Oil Pressure Switch Removal/Installation ..... 11-321


## Idle Control System


Component Location Index ..... 11-322
DTC Troubleshooting ..... 11-323
A/C Signal Circuit Troubleshooting ..... 11-332
Alternator FR Signal Circuit Troubleshooting ..... 11-333
PSP Switch Signal Circuit Troubleshooting ..... 11-334
Brake Pedal Position Switch Signal Circuit Troubleshooting ..... 11-336
Idle Speed Inspection ..... 11-338
PCM Idle Learn Procedure ..... 11-339


## Fuel Supply System


Component Location Index ..... 11-340
DTC Troubleshooting ..... 11-342
Fuel Pressure Relieving ..... 11-362
Fuel Pressure Test ..... 11-365
Transfer Fuel Pump Test ..... 11-366
Fuel Tank Draining ..... 11-367
Fuel Line Inspection ..... 11-368
Fuel Line/Quick-Connect Fitting Precautions ..... 11-370
Fuel Line/Quick-Connect Fitting Removal ..... 11-372
Fuel Line/Quick-Connect Fitting Installation ..... 11-374
Fuel Pulsation Damper Replacement ..... 11-377
Fuel Pressure Regulator Replacement ..... 11-378
Fuel Pressure Regulator Base Replacement ..... 11-379
Fuel Tank Unit Removal/Installation ..... 11-380
Fuel Filter Replacement ..... 11-382
Fuel Pump/Fuel Gauge Sending Unit Replacement ..... 11-382
Secondary Fuel Gauge Sending Unit Removal/Installation ..... 11-383
Fuel Tank Replacement ..... 11-385
Fuel Fill Pipe Removal/Installation ..... 11-387
Fuel Pump Control Module Replacement ..... 11-388
Fuel Gauge Sending Unit Test ..... 11-389
Secondary Fuel Gauge Sending Unit Test ..... 11-390
Low Fuel Indicator Test ..... 11-391

Protected by AR

## Intake Air System


Component Location Index ..... 11-392
Throttle Body Test ..... 11-393
Throttle Body Cleaning ..... 11-394
Air Cleaner Removal/Installation ..... 11-394
Air Cleaner Element Inspection/Replacement ..... 11-395
Resonator Removal/Installation ..... 11-395
Throttle Body Removal/Installation ..... 11-396


## Turbocharger Control System


Component Location Index ..... 11-397
DTC Troubleshooting ..... 11-398
Turbocharger Bypass Control Solenoid Valve Inspection ..... 11-431
Turbocharger Bypass Control Solenoid Valve Replacement ..... 11-432
Turbocharger Wastegate Control Solenoid Valve Inspection ..... 11-433
Turbocharger Wastegate Control Solenoid Valve Replacement ..... 11-434
Turbocharger Boost Control Solenoid Valve Inspection ..... 11-435
Turbocharger Boost Control Solenoid Valve Replacement ..... 11-436
Turbocharger Boost Sensor Replacement ..... 11-436


## Catalytic Converter System


Component Location Index ..... 11-437
DTC Troubleshooting ..... 11-438
Warm Up Three Way Catalytic Converter Removal/Installation ..... 11-440
Under-floor Three Way Catalytic Converter Removal/Installation ..... 11-443


## PCV System


Component Location Index ..... 11-444
PCV Valve Inspection ..... 11-445
PCV Valve Replacement ..... 11-445


## EVAP System


Component Location Index ..... 11-446
DTC Troubleshooting ..... 11-447
Fuel Cap Warning Message System Troubleshooting ..... 11-483
EVAP Canister Replacement ..... 11-485
FTP Sensor Replacement ..... 11-485
EVAP Canister Purge Valve Replacement ..... 11-486
EVAP Canister Purge Nozzle Replacement ..... 11-486
EVAP Canister Vent Shut Valve Replacement ..... 11-487
EVAP Canister Filter Replacement ..... 11-487
Non-return Valve A/B Inspection/Replacement ..... 11-488

Protected by AR



## Special Tools

| Ref. No. | Tool Number | Description | Qty |
|---|---|---|---|
| ① | 07AAA-S0XA100 | Fuel Sender Wrench | 1 |
| ② | 07AAJ-S6MA150 | Fuel Pressure Gauge Attachment Set | 1 |
| ③ | 07JAZ-001000B | Vacuum/Pressure Gauge, 0—4 in.Hg | 1 |
| ④ | 07NAJ-P07010A | Pressure Gauge Adapter | 1 |
| ⑤ | 07ZAJ-S5AA200 | Oil Pressure Hose | 1 |
| ⑥-1 | 07406-0020201 | A/T Pressure Hose | 1 |
| ⑥-2 | 07406-0070301 | A/T Low Pressure Gauge W/Panel | 1 |
| ⑥-3 | 07MAJ-PY4011A | A/T Pressure Hose, 2,210 mm | 1 |
| ⑥-4 | 07MAJ-PY40120 | A/T Pressure Hose, Adapter | 1 |
| ⑦ | 07406-004000B | Fuel Pressure Gauge | 1 |

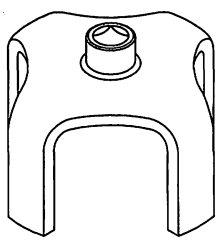

①

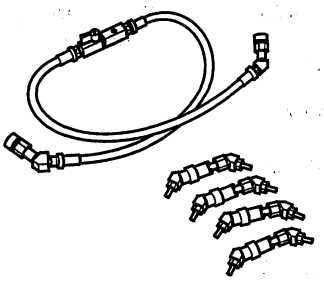

②

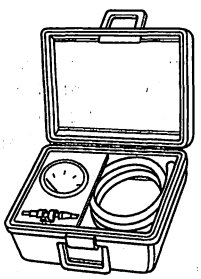

③

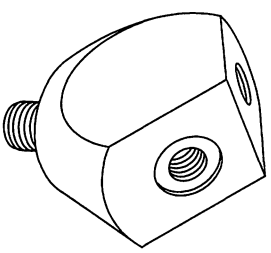

④

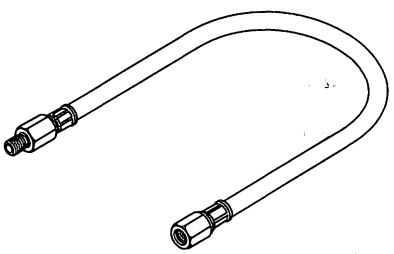

⑤

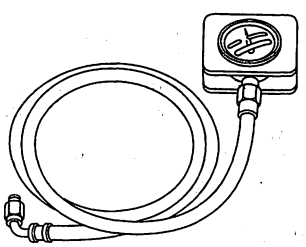

⑥-1, ⑥-2, ⑥-3, ⑥-4

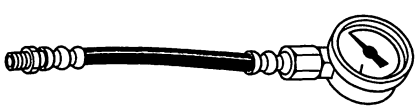

⑦



BACK

Protected by AR

# General Troubleshooting Information

## Intermittent Failures

The term "intermittent failure" means a system may have had a failure, but it checks OK now. If the malfunction indicator lamp (MIL) on the dash does not come on, check for poor connections or loose pins at all connectors related to the circuit that you are troubleshooting. If the MIL was on but then went out, the original problem may have been intermittent.

## Opens and Shorts

"Open" and "short" are common electrical terms. An open is a break in a wire or at a connection. A short is an accidental connection of a wire to ground or to another wire. In simple electronics, this usually means something won't work at all. With complex electronics (such as PCMs) this can sometimes mean something works, but not the way it's supposed to.

## How to Use the HDS (Honda Diagnostic System)

**If the MIL (malfunction indicator lamp) has come on**

1. Start the engine, and check the MIL (A).

   NOTE: If the ignition switch is turned ON (II), and the engine is not started, the MIL stays on for 15—20 seconds (see page 11-76).

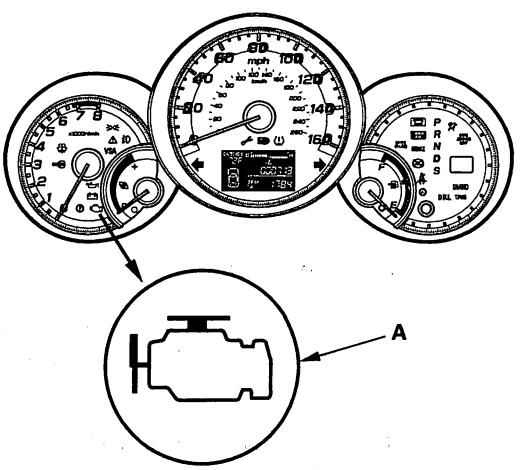


2. If the MIL stays on, connect the HDS to the data link connector (DLC) (A) located under the driver's side of the dashboard.

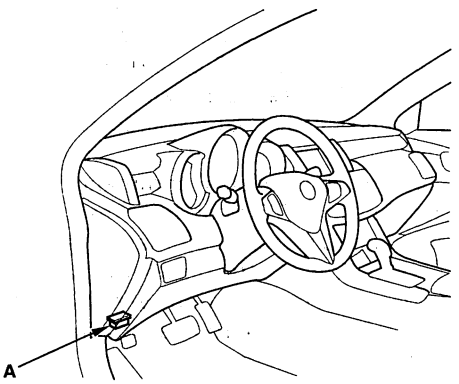


3. Turn the ignition switch ON (II).

4. Make sure the HDS communicates with the PCM. If it doesn't, go to the DLC circuit troubleshooting (see page 11-229).

5. Check the diagnostic trouble code (DTC) and note it. Also check the freeze data and/or on-board snapshot data, and download any data found. Then refer to the indicated DTC's troubleshooting, and begin the appropriate troubleshooting procedure.

   NOTE:
   - Freeze data indicates the engine conditions when the first malfunction, misfire, or fuel trim malfunction was detected.
   - The HDS can read the DTC, freeze data, on-board snapshot, current data, and other powertrain control module (PCM) data.
   - For specific operations, refer to the user's manual that came with the HDS.

6. If no DTCs are found, go to MIL troubleshooting (see page 11-228).

**If the MIL did not stay on**
If the MIL did not stay on but there is a driveability problem, do the symptom troubleshooting.

**If you can't duplicate the DTC**
Some of the troubleshooting requires you to reset the PCM and try to duplicate the DTC. If the problem is intermittent and you can't duplicate the code, do not continue through the procedure. To do so will only result in confusion and possibly, a needlessly replaced PCM.

(cont'd)

Protected by AR



## General Troubleshooting Information (cont'd)

### HDS Clear Command

The PCM stores various specific data to correct the system even if there is no electrical power such as when the battery negative terminal or No. 19 FI MAIN (15 A) fuse are disconnected. Stored data based on failed parts should be cleared by using the "CLEAR COMMAND" of the HDS, if parts are replaced.

The HDS has three kinds of clear commands to meet this purpose. They are DTC clear, PCM reset, and crank (CKP) pattern clear. DTC clear command erases all stored DTC codes, freeze data, on-board snapshot, and readiness codes. This must be done with the HDS after reproducing the DTC during troubleshooting.
The PCM reset command erases all stored DTC codes, freeze data, on-board snapshot, readiness codes, and all specific data to correct the system except crank (CKP) pattern. If the crank (CKP) pattern data in the PCM was cleared, you must do the crank (CKP) pattern learn procedure. The crank (CKP) pattern clear command erases only crank (CKP) pattern data. This command is for repair of a misfire or the CKP sensor.

### Scan Tool Clear Command

If you are using a generic scan tool to clear commands, be aware that there is only one setting for clearing the PCM, and it clears all commands at the same time (crank (CKP) pattern learn, idle learn, readiness codes, freeze data, on-board snapshot, and DTCs). After you clear all commands, you then need to do these procedures, in this order: PCM idle learn procedure (see page 11-339); crank (CKP) pattern learn procedure; test-drive to set readiness codes to complete (see page 11-76).

### DTC Clear

1. Clear the DTC with the HDS while the engine is stopped.
2. Turn the ignition switch OFF.
3. Turn the ignition switch ON (II), and wait for 30 seconds.
4. Turn the ignition switch OFF, and disconnect the HDS from the DLC.

### PCM Reset

1. Reset the PCM with the HDS while the engine is stopped.
2. Turn the ignition switch OFF.
3. Turn the ignition switch ON (II), and wait for 30 seconds.
4. Turn the ignition switch OFF, and disconnect the HDS from the DLC.
5. Do the PCM idle learn procedure (see page 11-339).

### Crank (CKP) Pattern Clear/Crank (CKP) Pattern Learn

### Clear/Learn Procedure (with the HDS)

1. Connect the HDS to the data link connector (DLC) (A) located under the driver's side of the dashboard.

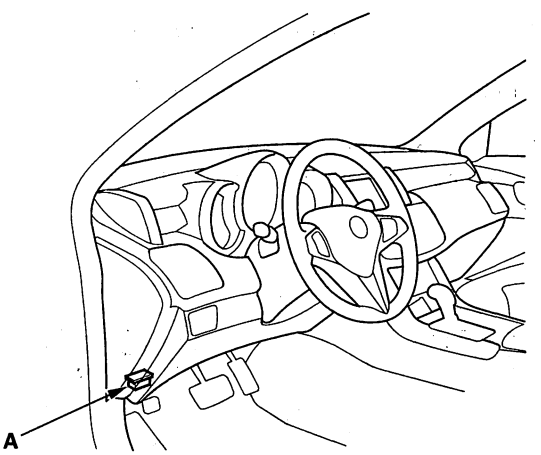


2. Turn the ignition switch ON (II).
3. Make sure the HDS communicates with the PCM. If it doesn't, go to the DLC circuit troubleshooting (see page 11-229).
4. Select CRANK PATTERN in the ADJUSTMENT MENU with the HDS.
5. Select CRANK PATTERN LEARNING with the HDS, and follow the screen prompts.



BACK

Protected by AR

## Learn Procedure (without the HDS)

1. Start the engine. Hold the engine speed at 3,000 rpm without load (in Park or neutral) until the radiator fan comes on.
2. Test-drive the vehicle on a level road: Decelerate (with the throttle fully closed) from an engine speed of 2,500 rpm down to 1,000 rpm with the transmission in S position 1st or 2nd gear.
3. Repeat step 2 several times.
4. Turn the ignition switch OFF.
5. Turn the ignition switch ON (II), and wait for 30 seconds.

## How to End a Troubleshooting Session (required after any troubleshooting)

1. Reset the PCM with the HDS.
2. Do the PCM idle learn procedure (see page 11-339).
3. Turn the ignition switch OFF.
4. Disconnect the HDS from the DLC.

   NOTE: The PCM is part of the immobilizer system. If you replace the PCM, it will have a different immobilizer code. In order for the engine to start, you must rewrite the immobilizer code with the HDS.

(cont'd)

Protected by AR



## General Troubleshooting Information (cont'd)

### How to Troubleshoot Circuits at the PCM Connectors

NOTE: The PCM overwrites data and monitors the EVAP system for up to 30 minutes after the ignition switch is turned OFF. Jumping the SCS line after turning the ignition switch OFF cancels this function. Disconnecting the PCM during this function, without jumping the SCS line first, can damage the PCM.

1. Jump the SCS line with the HDS.

2. Disconnect the PCM connectors A, B, and C.

   NOTE: PCM connectors A, B, and C have symbols (A=□, B=△, C=○) embossed on them for identification.

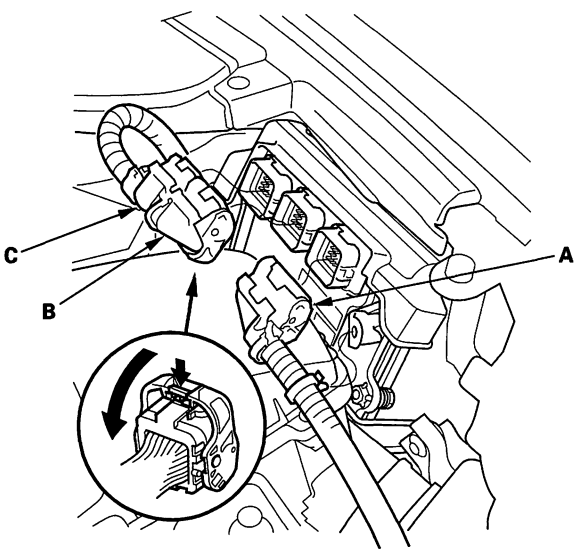


3. When diagnosis/troubleshooting is done at the PCM connector, use the terminal test port (A) above the terminal you need to check.

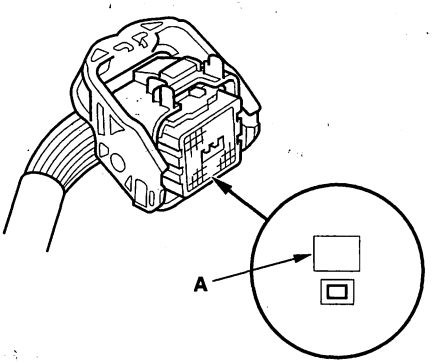


4. Connect one side of the patch cord (A) terminals to a commercially available digital multimeter (B), and connect the other side of the patch cord terminals to a commercially available banana jack (Pomona Electronics Tool No. 3563 or equivalent) (C).

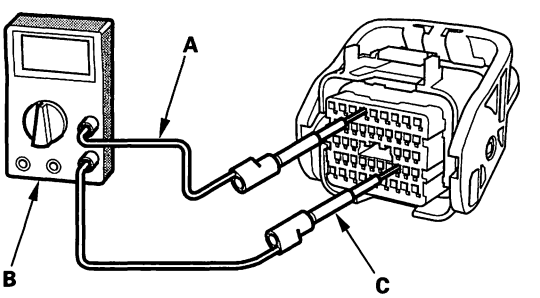


5. Gently contact the pin probe (male) at the terminal test port from the terminal side. Do not force the tips into the terminals.

**NOTICE**

- For accurate results, always use the pin probe (male).
- To prevent damage to the connector terminals, do not insert test equipment probes, paper clips, or other substitutes as they can damage the terminals. Damaged terminals cause a poor connection and an incorrect measurement.
- Do not puncture the insulation on a wire. Punctures can cause poor or intermittent electrical connections.



BACK

Protected by AR

## Updating the PCM

**Special Tools Required**
- Honda diagnostic system (HDS)
- Honda interface module (HIM)
- HDS pocket tester

NOTE:
- Use this procedure when you need to update the PCM in a troubleshooting procedure.
- Make sure the HDS/HIM has the latest software version.
- Before you update the PCM, make sure the battery in the vehicle is fully charged.
- Never turn the ignition switch OFF during the update. If there is a problem with the update, leave the ignition switch ON.
- To prevent PCM damage, do not operate anything electrical (headlights, audio system, brakes, A/C, power windows, moonroof (if equipped), door locks, etc.) during the update.
- To ensure the latest program is installed, do an PCM update whenever the PCM is substituted or replaced.
- You cannot update an PCM with a program it already has. It will only accept a new program.
- High temperature in the engine compartment might cause the PCM to become too hot to run the update. If the engine has been running before this procedure, open the hood and cool the engine compartment.
- If you need to diagnose the Honda interface module (HIM) because the HIM's red (#3) lamp came on or was flashed during the update, leave the ignition switch in the ON (II) position when you disconnect the HIM from the data link connector (DLC). This will prevent PCM damage.

1. Turn the ignition switch ON (II), but do not start the engine.

2. Connect the HDS to the data link connector (DLC) (A) located under the driver's side of the dashboard.

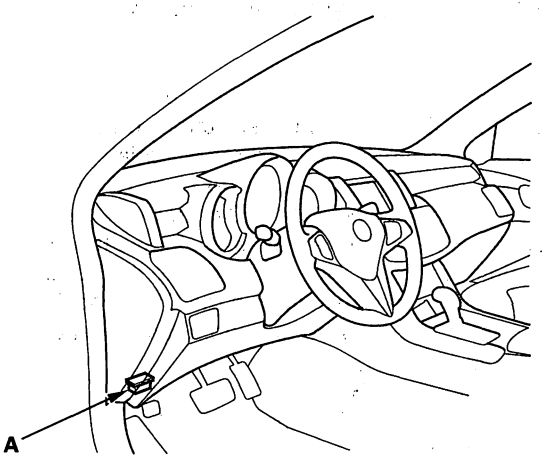


3. Make sure the HDS communicates with the PCM. If it doesn't, go to the DLC circuit troubleshooting (see page 11-229). If you are returning from the DLC circuit troubleshooting, skip step 4 to 5 and clean the throttle body after updating the PCM (see page 11-394).

4. USA, Canada models: Select the INSPECTION MENU with the HDS.

5. USA, Canada models: Select the ETCS TEST, then select the TP POSITION CHECK, and follow the HDS screen prompts.

   NOTE: If the TP POSITION CHECK indicates FAILED, continue this procedure.

6. Exit the Honda diagnostic system (USA, Canada models). Select the update program, and follow the screen prompts to update the PCM.

(cont'd)

Protected by AR



## General Troubleshooting Information (cont'd)

7. If the software in the PCM is the latest, disconnect the HDS/HIM from the DLC, and go back to the procedure that you were doing. If the software in the PCM is not the latest, follow the instructions on the screen. If prompted to choose the PGM-FI system or the A/T system, make sure you update both.

   NOTE: If the PCM update system requires you to cool the PCM, follow the instructions on screen. If you run into a problem during the update procedure, (programming takes over 15 minutes, status bar goes over 100 %, D or immobilizer light flashes, HDS tablet freezes, etc.), follow these steps to minimize the chance of damaging the PCM:
   - Leave the ignition switch in the ON (II) position.
   - Connect a jumper battery (do not connect a battery charger).
   - Shut down the HDS.
   - Disconnect the HDS from the DLC.
   - Reboot the HDS.
   - Reconnect the HDS to the DLC, and try the update procedure again.

8. USA, Canada models: If the TP POSITION CHECK failed in step 6, clean the throttle body (see page 11-394).

9. Do the PCM idle learn procedure (see page 11-339).

10. Do the CKP pattern learn procedure.

### Substituting the PCM

**Special Tools Required**
- Honda diagnostic system (HDS)
- Honda interface module (HIM)
- HDS pocket tester

NOTE: Use this procedure when you need to substitute a known-good PCM during troubleshooting procedures.

1. Connect the HDS to the data link connector (DLC) (A) located under the driver's side of the dashboard.

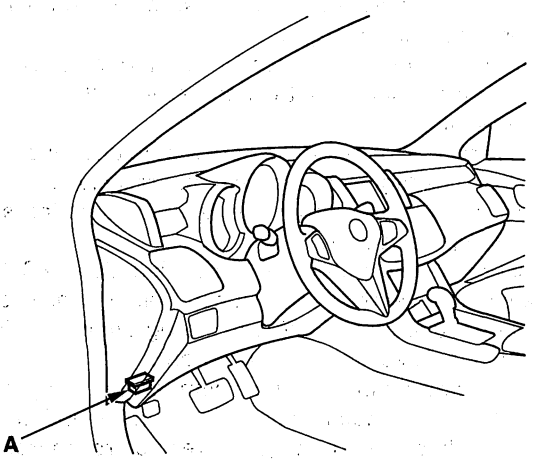


2. Turn the ignition switch ON (II).

3. Make sure the HDS communicates with the PCM. If it doesn't, go to the DLC circuit troubleshooting (see page 11-229). If you are returning from DLC circuit troubleshooting, skip step 4 to 8, and clean the throttle body after substituting the PCM (see page 11-394).

4. USA, Canada models: Select the INSPECTION MENU with the HDS.

5. USA, Canada models: Select the ETCS TEST, then select the TP POSITION CHECK, and follow the screen prompts.

   NOTE: If the TP POSITION CHECK indicates FAILED, continue this procedure.

6. Turn the ignition switch OFF.

7. Jump the SCS line with the HDS.



BACK

Protected by AR

8. Disconnect the PCM connectors A, B, and C.

   NOTE: PCM connectors A, B, and C have symbols (A=□, B=△, C=○) embossed on them for identification.

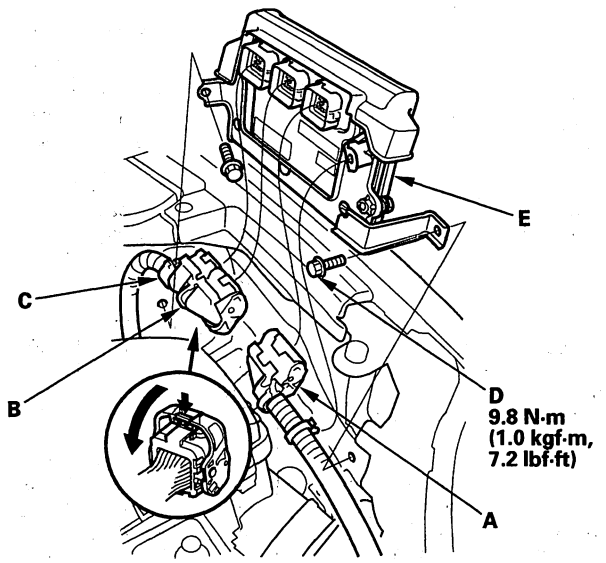


9. Remove the bolts (D), then remove the PCM assembly (E).

10. Remove the cover (A) and the bracket (B) from the PCM (C).

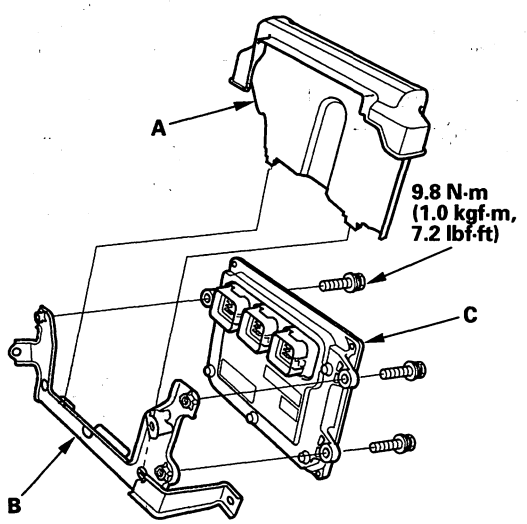


11. Install the PCM in the reverse order of removal.

12. Turn the ignition switch ON (II).

    NOTE: DTC P0630 "VIN Not Programmed or Mismatch" may be stored because the VIN has not been programmed into the PCM; ignore it, and continue this procedure.

13. Manually input the VIN to the PCM with the HDS.

14. Update the PCM if it does not have the latest software.

15. Select the IMMOBI SYSTEM with the HDS.

16. Enter the immobilizer code using the PCM replacement procedure in the HDS; this allows you to start the engine.

17. Reset the PCM with the HDS.

18. USA, Canada models: If the TP POSITION CHECK failed in step 5, clean the throttle body (see page 11-394).

19. Do the PCM idle learn procedure (see page 11-339).

20. Do the CKP pattern learn procedure.

## OBD Status

The OBD status shows the current system status of each DTC and all of the parameters. This function is used to see if the repair was successfully completed. The results of diagnostic tests for the DTC are displayed as:

- PASSED: The on board diagnosis is successfully finished.
- FAILED: The on board diagnosis has finished but failed.
- EXECUTING: The vehicle is in enable criteria conditions for the DTC and the on board diagnosis is running.
- NOT COMPLETED: The on board diagnosis was running but is out of the enable conditions of the DTC.
- OUT OF CONDITION: The vehicle has stayed out of the enable conditions for the DTC.

Protected by AR



## DTC Troubleshooting Index

| DTC (MIL indication*1) | Two Drive Cycle Detection | Detection Item | MIL | Note |
|---|---|---|---|---|
| P0010 (56) | — | Variable Valve Timing Control (VTC) Oil Control Solenoid Valve Malfunction | ON | (see page 11-297) |
| P0011 (56) | ○ | Variable Valve Timing Control (VTC) System Malfunction | ON | (see page 11-300) |
| P0034 (194) | — | Turbocharger Bypass Control Solenoid Valve Circuit Low Voltage | ON | (see page 11-398) |
| P0035 (194) | — | Turbocharger Bypass Control Solenoid Valve Circuit High Voltage | ON | (see page 11-402) |
| P0045 (172) | — | Turbocharger Boost Control Solenoid Valve Circuit Malfunction | ON | (see page 11-403) |
| P0096 (10) | — | Intake Temperature (IAT) Sensor 2 Circuit Range/Performance Problem | ON | (see page 11-81) |
| P0097 (10) | — | Intake Air Temperature (IAT) Sensor 2 Circuit Low Voltage | ON | (see page 11-82) |
| P0098 (10) | — | Intake Air Temperature (IAT) Sensor 2 Circuit High Voltage | ON | (see page 11-84) |
| P0101 (50) | ○ | Mass Air Flow (MAF) Sensor Circuit Range/Performance Problem | ON | (see page 11-87) |
| P0102 (50) | — | Mass Air Flow (MAF) Sensor Circuit Low Voltage | ON | (see page 11-89) |
| P0103 (50) | — | Mass Air Flow (MAF) Sensor Circuit High Voltage | ON | (see page 11-92) |
| P0107 (3) | — | Manifold Absolute Pressure (MAP) Sensor Circuit Low Voltage | ON | (see page 11-94) |
| P0108 (3) | — | Manifold Absolute Pressure (MAP) Sensor Circuit High Voltage | ON | (see page 11-96) |
| P0112 (125) | — | Intake Air Temperature (IAT) Sensor 1 Circuit Low Voltage | ON | (see page 11-99) |
| P0113 (125) | — | Intake Air Temperature (IAT) Sensor 1 Circuit High Voltage | ON | (see page 11-101) |
| P0116 (86) | ○ | Engine Coolant Temperature (ECT) Sensor 1 Circuit Range/ Performance Problem | ON | (see page 11-104) |
| P0117 (6) | — | Engine Coolant Temperature (ECT) Sensor 1 Circuit Low Voltage | ON | (see page 11-105) |
| P0118 (6) | — | Engine Coolant Temperature (ECT) Sensor 1 Circuit High Voltage | ON | (see page 11-107) |
| P0122 (7) | — | Throttle Position (TP) Sensor A Circuit Low Voltage | ON | (see page 11-255) |
| P0123 (7) | — | Throttle Position (TP) Sensor A Circuit High Voltage | ON | (see page 11-257) |
| P0125 (86) | ○ | Engine Coolant Temperature (ECT) Sensor 1 Malfunction/Slow Response | ON | (see page 11-110) |
| P0128 (87) | ○ | Cooling System Malfunction | ON | (see page 11-111) |
| P0133 (61) | ○ | Air Fuel Ratio (A/F) Sensor (Sensor 1) Malfunction/Slow Response | ON | (see page 11-113) |
| P0134 (41) | ○ | Air Fuel Ratio (A/F) Sensor (Sensor 1) Heater System Malfunction | ON | (see page 11-114) |
| P0135 (41) | — | Air Fuel Ratio (A/F) Sensor (Sensor 1) Heater Circuit Malfunction | ON | (see page 11-115) |
| P0137 (63) | ○ | Secondary Heated Oxygen Sensor (Secondary HO2S (Sensor 2)) Circuit Low Voltage | ON | (see page 11-120) |
| P0138 (63) | ○ | Secondary Heated Oxygen Sensor (Secondary HO2S (Sensor 2)) Circuit High Voltage | ON | (see page 11-122) |
| P0139 (63) | ○ | Secondary Heated Oxygen Sensor (Secondary HO2S (Sensor 2)) Slow Response | ON | (see page 11-125) |
| P0141 (65) | — | Secondary Heated Oxygen Sensor (Secondary HO2S (Sensor 2)) Heater Circuit Malfunction | ON | (see page 11-126) |
| P0171 (45) | ○ | Fuel System Too Lean | ON | (see page 11-130) |
| P0172 (45) | ○ | Fuel System Too Rich | ON | (see page 11-130) |
| P0222 (7) | — | Throttle Position (TP) Sensor B Circuit Low Voltage | ON | (see page 11-260) |
| P0223 (7) | — | Throttle Position (TP) Sensor B Circuit High Voltage | ON | (see page 11-263) |
| P0234 (26) | ○ | Turbocharger Overboost Problem | ON | (see page 11-407) |
| P0236 (171) | ○ | Turbocharger Boost Sensor Circuit Range/Performance Problem | ON | (see page 11-409) |
| P0237 (171) | — | Turbocharger Boost Sensor Circuit Low Voltage | ON | (see page 11-411) |
| P0238 (171) | — | Turbocharger Boost Sensor Circuit High Voltage | ON | (see page 11-413) |
| P0243 (193) | — | Turbocharger Wastegate Control Solenoid Valve Circuit Malfunction | ON | (see page 11-416) |
| P0299 (26) | ○ | Turbocharger Underboost Problem | ON | (see page 11-420) |
| P0300 (75) any combination of the following P0301 (71) P0302 (72) P0303 (73) P0304 (74) | ○ | Random Misfire Detected | ON | (see page 11-132) |
| P0301 (71) | ○ | No. 1 Cylinder Misfire Detected | ON | (see page 11-135) |
| P0302 (72) | ○ | No. 2 Cylinder Misfire Detected | ON | (see page 11-135) |
| P0303 (73) | ○ | No. 3 Cylinder Misfire Detected | ON | (see page 11-135) |
| P0304 (74) | ○ | No. 4 Cylinder Misfire Detected | ON | (see page 11-135) |

NOTE: The above DTCs are indicated when the PGM-FI system is selected in the HDS. Some automatic transmission DTCs cause the MIL to come on. If the MIL is on and no DTCs are indicated in the PGM-FI system, select the A/T system, and check the automatic transmission DTCs.

* 1: These DTCs are indicated by a blinking MIL when the SCS line is jumped with the HDS.



BACK

Protected by AR

| DTC (MIL indication*1) | Two Drive Cycle Detection | Detection Item | MIL | Note |
|---|---|---|---|---|
| P0325 (23) | — | Knock Sensor Circuit Malfunction | ON | (see page 11-144) |
| P0335 (4) | — | Crankshaft Position (CKP) Sensor No Signal | ON | (see page 11-146) |
| P0339 (4) | — | Crankshaft Position (CKP) Sensor Circuit Intermittent Interruption | ON | (see page 11-149) |
| P0340 (57) | — | Camshaft Position (CMP) Sensor A No Signal | ON | (see page 11-302) |
| P0341 (57) | — | Camshaft Position (CMP) Sensor A and Crankshaft Position (CKP) Sensor Incorrect Phase Detected | ON | (see page 11-305) |
| P0344 (57) | — | Camshaft Position (CMP) Sensor A Circuit Intermittent Interruption | ON | (see page 11-307) |
| P0365 (8) | — | Camshaft Position (CMP) Sensor B No Signal | ON | (see page 11-150) |
| P0369 (8) | — | Camshaft Position (CMP) Sensor B Circuit Intermittent Interruption | ON | (see page 11-153) |
| P0420 (67) | ○ | Catalyst System Efficiency Below Threshold | ON | (see page 11-438) |
| P0443 (92) | — | Evaporative Emission (EVAP) Canister Purge Valve Circuit Malfunction | ON | (see page 11-447) |
| P0451 (91) | ○ | Fuel Tank Pressure (FTP) Sensor Circuit Range/Performance Problem | ON | (see page 11-454) |
| P0452 (91) | ○ | Fuel Tank Pressure (FTP) Sensor Circuit Low Voltage | ON | (see page 11-455) |
| P0453 (91) | ○ | Fuel Tank Pressure (FTP) Sensor Circuit High Voltage | ON | (see page 11-458) |
| P0455 (90) | ○ | Evaporative Emission (EVAP) System Large Leak Detected | ON | (see page 11-461) |
| P0456 (90) | ○ | Evaporative Emission (EVAP) System Very Small Leak Detected | ON | (see page 11-461) |
| P0457 (90) | — | Evaporative Emission (EVAP) System Leak Detected/Fuel Fill Cap Loose or Missing | OFF | (see page 11-464) |
| P0461 (121) | — | Fuel Level Sensor (Fuel Gauge Sending Unit) Circuit Range/ Performance Problem | OFF | (see page 11-342) |
| P0462 (121) | — | Fuel Level Sensor (Fuel Gauge Sending Unit) Circuit Low Voltage | OFF | (see page 11-343) |
| P0463 (121) | — | Fuel Level Sensor (Fuel Gauge Sending Unit) Circuit High Voltage | OFF | (see page 11-347) |
| P0496 (92) | ○ | Evaporative Emission (EVAP) System High Purge Flow Detected | ON | (see page 11-466) |
| P0497 (90) | ○ | Evaporative Emission (EVAP) System Low Purge Flow Detected | ON | (see page 11-467) |
| P0498 (117) | — | Evaporative Emission (EVAP) Canister Vent Shut Valve Circuit Low Voltage | ON | (see page 11-471) |
| P0499 (117) | — | Evaporative Emission (EVAP) Canister Vent Shut Valve Circuit High Voltage | ON | (see page 11-474) |
| P0506 (14) | ○ | Idle Control System RPM Lower Than Expected | ON | (see page 11-323) |
| P0507 (14) | ○ | Idle Control System RPM Higher Than Expected | ON | (see page 11-325) |
| P050A (167) | ○ | Cold Start Idle Air Control System Performance Problem | ON | (see page 11-154) |
| P050B (167) | ○ | Cold Start Ignition Timing Control System Performance Problem | ON | (see page 11-156) |
| P0532 (191) | — | A/C Pressure Sensor Circuit Low Voltage | OFF | (see page 11-327) |
| P0533 (191) | — | A/C Pressure Sensor Circuit High Voltage | OFF | (see page 11-329) |
| P0562 (34) | — | Charging System Low Voltage | OFF | (see page 11-159) |
| P0563 (34) | — | Powertrain Control Module (PCM) Power Source Circuit Unexpected Voltage | OFF | (see page 11-160) |
| P0602 (196) | — | Powertrain Control Module (PCM) Programming Error | ON | (see page 11-163) |
| P0606 (0) | — | Powertrain Control Module (PCM) Processor Malfunction | ON | (see page 11-163) |
| P060A (131) | — | Powertrain Control Module (PCM) (A/T System) Internal Control Module Malfunction | ON | (see page 11-164) |
| P0627 (169) | — | Fuel Pump Control Module System Malfunction | ON | (see page 11-351) |
| P062F (131) | — | Powertrain Control Module (PCM) Internal Control Module Keep Alive Memory (KAM) Error | ON | (see page 11-164) |
| P0630 (139) | — | VIN Not Programmed or Mismatch | ON | (see page 11-165) |
| P0685 (135) | ○ | Powertrain Control Module (PCM) Power Control Circuit/Internal Circuit Malfunction | ON | (see page 11-166) |

NOTE: The above DTCs are indicated when the PGM-FI system is selected in the HDS. Some automatic transmission DTCs cause the MIL to come on. If the MIL is on and no DTCs are indicated in the PGM-FI system, select the A/T system, and check the automatic transmission DTCs.

* 1: These DTCs are indicated by a blinking MIL when the SCS line is jumped with the HDS.

(cont'd)

Protected by AR



## DTC Troubleshooting Index (cont'd)

| DTC (MIL indication*1) | Two Drive Cycle Detection | Detection Item | MIL | Note |
|---|---|---|---|---|
| P0720 (122)*2 | ——— | Output Shaft (Countershaft) Speed Sensor Circuit Malfunction | ON | (see page 11-167) |
| P1009 (56) | ——— | Variable Valve Timing Control (VTC) Advance Malfunction | ON | (see page 11-308) |
| P1109 (13) | ——— | Barometric Pressure (BARO) Sensor Circuit Out of Range High | ON | (see page 11-168) |
| P1116 (86) | ○ | Engine Coolant Temperature (ECT) Sensor 1 Circuit Range/ Performance Problem | ON | (see page 11-168) |
| P1128 (5) | ○ | Manifold Absolute Pressure (MAP) Sensor Signal Lower Than Expected | ON | (see page 11-170) |
| P1129 (5) | ○ | Manifold Absolute Pressure (MAP) Sensor Signal Higher Than Expected | ON | (see page 11-171) |
| P1157 (48) | ——— | Air Fuel Ratio (A/F) Sensor (Sensor 1) AFS Circuit High Voltage | ON | (see page 11-173) |
| P1172 (61) | ○ | Air Fuel Ratio (A/F) Sensor (Sensor 1) Circuit Out of Range High | ON | (see page 11-176) |
| P1233 (171) | ○ | Turbocharger Boost Sensor/Barometric Pressure (BARO) Sensor Incorrect Correlation | ON | (see page 11-423) |
| P1234 (171) | ○ | Turbocharger Boost Sensor/Manifold Absolute Pressure (MAP) Sensor Incorrect Correlation | ON | (see page 11-423) |
| P1297 (20) | ——— | Electrical Load Detector (ELD) Circuit Low Voltage | OFF | (see page 11-177) |
| P1298 (20) | ——— | Electrical Load Detector (ELD) Circuit High Voltage | OFF | (see page 11-179) |
| P1454 (90) | ○ | Fuel Tank Pressure (FTP) Sensor Range/Performance Problem | ON | (see page 11-475) |
| P145A (90) | ○ | Evaporative Emission (EVAP) System Incorrect Purge Flow Detected | ON | (see page 11-478) |
| P145B (90) | ○ | Evaporative Emission (EVAP) System Purge Line Non-return Valve A Stuck Open | ON | (see page 11-482) |
| P145C (90) | ○ | Evaporative Emission (EVAP) System Purge Flow Malfunction (Vacuum Purge) | ON | (see page 11-482) |
| P145D (90) | ○ | Evaporative Emission (EVAP) System Purge Flow Malfunction (Jet Purge) | ON | (see page 11-482) |
| P1549 (34) | ——— | Charging System High Voltage | OFF | (see page 11-181) |
| P1658 (40) | ——— | Electronic Throttle Control System (ETCS) Control Relay ON Malfunction | ON | (see page 11-266) |
| P1659 (40) | ——— | Electronic Throttle Control System (ETCS) Control Relay OFF Malfunction | ON | (see page 11-268) |
| P1683 (40) | ——— | Throttle Valve Default Position Spring Performance Problem | ON | (see page 11-272) |
| P1684 (40) | ——— | Throttle Valve Return Spring Performance Problem | ON | (see page 11-273) |
| P16BB (116) | ——— | Alternator B Terminal Circuit Low Voltage | OFF | (see page 11-182) |
| P16BC (116) | ——— | Alternator FR Terminal Circuit/IGP Circuit Low Voltage | OFF | (see page 11-183) |
| P2101 (40) | ——— | Electronic Throttle Control System (ETCS) Malfunction | ON | (see page 11-274) |
| P2118 (40) | ——— | Throttle Actuator Current Range/Performance Problem | ON | (see page 11-276) |
| P2122 (37) | ——— | Accelerator Pedal Position (APP) Sensor A (Throttle Position (TP) Sensor D) Circuit Low Voltage | ON | (see page 11-278) |
| P2123 (37) | ——— | Accelerator Pedal Position (APP) Sensor A (Throttle Position (TP) Sensor D) Circuit High Voltage | ON | (see page 11-281) |
| P2127 (37) | ——— | Accelerator Pedal Position (APP) Sensor B (Throttle Position (TP) Sensor E) Circuit Low Voltage | ON | (see page 11-283) |
| P2128 (37) | ——— | Accelerator Pedal Position (APP) Sensor B (Throttle Position (TP) Sensor E) Circuit High Voltage | ON | (see page 11-286) |
| P2135 (7) | ——— | Throttle Position (TP) Sensor A/B Incorrect Voltage Correlation | ON | (see page 11-288) |
| P2138 (37) | ——— | Accelerator Pedal Position (APP) Sensor A/B (Throttle Position (TP) Sensor D/E) Incorrect Voltage Correlation | ON | (see page 11-290) |
| P2176 (40) | ——— | Throttle Actuator Control System Idle Position Not Learned | ON | (see page 11-292) |
| P2183 (192) | ○ | Engine Coolant Temperature (ECT) Sensor 2 Circuit Range/ Performance Problem | ON | (see page 11-186) |
| P2184 (192) | ——— | Engine Coolant Temperature (ECT) Sensor 2 Circuit Low Voltage | ON | (see page 11-188) |
| P2185 (192) | ——— | Engine Coolant Temperature (ECT) Sensor 2 Circuit High Voltage | ON | (see page 11-190) |
| P2195 (48) | ○ | Air Fuel Ratio (A/F) Sensor (Sensor 1) Signal Stuck Lean | ON | (see page 11-193) |
| P2199 (125) | ○ | Intake Air Temperature (IAT) Sensor 1, 2 Incorrect Correlation | ON | (see page 11-195) |

NOTE: The above DTCs are indicated when the PGM-FI system is selected in the HDS. Some automatic transmission DTCs cause the MIL to come on. If the MIL is on and no DTCs are indicated in the PGM-FI system, select the A/T system, and check the automatic transmission DTCs.

* 1: These DTCs are indicated by a blinking MIL when the SCS line is jumped with the HDS.
* 2: The D indicator and MIL may come on at the same time.



BACK

Protected by AR

| DTC (MIL indication*1) | Two Drive Cycle Detection | Detection Item | MIL | Note |
|---|---|---|---|---|
| P2227 (13) | ○ | Barometric Pressure (BARO) Sensor Circuit Range/Performance Problem | ON | (see page 11-196) |
| P2228 (13) | —— | Barometric Pressure (BARO) Sensor Circuit Low Voltage | ON | (see page 11-197) |
| P2229 (13) | —— | Barometric Pressure (BARO) Sensor Circuit High Voltage | ON | (see page 11-197) |
| P2238 (48) | —— | Air Fuel Ratio (A/F) Sensor (Sensor 1) AFS+ Circuit Low Voltage | ON | (see page 11-198) |
| P2252 (48) | —— | Air Fuel Ratio (A/F) Sensor (Sensor 1) AFS− Circuit Low Voltage | ON | (see page 11-200) |
| P2261 (194) | ○ | Turbocharger Bypass Control Valve Stuck Closed | ON | (see page 11-424) |
| P2263 (26) | ○ | Turbocharger Boost System Performance Problem | ON | (see page 11-426) |
| P2270 (63) | ○ | Secondary Heated Oxygen Sensor (Secondary HO2S (Sensor 2)) Circuit Signal Stuck Lean | ON | (see page 11-202) |
| P2271 (63) | ○ | Secondary Heated Oxygen Sensor (Secondary HO2S (Sensor 2)) Circuit Signal Stuck Rich | ON | (see page 11-202) |
| P2422 (117) | ○ | Evaporative Emission (EVAP) Canister Vent Shut Valve Stuck Closed Malfunction | ON | (see page 11-475) |
| P2610 (132) | —— | Powertrain Control Module (PCM) Ignition Off Internal Timer Malfunction | ON | (see page 11-203) |
| P2646 (22) | —— | Rocker Arm Oil Pressure Switch Circuit Low Voltage | ON | (see page 11-309) |
| P2647 (22) | —— | Rocker Arm Oil Pressure Switch Circuit High Voltage | ON | (see page 11-312) |
| P2648 (21) | —— | Rocker Arm Oil Control Solenoid Circuit Low Voltage | ON | (see page 11-315) |
| P2649 (21) | —— | Rocker Arm Oil Control Solenoid Circuit High Voltage | ON | (see page 11-317) |
| P2A00 (61) | ○ | Air Fuel Ratio (A/F) Sensor (Sensor 1) Circuit Range/Performance Problem | ON | (see page 11-204) |
| U0028 (126) | —— | F-CAN Malfunction (BUS-OFF) | ON | (see page 11-205) |
| U0114 (126) | —— | F-CAN Malfunction (Powertrain Control Module (PCM)-SH-AWD Control Unit) | OFF | (see page 11-206) |
| U0122 (126) | —— | F-CAN Malfunction (Powertrain Control Module (PCM)-VSA Modulator-Control Unit) | OFF | (see page 11-208) |
| U0155 (126) | —— | F-CAN Malfunction (Powertrain Control Module (PCM)-Gauge Control Module) | ON | (see page 11-210) |
| U0300 (131) | —— | PGM-FI System and A/T System Program Version Mismatch | ON | (see page 11-212) |

NOTE: The above DTCs are indicated when the PGM-FI system is selected in the HDS. Some automatic transmission DTCs cause the MIL to come on. If the MIL is on and no DTCs are indicated in the PGM-FI system, select the A/T system, and check the automatic transmission DTCs.

* 1: These DTCs are indicated by a blinking MIL when the SCS line is jumped with the HDS.

Protected by AR



## Symptom Troubleshooting Index

When the vehicle has one of these symptoms, check for a diagnostic trouble code (DTC) with the HDS. If there is no DTC, do the diagnostic procedure for the symptom, in the sequence listed, until you find the cause.

| Symptom | Diagnostic procedure | Also check for |
|---|---|---|
| Engine will not start (MIL works OK, no DTCs set) | 1. Test the battery (see page 22-63).<br>2. Test the starter (see page 4-8).<br>3. Check the fuel pressure (see page 11-365). | • Low compression<br>• No ignition spark<br>• Intake air leaks<br>• Locked up engine<br>• Broken cam chain<br>• Contaminated fuel |
| Engine will not start (MIL comes on and stays on, or never comes on at all, no DTCs set) | Troubleshoot the MIL circuit (see page 11-228). | |
| MIL comes on and stays on, or never comes on at all, no DTCs set | Troubleshoot the MIL circuit (see page 11-228). | |
| Engine will not start (MIL works OK, no DTCs set, immobilizer indicator stays on or flashes) | Check the immobilizer system. | |
| Engine starts but stalls immediately (MIL works OK, no DTCs set, immobilizer indicator stays on or flashes) | Check the immobilizer system. | |
| Engine is hard to start (MIL works OK, no DTCs set) | 1. Test the battery (see page 22-63).<br>2. Check the fuel pressure (see page 11-365).<br>3. Clean the throttle body (see page 11-394). | • Low compression<br>• Intake air leaks<br>• Contaminated fuel<br>• Weak spark |
| Cold fast idle too low (MIL works OK, no DTCs set) | 1. Do the PCM idle learn procedure (see page 11-339).<br>2. Check the idle speed (see page 11-338).<br>3. Clean the throttle body (see page 11-394). | |
| Cold fast idle too high (MIL works OK, no DTCs set) | 1. Do the PCM idle learn procedure (see page 11-339).<br>2. Check the idle speed (see page 11-338).<br>3. Do the throttle position learning check (see page 11-393). | |
| Idle speed fluctuates (MIL works OK, no DTCs set) | 1. Do the PCM idle learn procedure (see page 11-339).<br>2. Check the idle speed (see page 11-338).<br>3. Do the carbon accumulation check (see page 11-393). | Intake vacuum leaks |
| After warming up, idle speed is below specification without load (MIL works OK, no DTCs set) | 1. Troubleshoot the alternator FR signal circuit (see page 11-333).<br>2. Do the carbon accumulation check (see page 11-393).<br>3. Troubleshoot the A/C signal circuit (see page 11-332). | |
| After warming up, idle speed is above specification without load (MIL works OK, no DTCs set) | 1. Troubleshoot the alternator FR signal circuit (see page 11-333).<br>2. Inspect the APP sensor (see page 11-294).<br>3. Troubleshoot the A/C signal circuit (see page 11-332). | |



BACK

Protected by AR

| Symptom | Diagnostic procedure | Also check for |
|---|---|---|
| After warming up, idle speed drops when steering wheel is turning<br>(MIL works OK, no DTCs set) | 1. Do the PCM idle learn procedure (see page 11-339).<br>2. Troubleshoot the PSP switch signal circuit (see page 11-334).<br>3. Do the carbon accumulation check (see page 11-393). | Power steering system |
| Low power<br>(MIL works OK, no DTCs set) | 1. Check the fuel pressure (see page 11-365).<br>2. Check the turbocharger wastegate control solenoid valve (see page 11-433).<br>3. Check the turbocharger wastegate control actuator control line.<br>4. Check the turbocharger wastegate control actuator (see page 9-11).<br>5. Check the turbocharger boost control solenoid valve (see page 11-435).<br>6. Check the turbocharger boost control actuator control line.<br>7. Check the turbocharger boost control actuator<br>8. Check the turbocharger bypass control solenoid valve (see page 11-431).<br>9. Check the turbocharger bypass control line.<br>10. Check the turbocharger bypass control valve (see page 9-11). | • Low compression<br>• Incorrect camshaft timing<br>• Incorrect engine oil level<br>• Turbocharger wastegate control actuator stuck open<br>• Turbocharger boost control actuator stuck open<br>• Turbocharger bypass valve stuck closed<br>• Turbocharger bypass valve stuck open |
| Engine stalls<br>(MIL works OK, no DTCs set) | 1. Do the PCM idle learn procedure (see page 11-339).<br>2. Check the fuel pressure (see page 11-365).<br>3. Check the idle speed (see page 11-338).<br>4. Troubleshoot the brake pedal position switch signal circuit (see page 11-336). | • Intake air leaks<br>• Faulty harness and sensor connections |
| Abnormal sound during deceleration with fuel cut<br>(MIL works OK, no DTCs set) | 1. Check the turbocharger bypass control solenoid valve (see page 11-431).<br>2. Check the turbocharger bypass valve control line.<br>3. Check the turbocharger bypass valve (see page 9-11). | Turbocharger bypass valve stuck closed |
| Fuel cut happens during acceleration with throttle widely open<br>(MIL works OK, no DTCs set) | 1. Check the turbocharger wastegate control solenoid valve (see page 11-433).<br>2. Check the turbocharger wastegate control actuator control line.<br>3. Check the turbocharger wastegate control actuator (see page 9-11). | Turbocharger wastegate control actuator stuck closed |

(cont'd)

Protected by AR



## Symptom Troubleshooting Index (cont'd)

| Symptom | Diagnostic procedure | Also check for |
|---|---|---|
| Difficult to refuel<br>(MIL works OK, no DTCs set) | 1. Check the fuel vent tube between the EVAP canister and the fuel tank.<br>2. Check the fuel tank vapor recirculation tube between the fuel pipe and the fuel tank.<br>3. Replace the fuel tank unit (see page 11-380).<br>4. Replace the fuel tank (see page 11-385). | Malfunctioning gas station filling nozzle. |
| Fuel overflows during refueling<br>(No DTCs set) | 1. Replace the fuel tank unit (see page 11-380).<br>2. Replace the fuel tank (see page 11-385). | Malfunctioning gas station filling nozzle. |
| HDS does not communicate with the PCM or the vehicle | Troubleshoot the DLC circuit (see page 11-229). | |
| Fuel cap warning message comes on and stays on<br>(MIL works OK, no DTCs set) | Troubleshoot the fuel cap warning message system (see page 11-483). | |



BACK

Protected by AR

# System Description

## Electronic Control System

The functions of the fuel and emission control systems are managed by the powertrain control module (PCM).

**Self-diagnosis**
The PCM detects a failure of a signal from a sensor or from another control unit and stores a Temporary DTC or a DTC in erasable memory (RAM). Depending on the failure, a DTC is stored in either the first or the second drive cycle (for DTC P0457, the DTC is set in the beginning of the third drive cycle). When a DTC is stored, the PCM turns on the malfunction indicator lamp (MIL) by sending a command to the gauge control module.

- **One Drive Cycle Detection Method**
  When an abnormality occurs in the signal from a sensor or from another control unit, the PCM stores a DTC for the failure in the RAM and turns on the MIL immediately.

- **Two Drive Cycle Detection Method**
  When an abnormality occurs in the signal from a sensor or from another control unit in the first drive cycle, the PCM stores a Temporary DTC for the failure in RAM. The MIL does not come on at this time. If the failure continues in the second drive cycle, the PCM stores a DTC in erasable memory and turns on the MIL.

**Fail-safe Function**
When an abnormality occurs in the signal from a sensor or from another control unit, the PCM ignores that signal and substitutes a pre-programmed value for them that allows the engine to continue running. This causes a DTC to be stored and the MIL to come on.

**MIL Bulb Check and Readiness Code Condition**
When the ignition switch is turned ON (II), the PCM supplies ground to the MIL circuit for about 15 to 20 seconds to check the bulb condition. If any readiness codes are not set to complete, the MIL flashes five times. If all readiness codes are set to complete, the MIL goes off.

**Self Shut Down (SSD) Mode**
After the ignition switch is turned OFF, the PCM stays on (up to 30 minutes). If the PCM connector is disconnected during this time, the PCM may be damaged. To cancel this mode, disconnect the negative cable from the battery or jump the SCS line with the HDS after the ignition switch is turned OFF.

(cont'd)

Protected by AR



## System Description (cont'd)

### PCM Electrical Connections

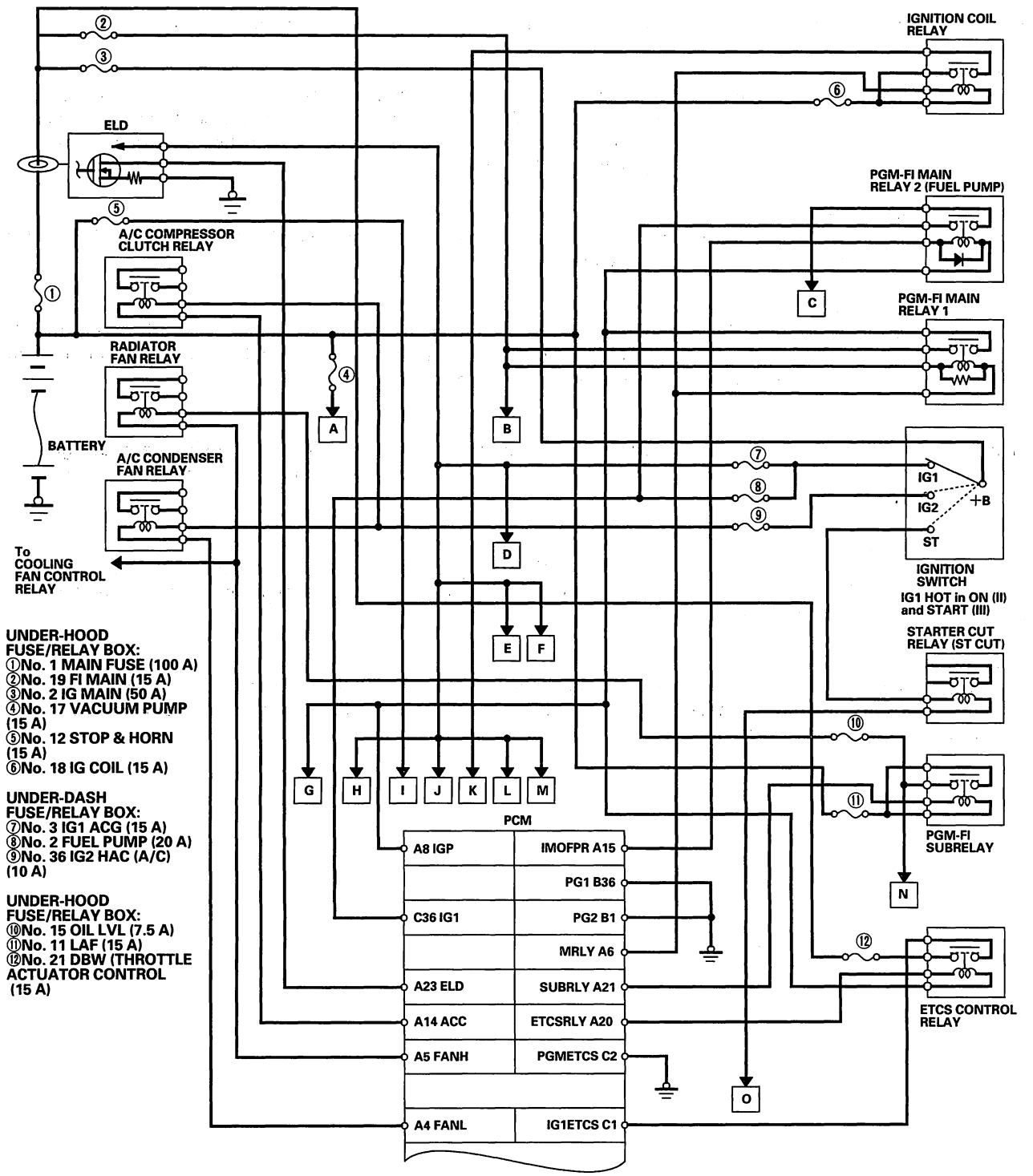




BACK

Protected by AR

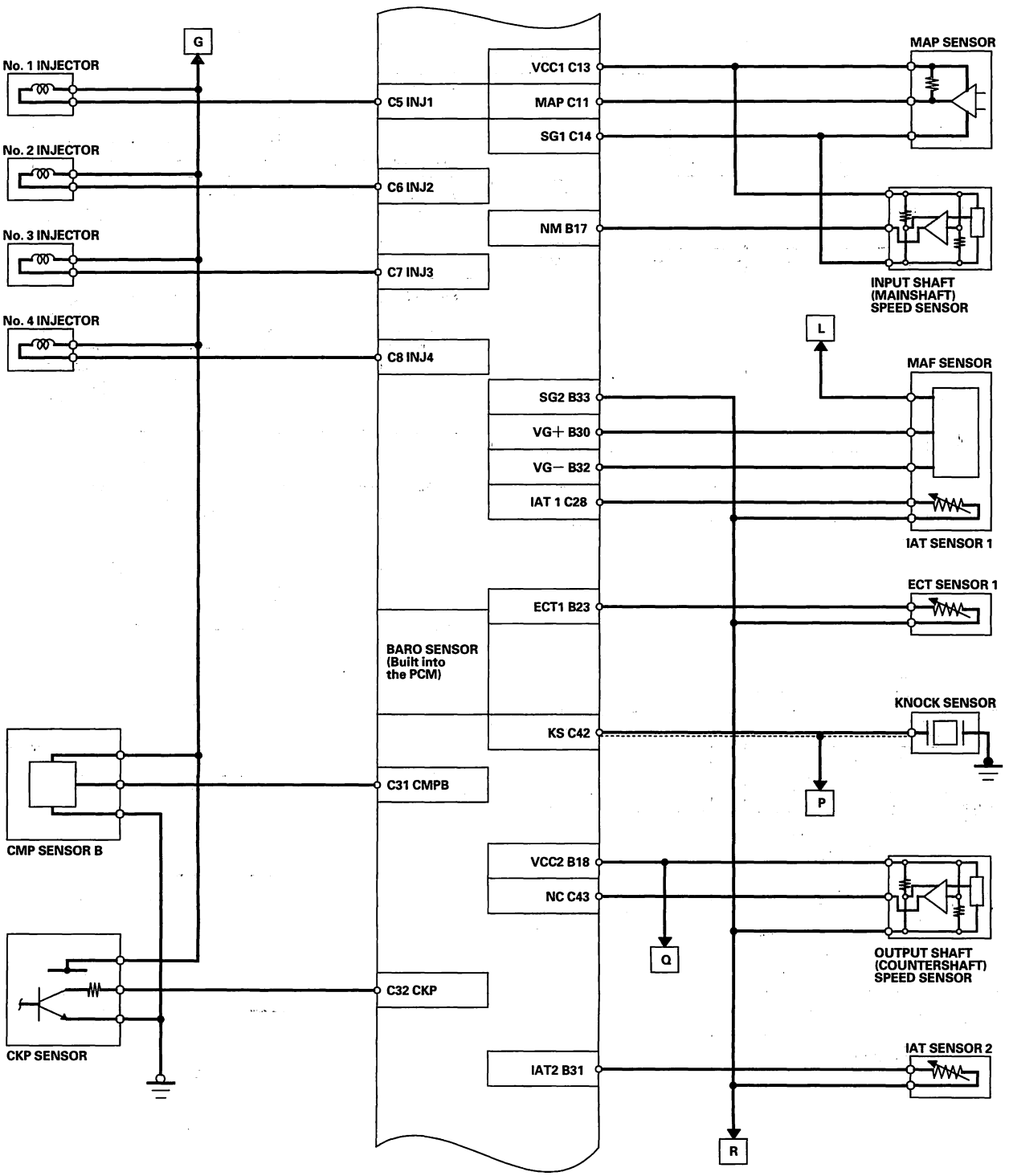


(cont'd)

Protected by AR



## System Description (cont'd)

### PCM Electrical Connections (cont'd)

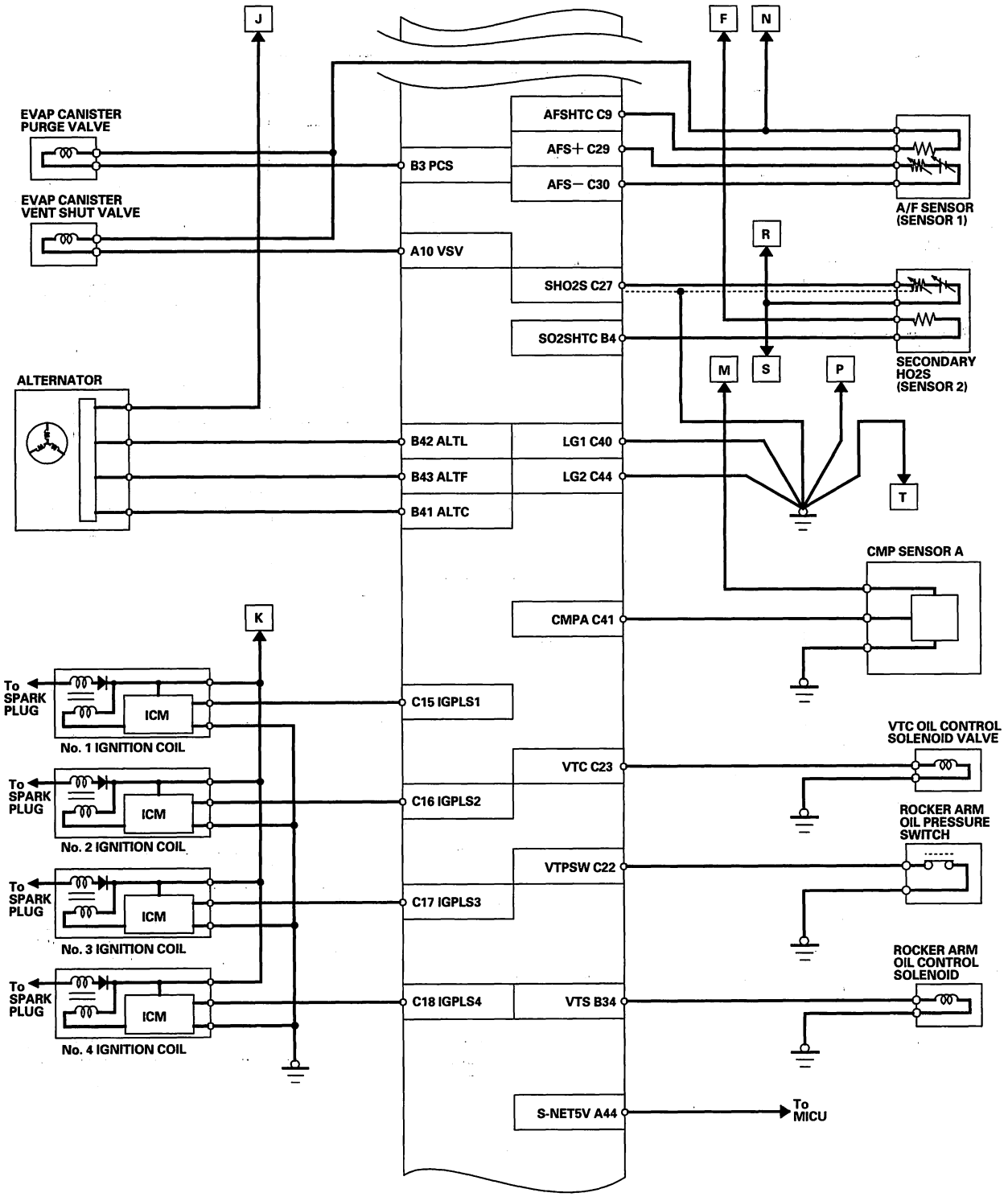




BACK

Protected by AR

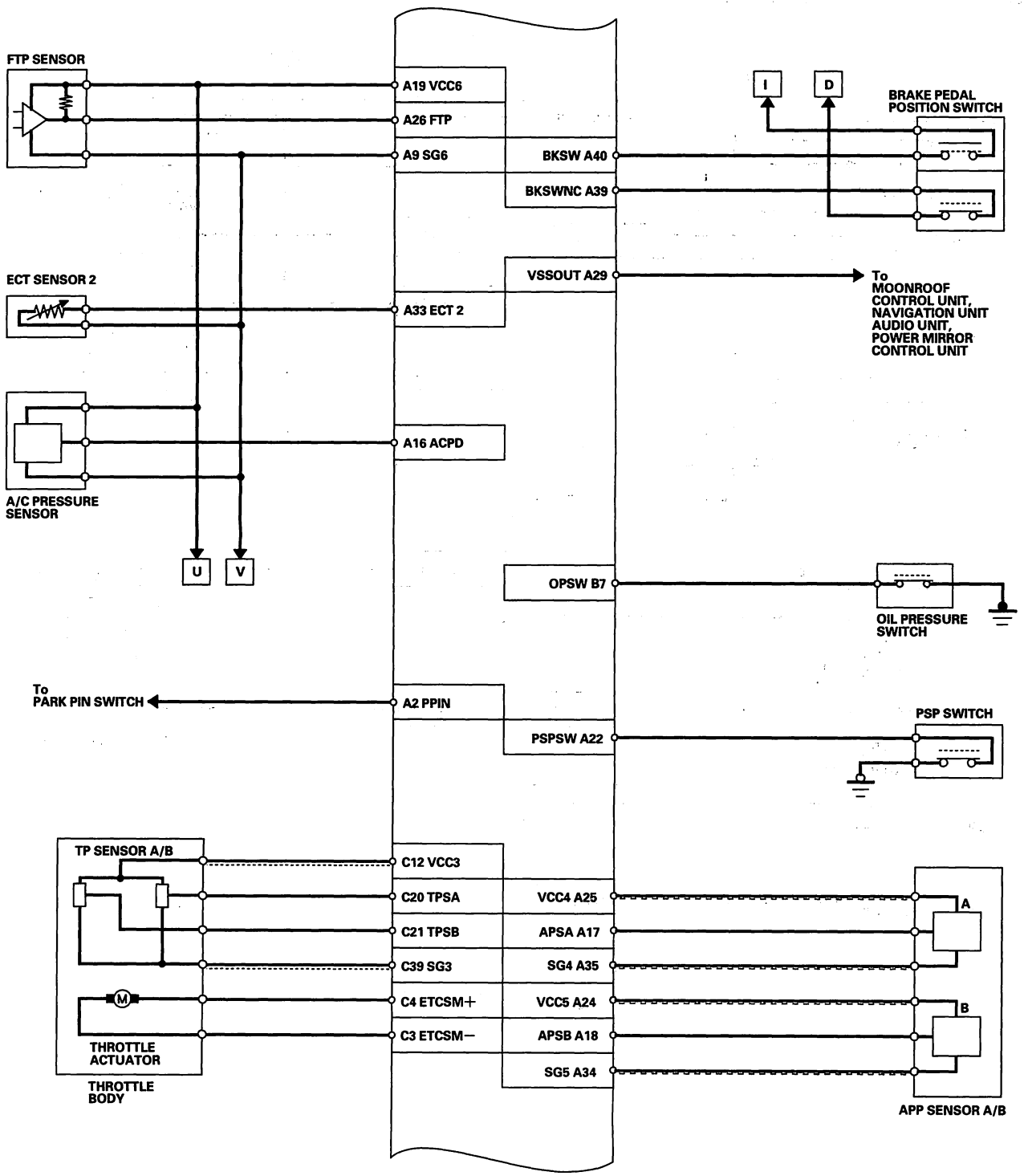


(cont'd)

Protected by AR



## System Description (cont'd)

### PCM Electrical Connections (cont'd)

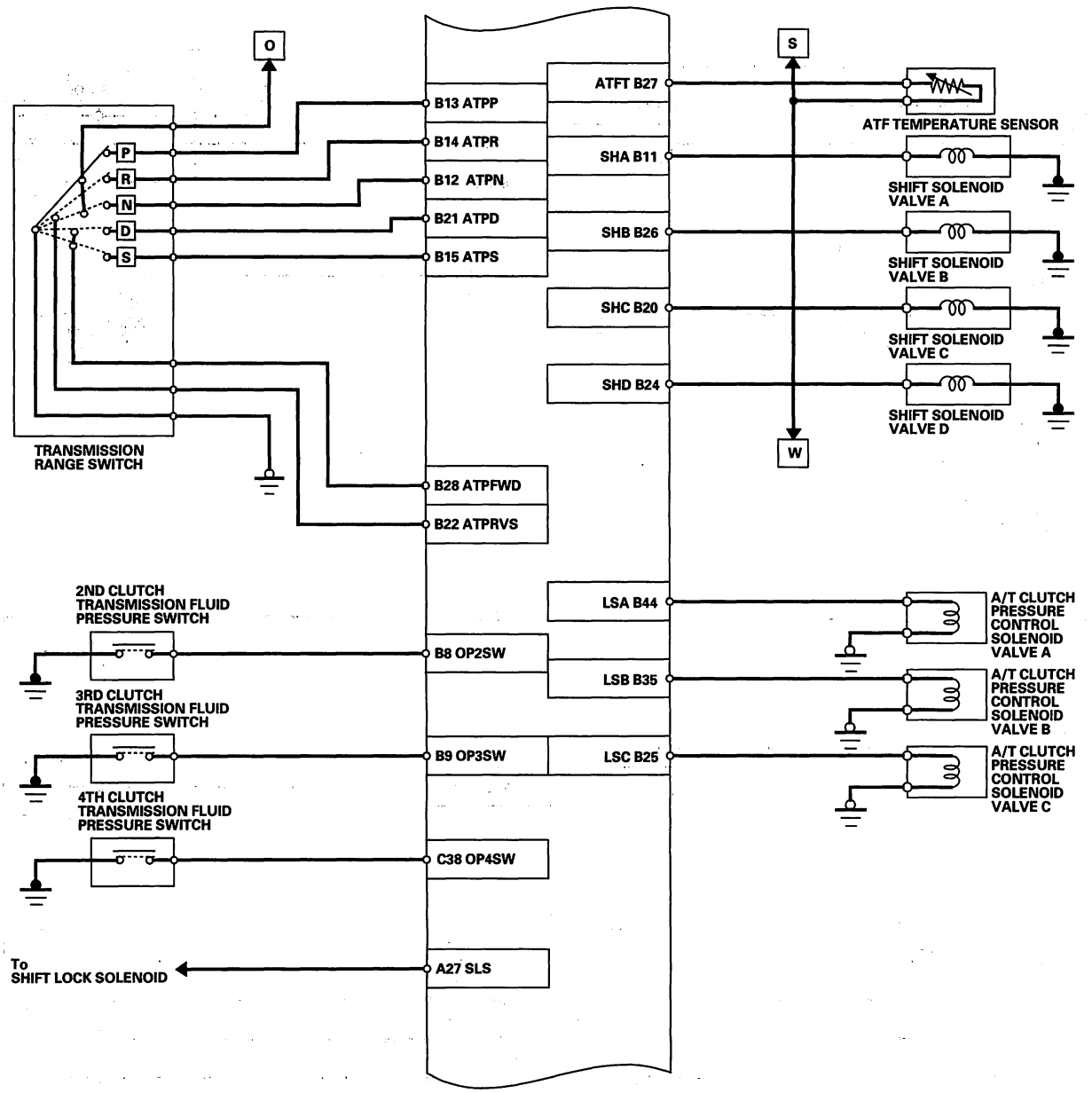




BACK

Protected by AR

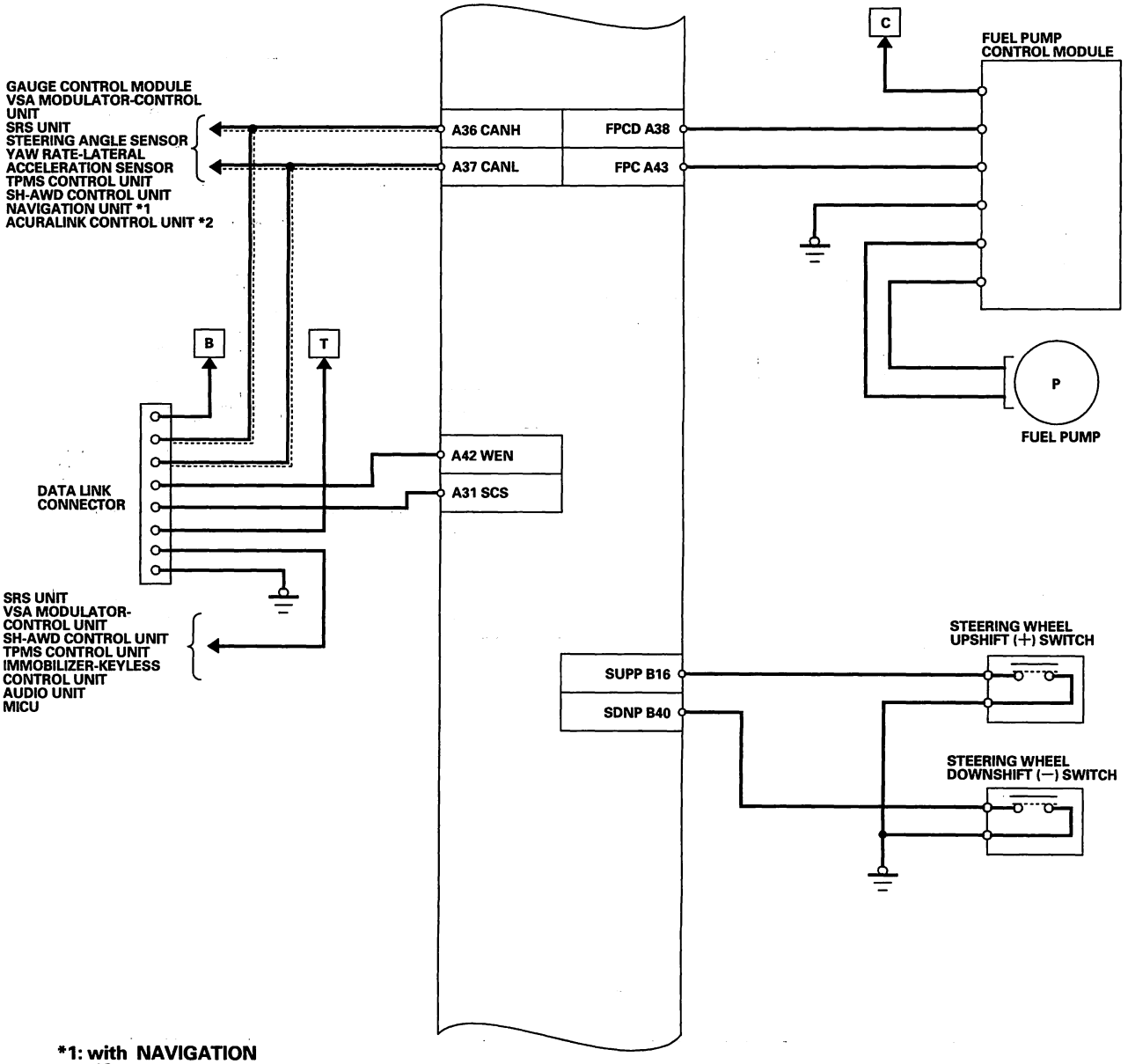


*1: with NAVIGATION
*2: USA with NAVIGATION

(cont'd)

Protected by AR



## System Description (cont'd)

### PCM Electrical Connections (cont'd)

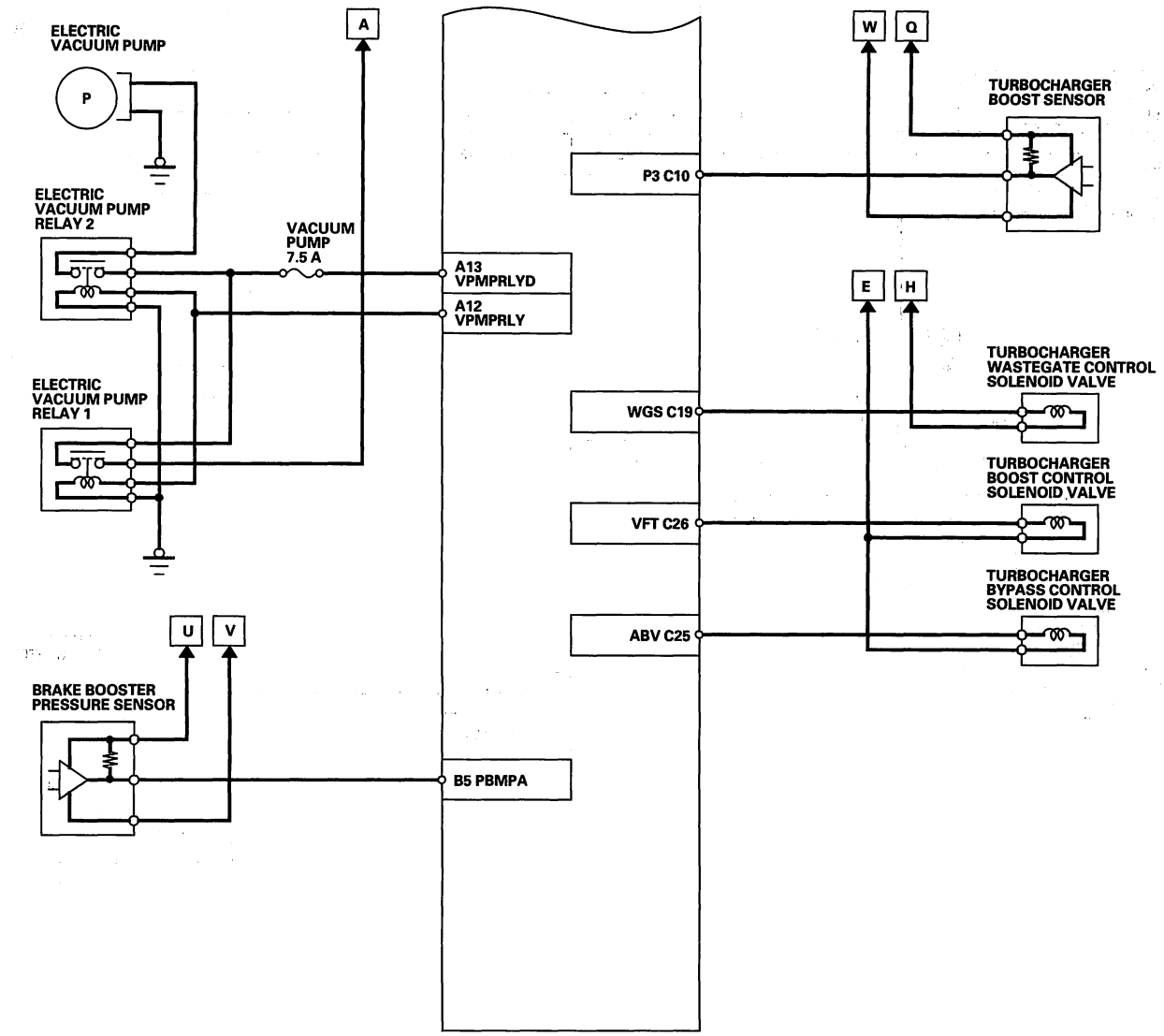


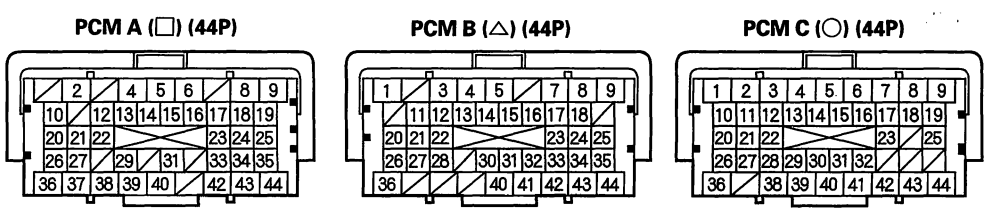


TERMINAL LOCATIONS



BACK

Protected by AR

## Vacuum/Pressure Hose Routing

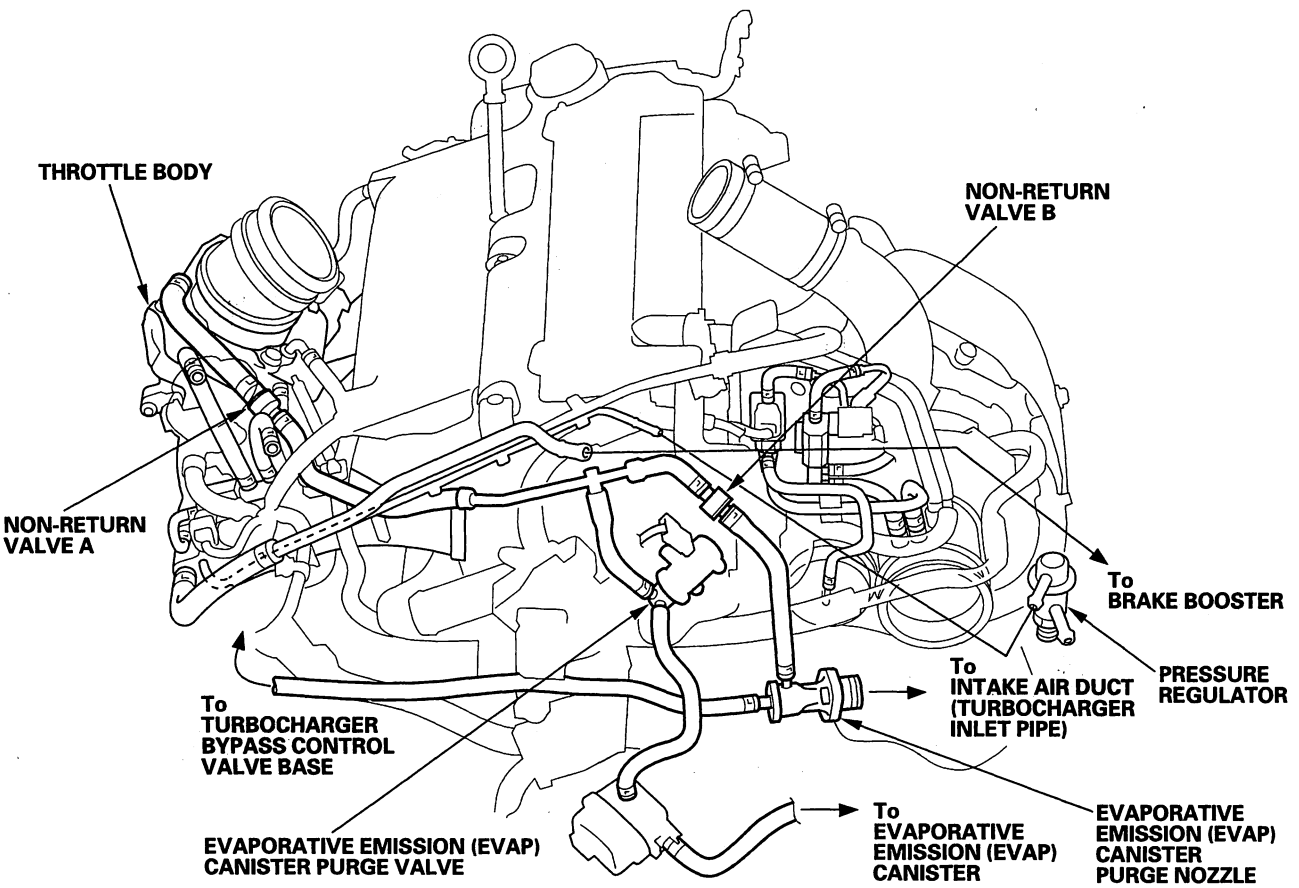


(cont'd)

Protected by AR



## System Description (cont'd)

### Vacuum/Pressure Hose Routing (cont'd)

FRONT VIEW

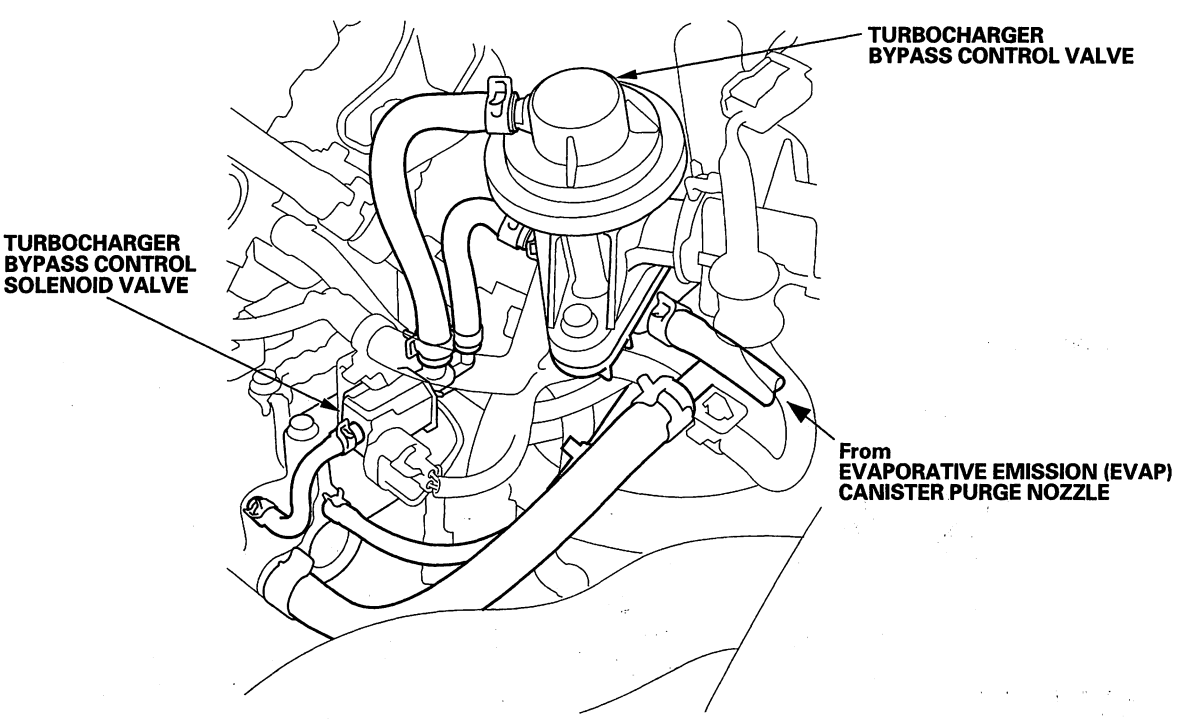


REAR VIEW

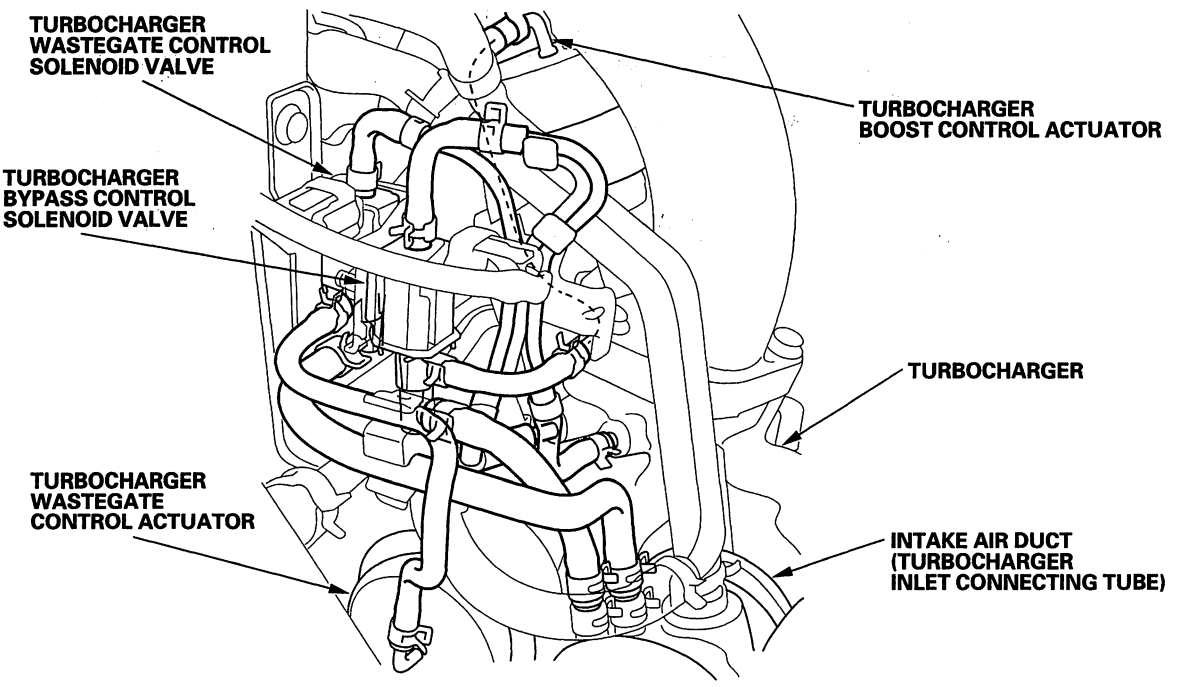




BACK

Protected by AR

## Vacuum/Pressure Distribution

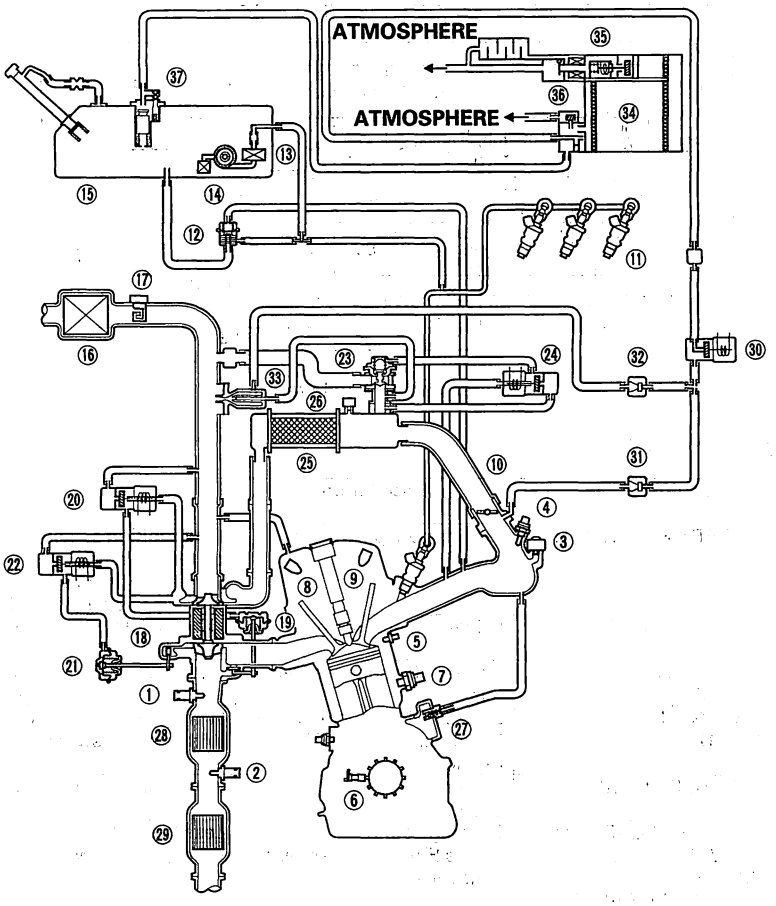


① AIR FUEL RATIO (A/F) SENSOR (SENSOR 1)
② SECONDARY HEATED OXYGEN SENSOR (SECONDARY HO2S) (SENSOR 2)
③ MANIFOLD ABSOLUTE PRESSURE (MAP) SENSOR
④ INTAKE AIR TEMPERATURE (IAT) SENSOR 2
⑤ ENGINE COOLANT TEMPERATURE (ECT) SENSOR 1
⑥ CRANKSHAFT POSITION (CKP) SENSOR
⑦ KNOCK SENSOR
⑧ CAMSHAFT POSITION (CMP) SENSOR A
⑨ CAMSHAFT POSITION (CMP) SENSOR B
⑩ THROTTLE BODY
⑪ INJECTOR
⑫ FUEL PRESSURE REGULATOR
⑬ FUEL FILTER
⑭ FUEL PUMP
⑮ FUEL TANK
⑯ AIR CLEANER
⑰ MASS AIR FLOW (MAF) SENSOR/ INTAKE AIR TEMPERATURE (IAT) SENSOR 1
⑱ TURBOCHARGER
⑲ TURBOCHARGER WASTEGATE CONTROL ACTUATOR
⑳ TURBOCHARGER WASTEGATE CONTROL SOLENOID VALVE
㉑ TURBOCHARGER BOOST CONTROL ACTUATOR
㉒ TURBOCHARGER BOOST CONTROL SOLENOID VALVE
㉓ TURBOCHARGER BYPASS CONTROL VALVE
㉔ TURBOCHARGER BYPASS CONTROL SOLENOID VALVE
㉕ CHARGER AIR COOLER
㉖ TURBOCHARGER BOOST SENSOR
㉗ POSITIVE CRANKCASE VENTILATION (PCV) VALVE
㉘ WARM UP THREE WAY CATALYTIC CONVERTER (WU-TWC)
㉙ UNDER FLOOR THREE WAY CATALYTIC CONVERTER
㉚ EVAPORATIVE EMISSION (EVAP) CANISTER PURGE VALVE
㉛ NON-RETURN VALVE A
㉜ NON-RETURN VALVE B
㉝ EVAPORATIVE EMISSION (EVAP) CANISTER PURGE NOZZLE
㉞ EVAPORATIVE EMISSION (EVAP) CANISTER
㉟ EVAPORATIVE EMISSION (EVAP) CANISTER VENT SHUT VALVE
㊱ FUEL TANK PRESSURE (FTP) SENSOR
㊲ FUEL TANK VAPOR CONTROL VALVE

(cont'd)

Protected by AR



## System Description (cont'd)

### PCM Inputs and Outputs at Connector A (□) (44P)

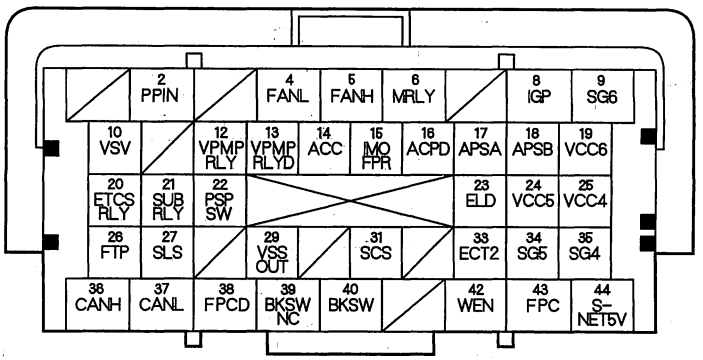


Terminal side of female terminals

NOTE: Standard battery voltage is about 12 V.

| Terminal number | Wire color | Terminal name | Description | Signal |
|---|---|---|---|---|
| 2 | LT GRN | PPIN (PARK PIN SWITCH) | Detects park pin switch signal | With ignition switch ON (II) in P position: battery voltage<br>With ignition switch ON (II) in any position other than P position: about 0 V |
| 4 | PUR | FANL (RADIATOR FAN CONTROL) | Drives radiator fan relay | With radiator fan running: about 0 V<br>With radiator fan stopped: battery voltage |
| 5 | GRY | FANH (RADIATOR FAN CONTROL) | Drives A/C condenser fan relay | With A/C condenser fan running: about 0 V<br>With A/C condenser fan stopped: battery voltage |
| 6 | GRN | MRLY (PGM-FI MAIN RELAY 1) | Drives PGM-FI main relay 1<br>Power source for DTC memory | With ignition switch ON (II): about 0 V<br>With ignition switch OFF: battery voltage |
| 8 | ORN | IGP (POWER SOURCE) | Power source for PCM circuit | With ignition switch ON (II): battery voltage |
| 9 | BLK | SG6 (SENSOR GROUND) | Sensor ground | Less than 1.0 V at all times |
| 10 | ORN | VSV (EVAPORATIVE EMISSION (EVAP) CANISTER VENT SHUT VALVE) | Drives EVAP canister vent shut valve | With ignition switch ON (II): battery voltage |
| 12 | WHT | VPMPRLY (VACUUM PUMP RELAY) | Drives electric vacuum pump relay | With electric vacuum pump OFF: about 0 V<br>With electric vacuum pump ON: about 14.0 V |
| 13 | PNK | VPMPRLYD (VACUUM PUMP RELAY SIGNAL LOAD) | Detects electric vacuum pump signal load | At idle with electric vacuum pump OFF: about 2.3 V<br>With electric vacuum pump ON: about 14.0 V |
| 14 | RED | ACC (A/C COMPRESSOR CLUTCH RELAY) | Drives A/C compressor clutch relay | With compressor ON: about 0 V<br>With compressor OFF: battery voltage |
| 15 | BRN | IMOFPR (IMMOBILIZER FUEL PUMP RELAY) | Drives PGM-FI main relay 2 (FUEL PUMP) | About 0 V for 2 seconds after turning ignition switch ON (II), then battery voltage |
| 16 | LT GRN | ACPD (A/C PRESSURE SENSOR) | Detects A/C pressure sensor signal | With A/C switch ON: about 1.7—4.8 V (depending on A/C pressure) |
| 17 | YEL | APSA (ACCELERATOR PEDAL POSITION (APP) SENSOR A) | Detects APP sensor A signal | With ignition switch ON (II) and accelerator pedal pressed: about 4.7 V<br>With ignition switch ON (II) and accelerator pedal released: about 1.0 V |
| 18 | PUR | APSB (ACCELERATOR PEDAL POSITION (APP) SENSOR B) | Detects APP sensor B signal | With ignition switch ON (II) and accelerator pedal pressed: about 2.3 V<br>With ignition switch ON (II) and accelerator pedal released: about 0.5 V |



BACK

Protected by AR

## PCM Inputs and Outputs at Connector A (□) (44P)

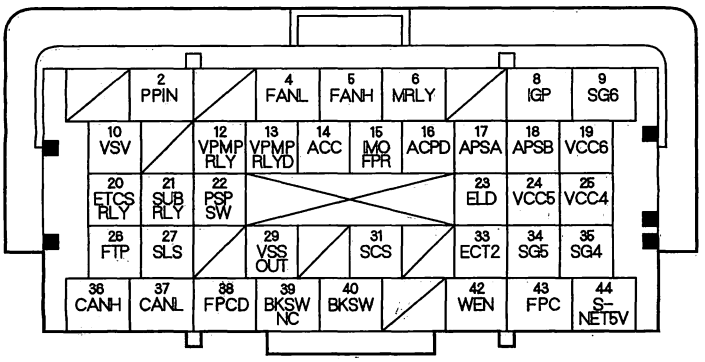


Terminal side of female terminals

NOTE: Standard battery voltage is about 12 V.

| Terminal number | Wire color | Terminal name | Description | Signal |
|---|---|---|---|---|
| 19 | RED | VCC6 (SENSOR VOLTAGE) | Provides sensor reference voltage | With ignition switch ON (II): about 5.0 V |
| 20 | YEL | ETCSRLY (ELECTRONIC THROTTLE CONTROL SYSTEM (ETCS) CONTROL RELAY) | Drives electronic throttle control system (ETCS) control relay | With ignition switch ON (II): about 0 V |
| 21 | RED | SUBRLY (PGM-FI SUBRELAY) | Drives PGM-FI subrelay | With ignition switch ON (II): about 0 V |
| 22 | BRN | PSPSW (POWER STEERING PRESSURE SWITCH SIGNAL) | Detects PSP switch signal | At idle with steering wheel in straight ahead position: about 0 V<br>At idle with steering wheel at full lock: battery voltage |
| 23 | ORN | ELD (ELECTRICAL LOAD DETECTOR (ELD)) | Detects ELD signal | With ignition switch ON (II): about 0.1—4.8 V (depending on electrical load) |
| 24 | GRY | VCC5 (SENSOR VOLTAGE) | Provides sensor reference voltage | With ignition switch ON (II): about 5.0 V |
| 25 | BRN | VCC4 (SENSOR VOLTAGE) | Provides sensor reference voltage | With ignition switch ON (II): about 5.0 V |
| 26 | LT GRN | FTP (FUEL TANK PRESSURE (FTP) SENSOR) | Detects FTP sensor signal | With ignition switch ON (II) and fuel fill cap removed: about 2.5 V |
| 27 | PNK | SLS (SHIFT LOCK SOLENOID) | Drives shift lock solenoid | With ignition switch ON (II), in P position, brake pedal pressed, and accelerator released: about 0 V |
| 29 | BLU | VSSOUT (VEHICLE SPEED SIGNAL OUTPUT) | Sends vehicle speed signal | Depending on vehicle speed: pulses |
| 31 | ORN | SCS (SERVICE CHECK SIGNAL) | Detects service check signal | With service check signal shorted using the HDS: about 0 V<br>With service check signal opened: about 5.0 V |
| 33 | RED | ECT2 (ENGINE COOLANT TEMPERATURE (ECT) SENSOR 2) | Detects ECT sensor 2 signal | With ignition switch ON (II): about 0.1—4.8 V (depending on engine coolant temperature) |
| 34 | LT BLU | SG5 (SENSOR GROUND) | Sensor ground | Less than 1.0 V at all times |
| 35 | BLU | SG4 (SENSOR GROUND) | Sensor ground | Less than 1.0 V at all times |
| 36 | WHT | CANH (CAN COMMUNICATION SIGNAL HIGH) | Sends communication signal | With ignition switch ON (II): about 2.5 V (pulses) |
| 37 | RED | CANL (CAN COMMUNICATION SIGNAL LOW) | Sends communication signal | With ignition switch ON (II): about 2.5 V (pulses) |

(cont'd)

Protected by AR



## System Description (cont'd)

### PCM Inputs and Outputs at Connector A (□) (44P)

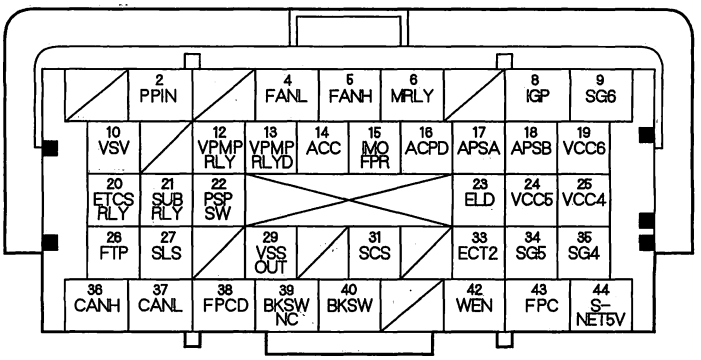


Terminal side of female terminals

NOTE: Standard battery voltage is about 12 V.

| Terminal number | Wire color | Terminal name | Description | Signal |
|---|---|---|---|---|
| 38 | BLU | FPCD (FUEL PUMP CONTROL MODULE DIAGNOSIS) | Detects fuel pump control diagnosis | With ignition switch ON (II): about 0 V<br>At idle: about 10.0 V |
| 39 | BRN | BKSWNC (BRAKE PEDAL POSITION SWITCH) | Detects brake pedal position switch signal | With ignition switch ON (II) and brake pedal released: battery voltage<br>With ignition switch ON (II) and brake pedal pressed: about 0 V |
| 40 | LT GRN | BKSW (BRAKE PEDAL POSITION SWITCH) | Detects brake pedal position switch signal | With brake pedal released: about 0 V<br>With brake pedal pressed: battery voltage |
| 42 | YEL | WEN (WRITE ENABLE SIGNAL) | Detects write enable signal | With ignition switch ON (II): about 0 V |
| 43 | GRN | FPC (FUEL PUMP CONTROL) | Detects fuel pump control signal | With ignition switch ON (II): pulses<br>With ignition switch OFF: about 0 V |
| 44 | PNK | S-NET5V (SERIAL COMMUNICATION FOR IMMOBILIZER) | Sends serial communication signal | With ignition switch ON (II): pulses<br>With ignition switch OFF: about 5.0 V |



BACK

Protected by AR

## PCM Inputs and Outputs at Connector B (△) (44P)

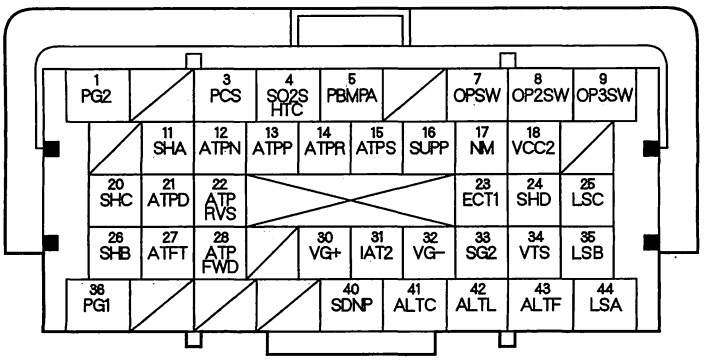


Terminal side of female terminals

NOTE: Standard battery voltage is about 12 V.

| Terminal number | Wire color | Terminal name | Description | Signal |
|---|---|---|---|---|
| 1 | BLK | PG2 (POWER GROUND) | Ground circuit for PCM circuit | Less than 1.0 V at all times |
| 3 | YEL/BLU | PCS (EVAPORATIVE EMISSION (EVAP) CANISTER PURGE VALVE) | Drives EVAP canister purge valve | With engine running, engine coolant below 140 °F (60 °C): battery voltage<br>With engine running, engine coolant above 140 °F (60 °C): duty controlled |
| 4 | BLK/WHT | SO2SHTC (SECONDARY HEATED OXYGEN SENSOR (SECONDARY HO2S) HEATER CONTROL (SENSOR 2)) | Drives secondary HO2S heater (sensor 2) | With ignition switch ON (II): battery voltage<br>With fully warmed up engine running: duty controlled |
| 5 | GRN/BLK | PBMPA (BRAKE BOOSTER PRESSURE) | Detects brake booster pressure sensor signal | With ignition switch ON (II) and brake pedal released: about 2.0 V |
| 7 | YEL/RED | OPSW (OIL PRESSURE SWITCH) | Detects engine oil pressure signal | With ignition switch ON (II): about 0 V<br>With engine running: battery voltage |
| 8 | BLU/RED | OP2SW (2ND CLUTCH TRANSMISSION FLUID PRESSURE SWITCH) | Detects 2nd clutch transmission fluid pressure switch input | With ignition switch ON (II):<br>Without 2nd clutch pressure: about 5.0 V<br>With 2nd clutch pressure: about 0 V |
| 9 | BLU/WHT | OP3SW (3RD CLUTCH TRANSMISSION FLUID PRESSURE SWITCH) | Detects 3rd clutch transmission fluid pressure switch input | With ignition switch ON (II):<br>Without 3rd clutch pressure: about 5.0 V<br>With 3rd clutch pressure: about 0 V |
| 11 | BLU/YEL | SHA (SHIFT SOLENOID VALVE A) | Drives shift solenoid valve A | With engine running in R, and D or S position (in 2nd and 3rd gears): battery voltage<br>With engine running in P, N position, and D or S position (in 1st, 4th and 5th gears): about 0 V |
| 12 | RED/BLK | ATPN (TRANSMISSION RANGE SWITCH NEUTRAL) | Detects transmission range switch N position signal input | In N position: about 0 V<br>In any position other than N: about 5.0 V |
| 13 | BLU/BLK | ATPP (TRANSMISSION RANGE SWITCH PARK) | Detects transmission range switch P position signal input | In P position: about 0 V<br>In any position other than P: battery voltage |
| 14 | WHT | ATPR (TRANSMISSION RANGE SWITCH R) | Detects transmission range switch R position signal input | In R position: about 0 V<br>In any position other than R: battery voltage |
| 15 | RED | ATPS (TRANSMISSION RANGE SWITCH S) | Detects transmission range switch S position signal input | In S position: about 0 V<br>In any position other than S: battery voltage |

(cont'd)

Protected by AR



## System Description (cont'd)

### PCM Inputs and Outputs at Connector B (△) (44P)

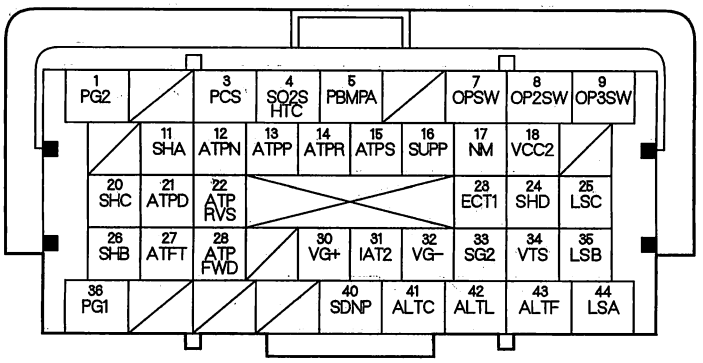


Terminal side of female terminals

NOTE: Standard battery voltage is about 12 V.

| Terminal number | Wire color | Terminal name | Description | Signal |
|---|---|---|---|---|
| 16 | WHT/BLU | SUPP (UPSHIFT SWITCH) | Detects steering wheel upshift switch (+) signal | With steering wheel upshift switch (+) pressed: about 0 V<br>With steering wheel upshift switch (+) not pressed: battery voltage |
| 17 | RED | NM (INPUT SHAFT (MAINSHAFT) SPEED SENSOR) | Detects input shaft (mainshaft) speed sensor signal | With ignition switch ON (II): about 0 V or about 5.0 V<br>With engine idling in N position: about 2.5 V (pulses) |
| 18 | YEL/BLU | VCC2 (SENSOR VOLTAGE) | Provides sensor reference voltage | With ignition switch ON (II): about 5.0 V |
| 20 | GRN | SHC (SHIFT SOLENOID VALVE C) | Drives shift solenoid valve C | With engine running in D or S position (in 1st, 3rd and 5th gears): battery voltage<br>With engine running in P, R, N positions, and D or S position (in 2nd and 4th gears): about 0 V |
| 21 | YEL | ATPD (TRANSMISSION RANGE SWITCH D) | Detects transmission range switch D position signal input | In D position: about 0 V<br>In any position other than D: battery voltage |
| 22 | RED/WHT | ATPRVS (TRANSMISSION RANGE SWITCH R) | Detects transmission range switch R position signal input | In R position: about 0 V<br>In any position other than R: battery voltage |
| 23 | RED/WHT | ECT1 (ENGINE COOLANT TEMPERATURE (ECT) SENSOR 1) | Detects ECT sensor 1 signal | With ignition switch ON (II): about 0.1—4.8 V (depending on engine coolant temperature) |
| 24 | YEL | SHD (SHIFT SOLENOID VALVE D) | Drives shift solenoid valve D | With engine running in N or D position (during lock-up condition): battery voltage<br>With engine running in P, R or D position (no lock-up condition): about 0 V |
| 25 | GRN/RED | LSC (A/T CLUTCH PRESSURE CONTROL SOLENOID VALVE C) | Drives A/T clutch pressure control solenoid valve C | With ignition switch ON (II): current controlled |
| 26 | GRN/WHT | SHB (SHIFT SOLENOID VALVE B) | Drives shift solenoid valve B | With engine running in P, R, N position, and D or S position (in 1st, 2nd and 5th gears): battery voltage<br>With engine running in D or S position (in 3rd and 4th gears): about 0 V |
| 27 | BLU/YEL | ATFT (ATF TEMPERATURE SENSOR) | Detects ATF temperature signal | With ignition switch ON (II): about 0.2—4.0 V (about 1.8 V at operating temperature) (depending on ATF temperature) |
| 28 | BLU/YEL | ATPFWD (TRANSMISSION RANGE SWITCH D and S POSITION) | Detects transmission range switch D and S positions signal | In D or S positions: about 0 V<br>In any other position: battery voltage |



BACK

Protected by AR

## PCM Inputs and Outputs at Connector B (△) (44P)

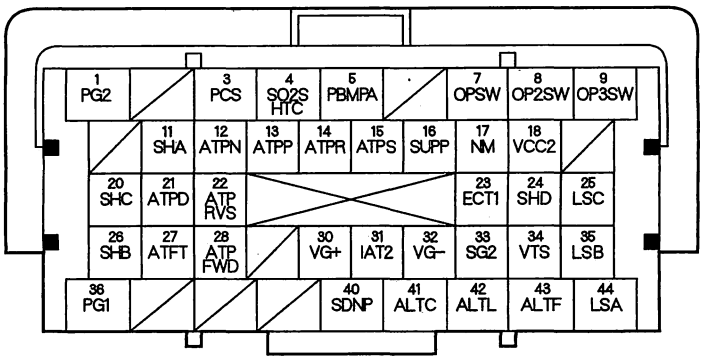


Terminal side of female terminals

NOTE: Standard battery voltage is about 12 V.

| Terminal number | Wire color | Terminal name | Description | Signal |
|---|---|---|---|---|
| 30 | RED/GRN | VG+ (MASS AIR FLOW (MAF) SENSOR +SIDE) | Detects MAF sensor signal | At idle: 1.1—1.6 V (between VG+ terminal and VG− terminal) |
| 31 | RED/YEL | IAT 2 (INTAKE AIR TEMPERATURE (IAT) 2 SENSOR) | Detects IAT 2 sensor signal | With ignition switch ON (II): about 0.1—4.0 V |
| 32 | BLK/RED | VG− (MASS AIR FLOW (MAF) SENSOR −SIDE) | Ground for MAF sensor signal | |
| 33 | GRN/YEL | SG2 (SENSOR GROUND) | Sensor ground | Less than 1.0 V at all times |
| 34 | GRN/YEL | VTS (ROCKER ARM OIL CONTROL SOLENOID) | Drives rocker arm oil control solenoid | At idle: about 0 V |
| 35 | BRN/WHT | LSB (A/T CLUTCH PRESSURE CONTROL SOLENOID VALVE B) | Drives A/T clutch pressure control solenoid valve B | With ignition switch ON (II): current controlled |
| 36 | BLK | PG1 (POWER GROUND) | Ground circuit for PCM circuit | Less than 1.0 V at all times |
| 40 | BRN/WHT | SDNP (DOWNSHIFT SWITCH) | Detects steering wheel downshift switch (−) signal | With steering wheel downshift switch (−) pressed: about 0 V<br>With steering wheel downshift switch (−) not pressed: about 5.0 V |
| 41 | WHT/GRN | ALTC (ALTERNATOR CONTROL) | Sends alternator control signal | With fully warmed up engine running: 5.0 V (depending on electrical load) |
| 42 | WHT/BLU | ALTL (ALTERNATOR L SIGNAL) | Detects alternator L signal | With ignition switch ON (II): about 0 V<br>With engine running: battery voltage |
| 43 | WHT/RED | ALTF (ALTERNATOR FR SIGNAL) | Detects alternator FR signal | With engine running: about 2.6—3.4 V (depending on electrical load) |
| 44 | RED | LSA (A/T CLUTCH PRESSURE CONTROL SOLENOID VALVE A) | Drives A/T clutch pressure control solenoid valve A | With ignition switch ON (II): current controlled |

(cont'd)

Protected by AR



## System Description (cont'd)

### PCM Inputs and Outputs at Connector C (○) (44P)

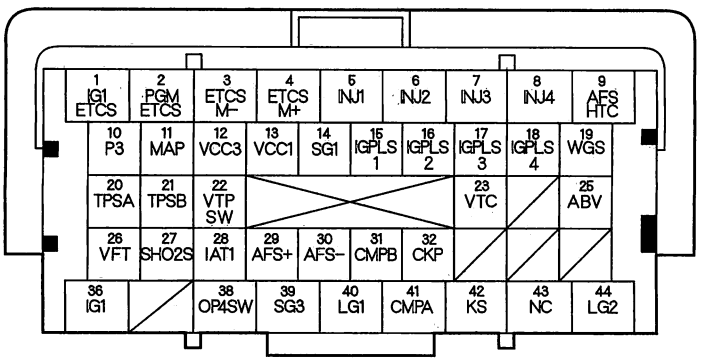


Terminal side of female terminals

NOTE: Standard battery voltage is about 12 V.

| Terminal number | Wire color | Terminal name | Description | Signal |
|---|---|---|---|---|
| 1 | YEL/GRN | IG1ETCS (IGNITION SIGNAL ETCS) | Detects ignition signal | With ignition switch ON (II): battery voltage |
| 2 | BLK | PGMETCS (POWER GROUND ETCS) | Ground circuit for PCM circuit | Less than 1.0 V at all times |
| 3 | GRN | ETCSM− (THROTTLE ACTUATOR −SIDE) | Ground for throttle actuator | With ignition switch ON (II): about 0 V |
| 4 | BLU | ETCSM+ (THROTTLE ACTUATOR +SIDE) | Drives throttle actuator | With ignition switch ON (II): about 0 V |
| 5 | BRN | INJ1 (No. 1 INJECTOR) | Drives No. 1 injector | At idle: duty controlled<br>With ignition switch ON (II): battery voltage |
| 6 | RED | INJ2 (No. 2 INJECTOR) | Drives No. 2 injector | |
| 7 | BLU | INJ3 (No. 3 INJECTOR) | Drives No. 3 injector | |
| 8 | YEL | INJ4 (No. 4 INJECTOR) | Drives No. 4 injector | |
| 9 | GRN | AFSHTC (AIR FUEL RATIO (A/F) SENSOR HEATER CONTROL (SENSOR 1)) | Drives A/F sensor heater (sensor 1) | With ignition switch ON (II): battery voltage<br>With fully warmed up engine running: duty controlled |
| 10 | GRN | P3 (TURBOCHARGER BOOST SENSOR) | Detects turbocharger boost sensor | At idle: about 0 V |
| 11 | GRN/RED | MAP (MANIFOLD ABSOLUTE PRESSURE (MAP) SENSOR) | Detects MAP sensor signal | With ignition switch ON (II): about 2.0 V<br>At idle: about 1.0 V (depending on engine speed) |
| 12 | BLU | VCC3 (SENSOR VOLTAGE) | Provides sensor reference voltage | With ignition switch ON (II): about 5.0 V |
| 13 | YEL/RED | VCC1 (SENSOR VOLTAGE) | Provides sensor reference voltage | With ignition switch ON (II): about 5.0 V |
| 14 | GRN/WHT | SG1 (SENSOR GROUND) | Sensor ground | Less than 1.0 V at all times |
| 15 | YEL/GRN | IGPLS1 (No. 1 IGNITION COIL PULSE) | Drives No. 1 ignition coil | With ignition switch ON (II): about 0 V<br>With engine running: pulses |
| 16 | BLU/RED | IGPLS2 (No. 2 IGNITION COIL PULSE) | Drives No. 2 ignition coil | |
| 17 | WHT/BLU | IGPLS3 (No. 3 IGNITION COIL PULSE) | Drives No. 3 ignition coil | |
| 18 | BRN | IGPLS4 (No. 4 IGNITION COIL PULSE) | Drives No. 4 ignition coil | |
| 19 | RED/WHT | WGS (TURBOCHARGER WASTEGATE CONTROL SOLENOID VALVE) | Drives turbocharger wastegate control solenoid valve | With ignition switch ON (II): battery voltage<br>With engine running: duty controlled |
| 20 | RED/BLK | TPSA (THROTTLE POSITION (TP) SENSOR A) | Detects TP sensor A signal | With throttle fully open: about 1.8 V<br>With throttle fully closed: about 0.9 V |
| 21 | RED/BLU | TPSB (THROTTLE POSITION (TP) SENSOR B) | Detects TP sensor B signal | With throttle fully open: about 4.1 V<br>With throttle fully closed: about 1.7 V |



BACK

Protected by AR

## PCM Inputs and Outputs at Connector C (○) (44P)

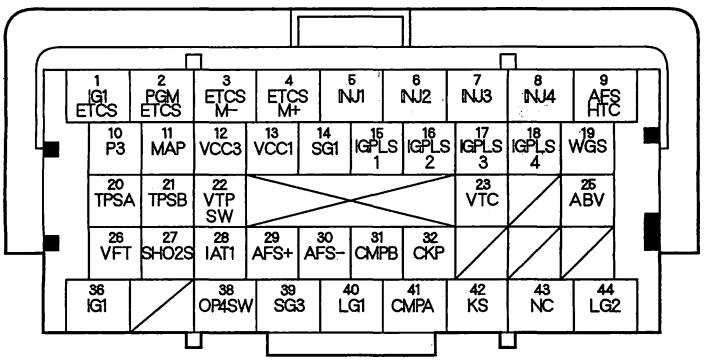


Terminal side of female terminals

NOTE: Standard battery voltage is about 12 V.

| Terminal number | Wire color | Terminal name | Description | Signal |
|---|---|---|---|---|
| 22 | BLU/BLK | VTPSW (ROCKER ARM OIL PRESSURE SWITCH) | Detects rocker arm oil pressure switch signal | With engine at low speed: about 0 V<br>With engine at high speed: battery voltage |
| 23 | BLU/WHT | VTC (VTC OIL CONTROL SOLENOID VALVE) | Drives VTC oil control solenoid valve | With ignition switch ON (II): about 0 V |
| 25 | BLU/YEL | ABV (TURBOCHARGER BYPASS CONTROL SOLENOID VALVE) | Drives turbocharger bypass control solenoid valve | With ignition switch ON (II): battery voltage<br>With engine running: duty controlled |
| 26 | YEL/RED | VFT (TURBOCHARGER BOOST CONTROL SOLENOID) | Drives turbocharger boost control solenoid valve | With ignition switch ON (II): battery voltage<br>With engine running: duty controlled |
| 27 | WHT/RED | SHO2S (SECONDARY HEATED OXYGEN SENSOR (SECONDARY HO2S) (SENSOR 2) | Detects secondary HO2S (sensor 2) signal | With throttle fully opened at idle and fully warmed up engine: about 0.6 V<br>With throttle quickly closed: below 0.4 V |
| 28 | RED/YEL | IAT1 (INTAKE AIR TEMPERATURE (IAT) SENSOR 1) | Detects IAT sensor 1 signal | With ignition switch ON (II): about 0.1—4.0 V |
| 29 | RED | AFS+ (AIR FUEL RATIO (A/F) SENSOR (SENSOR 1) +SIDE) | Detects A/F sensor (sensor 1) signal | |
| 30 | RED/YEL | AFS− (AIR FUEL RATIO (A/F) SENSOR (SENSOR 1) −SIDE) | Detects A/F sensor (sensor 1) signal | |
| 31 | GRN | CMPB (CAMSHAFT POSITION (CMP) SENSOR B) | Detects CMP sensor B signal | With engine running: pulses |
| 32 | BLU | CKP (CRANKSHAFT POSITION (CKP) SENSOR) | Detects CKP sensor signal | With engine running: pulses |
| 36 | BLK/YEL | IG1 (IGNITION SIGNAL) | Detects ignition signal | With ignition switch ON (II): battery voltage |
| 38 | BLU/YEL | OP4SW (4TH CLUTCH TRANSMISSION FLUID PRESSURE SWITCH) | Detects 4th clutch transmission fluid pressure switch input | With ignition switch ON (II):<br>without 4th clutch pressure: about 5.0 V<br>With 4th clutch pressure: about 0 V |

(cont'd)

Protected by AR



## System Description (cont'd)

### PCM Inputs and Outputs at Connector C (○) (44P)

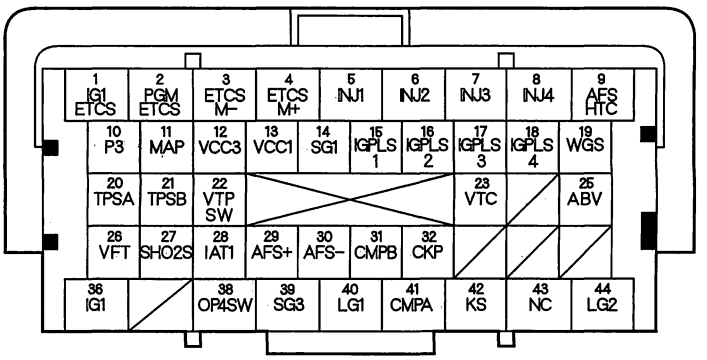


Terminal side of female terminals

NOTE: Standard battery voltage is about 12 V.

| Terminal number | Wire color | Terminal name | Description | Signal |
|---|---|---|---|---|
| 39 | GRN | SG3 (SENSOR GROUND) | Sensor ground | Less than 1.0 V at all times |
| 40 | BRN/YEL | LG1 (LOGIC GROUND) | Ground circuit for PCM circuit | Less than 1.0 V at all times |
| 41 | BLU/WHT | CMPA (CAMSHAFT POSITION (CMP) SENSOR A) | Detects CMP sensor A signal | With engine running: pulses |
| 42 | RED/BLU | KS (KNOCK SENSOR) | Detects knock sensor signal | With engine knocking: pulses |
| 43 | BLK/BLU | NC (OUTPUT SHAFT (COUNTERSHAFT) SPEED SENSOR) | Detects output shaft (countershaft) speed sensor signals | With ignition switch ON (II): pulses<br>With vehicle moving: about 5.0 V (pulses) |
| 44 | BRN/YEL | LG2 (LOGIC GROUND) | Ground circuit for PCM circuit | Less than 1.0 V at all times |



BACK

Protected by AR

## PGM-FI System

The programmed fuel injection (PGM-FI) system is a sequential multiport fuel injection system.

**Air Conditioning (A/C) Compressor Clutch Relay**
When the PCM receives a demand for cooling from the A/C system, it delays the compressor from being energized, and enriches the mixture to assure smooth transition to the A/C mode.

**Air Fuel Ratio (A/F) Sensor**
The A/F sensor operates over a wide air/fuel range. The A/F sensor is installed upstream of the warm up three way catalytic converter (WU-TWC), and sends signals to the PCM which varies the duration of fuel injection accordingly.

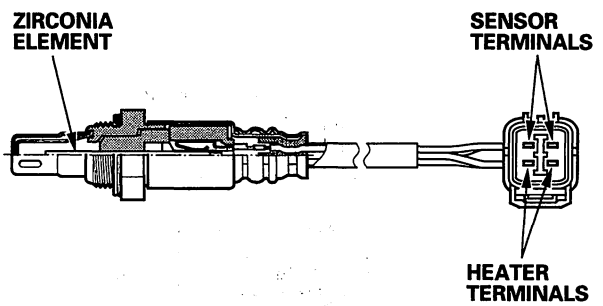


**Barometric Pressure (BARO) Sensor**
The BARO sensor is inside the PCM. It converts atmospheric pressure into a voltage signal that modifies the basic duration of the fuel injection discharge.

**Camshaft Position (CMP) Sensor B**
CMP sensor B detects the position of the No. 1 cylinder as a reference for sequential fuel injection to each cylinder.

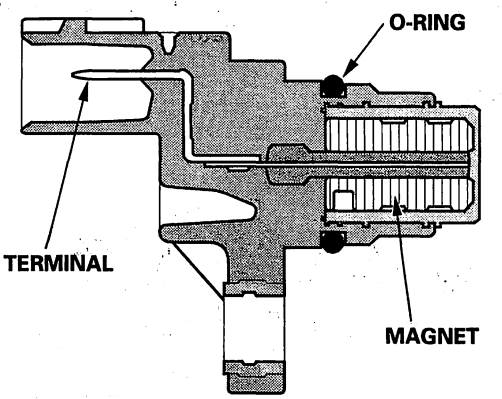


**Crankshaft Position (CKP) Sensor**
The CKP sensor detects crankshaft speed and is used by the PCM to determine ignition timing and timing for fuel injection of each cylinder as well as detecting engine misfire.

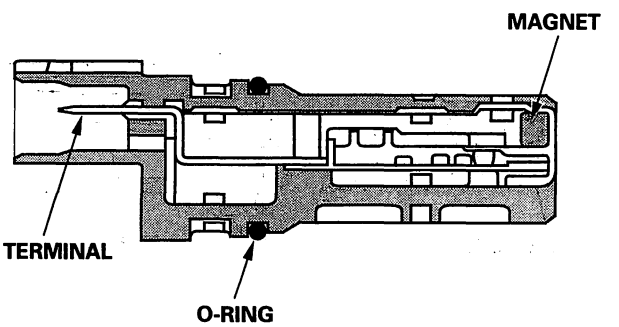


(cont'd)

Protected by AR



## System Description (cont'd)

**Engine Coolant Temperature (ECT) Sensors 1 and 2**
ECT sensors 1 and 2 are temperature dependent resistor (thermistor). The resistance decreases as the engine coolant temperature increases.
ECT sensors 1 is installed to the cylinder head, and ECT sensor 2 is installed to the radiator.

**ECT sensor 1**

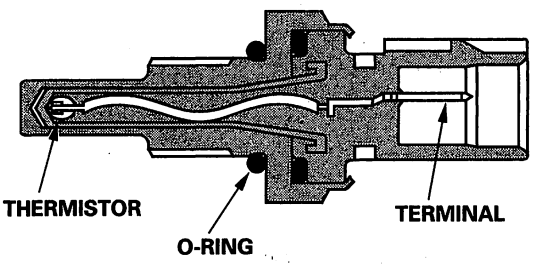


**ECT sensor 2**

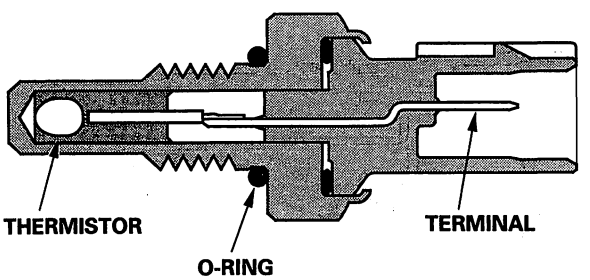


**Ignition Timing Control**
The PCM contains the memory for basic ignition timing at various engine speeds and manifold absolute pressure. It also adjusts the timing according to engine coolant temperature and intake air temperature.

**Injector Timing and Duration**
The PCM contains the memory for basic discharge duration at various engine speeds and manifold pressures. The basic discharge duration, after being read out from the memory, is further modified by signals sent from various sensors to obtain the final discharge duration.
By monitoring long term fuel trim, the PCM detects long term malfunctions in the fuel system and sets a diagnostic trouble code (DTC).

**Knock Sensor**
The knock control system adjusts the ignition timing to minimize knock.

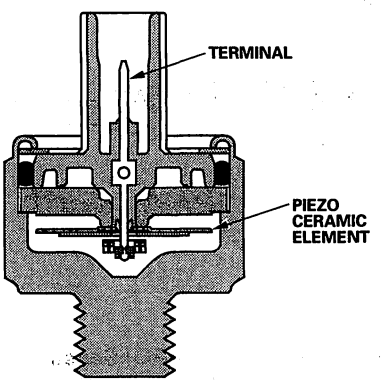


**Manifold Absolute Pressure (MAP) Sensor**
The MAP sensor converts manifold absolute pressure into electrical signals to the PCM.

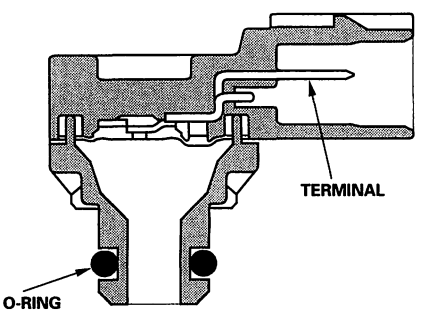




BACK

Protected by AR

**Malfunction Indicator Lamp (MIL) Indication (In relation to Readiness Codes)**
The vehicle has certain "readiness codes" that are part of the on-board diagnostics for the emissions systems. If the vehicle's battery has been disconnected or gone dead, if the DTCs have been cleared, or if the PCM has been reset, these codes are reset. In some states, part of the emissions testing is to make sure these codes are set to complete. If all of them are not set to complete, the vehicle may fail the test, or the test cannot be finished.

To check if the readiness codes are set to complete, turn the ignition switch ON (II), but do not start the engine. The MIL will come on for 15—20 seconds. If it then goes off, the readiness codes are complete. If it flashes five times, one or more readiness codes are not complete. To set each code, drive the vehicle or run the engine as described in the procedures (see page 11-76).

**Mass Air Flow (MAF) Sensor/Intake Air Temperature (IAT) Sensor 1**
The mass air flow (MAF) sensor/intake air temperature (IAT) sensor contains a hot wire and a thermistor. It is located in the intake air passage. The resistance of the hot wire and thermistor change due to intake air flow and air temperature. The control circuit in the MAF sensor controls the current to keep the hot wire at a set temperature. The current is converted to voltage in the control circuit, then output to the PCM.

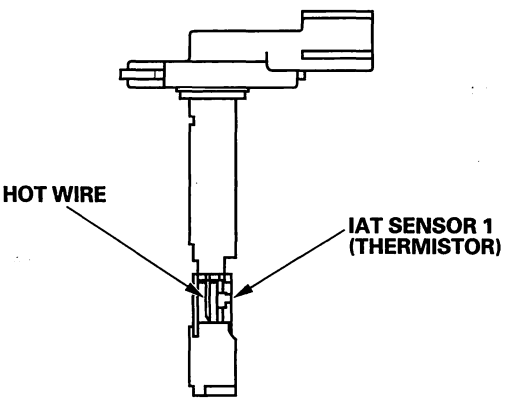


**Intake Air Temperature (IAT) Sensor 2**
The IAT sensor 2 is a temperature dependent resistor (thermistor). The resistance of the thermistor decreases as the intake air temperature increases.

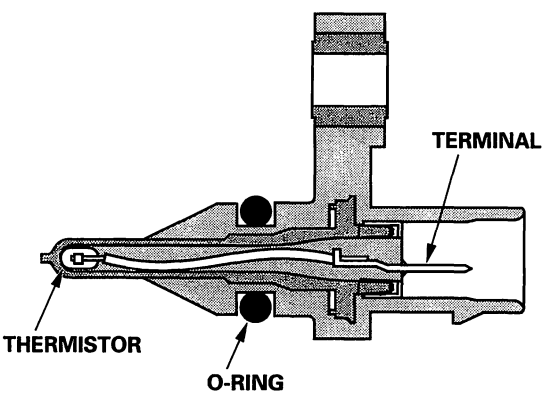


(cont'd)

Protected by AR



## System Description (cont'd)

**Secondary Heated Oxygen Sensor (Secondary HO2S)**
The secondary HO2S detects the oxygen content in the exhaust gas downstream of the warm up three way catalytic converter (WU-TWC), and sends signals to the PCM which varies the duration of fuel injection accordingly. To stabilize its output, the sensor has an internal heater. The PCM compares the HO2S output with the A/F sensor output to determine catalyst efficiency. The secondary HO2S is located on the WU-TWC.

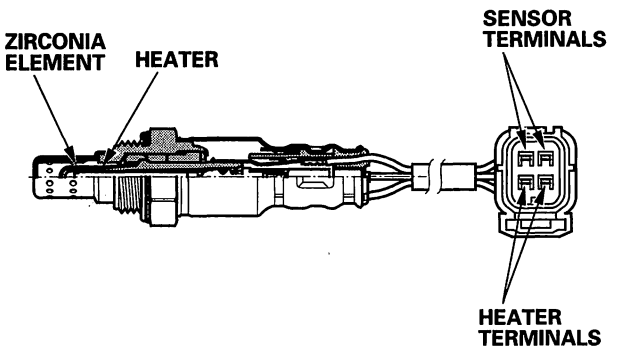


### Electronic Throttle Control System

The throttle is electronically controlled by the electronic throttle control system. Refer to the system diagram to see the functional layout of the system.

Idle control: When the engine is idling, the PCM controls the throttle actuator to maintain the proper idle speed according to engine loads.

Acceleration control: When the accelerator pedal is pressed, the PCM opens the throttle valve depending on the accelerator pedal position (APP) sensor signal.

Cruise control: The PCM controls the throttle actuator to maintain set speed when the cruise control is operating. The throttle actuator takes the place of the cruise control actuator.

**Accelerator Pedal Position (APP) Sensor**
As the accelerator pedal position changes, the sensor varies the signal voltage to the PCM.

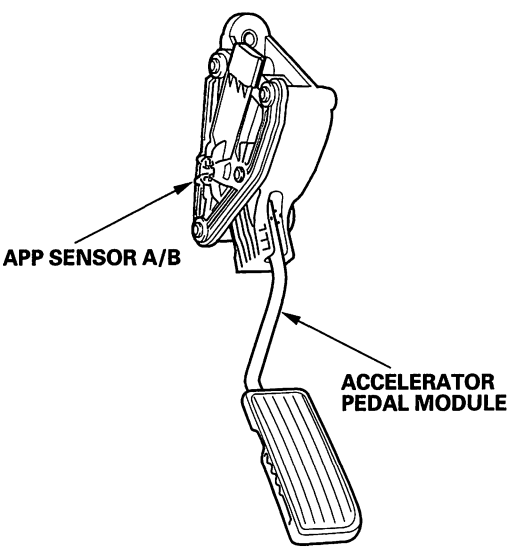




BACK

Protected by AR

**Throttle Body**
The throttle body is a single-barrel side draft type. The lower portion of the throttle valve is heated by engine coolant from the cylinder head to prevent icing of the throttle plate.

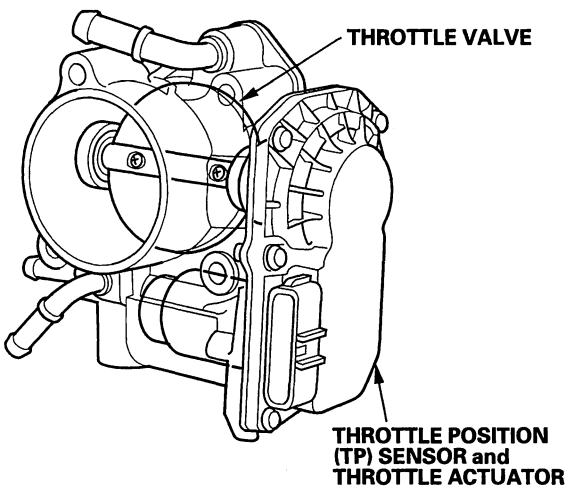


## Idle Control System

When the engine is cold, the A/C compressor is on, the transmission is in gear, the brake pedal is pressed, the power steering load is high, or the alternator is charging, the PCM controls current to the throttle actuator to maintain the correct idle speed.

**Brake Pedal Position Switch**
The brake pedal position switch signals the PCM when the brake pedal is pressed.

**Power Steering Pressure (PSP) Switch**
The PSP switch signals the PCM when the power steering load is high.

## Fuel Supply System

**Fuel Cutoff Control**
During deceleration with the throttle valve closed, current to the injectors is cut off to improve fuel economy at engine speeds over 850 rpm. Fuel cutoff control also occurs when the engine speed exceeds 6,900 rpm, regardless of the position of the throttle valve, to protect the engine from over-revving. When the vehicle is stopped, the PCM cuts the fuel at engine speeds over 5,000 rpm. Engine speed of fuel cut is lower on a cold engine.

**Fuel Pump Control**
When the ignition is turned on, the PCM grounds PGM-FI main relay 2 (FUEL PUMP) which feeds current to the fuel pump (fuel pump control module) for 2 seconds to pressurize the fuel system. With the engine running, the PCM grounds PGM-FI main relay 2 (FUEL PUMP) and feeds current to the fuel pump (fuel pump control module). When the engine is not running and the ignition is on, the PCM cuts ground to PGM-FI main relay 2 (FUEL PUMP) which cuts current to the fuel pump (fuel pump control module).

**PGM-FI Main Relay 1 and 2**
PGM-FI main relay 1 is energized whenever the ignition switch is ON (II) to supply battery voltage to the PCM, power to the injectors, and power for PGM-FI main relay 2 (FUEL PUMP). PGM-FI main relay 2 (FUEL PUMP) is energized to supply power to the fuel pump (fuel pump control module) for 2 seconds when the ignition switch is turned ON (II), and when the engine is cranking or running.

**Transfer Fuel Pump**
The fuel in the right side of the fuel tank is drawn over to the left side by the transfer fuel pump.

(cont'd)

Protected by AR



## System Description (cont'd)

### VTEC/VTC

- The i-VTEC has a variable valve timing control (VTC) mechanism on the intake camshaft in addition to the usual VTEC.
  This mechanism improves fuel efficiency and reduces exhaust emissions at all levels of engine speed, vehicle speed, and engine load.
- The VTEC mechanism changes the valve lift and timing by using more than one cam profile.
- The VTC changes the phase of the intake camshaft via oil pressure. It changes the intake valve timing continuously.

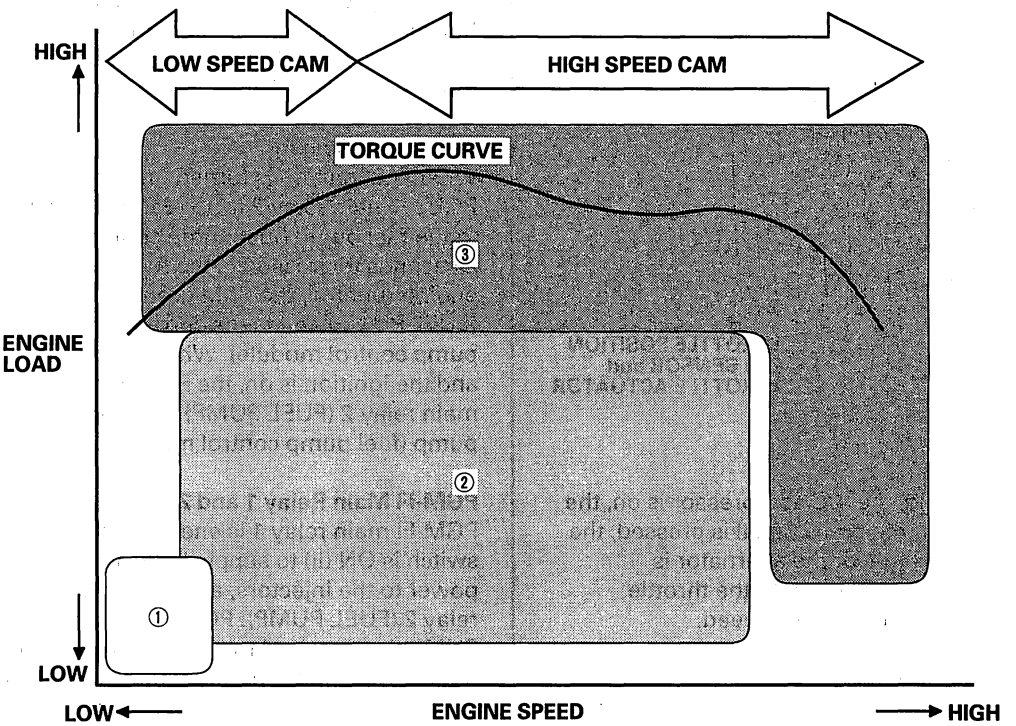


| Driving Condition | VTC Control | Description |
|---|---|---|
| ① Light-load | Base Position | For stable combustion the cam angle is retarded, and reduces the entry of exhaust gas into the cylinder. |
| ② Medium/high-load | Advance Control | Cam phase angle is controlled to optimize valve timing, improving fuel efficiency and reducing emissions. |
| ③ High speed | Advance-Base Position | To reduce the pumping loss, the intake valve is closed quickly. This helps the entry of fuel air mixture by the charging effect, and maximizes engine power. |



BACK

Protected by AR

**VTC System**

- The VTC system makes continuous intake valve timing changes based on operating conditions.
- Intake valve timing is optimized to allow the engine to produce maximum power.
- Cam angle is advanced to obtain EGR effect and reduce pumping loss. The intake valve is closed quickly to reduce the entry of the air/fuel mixture into the intake port and improve the charging effect.
- The system reduces the cam advance at idle, stabilizes combustion, and reduces engine speed.
- If a malfunction occurs, the VTC system control is disabled and the valve timing is fixed at the fully retarded position.

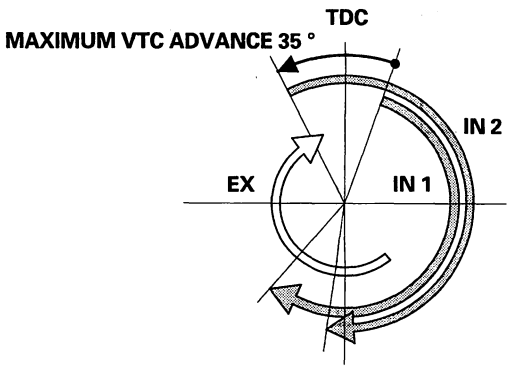


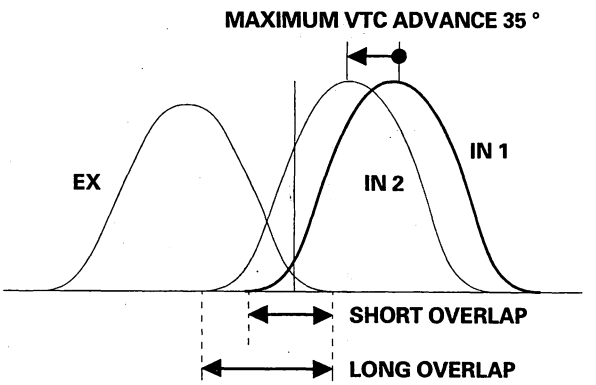


**VTEC System**

- The VTEC system changes the one side of the intake side cam profile to correspond to the engine speed. It maximizes torque at low engine speed and output at high engine speed.
- The low lift cam is used by one side of the intake valves at a low engine speed. At high engine speed, both intake valves uses the high lift cam.

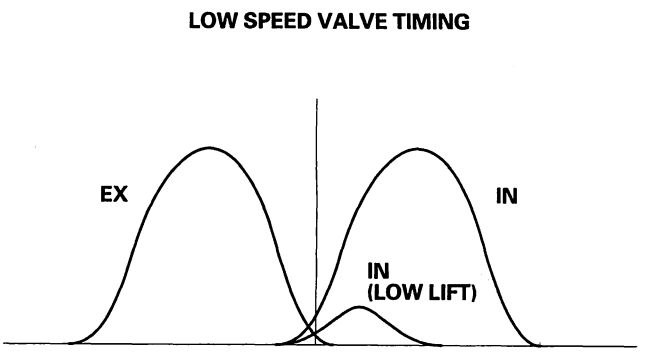


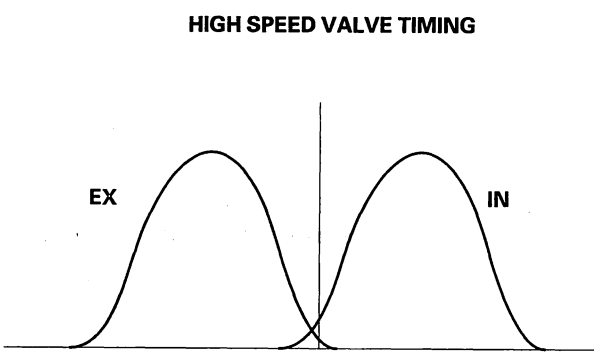


(cont'd)

Protected by AR



## System Description (cont'd)

### VTEC/VTC

**System Diagram**

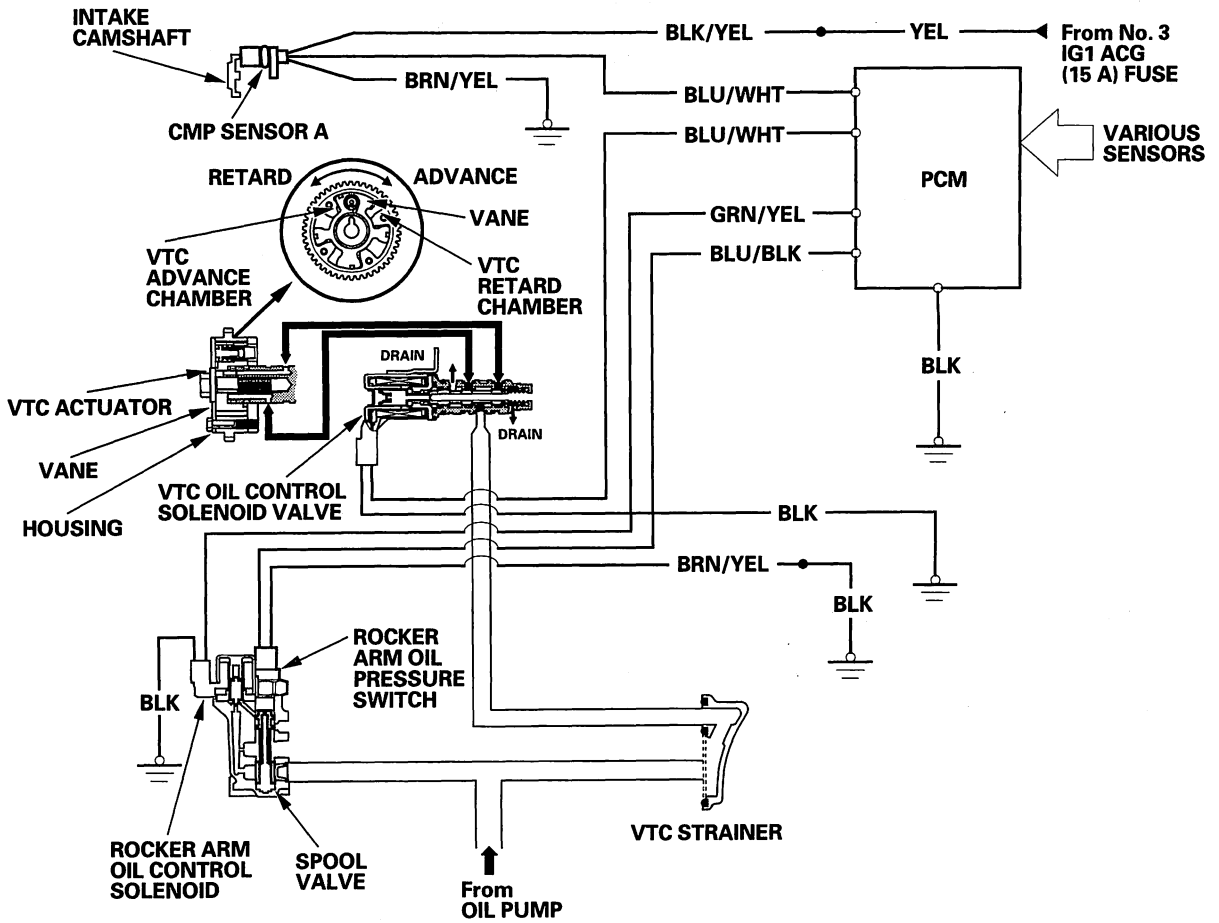


**Camshaft Position (CMP) Sensor A**

CMP sensor A detects camshaft angle position for the VTC system.

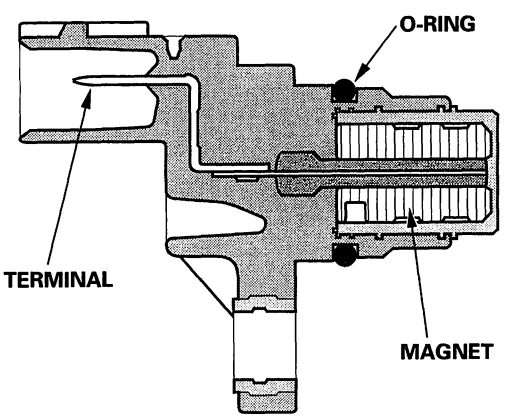




BACK

Protected by AR

## Catalytic Converter System

**Warm Up Three Way Catalytic Converter (WU-TWC) and Three Way Catalytic Converter (TWC)**
The WU-TWC/TWC converts hydrocarbons (HC), carbon monoxide (CO), and oxides of nitrogen (NOx) in the exhaust gas to carbon dioxide ($CO_2$), nitrogen ($N_2$), and water vapor.

**WU-TWC (ATTACHED TO THE TURBOCHARGER)**

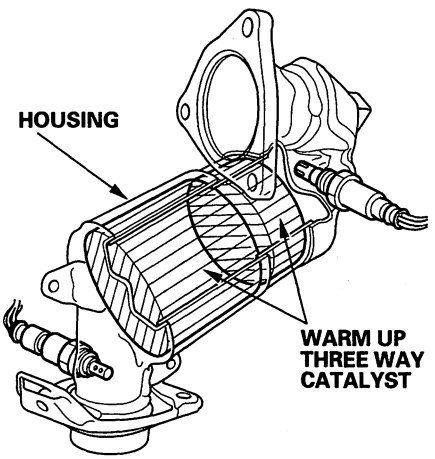


**TWC (UNDER THE FLOOR)**

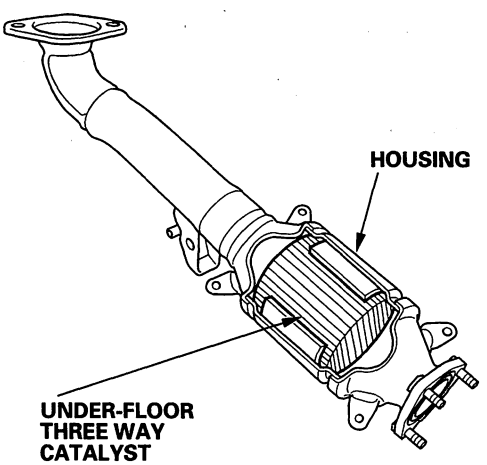


## Positive Crankcase Ventilation (PCV) System

The PCV valve prevents blow-by gasses from escaping into the atmosphere by venting them into the intake manifold. The PCV valve opens at idle, low load, and decelerating with the throttle valve fully closed.

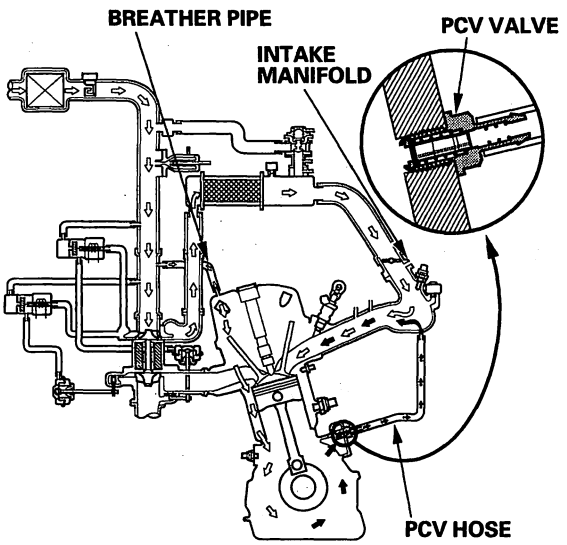


⬅: BLOW-BY VAPOR
⇦: FRESH AIR

(cont'd)

Protected by AR



## System Description (cont'd)

### Evaporative Emission (EVAP) Control System

Refer to the system diagram to see the functional layout of the system.

**EVAP Canister**
The EVAP canister temporarily stores fuel vapor from the fuel tank until it can be purged back into the engine and burned (refer to the system diagram to see the functional layout of the system).

**EVAP Canister Purge Valve**
When the engine coolant temperature is below 140 °F (60 °C), the PCM turns off the EVAP canister purge valve which cuts vacuum to the EVAP canister.

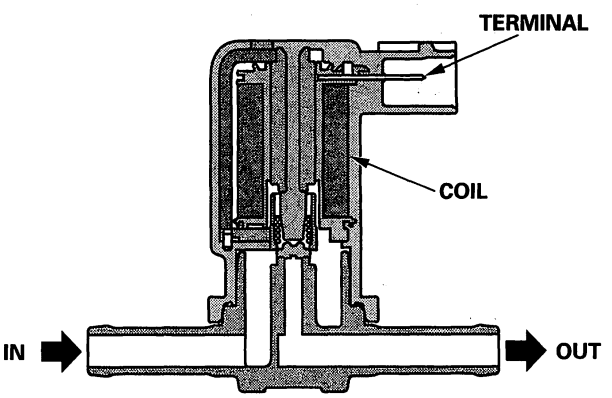


**Fuel Tank Pressure (FTP) Sensor**
The FTP sensor converts fuel tank absolute pressure into an electrical input to the PCM during the EVAP leak check.

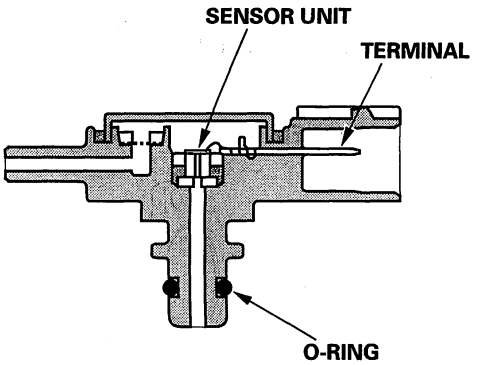


**EVAP Canister Vent Shut Valve**
The EVAP canister vent shut valve is on the EVAP canister.
The EVAP canister vent shut valve controls the venting of the EVAP canister.

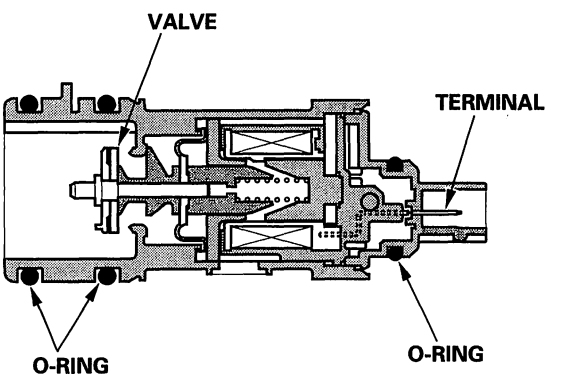




BACK

Protected by AR

## Fuel Cap Warning Message

The PCM will detect a loose or missing fuel fill cap as an evaporative system leak and alerts the driver by showing a warning message in the gauge display.

**First drive cycle**
The first time a leak is detected a "TIGHTEN FUEL CAP" (multi-information display model) ("CHECK FUEL CAP" (information display model)) message in the gauge display (A). To scroll to another message, press the select/reset button. The "TIGHTEN FUEL CAP"/"CHECK FUEL CAP" message will appear each time you restart the engine until the system turns the message off. Turn the engine off then replace or tighten the fuel fill cap until it clicks at least once. The message should go off after several days of normal driving after the fuel fill cap has been tightened or replaced.

**Multi-information display model**

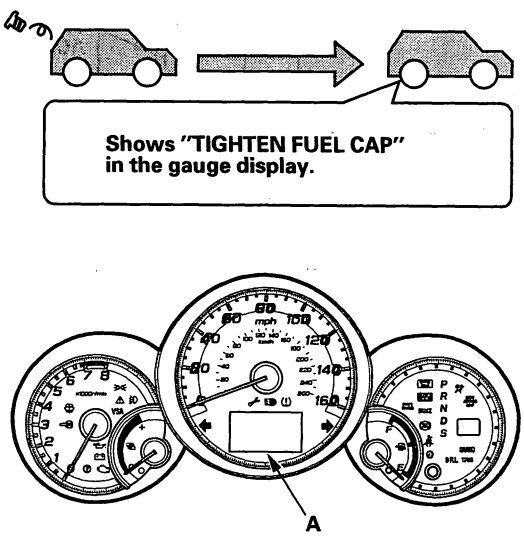


**Information display model**

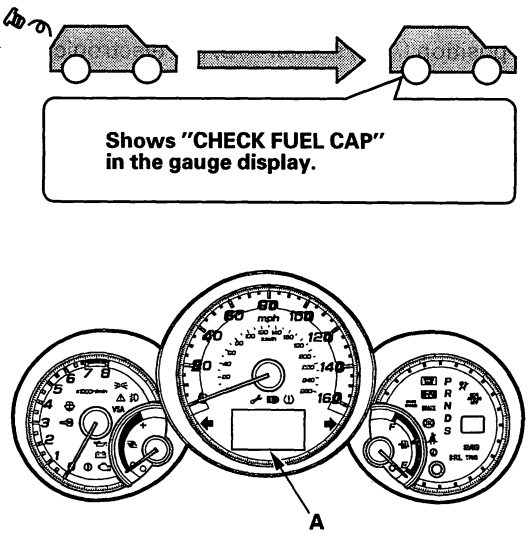


## To make the message go off (With the HDS)

**Procedure**

1. Tighten the fuel fill cap until it clicks.
2. Clear the Temporary DTC with the HDS.
3. Verify there is no leak by doing the EVAP FUNCTION TEST in the INSPECTION MENU with the HDS.

## To make the message go off (Without the HDS)

**Procedure**

1. Tighten the fuel fill cap until it clicks.
2. The message should go off after severval days of normal driving.

(cont'd)

Protected by AR



## System Description (cont'd)

### Electronic Throttle Control System Diagram

The electronic throttle control system consists of the throttle actuator, throttle position (TP) sensor A/B, accelerator pedal position (APP) sensor A/B, the electronic throttle control system (ETCS) control relay, and the PCM.

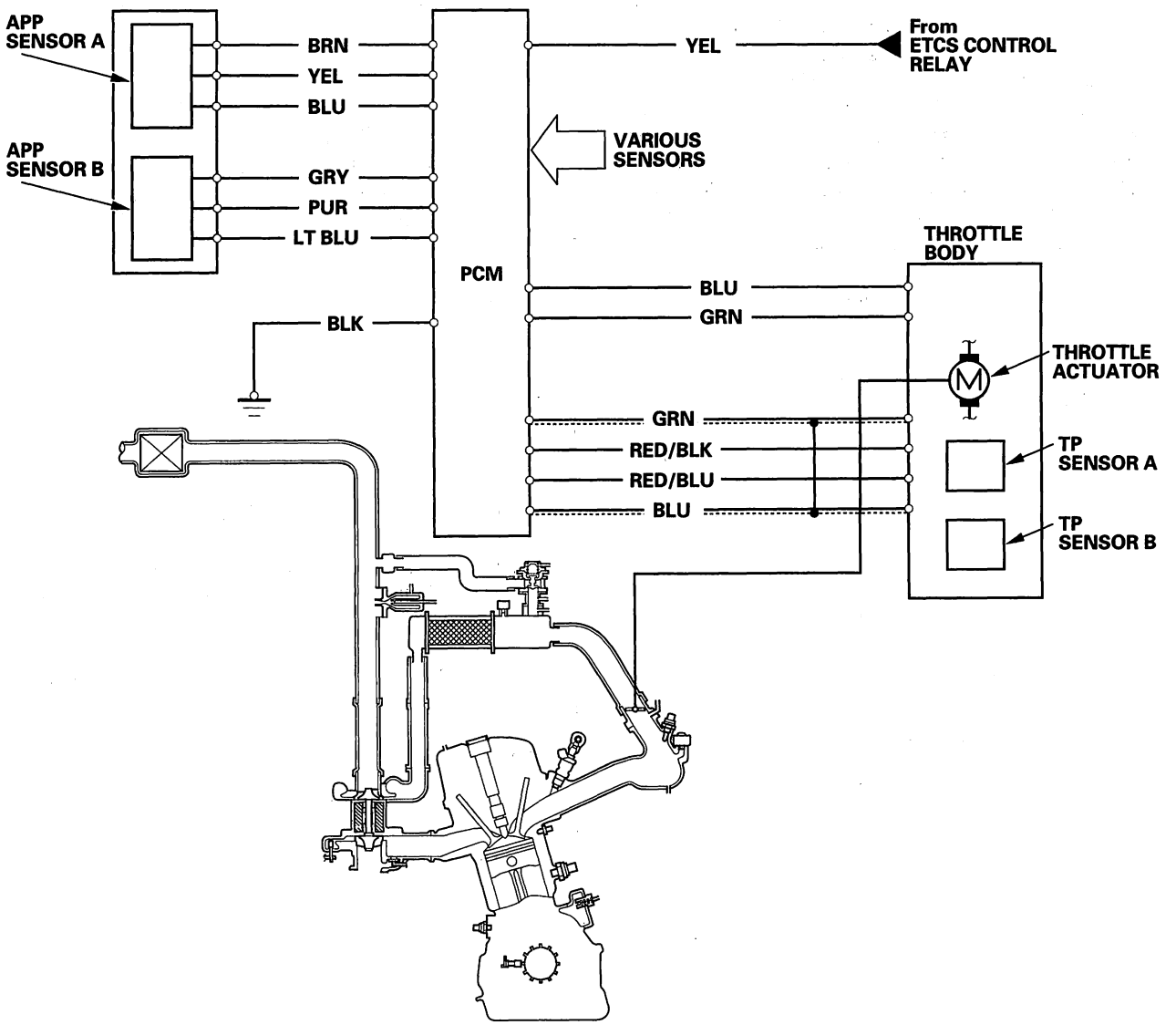




BACK

Protected by AR

## Evaporative Emissions (EVAP) Control System Diagram

The EVAP control system minimizes the fuel vapor escaping to the atmosphere. Vapor from the fuel tank is temporarily stored in the EVAP canister until it can be purged from the canister into the engine and burned. The purge amount and timing is duty controlled by the PCM by operating the EVAP canister purge valve. This system is operated whenever the engine coolant temperature is above 140 ℉ (60 ℃). For this turbo engine model, there are two different purge flow passages, because the intake manifold pressure can be positive (boost pressure) or negative (vacuum pressure).

**Purge to the throttle body**
When the engine is under a low load condition, the pressure inside the intake manifold is negative (vacuum pressure). The vacuum pressure of the intake manifold opens non-return valve A and closes non-return valve B. Under this condition, the purge air flows from the EVAP canister through the EVAP canister purge valve and non-return valve A, into the throttle body.

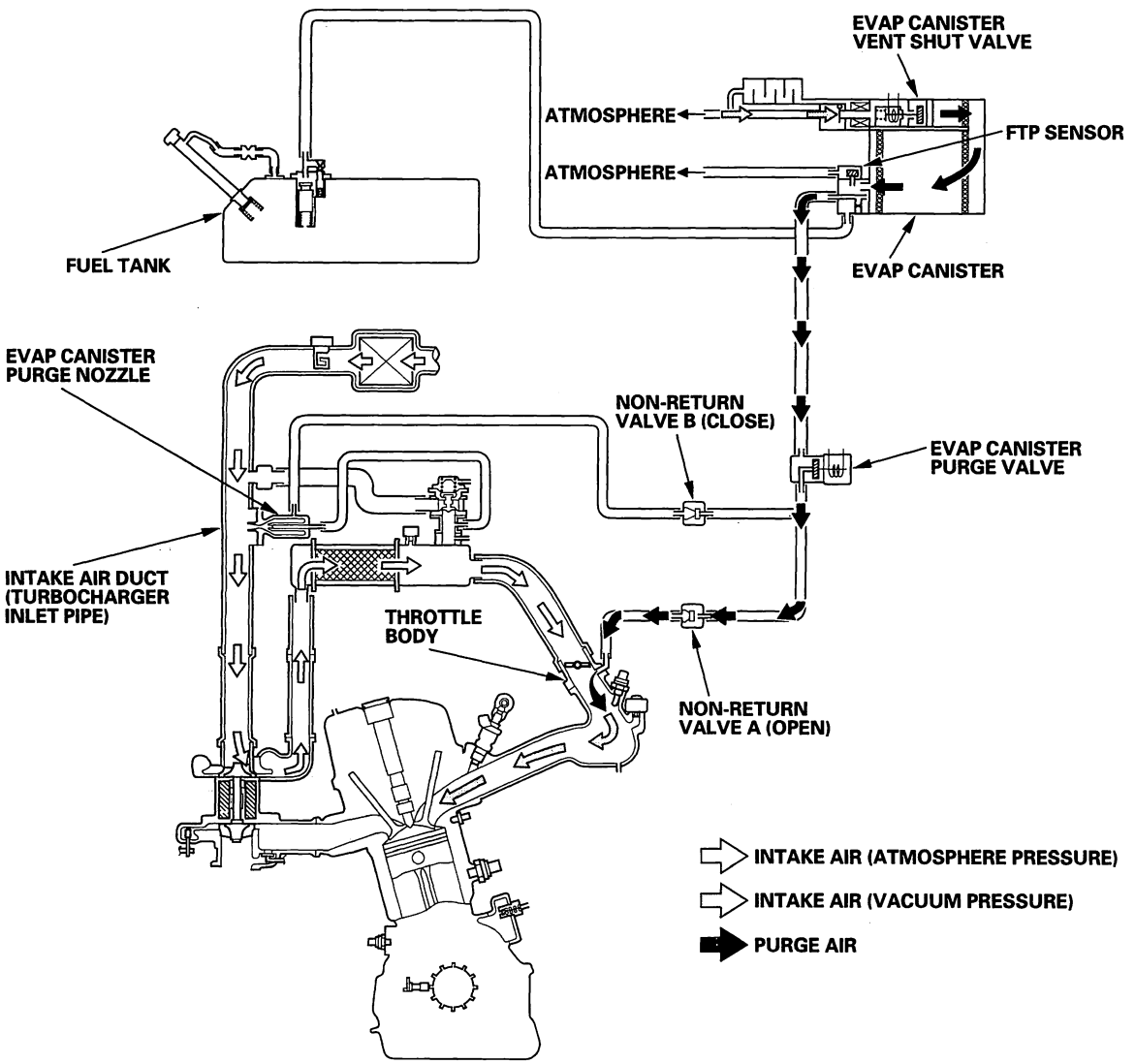


(cont'd)

Protected by AR



## System Description (cont'd)

**Purge to the intake air duct (turbocharger inlet pipe)**
When the engine load increases, the pressure after the turbocharger changes to positive pressure due to turbocharger operation. The boost pressure at the throttle body closes non-return valve A, and due to the boost pressure at the charge air cooler, some part of the compressed air flows through the passage from the air bypass valve base to the intake air duct (turbocharger inlet pipe). When the speed of that compressed air increases at the EVAP canister purge nozzle, it draws the purge air from the EVAP canister side. The non-return valve B opens by this vacuum pressure, and the purge air flows from the EVAP canister through the EVAP canister purge valve and non-return valve B, into the intake air duct (turbocharger inlet pipe).

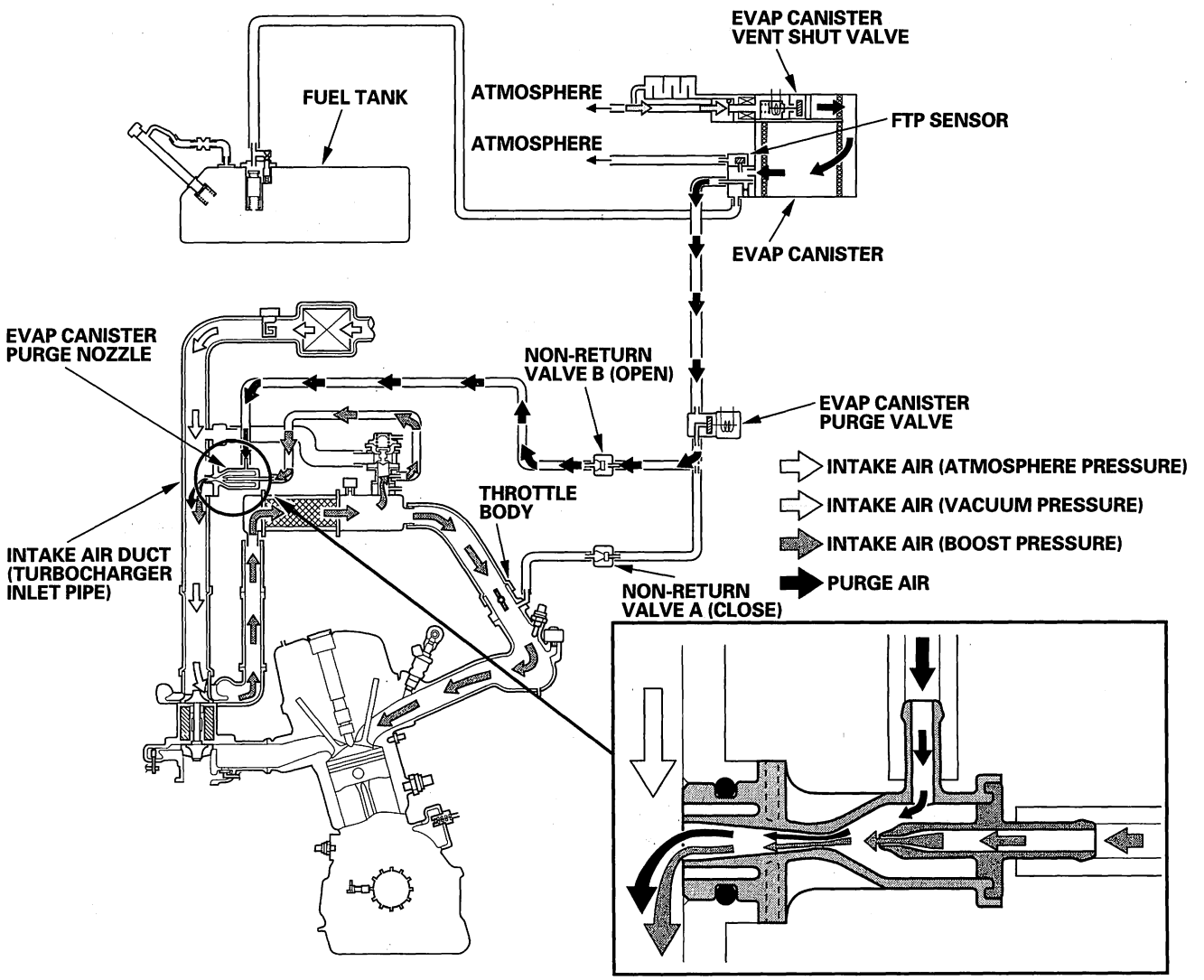




BACK

Protected by AR

**Purge to the both intake air duct (turbocharger inlet pipe) and the throttle body**
When the engine is under a mid load condition, the pressure after the turbocharger is positive due to the turbocharger operation, but the pressure at the intake manifold is negative because the throttle valve is nearly closed. Under this condition, both non-return valves A and B open and the purge air flows from the EVAP canister through the EVAP canister purge valve and non-return valves A and B, into the throttle body and the intake air duct (turbocharger inlet pipe).

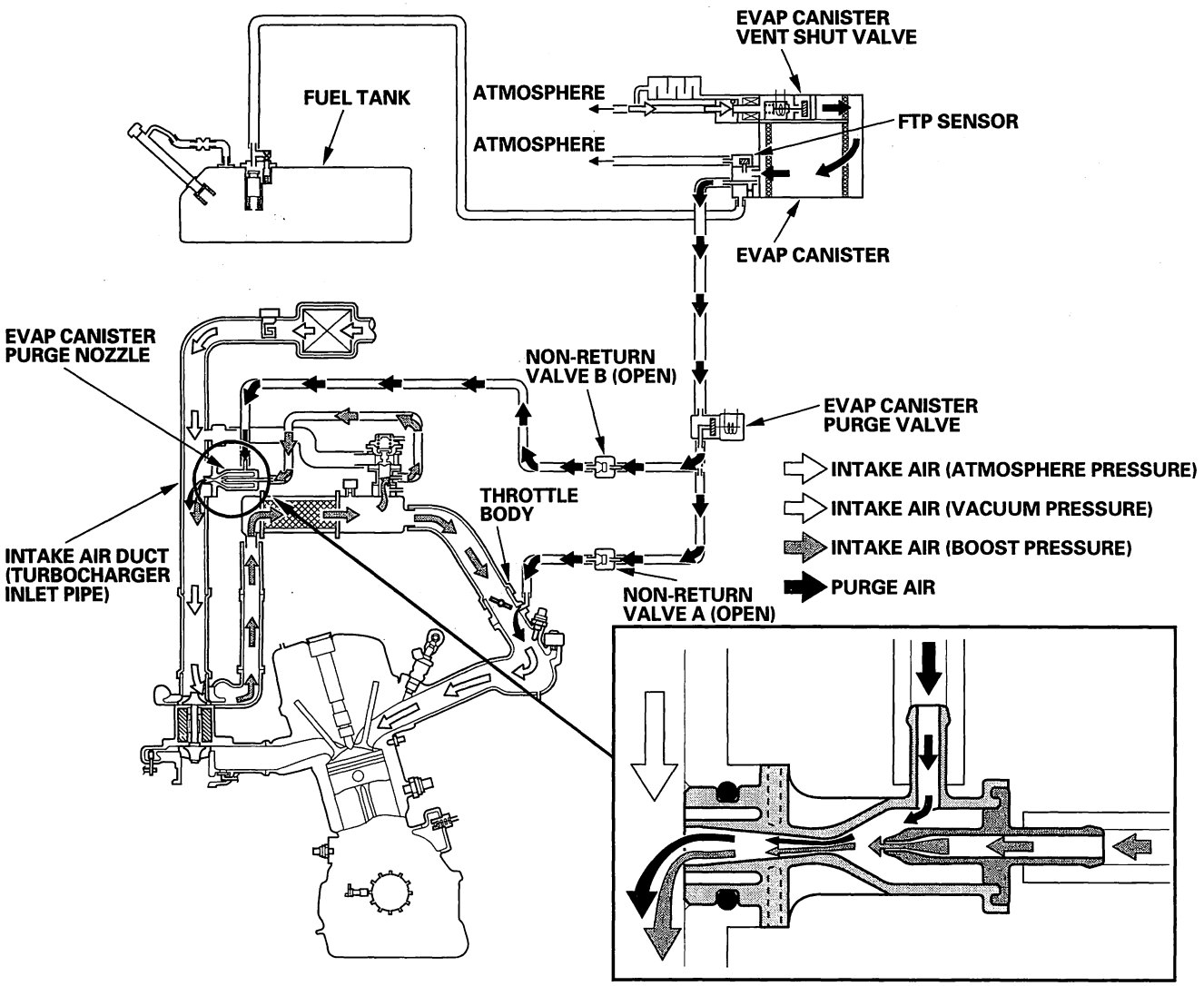


(cont'd)

Protected by AR



## System Description (cont'd)

### Turbocharger Control System

Refer to the system diagram to see the functional layout of the system.

**Turbocharger Boost Sensor**
This sensor converts charge air cooler pressure into an electrical signal that is received by the PCM.

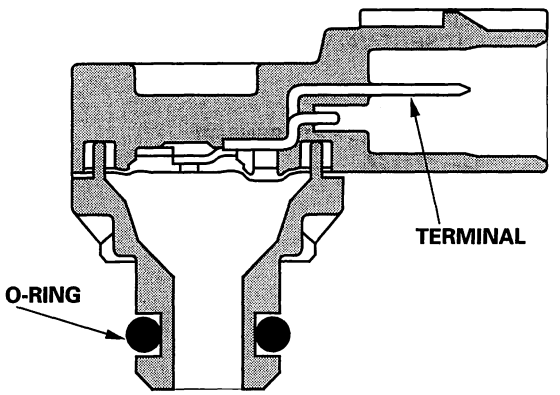


**Turbocharger Wastegate Control Solenoid Valve**
This solenoid valve controls pressure to the turbocharger wastegate control actuator. The solenoid itself is controlled by the PCM. The following information describes the ports on the valve and where the pressure flows when the solenoid switches the valve on and off.

- **Port A—To the intake air duct (turbocharger inlet connecting tube)**
- **Port B—To the turbocharger wastegate control actuator**
- **Port C—To the intake air duct (turbocharger outlet pipe)**

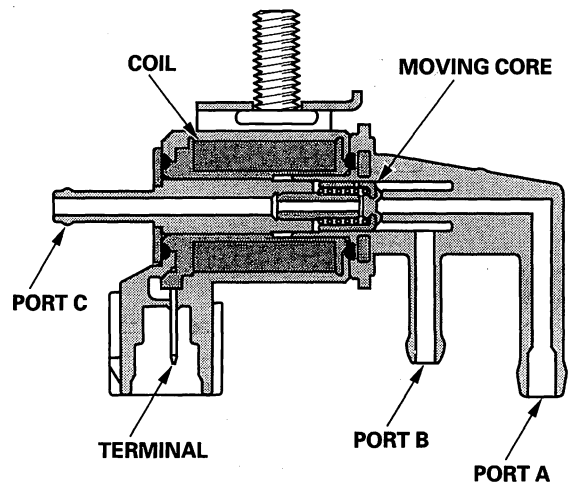


| SOLENOID CONTROL | PORT | | |
|---|---|---|---|
| | A | B | C |
| ON (DUTY MAX) | ○—— | ——○ | |
| OFF (DUTY MIN) | | ○—— | ——○ |



BACK

Protected by AR

**Turbocharger Bypass Control Solenoid Valve**
This solenoid valve controls pressure to the turbocharger bypass control valve. The solenoid itself is controlled by the PCM. The following information describes the ports on the valve and where the pressure flows when the solenoid switches the valve on and off.

- **Port A—To the charge air cooler**
- **Port B—To the turbocharger bypass control valve**
- **Port C—To the intake manifold**

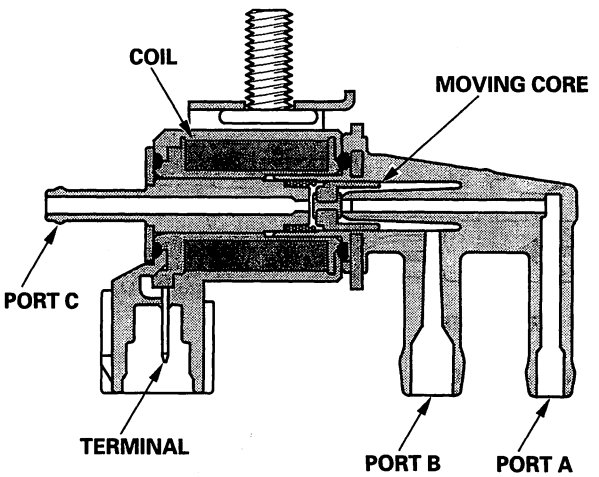


| SOLENOID CONTROL | PORT | | |
|---|---|---|---|
| | A | B | C |
| ON | ○—— | ——○ | |
| OFF | | ○—— | ——○ |

**Turbocharger Boost Control Solenoid Valve**
This solenoid valve controls pressure to the tubocharger boost control valve. The solenoid itself is controlled by the PCM. The following information describes the ports on the valve and where the pressure flows when the solenoid switches the valve on and off.

- **Port A—To the intake air duct (turbocharger inlet connecting tube)**
- **Port B—To the turbocharger boost control actuator**
- **Port C—To the intake air duct (turbocharger outlet pipe)**

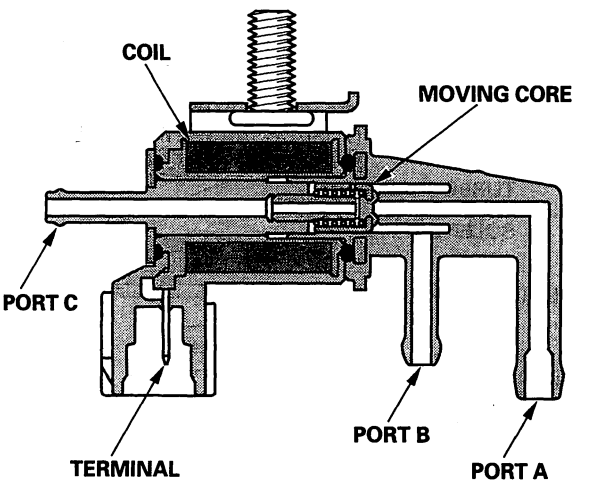


| SOLENOID CONTROL | PORT | | |
|---|---|---|---|
| | A | B | C |
| ON (DUTY MAX) | ○—— | ——○ | |
| OFF (DUTY MIN) | | ○—— | ——○ |

(cont'd)

Protected by AR



## System Description (cont'd)

### Turbocharger Control System Diagram

The turbocharger control system controls the boost pressure and the response of the turbocharger. The PCM controls the turbocharger wastegate control solenoid valve (duty controlled), the turbocharger bypass control solenoid valve (on/off controlled), and the turbocharger boost control valve (duty controlled). The boost pressure is monitored by the turbocharger boost sensor.

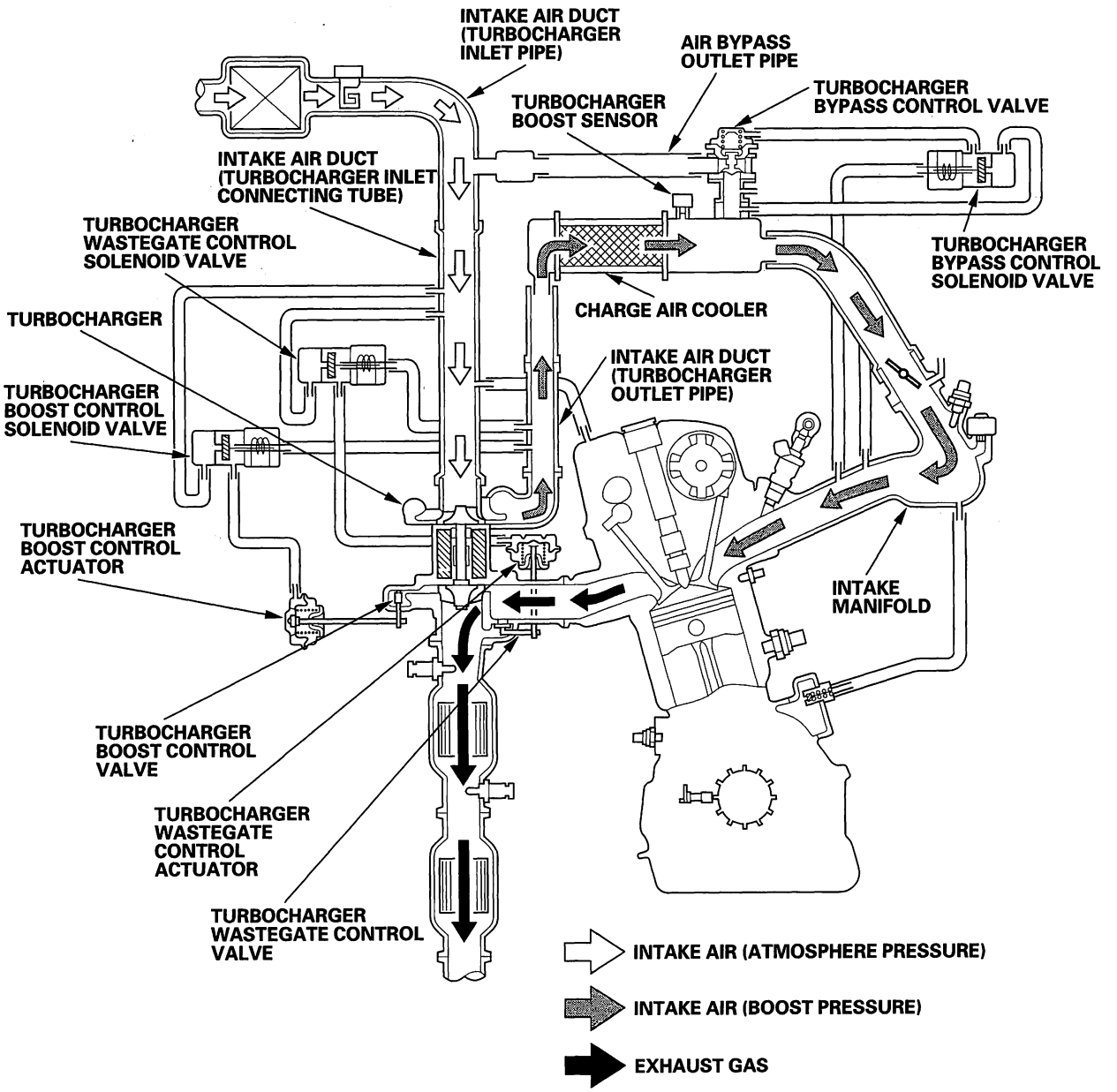




BACK

Protected by AR

## Turbocharger Wastegate Control System

This system controls the wastegate control solenoid to prevent the turbo from exceeding maximum boost pressure. This system is duty controlled by the PCM. The descriptions A and B are the two conditions of duty. Condition A (maximum duty) and condition B (minimum duty). At other times, the turbocharger wastegate control solenoid controls both the passages from the intake air duct (turbocharger inlet connecting tube), and the intake air duct (turbocharger outlet pipe) to the turbocharger wastegate control actuator.

**Condition A (maximum duty):**
When the turbocharger boost sensor signal is lower than the upper limit, the PCM turns on (maximum duty) the turbocharger wastegate control solenoid valve, and opens the passage between the intake air duct (turbocharger inlet connecting tube) and the turbocharger wastegate control actuator and closes the passage from the intake air duct (turbocharger outlet pipe) and the turbocharger wastegate control actuator. The pressure at the turbocharger wastegate control actuator is freed to the intake air duct (turbocharger inlet connecting tube), and the spring in the turbocharger wastegate control actuator closes the turbocharger wastegate control valve. In this condition, all of the exhaust gas flows to the turbine. This increases the rpm of the turbine, increasing boost pressure.

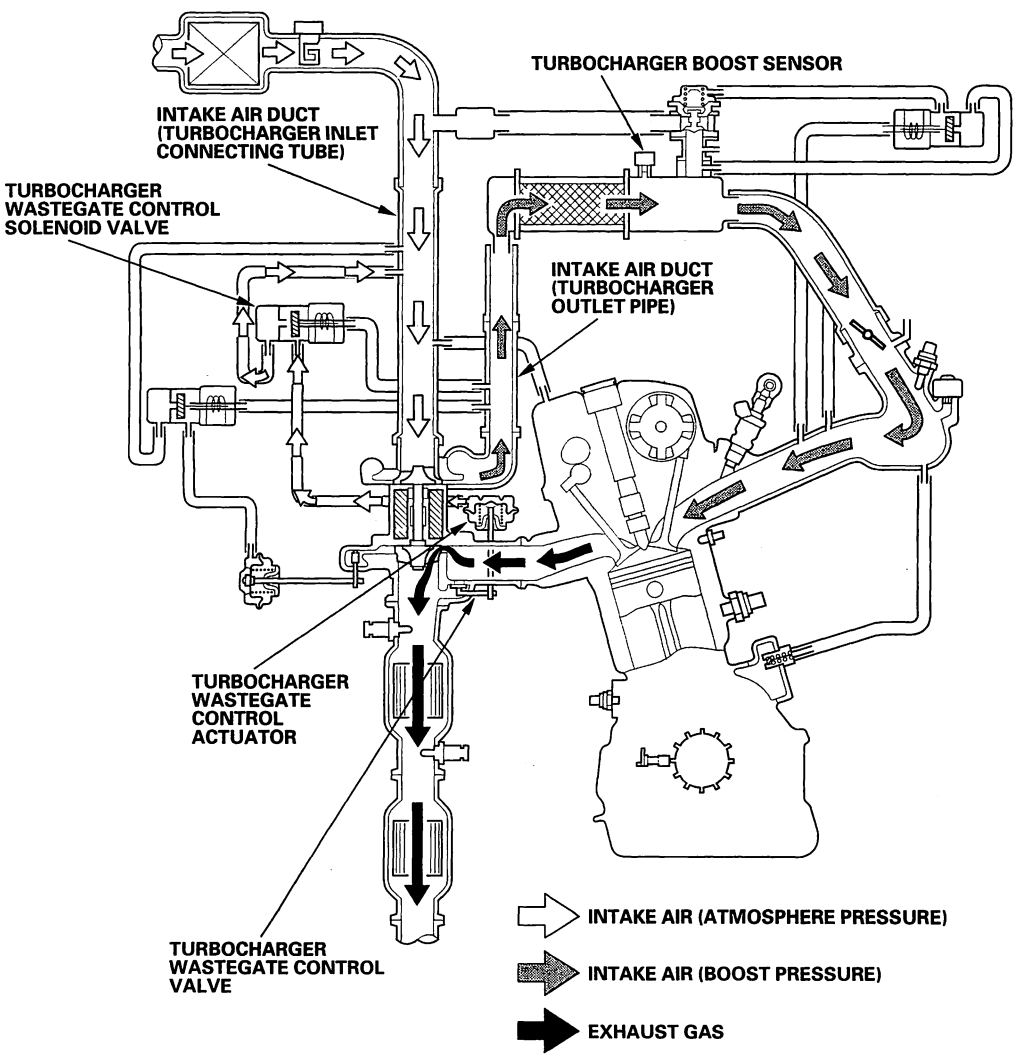


(cont'd)

Protected by AR



## System Description (cont'd)

**Condition B (minimum duty):**
When the turbocharger boost sensor signal reaches the upper limit, the PCM turns off (minimum duty) the turbocharger wastegate control solenoid valve, and opens the passage between the intake air duct (turbocharger outlet pipe) and the turbocharger wastegate control actuator and closes the passage from the intake air duct (turbocharger inlet connecting tube) and the turbocharger wastegate control actuator. The boost pressure from the intake air duct (turbocharger outlet pipe) pushes the turbocharger wastegate control actuator and opens the turbocharger wastegate control valve. In this condition, only a portion of the exhaust gas flows through the bypass passage bypassing the turbocharger wastegate control valve, and the amount of exhaust gas to the turbocharger decreases. This decreases the rpm of the turbine decreasing boost pressure.

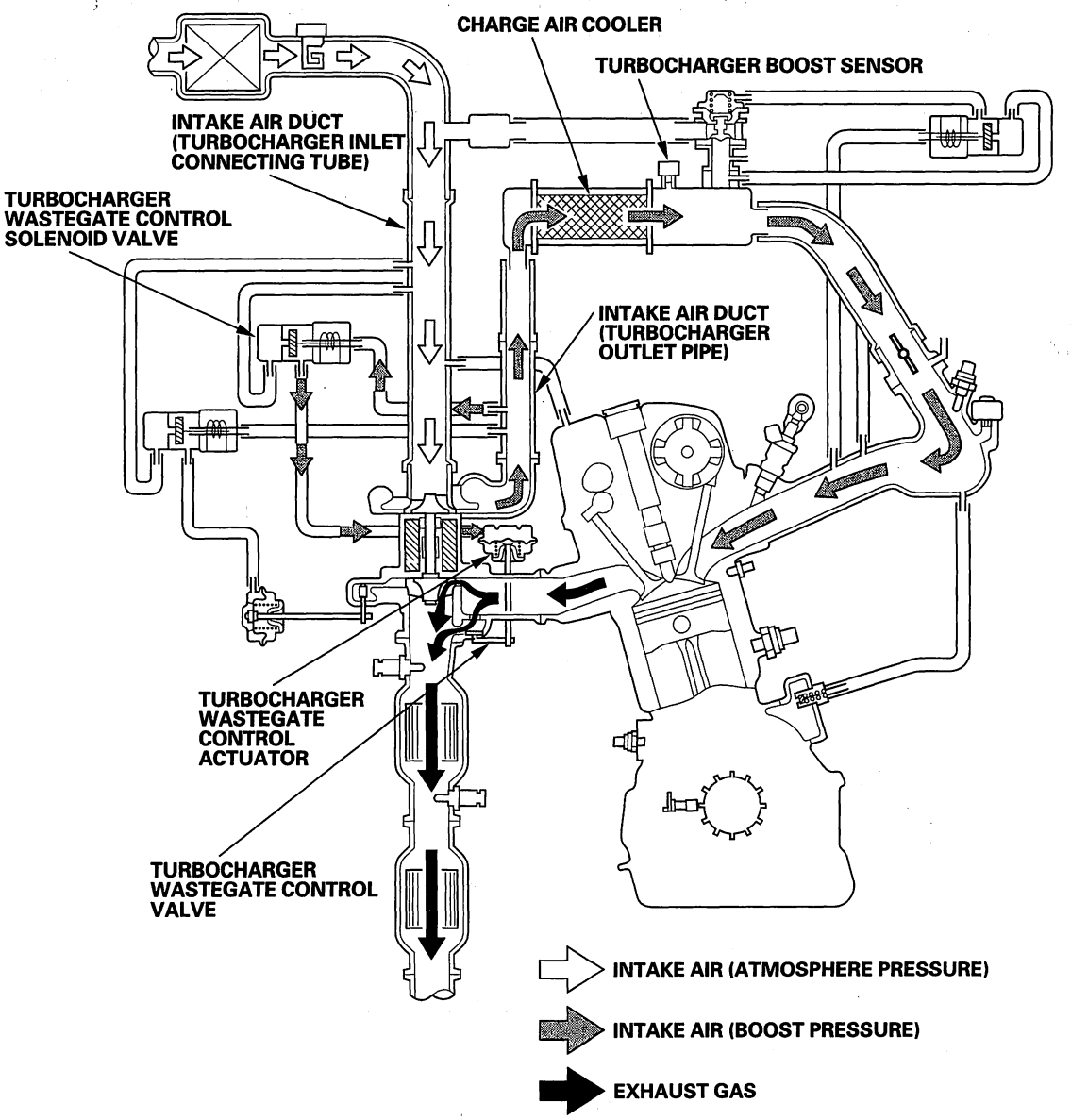




BACK

Protected by AR

## Turbocharger Bypass Control System

This system improves the boost response of acceleration immediately after deceleration. This system also protects the turbocharger from the negative effects of compressor surge during high boost. The descriptions A and B are the two conditions of the turbocharger bypass control solenoid valve on and off. Condition A (on) and conditon B (off).

**Condition A (Solenoid Valve ON):**
When the vehicle is in cruise or accelerating, the PCM turns on the turbocharger bypass control solenoid valve, and opens the passage between the charge air cooler and the turbocharger bypass control valve and closes the passage between the intake manifold and the turbocharger bypass control valve. The boost pressure from the charge air cooler pushes the turbocharger bypass control valve, and closes the passage between the charge air cooler and the intake air duct (turbocharger inlet pipe). By doing this, all compressed air is routed to the intake manifold.

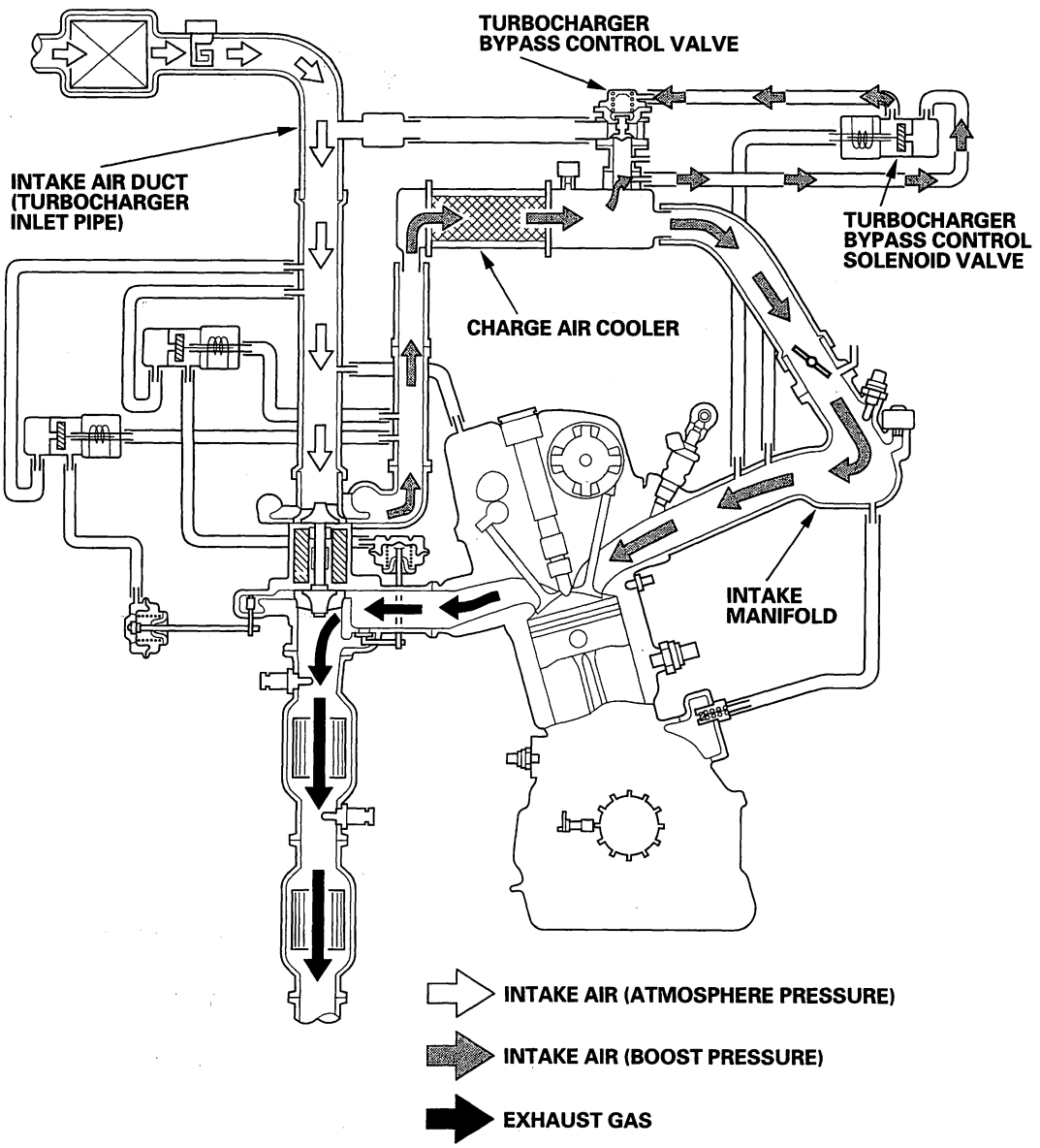


(cont'd)

Protected by AR



## System Description (cont'd)

**Condition B (Solenoid Valve OFF):**
Durnig the deceleration with the throttle valve closed, the PCM turns off the turbocharger bypass control solenoid valve and opens the passage between the intake manifold and the turbocharger bypass control valve and closes the passage between the charge air cooler and the turbocharger bypass control valve. The vacuum pressure from the intake manifold pulls the turbocharger bypass control valve and opens the passage between the charge air cooler and the intake air duct (turbocharger inlet pipe). By doing this, the compressed air flows from the charge air cooler to the intake air duct (turbocharger inlet pipe) to keep the turbine spinning. This improves the acceleration response of the turbocharger after deceleration.

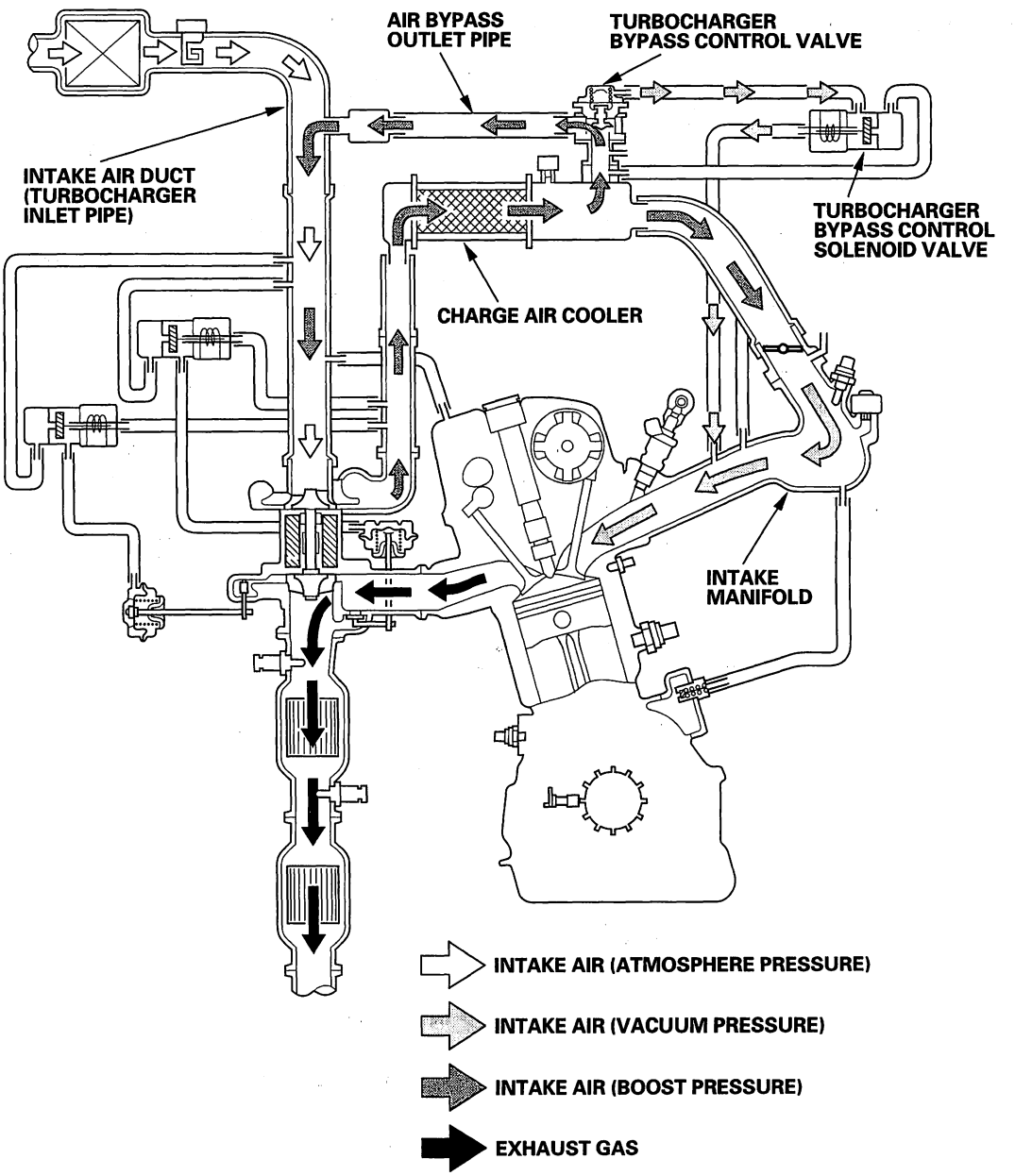




BACK

Protected by AR

## Turbocharger Boost Control System

This system controls the exhaust gas passage to the turbine by changing the variable flap angle. The variable flap is moved by the turbocharger boost control actuator, and it is duty controlled by the PCM depending on the driving condition.

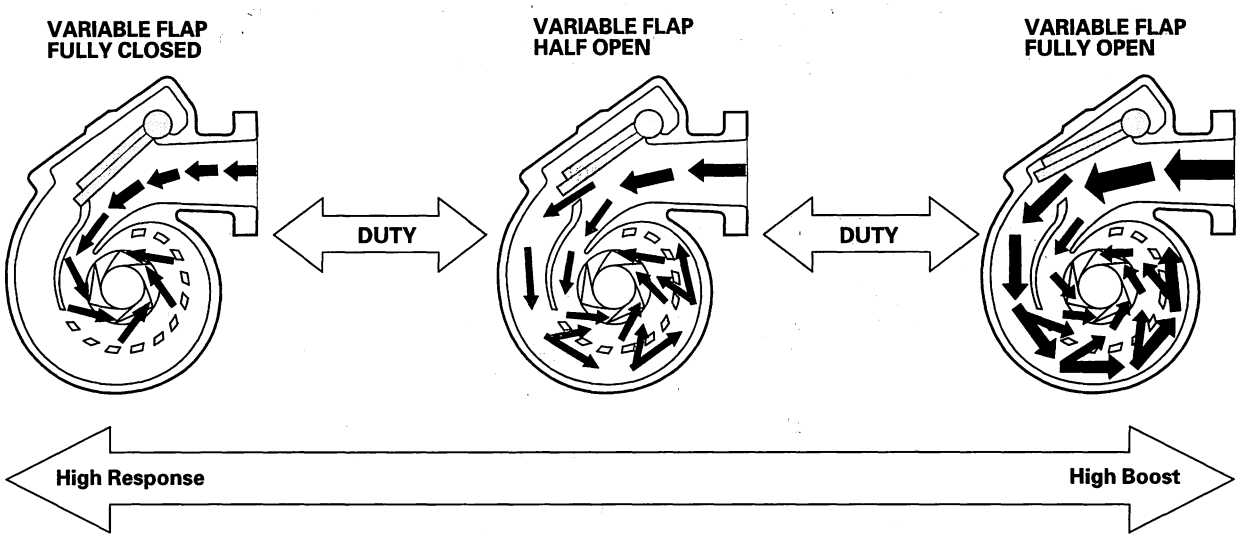


When the variable flap is fully closed, all exhaust gas flows to the inner scroll of the turbocharger. Under this condition, the exhaust gas speed is accelerated, and the turbocharger response is improved. When the variable flap is fully opened, the exhaust gas flows through both the outer and the inner scroll of the turbocharger. Under this condition, the exhaust gas is efficiently used to improve the maximum boost. Because of this system, the turbocharger functions both as a quick responding small size turbocharger, and high capacity turbocharger.
The description A and B are the two conditions of duty. Condition A (maximum duty) and condition B (minimum duty). At other times, the turbocharger boost controls both the passages from the intake air duct (turbocharger inlet connecting tube), and the intake air duct (turbocharger outlet pipe) to the turbocharger boost control actuator.

(cont'd)

Protected by AR



## System Description (cont'd)

**Condition A (maximum duty):**
Under a low engine speed/low load condition (with only a small amount of exhaust gas), the PCM turns on (maximum duty) the turbocharger boost control solenoid valve and opens the passage between the intake air duct (turbocharger inlet connecting tube) and the turbocharger boost control actuator and closes the passage between the intake air duct (turbocharger outlet pipe) and the turbocharger boost control actuator. The pressure at the turbocharger boost control actuator is freed to the intake air duct (turbocharger inlet connecting tube), and the spring inside the turbocharger boost control actuator closes the variable flap. With the variable flap closed, the exhaust gas flows at high speed through the inner scroll of the turbocharger improving the turbo response.

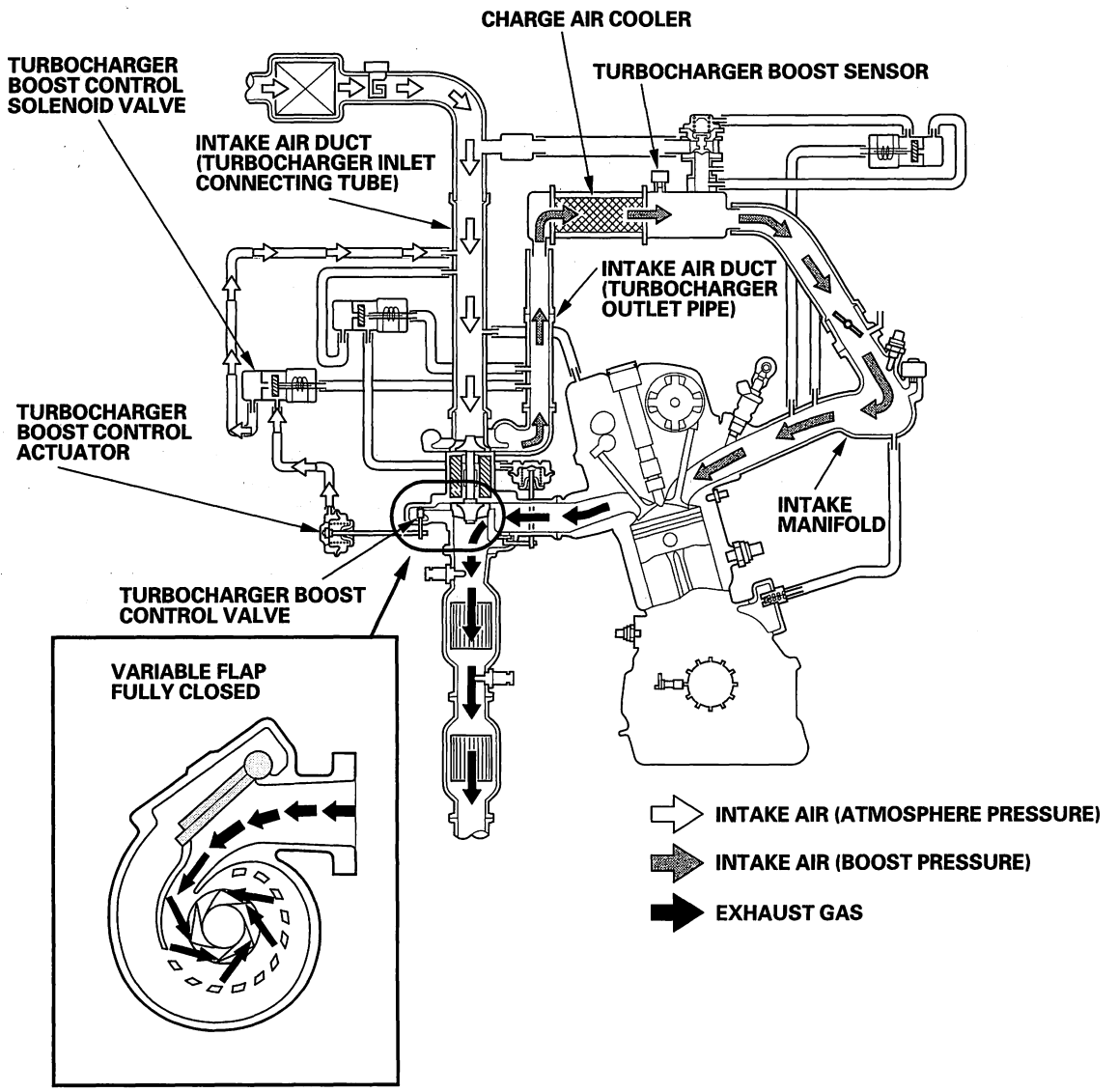




BACK

Protected by AR

**Condition B (minimum duty):**
Under a mid or high load conditions (with large amount of exhaust gas), the PCM turns off (minimum duty) the turbocharger boost control solenoid valve and opens the passage between the intake air duct (turbocharger outlet pipe) and the turbocharger boost control actuator and closes the passage between the intake air duct (turbocharger inlet connecting tube) and the turbocharger boost control actuator. The boost pressure from intake air duct (turbocharger outlet pipe) pushes the turbocharger boost control actuator which opens the variable flap. With the variable flap opened, the exhaust gas flows through both the inner and the outer scroll for efficient turbo operation at mid and high engine speed.

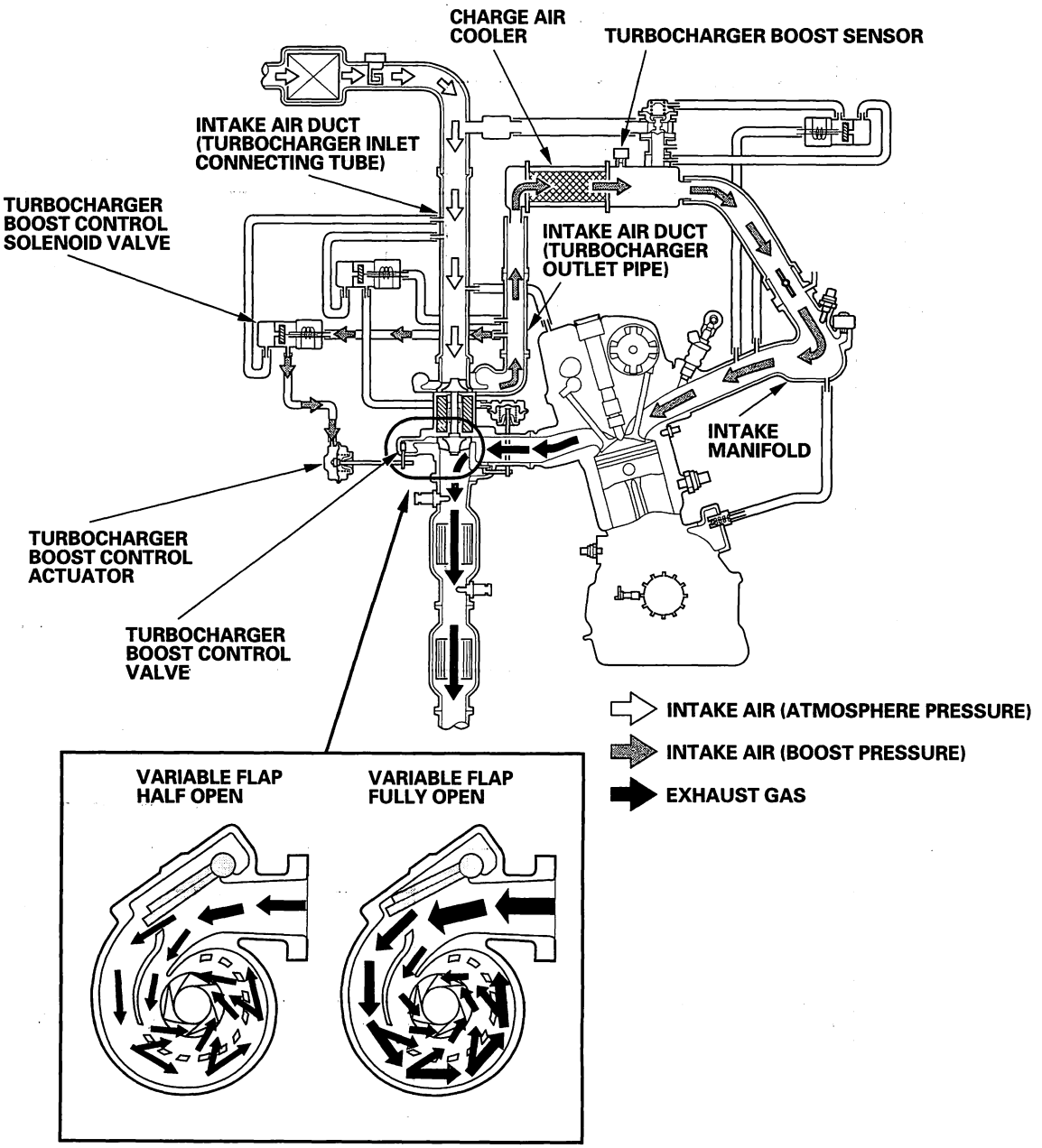


(cont'd)

Protected by AR



## System Description (cont'd)

### PCM Circuit Diagram

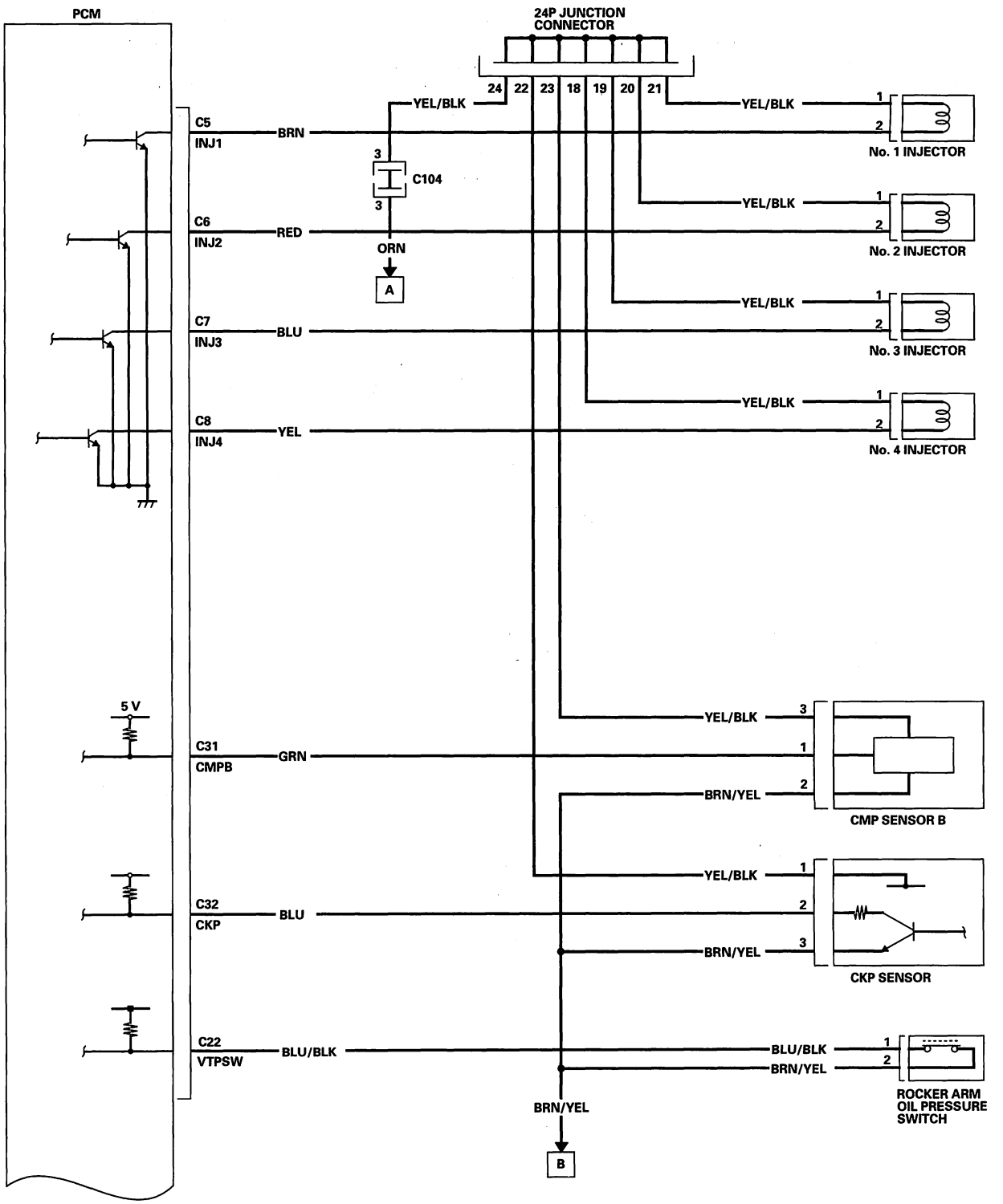




BACK

Protected by AR

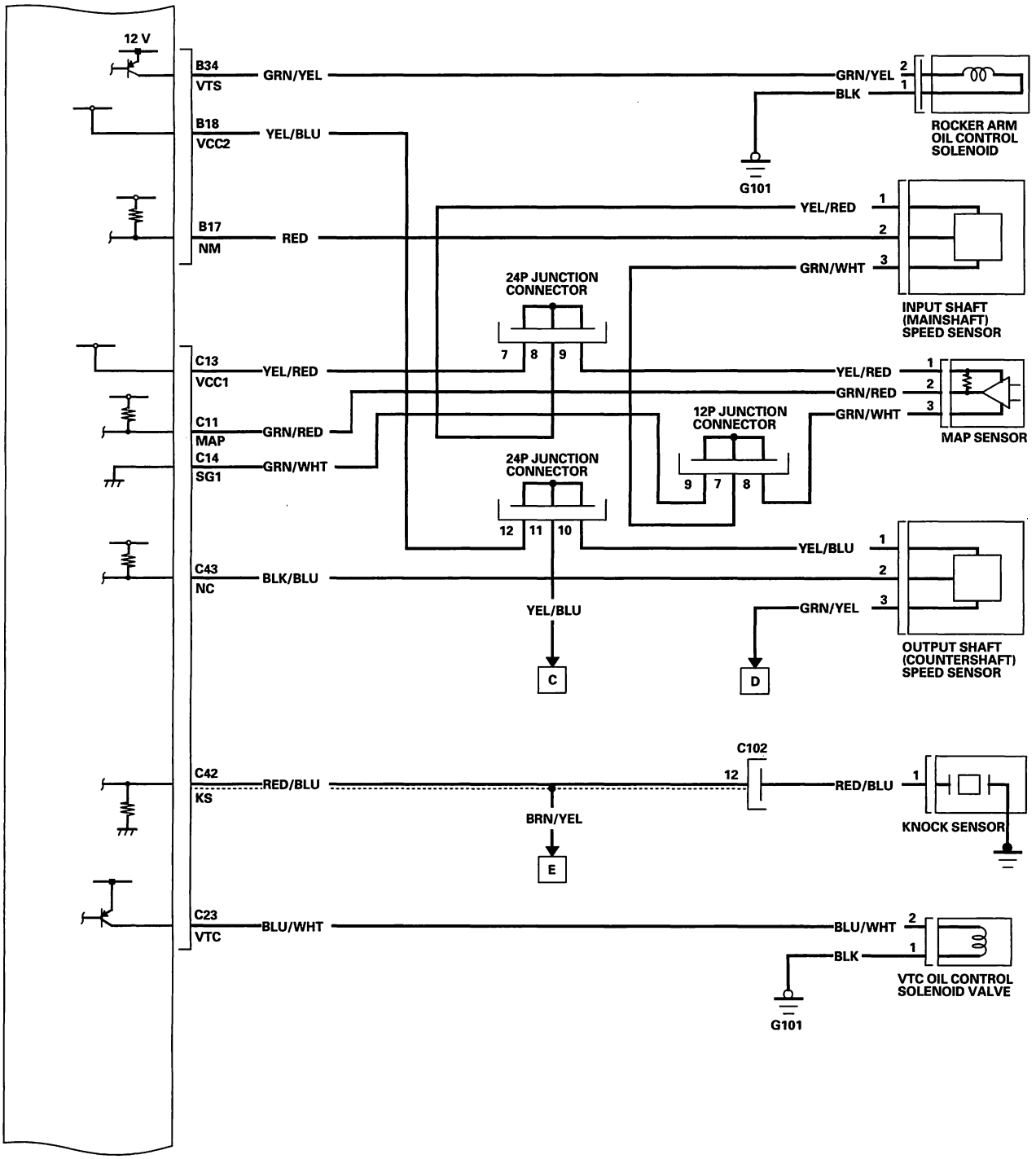


(cont'd)

Protected by AR



## System Description (cont'd)

### PCM Circuit Diagram (cont'd)

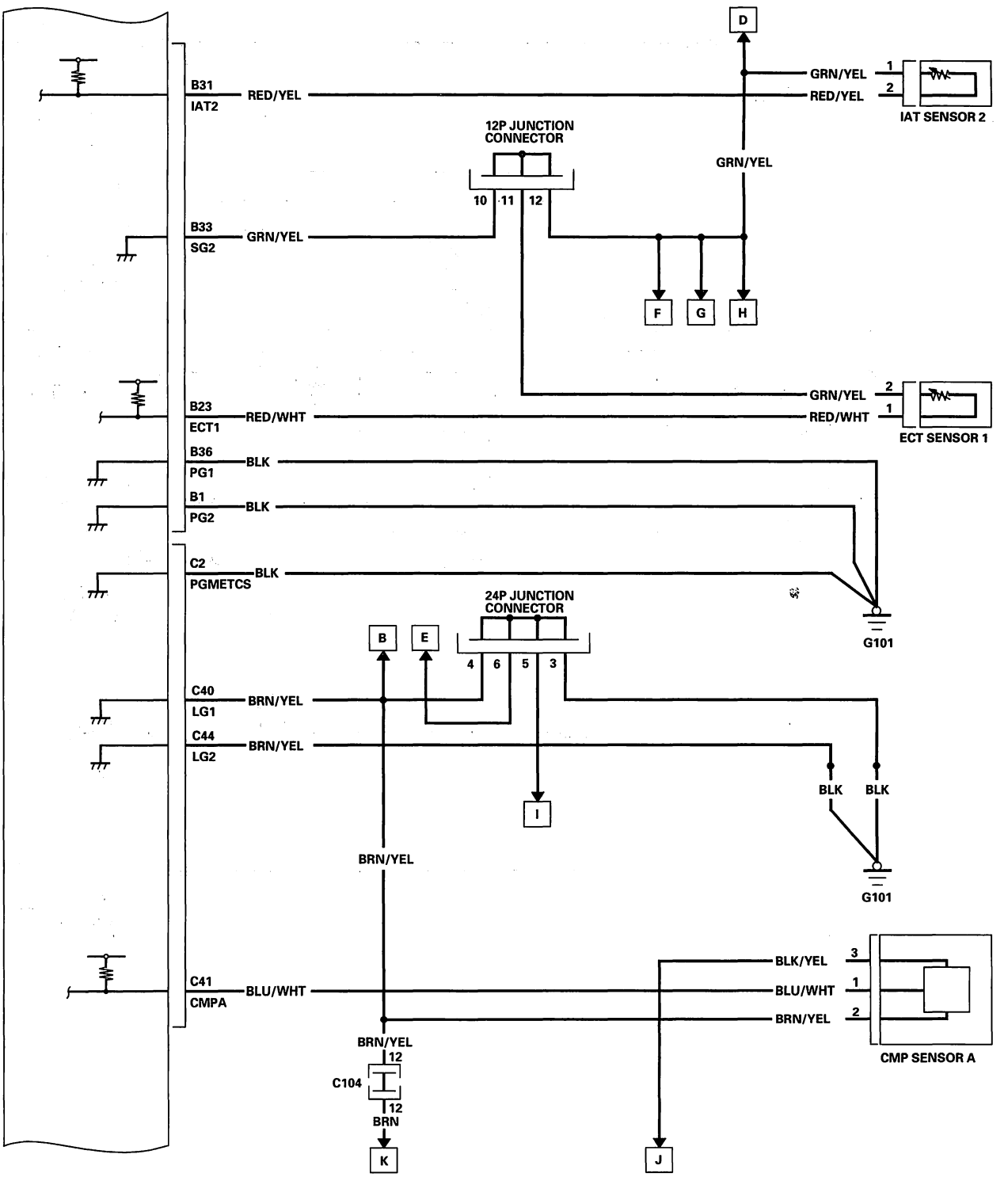




BACK

Protected by AR

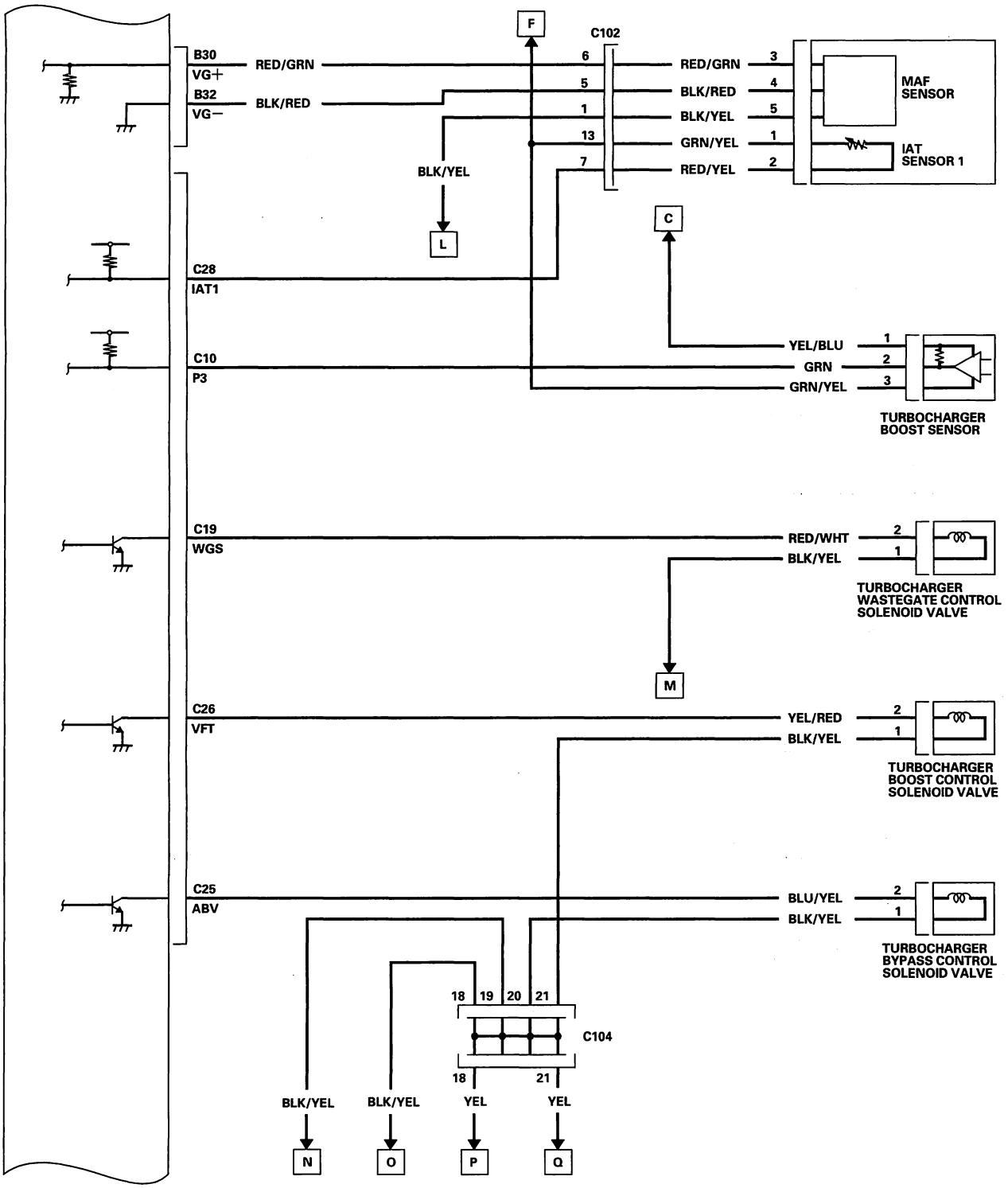


(cont'd)

Protected by AR



## System Description (cont'd)

### PCM Circuit Diagram (cont'd)

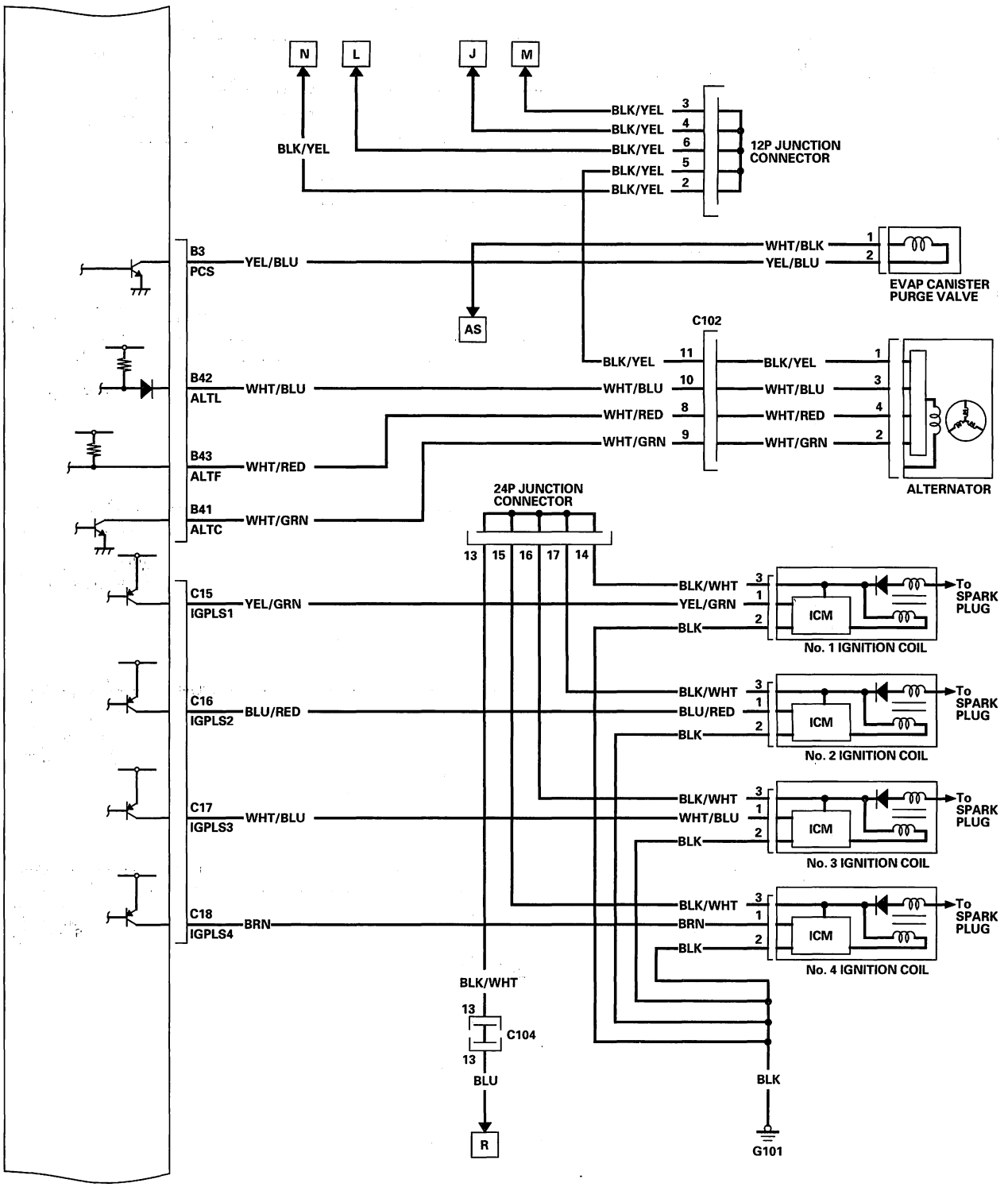




BACK

Protected by AR

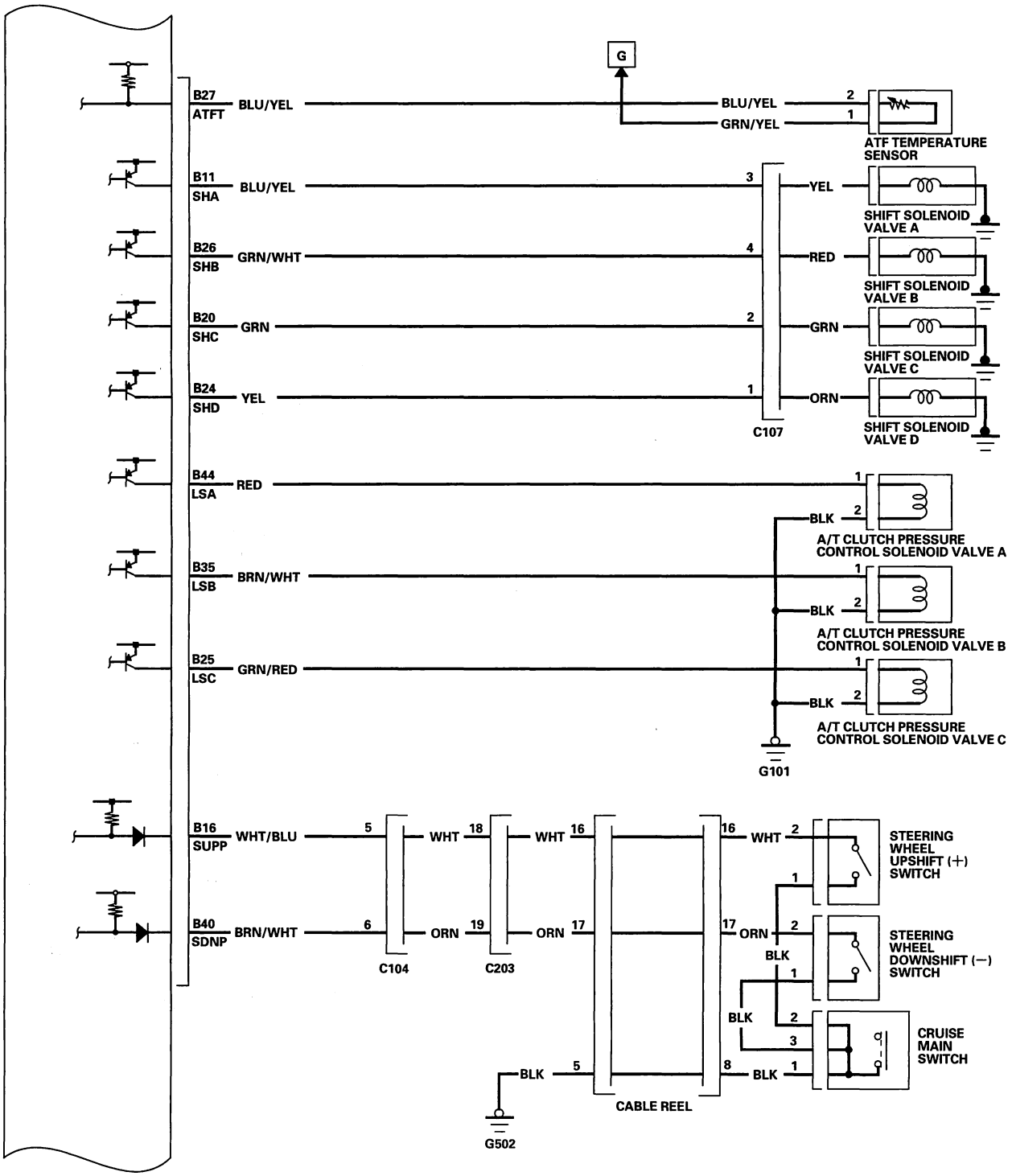


(cont'd)

Protected by AR



## System Description (cont'd)

### PCM Circuit Diagram (cont'd)

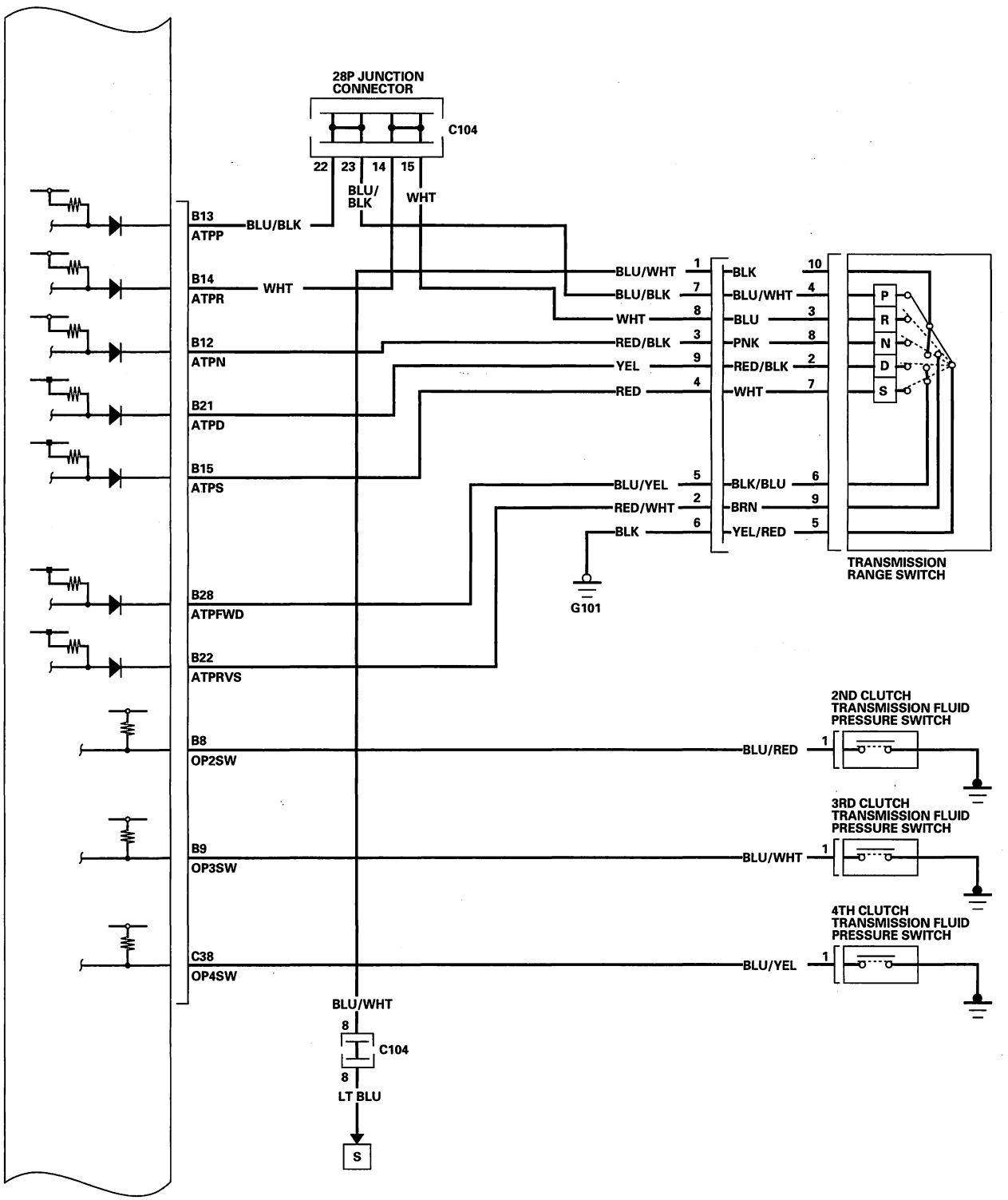




BACK

Protected by AR

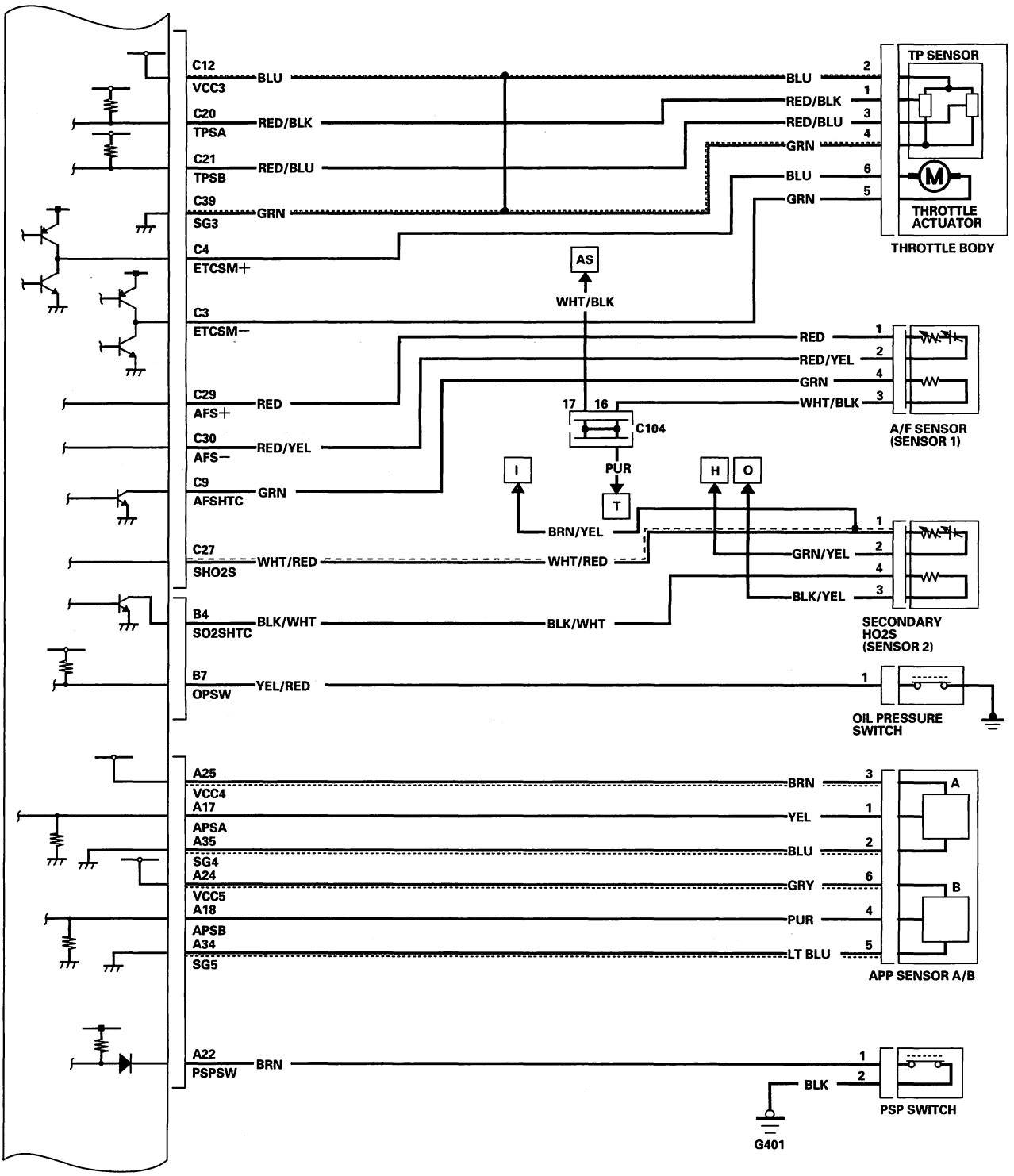


(cont'd)

Protected by AR



## System Description (cont'd)

### PCM Circuit Diagram (cont'd)

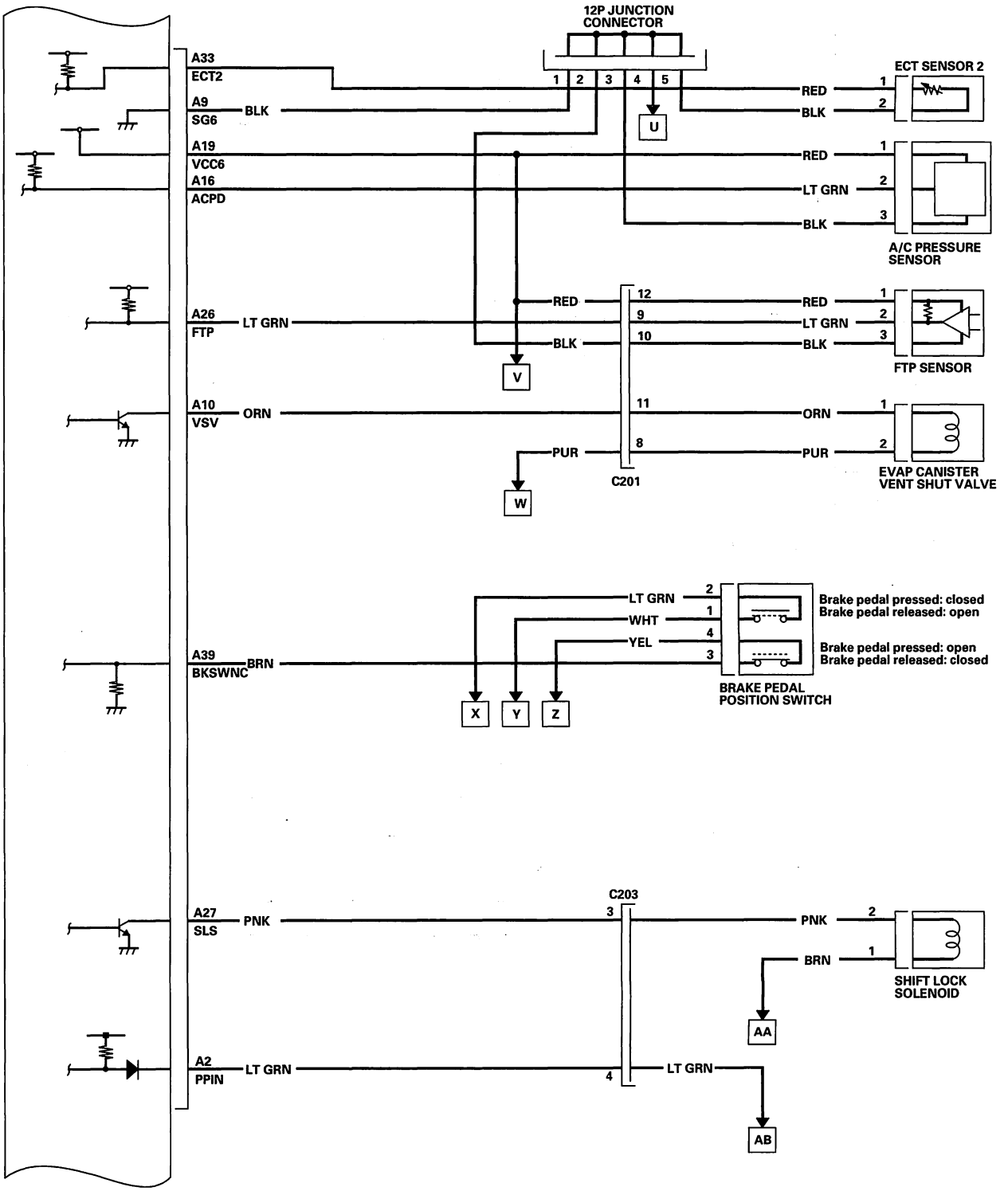




BACK

Protected by AR

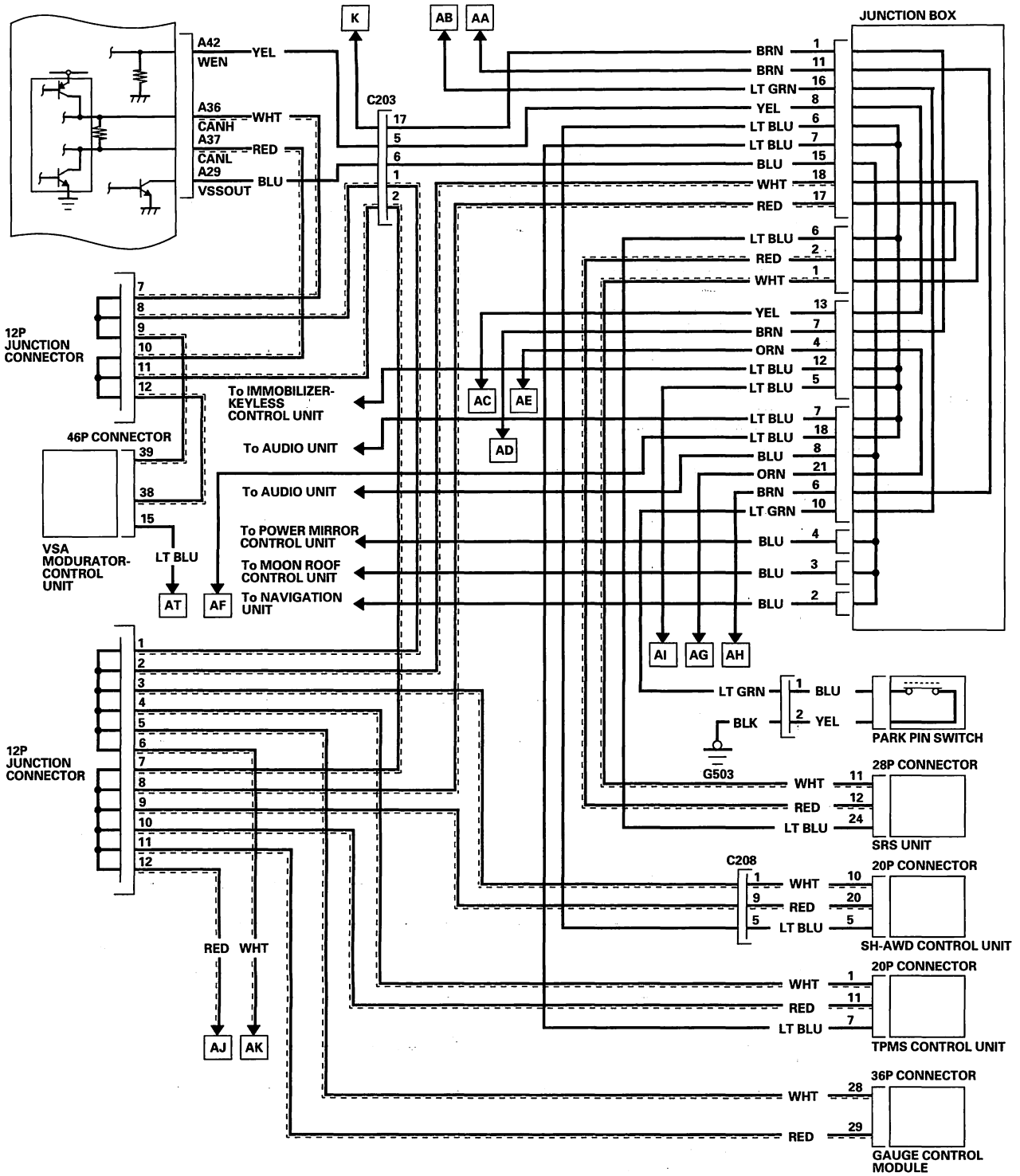


(cont'd)

Protected by AR



## System Description (cont'd)

### PCM Circuit Diagram (cont'd)

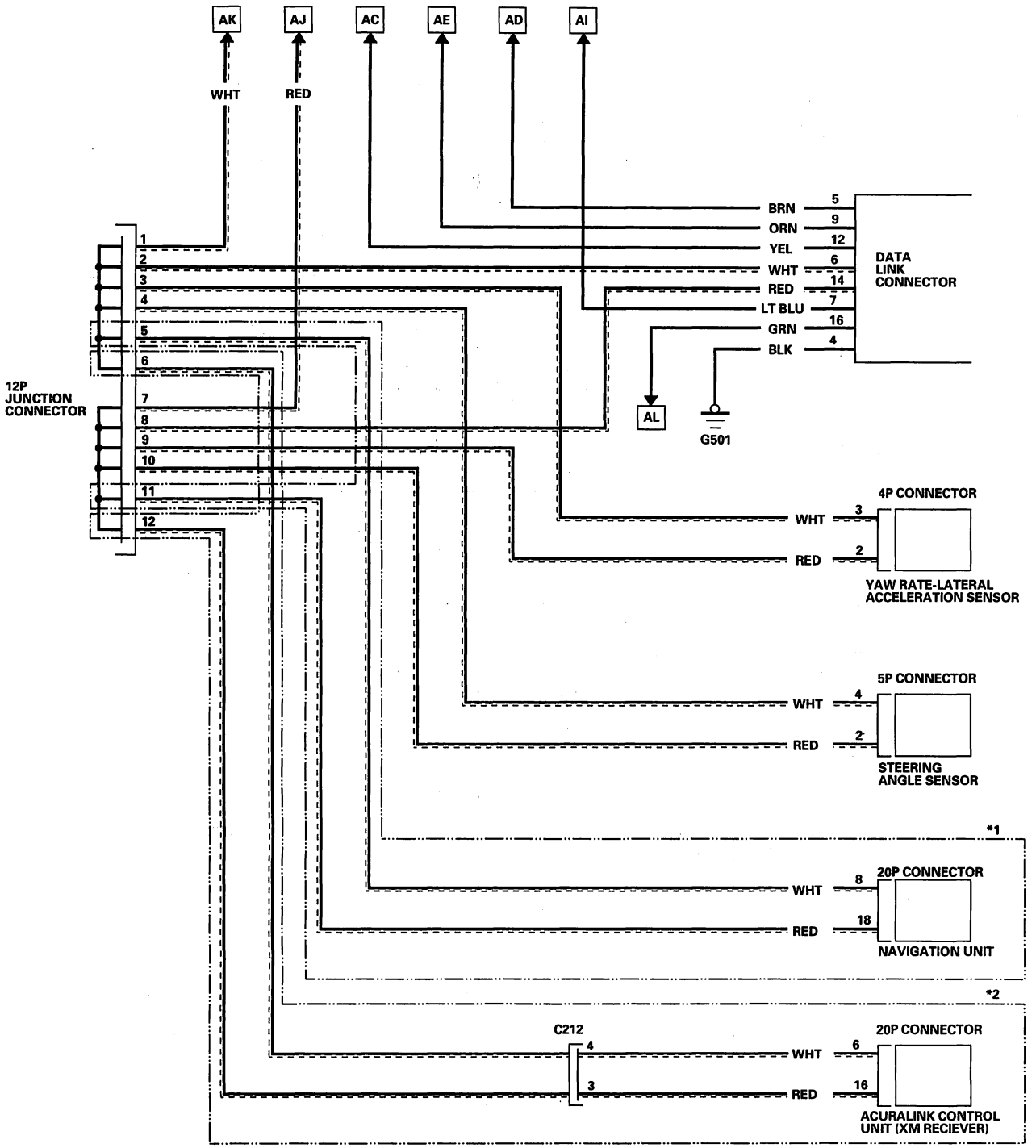


*1: with NAVIGATION
*2: USA with NAVIGATION



BACK

Protected by AR

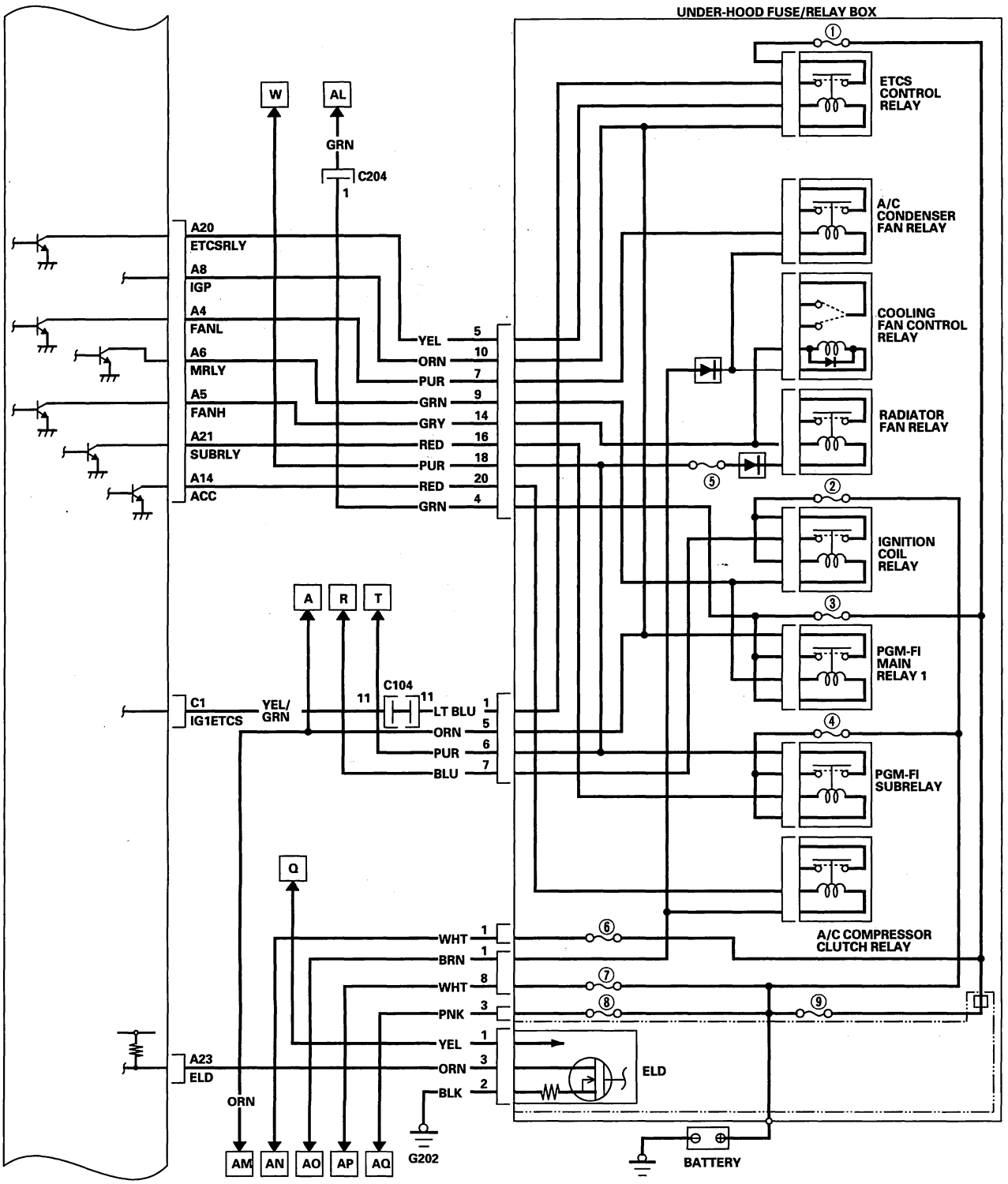


(cont'd)

Protected by AR



## System Description (cont'd)

### PCM Circuit Diagram (cont'd)

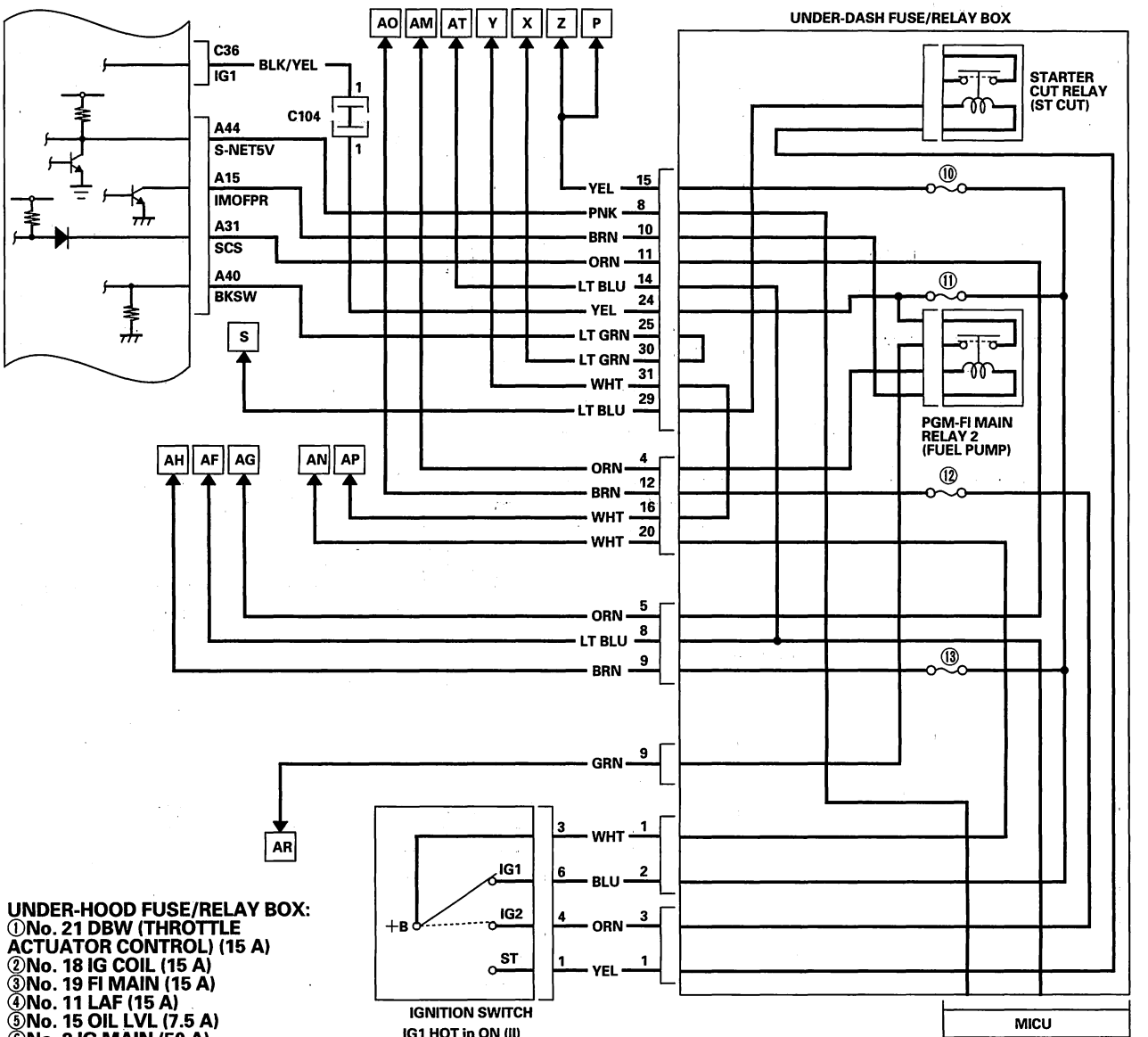


**UNDER-HOOD FUSE/RELAY BOX:**
①No. 21 DBW (THROTTLE ACTUATOR CONTROL) (15 A)
②No. 18 IG COIL (15 A)
③No. 19 FI MAIN (15 A)
④No. 11 LAF (15 A)
⑤No. 15 OIL LVL (7.5 A)
⑥No. 2 IG MAIN (50 A)
⑦No. 12 STOP & HORN (15 A)
⑧No. 17 VACUUM PUMP (15 A)
⑨No. 1 MAIN FUSE (100 A)

**UNDER-DASH FUSE/RELAY BOX:**
⑩No. 3 IG1 ACG (15 A)
⑪No. 2 FUEL PUMP (20 A)
⑫No. 36 IG2 HAC (A/C) (10 A)
⑬No. 10 METER (7.5 A)



BACK

Protected by AR

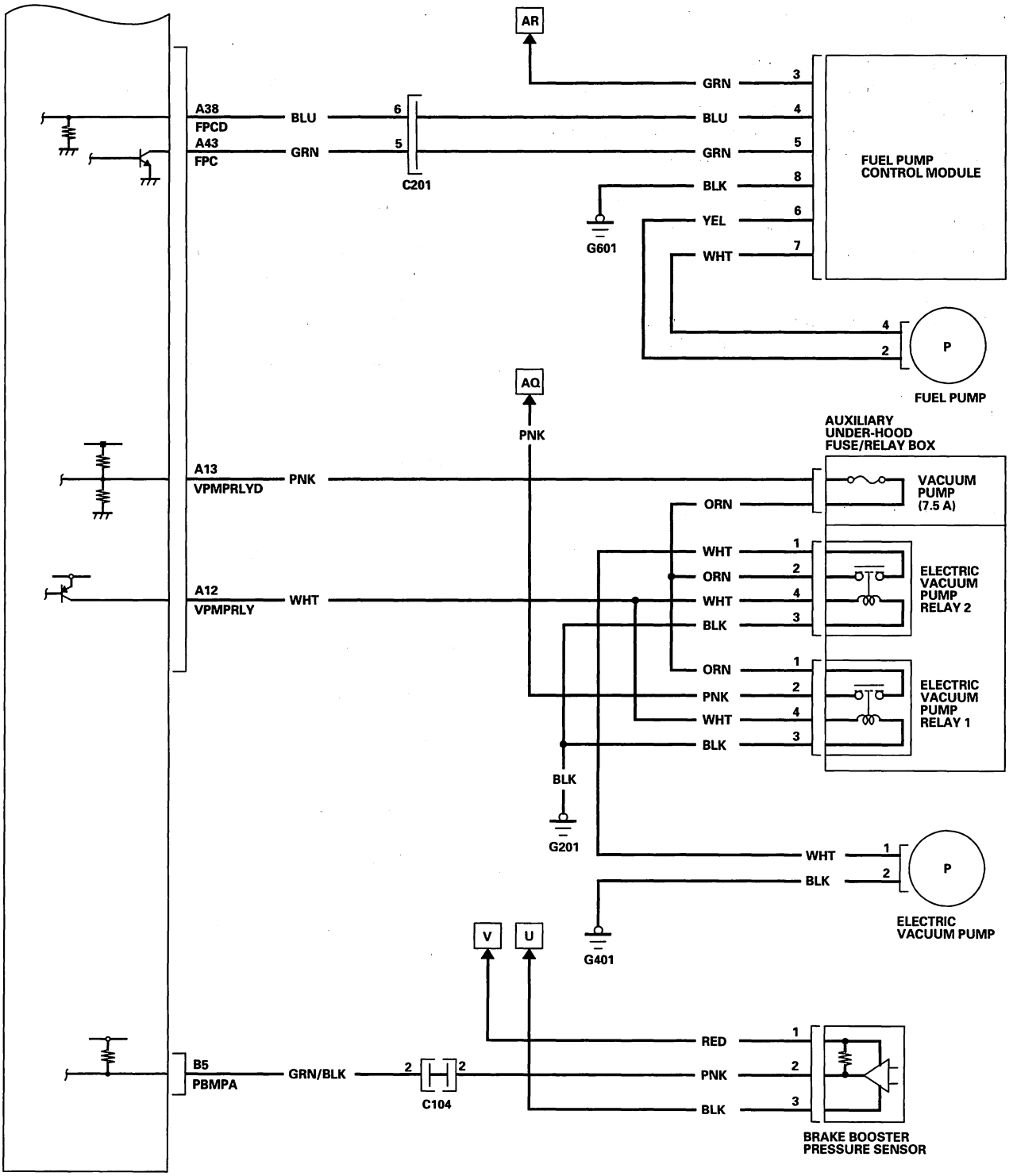

Protected by AR



## How to Set Readiness Codes

### Malfunction Indicator Lamp (MIL) Indication (In relation to Readiness Codes)

The vehicle has certain "readiness codes" that are part of the on-board diagnostics for the emissions systems. If the vehicle's battery has been disconnected or gone dead, if the DTCs have been cleared, or if the PCM has been reset, these readiness codes are reset to incomplete. In some states, part of the emissions testing is to make sure these codes are set to complete. If all of them are not set to complete, the vehicle may fail the emission test, or the test cannot be finished.

To check if the readiness codes are set to complete, turn the ignition switch ON (II), but do not start the engine. The MIL will come on for 15—20 seconds. If it then goes off, the readiness codes are set to complete. If it flashes five times, one or more readiness codes are not set to complete. To set readiness codes from incomplete to complete, do the procedure for the appropriate code.

To check the status of a specific DTC system, check the OBD status in the DTC MENU with the HDS (see page 11-9). This screen displays the code, the current data list of the enable criteria, and the status of the readiness testing.

### Catalytic Converter Monitor and Readiness Code

NOTE:
- Do not turn the ignition switch off during the procedure.
- All readiness codes are cleared when the battery is disconnected, if the DTCs have been cleared, or if the PCM is reset with the HDS.
- Low ambient temperatures or excessive stop-and-go traffic may increase the drive time needed to switch the readiness code from incomplete to complete.
- The readiness code will not switch to complete until all the enable criteria are met.
- If a fault in the secondary HO2S system caused the MIL to come on, the readiness code cannot be set to complete until you correct the fault.

**Enable Criteria**

- Engine coolant temperature (ECT SENSOR 1) at 158 °F (70 °C) or more.
- Intake air temperature (IAT SENSOR 1) at 20 °F (—7 °C) or more.
- Vehicle speed (VSS) above 25 mph (40 km/h).

**Procedure**

1. Connect the HDS to the vehicle's data link connector (DLC), and bring up the READINESS CODEs screen for Catalyst in the DTCs MENU.

2. Start the engine.

3. Test-drive the vehicle under stop-and-go conditions with short periods of steady cruise. After about 5 miles (8 km), the readiness code should switch to complete.

4. If the readiness code is still not set to complete, check for a Temporary DTC with the HDS. If there is no DTC, one or more of the enable criteria were probably not met; repeat the procedure.



BACK

Protected by AR

## Evaporative Emission (EVAP) Control System Monitor and Readiness Code

NOTE: All readiness codes are cleared when the battery is disconnected, if the DTCs have been cleared, or if the PCM is reset with the HDS.

**Enable Criteria**

- Battery voltage is more than 10.5 V.
- Engine at idle.
- Engine coolant temperature (ECT SENSOR 1 and 2) between 176 °F (80 °C) and 212 °F (100 °C).
- Vehicle speed (VSS) 0 mph (0 km/h).
- Intake air temperature (IAT SENSOR 1) between 32 °F (0 °C) and 212 °F (100 °C).

**Procedure**

1. Connect the HDS to the DLC.
2. Start the engine.
3. Select EVAP TEST in the INSPECTION MENU with the HDS, then select the FUNCTION TEST in the EVAP TEST MENU.
   - If the result is normal, readiness is complete.
   - If the result is not normal, go to the next step.
4. Check for a Temporary DTC. If there is no DTC, one or more of the enable criteria were probably not met; repeat the procedure.

## Air Fuel Ratio (A/F) Sensor Monitor and Readiness Code

NOTE:
- Do not turn the ignition switch off during the procedure.
- All readiness codes are cleared when the battery is disconnected, if the DTCs have been cleared, or if the PCM is reset with the HDS.

**Enable Criteria**

Engine coolant temperature (ECT SENSOR 1) at 140 °F (60 °C) or more.

**Procedure**

1. Start the engine.
2. Test-drive the vehicle under stop-and-go conditions with short periods of steady cruise. During the drive, decelerate (with the throttle fully closed) for 5 seconds. After about 3.5 miles (5.6 km), the readiness code should switch from incomplete to complete.
3. Check the readiness codes screen for the AIR FUEL RATIO (A/F) SENSOR in the DTCs MENU with the HDS.
   - If the screen shows complete, readiness is complete.
   - If the screen shows not complete, go to the next step.
4. Check for a Temporary DTC. If there is no DTC, the enable criteria was probably not met. Select the DATA LIST MENU. Check the ECT SENSOR 1 in the ALL DATA LIST with the HDS. If ECT SENSOR 1 is less than 140 °F (60 °C), run the engine until it is more than 140 °F (60 °C), then repeat the procedure.

(cont'd)

Protected by AR



## How to Set Readiness Codes (cont'd)

### Air Fuel Ratio (A/F) Sensor Heater Monitor Readiness Code

NOTE: All readiness codes are cleared when the battery is disconnected, if the DTCs have been cleared, or if the PCM is reset with the HDS.

**Procedure**

1. Start the engine, and let it idle for 1 minute. The readiness code should switch from incomplete to complete.

2. If the readiness code is still not set to complete, check for a Temporary DTC. If there is no DTC, repeat the procedure.

### Misfire Monitor and Readiness Code

- This readiness code is always set to available because misfiring is continuously monitored.
- Monitoring pauses, and the misfire counter resets, if the vehicle is driven over a rough road.
- Monitoring also pauses, and the misfire counter holds at its current value, if the throttle position changes more than a predetermined value, or if driving conditions fall outside the range of any related enable criteria.

### Fuel System Monitor and Readiness Code

- This readiness code is always set to available because the fuel system is continuously monitored during closed loop operation.
- Monitoring pauses when the catalytic converter, EVAP control system, and A/F sensor monitors are active.
- Monitoring also pauses when any related enable criteria are not being met. Monitoring resumes when the enable criteria is again being met.

### Comprehensive Component Monitor and Readiness Code

This readiness code is always set to available because the comprehensive component monitor is continuously running whenever the engine is cranking or running.



BACK

Protected by AR



## Component Location Index

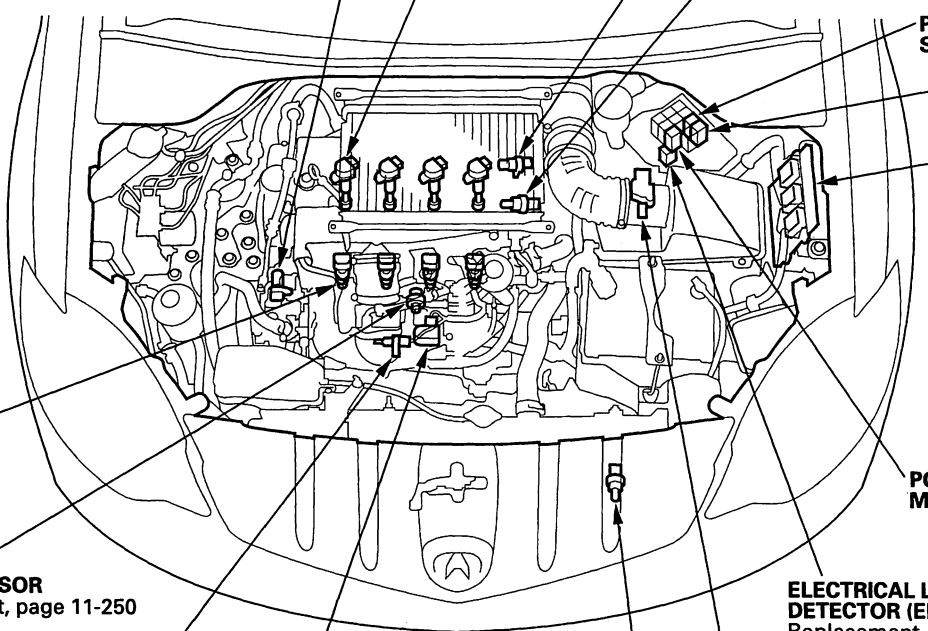


(cont'd)

Protected by AR



## Component Location Index (cont'd)

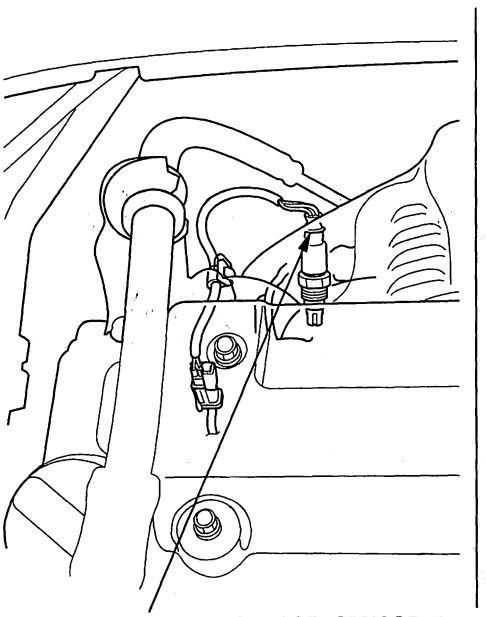

**AIR FUEL RATIO (A/F) SENSOR (SENSOR 1)**
Replacement, page 11-245

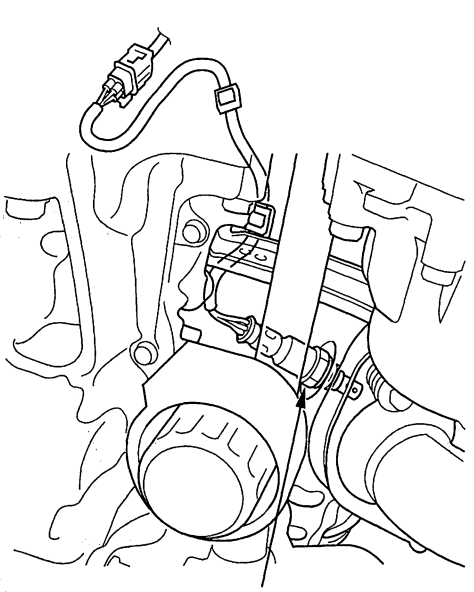

**SECONDARY HEATED OXYGEN SENSOR (SECONDARY HO2S) (SENSOR 2)**
Replacement, page 11-245

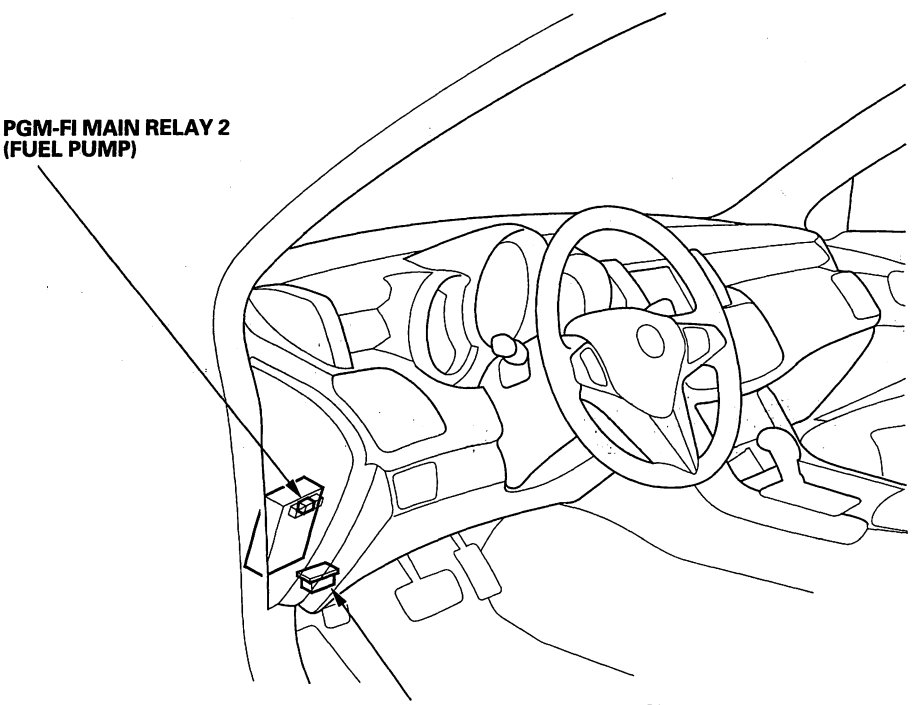


**DATA LINK CONNECTOR (DLC)**
General Troubleshooting Information, page 11-3
Circuit Troubleshooting, page 11-229



BACK

Protected by AR

## DTC Troubleshooting

### DTC P0096: IAT Sensor 2 Circuit Range/ Performance Problem

NOTE: Before you troubleshoot, record all freeze data and any on-board snapshot, and review the general troubleshooting information (see page 11-3).

1. Check for poor connections or loose terminals at ECT sensors 1/2 and IAT sensor 2.

   *Are the connections and terminals OK?*

   **YES**—Go to step 2.

   **NO**—Repair the connectors or terminals, then go to step 15.

2. Remove the IAT sensor 2 (see page 11-248).

3. Allow IAT sensor 2 to cool to ambient temperature.

4. Note the ambient temperature.

5. Connect the IAT sensor 2 to the 2P connector, but do not install the sensor onto the intake manifold.

6. Turn the ignition switch ON (II).

7. Note the value of IAT SENSOR 2 quickly in the DATA LIST with the HDS.

8. Compare the value of IAT SENSOR 2 and the ambient temperature.

   *Does the value of IAT SENSOR 2 differ 5.4 °F (3 °C) or more?*

   **YES**—Go to step 13.

   **NO**—Go to step 9.

9. Disconnect IAT sensor 2 from its 2P connector.

10. Using a heat gun, blow hot air on IAT sensor 2 for a few seconds. Do not apply the heat longer than a few seconds or you will damage the sensor.

11. Connect IAT sensor 2 to its 2P connector, but do not install the sensor onto the intake manifold.

12. Check IAT SENSOR 2 in the DATA LIST with the HDS.

    *Does IAT SENSOR 2 change 58 °F (32 °C) or more?*

    **YES**—Intermittent failure, the system is OK at this time. Check for poor connections or loose terminals at IAT sensor 2 and the PCM. ■

    **NO**—Go to step 13.

13. Turn the ignition switch OFF.

14. Replace IAT sensor 2 (see page 11-248).

15. Turn the ignition switch ON (II).

16. Reset the PCM with the HDS.

17. Do the PCM idle learn procedure (see page 11-339).

18. Check for Temporary DTCs or DTCs with the HDS.

    *Is DTC P0096 indicated?*

    **YES**—Check for poor connections or loose terminals at IAT sensor 2 and the PCM, then go to step 1.

    **NO**—Troubleshooting is complete. If any other Temporary DTCs or DTCs are indicated, go to the indicated DTC's troubleshooting. ■

Protected by AR



## DTC Troubleshooting (cont'd)

### DTC P0097: IAT Sensor 2 Circuit Low Voltage

NOTE: Before you troubleshoot, record all freeze data and any on-board snapshot, and review the general troubleshooting information (see page 11-3).

1. Turn the ignition switch ON (II).
2. Check IAT SENSOR 2 in the DATA LIST with the HDS.

   *Is about 356 °F (180 °C) or more, or 0.08 V or less indicated?*

   **YES**—Go to step 3.

   **NO**—Intermittent failure, the system is OK at this time. Check for poor connections or loose terminals at IAT sensor 2 and the PCM.■
3. Turn the ignition switch OFF.
4. Disconnect IAT sensor 2 2P connector.
5. Turn the ignition switch ON (II).
6. Check IAT SENSOR 2 in the DATA LIST with the HDS.

   *Is about 356 °F (180 °C) or more, or 0.08 V or less indicated?*

   **YES**—Go to step 7.

   **NO**—Go to step 11.
7. Turn the ignition switch OFF.
8. Jump the SCS line with the HDS.
9. Disconnect PCM connector B (44P).
10. Check for continuity between IAT sensor 2P connector terminal No. 2 and body ground.

**IAT SENSOR 2 2P CONNECTOR**

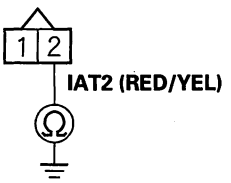


Wire side of female terminals

*Is there continuity?*

**YES**—Repair short in the wire between IAT sensor 2 and the PCM (B31), then go to step 13.

**NO**—Go to step 18.

11. Turn the ignition switch OFF.
12. Replace IAT sensor 2 (see page 11-248).
13. Reconnect all connectors.
14. Turn the ignition switch ON (II).
15. Reset the PCM with the HDS.
16. Do the PCM idle learn procedure (see page 11-339).
17. Check for Temporary DTCs or DTCs with the HDS.

    *Is DTC P0097 indicated?*

    **YES**—Check for poor connections or loose terminals at IAT sensor 2 and the PCM, then go to step 1.

    **NO**—Troubleshooting is complete. If any other Temporary DTCs or DTCs are indicated, go to the indicated DTC's troubleshooting.■



BACK

Protected by AR

18. Reconnect all connectors.

19. Update the PCM if it does not have the latest software (see page 11-7), or substitute a known-good PCM (see page 11-8).

20. Check for Temporary DTCs or DTCs with the HDS.

    *Is DTC P0097 indicated?*

    **YES**—Check for poor connections or loose terminals at IAT sensor 2 and the PCM. If the PCM was updated, substitute a known-good PCM (see page 11-8), then recheck. If the PCM was substituted, go to step 1.

    **NO**—If the PCM was updated, troubleshooting is complete. If the PCM was substituted, replace the original PCM (see page 11-252). If any other Temporary DTCs or DTCs are indicated, go to the indicated DTC's troubleshooting. ■

Protected by AR



## DTC Troubleshooting (cont'd)

### DTC P0098: IAT Sensor 2 Circuit High Voltage

NOTE: Before you troubleshoot, record all freeze data and any on-board snapshot, and review the general troubleshooting information (see page 11-3).

1. Turn the ignition switch ON (II).
2. Check IAT SENSOR 2 in the DATA LIST with the HDS.

   *Is about −40 °F (−40 °C) or less, or 4.90 V or more indicated?*

   **YES**—Go to step 3.

   **NO**—Intermittent failure, the system is OK at this time. Check for poor connections or loose terminals at IAT sensor 2 and the PCM. ■
3. Turn the ignition switch OFF.
4. Disconnect IAT sensor 2 2P connector.
5. Connect IAT sensor 2 2P connector terminals No. 1 and No. 2 with a jumper wire.

**IAT SENSOR 2 2P CONNECTOR**

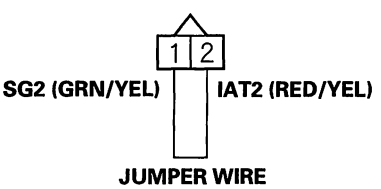


Wire side of female terminals

6. Turn the ignition switch ON (II).
7. Check IAT SENSOR 2 in the DATA LIST with the HDS.

   *Is about −40 °F (−40 °C) or less, or 4.90 V or more indicated?*

   **YES**—Go to step 8.

   **NO**—Go to step 20
8. Turn the ignition switch OFF.
9. Remove the jumper wire from IAT sensor 2 2P connector.
10. Turn the ignition switch ON (II).
11. Measure voltage between IAT sensor 2 2P connector terminal No. 2 and body ground.

**IAT SENSOR 2 2P CONNECTOR**

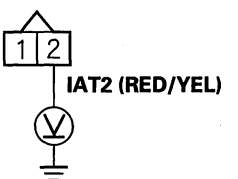


Wire side of female terminals

*Is there about 5 V?*

**YES**—Go to step 12.

**NO**—Go to step 16.



BACK

Protected by AR

12. Turn the ignition switch OFF.

13. Jump the SCS line with the HDS.

14. Disconnect PCM connector B (44P).

15. Check for continuity between IAT sensor 2 2P connector terminal No. 1 and PCM connector terminal B33.

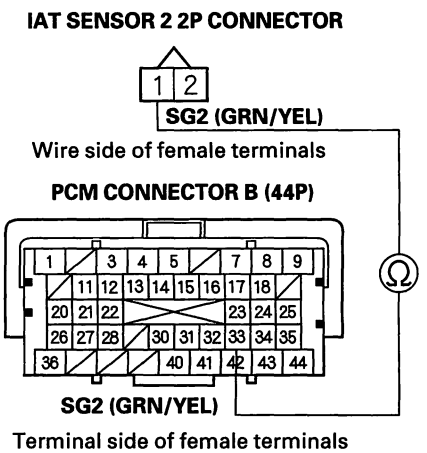


*Is there continuity?*

**YES**—Go to step 27.

**NO**—Repair open in the wire between the PCM (B33) and IAT sensor 2, then go to step 22.

16. Turn the ignition switch OFF.

17. Jump the SCS line with the HDS.

18. Disconnect PCM connector B (44P).

19. Check for continuity between IAT sensor 2 2P connector terminal No. 2 and PCM connector terminal B31.

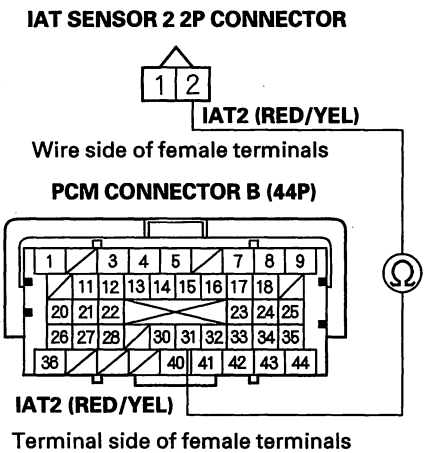


*Is there continuity?*

**YES**—Go to step 27.

**NO**—Repair open in the wire between the PCM (B31) and IAT sensor 2, then go to step 22.

(cont'd)

Protected by AR



## DTC Troubleshooting (cont'd)

20. Turn the ignition switch OFF.

21. Replace IAT sensor 2 (see page 11-248).

22. Reconnect all connectors.

23. Turn the ignition switch ON (II).

24. Reset the PCM with the HDS.

25. Do the PCM idle learn procedure (see page 11-339).

26. Check for Temporary DTCs or DTCs with the HDS.

    *Is DTC P0098 indicated?*

    **YES**—Check for poor connections or loose terminals at IAT sensor 2 and the PCM, then go to step 1.

    **NO**—Troubleshooting is complete. If any other Temporary DTCs or DTCs are indicated, go to the indicated DTC's troubleshooting.■

27. Reconnect all connectors.

28. Update the PCM if it does not have the latest software (see page 11-7), or substitute a known-good PCM (see page 11-8).

29. Check for Temporary DTCs or DTCs with the HDS.

    *Is DTC P0098 indicated?*

    **YES**—Check for poor connections or loose terminals at IAT sensor 2 and the PCM. If the PCM was updated, substitute a known-good PCM (see page 11-8), then recheck. If the PCM was substituted, go to step 1.

    **NO**—If the PCM was updated, troubleshooting is complete. If the PCM was substituted, replace the original PCM (see page 11-252). If any other Temporary DTCs or DTCs are indicated, go to the indicated DTC's troubleshooting.■



BACK

Protected by AR

## **DTC P0101:** MAF Sensor Circuit Range/ Performance Problem

NOTE:
- Before you troubleshoot, record all freeze data and any on-board snapshot, and review the general troubleshooting information (see page 11-3).
- If DTC P2228 and/or P2229 are stored at the same time as DTC P0101, troubleshoot those DTCs first, then recheck for DTC P0101.

1. Check for poor connections or damage to these parts:

   - PCV hose
   - Air cleaner
   - Intake air duct (air flow tube)
   - Intake manifold
   - Purge (PCS) line
   - Brake booster
   - Brake booster hose
   - Turbocharger
   - Intake air duct (turbocharger inlet tube and pipe)
   - Intake air duct (turbocharger outlet pipe)
   - Charge air cooler
   - Intake air duct (charge air cooler inlet hose)
   - Intake air duct (charge air cooler outlet tube)
   - Turbocharger bypass control solenoid valve
   - Pressure regulator (vacuum hose line)

   *Are the parts OK?*

   **YES**—Go to step 2.

   **NO**—Repair or replace the damaged parts, then go to step 15.

2. Check for damage or looseness at the air duct in the air cleaner.

   *Is it OK?*

   **YES**—Go to step 3.

   **NO**—Reconnect or replace the air duct in the air cleaner, then go to step 15.

3. Check for a dirty air cleaner element.

   *Is it dirty?*

   **YES**—Replace the air cleaner element (see page 11-395), then go to step 15.

   **NO**—Go to step 4.

4. Turn the ignition switch OFF.

5. Turn the ignition switch ON (II).

6. Check the MAF SENSOR in the DATA LIST with the HDS.

   *Is there about 0.2 gm/s or 0.5 V?*

   **YES**—Go to step 7.

   **NO**—Go to step 13.

7. Start the engine.

8. Vary the engine speed between 2,000 rpm and 3,000 rpm.

9. Check the MAF SENSOR in the DATA LIST with the HDS.

   *Does the reading change?*

   **YES**—Go to step 10.

   **NO**—Go to step 13.

10. Hold the engine speed at 3,000 rpm without load (in Park or neutral) until the radiator fan comes on, then let it idle.

11. Test-drive the vehicle for several minutes in the range of these recorded freeze data parameters:

    - ENGINE SPEED
    - VSS
    - MAP SENSOR
    - MAF SENSOR

12. Monitor the OBD STATUS for DTC P0101 in the DTCs MENU with the HDS.

    *Does the screen indicate FAILED?*

    **YES**—Go to step 13.

    **NO**—If the screen indicates PASSED, intermittent failure, the system is OK at this time. Check for poor connections or loose terminals at the MAF sensor and the PCM. If the screen indicates NOT COMPLETED, go to step 11 and recheck.

(cont'd)

Protected by AR



## DTC Troubleshooting (cont'd)

13. Turn the ignition switch OFF.

14. Replace MAF sensor/IAT sensor 1 (see page 11-247).

15. Turn the ignition switch ON (II).

16. Reset the PCM with the HDS.

17. Do the PCM idle learn procedure (see page 11-339).

18. Test-drive the vehicle for several minutes in the range of these recorded freeze data parameters:

    - ENGINE SPEED
    - VSS
    - MAP SENSOR
    - MAF SENSOR

19. Check for Temporary DTCs or DTCs with the HDS.

    *Is DTC P0101 indicated?*

    **YES**—Check for poor connections or loose terminals at the MAF sensor and the PCM, then go to step 1.

    **NO**—Go to step 20.

20. Monitor the OBD STATUS for DTC P0101 in the DTCs MENU with the HDS.

    *Does the screen indicate PASSED?*

    **YES**—Troubleshooting is complete. If any other Temporary DTCs or DTCs were indicated in step 19, go to the indicated DTC's troubleshooting.■

    **NO**—If the screen indicates FAILED, check for poor connections or loose terminals at the MAF sensor and the PCM, then go to step 1. If the screen indicates NOT COMPLETED, go to step 18.



BACK

Protected by AR

## DTC P0102: MAF Sensor Circuit Low Voltage

NOTE: Before you troubleshoot, record all freeze data and any on-board snapshot, and review the general troubleshooting information (see page 11-3).

1. Turn the ignition switch ON (II), and wait 2 seconds.

2. Check the MAF SENSOR in the DATA LIST with the HDS.

   *Is about 0 gm/s, or 0.1 V or less indicated?*

   **YES**—Go to step 3.

   **NO**—Intermittent failure, the system is OK at this time. Check for poor connections or loose terminals at the MAF sensor and the PCM. ■

3. Check the No. 3 IG1 ACG (15 A) fuse in the under-dash fuse/relay box.

   *Is the fuse OK?*

   **YES**—Go to step 4.

   **NO**—Repair short in the wire between the MAF sensor and the No. 3 IG1 ACG (15 A) fuse. Also replace the No. 3 IG1 ACG (15 A) fuse, then go to step 20.

4. Turn the ignition switch OFF.

5. Disconnect the MAF sensor/IAT sensor 1 5P connector.

6. Turn the ignition switch ON (II).

7. Measure voltage between MAF sensor/IAT sensor 1 5P connector terminal No. 5 and body ground.

**MAF SENSOR/IAT SENSOR 1 5P CONNECTOR**

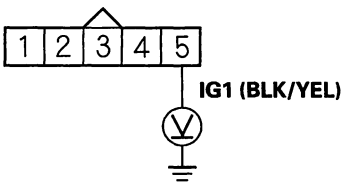


Wire side of female terminals

*Is there battery voltage?*

**YES**—Go to step 8.

**NO**—Repair open in the wire between the No. 3 IG1 ACG (15 A) fuse and the MAF sensor, then go to step 20.

8. Turn the ignition switch OFF.

9. Measure resistance between MAF sensor/IAT sensor 1 5P connector terminal No. 3 and body ground.

**MAF SENSOR/IAT SENSOR 1 5P CONNECTOR**

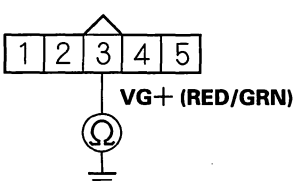


Wire side of female terminals

*Is there 190—210 kΩ?*

**YES**—Go to step 14.

**NO**—Go to step 10.

(cont'd)

Protected by AR



## DTC Troubleshooting (cont'd)

10. Jump the SCS line with the HDS.

11. Disconnect PCM connector B (44P).

12. Check for continuity between PCM connector terminal B30 and body ground.

**PCM CONNECTOR B (44P)**

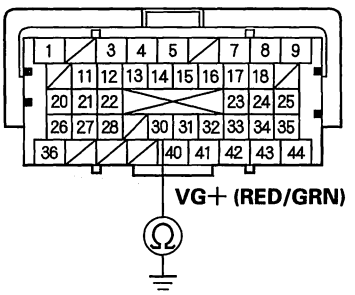


Terminal side of female terminals

*Is there continuity?*

**YES**—Repair short in the wire between the PCM (B30) and the MAF sensor, then go to step 21.

**NO**—Go to step 13.

13. Check for continuity between MAF sensor/IAT sensor 1 5P connector terminal No. 3 and PCM connector terminal B30.

**MAF SENSOR/IAT SENSOR 1 5P CONNECTOR**

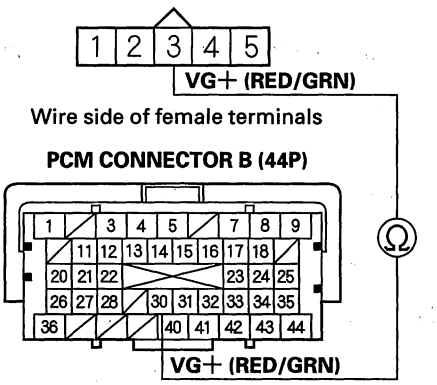


Terminal side of female terminals

*Is there continuity?*

**YES**—Go to step 26.

**NO**—Repair open in the wire between the PCM (B30) and the MAF sensor, then go to step 21.



BACK

Protected by AR

14. Substitute a known-good MAF sensor/IAT sensor 1 (see page 11-247).

15. Reconnect all connectors.

16. Turn the ignition switch ON (II).

17. Clear the DTC with the HDS.

18. Start the engine. Hold the engine speed at 2,000 rpm without load (in Park or neutral).

19. Check for Temporary DTCs or DTCs with the HDS.

    *Is DTC P0102 indicated?*

    **YES**—Go to step 27.

    **NO**—Replace the original MAF sensor/IAT sensor 1 (see page 11-247), then go to step 20.

20. Turn the ignition switch OFF.

21. Reconnect all connectors.

22. Turn the ignition switch ON (II).

23. Reset the PCM with the HDS.

24. Do the PCM idle learn procedure (see page 11-339).

25. Check for Temporary DTCs or DTCs with the HDS.

    *Is DTC P0102 indicated?*

    **YES**—Check for poor connections or loose terminals at the MAF sensor/IAT sensor 1 and the PCM, then go to step 1.

    **NO**—Troubleshooting is complete. If any other Temporary DTCs or DTCs are indicated, go to the indicated DTC's troubleshooting. ■

26. Reconnect all connectors.

27. Update the PCM if it does not have the latest software (see page 11-7), or substitute a known-good PCM (see page 11-8).

28. Check for Temporary DTCs or DTCs with the HDS.

    *Is DTC P0102 indicated?*

    **YES**—Check for poor connections or loose terminals at the MAF sensor/IAT sensor 1 and the PCM. If the PCM was updated, substitute a known-good PCM (see page 11-8), then recheck. If the PCM was substituted, go to step 1.

    **NO**—If the PCM was updated, troubleshooting is complete. If the PCM was substituted, replace the original PCM (see page 11-252). If any other Temporary DTCs or DTCs are indicated, go to the indicated DTC's troubleshooting. ■

Protected by AR



## DTC Troubleshooting (cont'd)

### DTC P0103: MAF Sensor Circuit High Voltage

NOTE: Before you troubleshoot, record all freeze data and any on-board snapshot, and review the general troubleshooting information (see page 11-3).

1. Turn the ignition switch ON (II), and wait 2 seconds.
2. Check the MAF SENSOR in the DATA LIST with the HDS.

   *Is about 202 gm/s, or 4.89 V or more indicated?*

   **YES**—Go to step 3.

   **NO**—Intermittent failure, the system is OK at this time. Check for poor connections or loose terminals at the MAF sensor and the PCM.■
3. Turn the ignition switch OFF.
4. Jump the SCS line with the HDS.
5. Disconnect the MAF sensor/IAT sensor 1 5P connector.
6. Disconnect PCM connector B (44P).
7. Check for continuity between MAF sensor/IAT sensor 1 5P connector terminal No. 4 and PCM connector terminal B32.

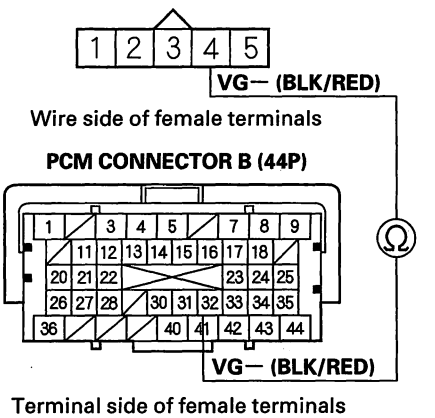


*Is there continuity?*

**YES**—Go to step 8.

**NO**—Repair open in the wire between the PCM (B32) and the MAF sensor, then go to step 15.



BACK

Protected by AR

8. Reconnect PCM connector B (44P).

9. Connect MAF sensor/IAT sensor 1 5P connector terminals No. 3 and No. 4 with a jumper wire.

**MAF SENSOR/IAT SENSOR 1 5P CONNECTOR**

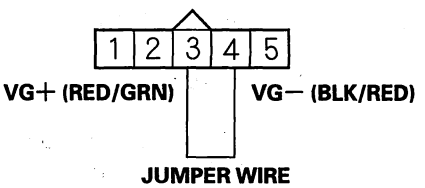


Wire side of female terminals

10. Turn the ignition switch ON (II).

11. Clear the DTC with the HDS.

12. Check for Temporary DTCs or DTCs with the HDS.

    *Is DTC P0103 indicated?*

    **YES**—Go to step 20.

    **NO**—Go to step 13.

13. Turn the ignition switch OFF.

14. Replace the MAF sensor/IAT sensor 1 (see page 11-247).

15. Reconnect all connectors.

16. Turn the ignition switch ON (II).

17. Reset the PCM with the HDS.

18. Do the PCM idle learn procedure (see page 11-339).

19. Check for Temporary DTCs or DTCs with the HDS.

    *Is DTC P0103 indicated?*

    **YES**—Check for poor connections or loose terminals at the MAF sensor/IAT sensor 1 and the PCM, then go to step 1.

    **NO**—Troubleshooting is complete. If any other Temporary DTCs or DTCs are indicated, go to the indicated DTC's troubleshooting. ■

20. Turn the ignition switch OFF.

21. Reconnect all connectors.

22. Update the PCM if it does not have the latest software (see page 11-7), or substitute a known-good PCM (see page 11-8).

23. Check for Temporary DTCs or DTCs with the HDS.

    *Is DTC P0103 indicated?*

    **YES**—Check for poor connections or loose terminals at the MAF sensor/IAT sensor 1 and the PCM. If the PCM was updated, substitute a known-good PCM (see page 11-8), then recheck. If the PCM was substituted, go to step 1.

    **NO**—If the PCM was updated, troubleshooting is complete. If the PCM was substituted, replace the original PCM (see page 11-252). If any other Temporary DTCs or DTCs are indicated, go to the indicated DTC's troubleshooting. ■

Protected by AR



## DTC Troubleshooting (cont'd)

### DTC P0107: MAP Sensor Circuit Low Voltage

NOTE: Before you troubleshoot, record all freeze data and any on-board snapshot, and review the general troubleshooting information (see page 11-3).

1. Turn the ignition switch ON (II).
2. Check the MAP SENSOR in the DATA LIST with the HDS.

   *Is about 3 kPa (1.0 in.Hg, 26 mmHg), or 0.23 V or less indicated?*

   **YES**—Go to step 3.

   **NO**—Intermittent failure, the system is OK at this time. Check for poor connections or loose terminals at the MAP sensor and the PCM. ■
3. Turn the ignition switch OFF.
4. Disconnect the MAP sensor 3P connector.
5. Turn the ignition switch ON (II).
6. Check the MAP SENSOR in the DATA LIST with the HDS.

   *Is about 3 kPa (1.0 in.Hg, 26 mmHg), or 0.23 V or less indicated?*

   **YES**—Go to step 12.

   **NO**—Go to step 7.
7. Measure voltage between MAP sensor 3P connector terminals No. 1 and No. 3.

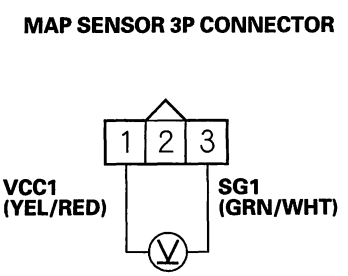


*Is there about 5 V?*

**YES**—Go to step 16.

**NO**—Go to step 8.

8. Turn the ignition switch OFF.
9. Jump the SCS line with the HDS.
10. Disconnect PCM connector C (44P).
11. Check for continuity between PCM connector terminal C13 and MAP sensor 3P connector terminal No. 1.

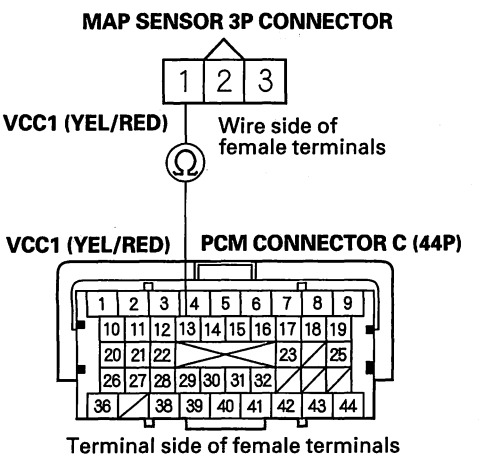


*Is there continuity?*

**YES**—Go to step 23.

**NO**—Repair open in the wire between the PCM (C13) and the MAP sensor, then go to step 18.



BACK

Protected by AR

12. Turn the ignition switch OFF.

13. Jump the SCS line with the HDS.

14. Disconnect PCM connector C (44P).

15. Check for continuity between MAP sensor 3P connector terminal No. 2 and body ground.

**MAP SENSOR 3P CONNECTOR**

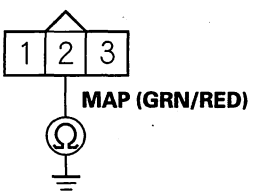


Wire side of female terminals

*Is there continuity?*

**YES**—Repair short in the wire between the PCM (C11) and the MAP sensor, then go to step 18.

**NO**—Go to step 23.

16. Turn the ignition switch OFF.

17. Replace the MAP sensor (see page 11-247).

18. Reconnect all connectors.

19. Turn the ignition switch ON (II).

20. Reset the PCM with the HDS.

21. Do the PCM idle learn procedure (see page 11-339).

22. Check for Temporary DTCs or DTCs with the HDS.

*Is DTC P0107 indicated?*

**YES**—Check for poor connections or loose terminals at the MAP sensor and the PCM, then go to step 1.

**NO**—Troubleshooting is complete. If any other Temporary DTCs or DTCs are indicated, go to the indicated DTC's troubleshooting. ■

23. Reconnect all connectors.

24. Update the PCM if it does not have the latest software (see page 11-7), or substitute a known-good PCM (see page 11-8).

25. Check for Temporary DTCs or DTCs with the HDS.

*Is DTC P0107 indicated?*

**YES**—Check for poor connections or loose terminals at the MAP sensor and the PCM. If the PCM was updated, substitute a known-good PCM (see page 11-8), then recheck. If the PCM was substituted, go to step 1.

**NO**—If the PCM was updated, troubleshooting is complete. If the PCM was substituted, replace the original PCM (see page 11-252). If any other Temporary DTCs or DTCs are indicated, go to the indicated DTC's troubleshooting. ■

Protected by AR



## DTC Troubleshooting (cont'd)

### DTC P0108: MAP Sensor Circuit High Voltage

NOTE: Before you troubleshoot, record all freeze data and any on-board snapshot, and review the general troubleshooting information (see page 11-3).

1. Turn the ignition switch ON (II).
2. Check the MAP SENSOR in the DATA LIST with the HDS.

   *Is about 160 kPa (47.1 in.Hg, 1,197 mmHg), or 4.49 V or more indicated?*

   **YES**—Go to step 3.

   **NO**—Intermittent failure, the system is OK at this time. Check for poor connections or loose terminals at the MAP sensor and the PCM.■
3. Turn the ignition switch OFF.
4. Disconnect the MAP sensor 3P connector.
5. Connect MAP sensor 3P connector terminals No. 2 and No. 3 with a jumper wire.

**MAP SENSOR 3P CONNECTOR**

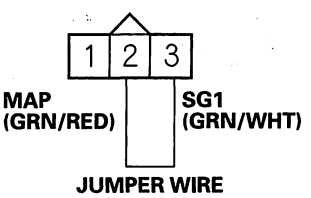


Wire side of female terminals

6. Turn the ignition switch ON (II).
7. Check the MAP SENSOR in the DATA LIST with the HDS.

   *Is about 160 kPa (47.1 in.Hg, 1,197 mmHg), or 4.49 V or more indicated?*

   **YES**—Go to step 8.

   **NO**—Go to step 18.
8. Remove the jumper wire from the MAP sensor 3P connector.
9. Measure voltage between MAP sensor 3P connector terminals No. 1 and No. 3.

**MAP SENSOR 3P CONNECTOR**

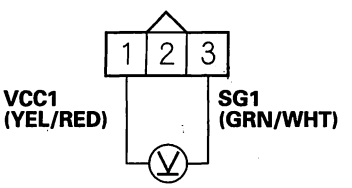


Wire side of female terminals

*Is there about 5 V?*

**YES**—Go to step 14.

**NO**—Go to step 10.



BACK

Protected by AR

10. Turn the ignition switch OFF.

11. Jump the SCS line with the HDS.

12. Disconnect PCM connector C (44P).

13. Check for continuity between PCM connector terminal C14 and MAP sensor 3P connector terminal No. 3.

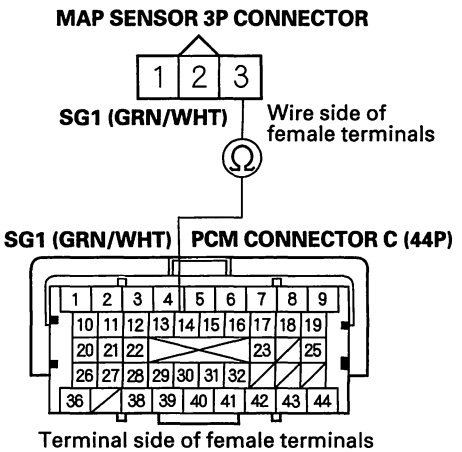


*Is there continuity?*

**YES**—Go to step 25.

**NO**—Repair open in the wire between the PCM (C14) and the MAP sensor, then go to step 20.

14. Turn the ignition switch OFF.

15. Jump the SCS line with the HDS.

16. Disconnect PCM connector C (44P).

17. Check for continuity between PCM connector terminal C11 and MAP sensor 3P connector terminal No. 2.

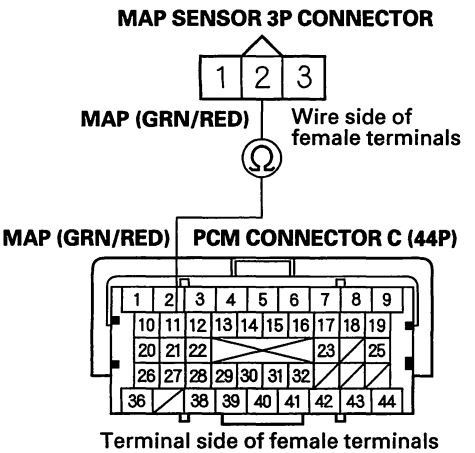


*Is there continuity?*

**YES**—Go to step 25.

**NO**—Repair open in the wire between the PCM (C11) and the MAP sensor, then go to step 20.

(cont'd)

Protected by AR



## DTC Troubleshooting (cont'd)

18. Turn the ignition switch OFF.

19. Replace the MAP sensor (see page 11-247).

20. Reconnect all connectors.

21. Turn the ignition switch ON (II).

22. Reset the PCM with the HDS.

23. Do the PCM idle learn procedure (see page 11-339).

24. Check for Temporary DTCs or DTCs with the HDS.

    *Is DTC P0108 indicated?*

    **YES**—Check for poor connections or loose terminals at the MAP sensor and the PCM, then go to step 1.

    **NO**—Troubleshooting is complete. If any other Temporary DTCs or DTCs are indicated, go to the indicated DTC's troubleshooting. ■

25. Reconnect all connectors.

26. Update the PCM if it does not have the latest software (see page 11-7), or substitute a known-good PCM (see page 11-8).

27. Check for Temporary DTCs or DTCs with the HDS.

    *Is DTC P0108 indicated?*

    **YES**—Check for poor connections or loose terminals at the MAP sensor and the PCM. If the PCM was updated, substitute a known-good PCM (see page 11-8), then recheck. If the PCM was substituted, go to step 1.

    **NO**—If the PCM was updated, troubleshooting is complete. If the PCM was substituted, replace the original PCM (see page 11-252). If any other Temporary DTCs or DTCs are indicated, go to the indicated DTC's troubleshooting. ■



BACK

Protected by AR

## DTC P0112: IAT Sensor 1 Circuit Low Voltage

NOTE: Before you troubleshoot, record all freeze data and any on-board snapshot, and review the general troubleshooting information (see page 11-3).

1. Turn the ignition switch ON (II).
2. Check IAT SENSOR 1 in the DATA LIST with the HDS.

   *Is about 356 °F (180 °C) or more, or 0.08 V or less indicated?*

   **YES**—Go to step 3.

   **NO**—Intermittent failure, the system is OK at this time. Check for poor connections or loose terminals at IAT sensor 1 and the PCM. ■
3. Turn the ignition switch OFF.
4. Disconnect the MAF sensor/IAT sensor 1 5P connector.
5. Turn the ignition switch ON (II).
6. Check the IAT SENSOR 1 in the DATA LIST with the HDS.

   *Is about 356 °F (180 °C) or more, or 0.08 V or less indicated?*

   **YES**—Go to step 7.

   **NO**—Go to step 11.
7. Turn the ignition switch OFF.
8. Jump the SCS line with the HDS.
9. Disconnect PCM connector C (44P).
10. Check for continuity between MAF sensor/IAT sensor 1 5P connector terminal No. 2 and body ground.

**MAF SENSOR/IAT SENSOR 1 5P CONNECTOR**

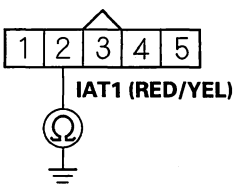


Wire side of female terminals

*Is there continuity?*

**YES**—Repair short in the wire between the IAT sensor 1 and the PCM (A28), then go to step 13.

**NO**—Go to step 18.

11. Turn the ignition switch OFF.
12. Replace the MAF sensor/IAT sensor 1 (see page 11-247).
13. Reconnect all connectors.
14. Turn the ignition switch ON (II).
15. Reset the PCM with the HDS.
16. Do the PCM idle learn procedure (see page 11-339).
17. Check for Temporary DTCs or DTCs with the HDS.

    *Is DTC P0112 indicated?*

    **YES**—Check for poor connections or loose terminals at the IAT sensor 1 and the PCM, then go to step 1.

    **NO**—Troubleshooting is complete. If any other Temporary DTCs or DTCs are indicated, go to the indicated DTC's troubleshooting. ■

(cont'd)

Protected by AR



## DTC Troubleshooting (cont'd)

18. Reconnect all connectors.

19. Update the PCM if it does not have the latest software (see page 11-7), or substitute a known-good PCM (see page 11-8).

20. Check for Temporary DTCs or DTCs with the HDS.

    *Is DTC P0112 indicated?*

    **YES**—Check for poor connections or loose terminals at the MAF sensor/IAT sensor 1 and the PCM. If the PCM was updated, substitute a known-good PCM (see page 11-8), then recheck. If the PCM was substituted, go to step 1.

    **NO**—If the PCM was updated, troubleshooting is complete. If the PCM was substituted, replace the original PCM (see page 11-252). If any other Temporary DTCs or DTCs are indicated, go to the indicated DTC's troubleshooting. ■



BACK

Protected by AR

## DTC P0113: IAT Sensor 1 Circuit High Voltage

NOTE: Before you troubleshoot, record all freeze data and any on-board snapshot, and review the general troubleshooting information (see page 11-3).

1. Turn the ignition switch ON (II).
2. Check IAT SENSOR 1 in the DATA LIST with the HDS.

   *Is about −40 °F (−40 °C) or less, or 4.90 V or more indicated?*

   **YES**—Go to step 3.

   **NO**—Intermittent failure, the system is OK at this time. Check for poor connections or loose terminals at IAT sensor 1 and the PCM. ■
3. Turn the ignition switch OFF.
4. Disconnect the MAF sensor/IAT sensor 1 5P connector.
5. Connect MAF sensor/IAT sensor 1 5P connector terminals No. 1 and No. 2 with a jumper wire.

**MAF SENSOR/IAT SENSOR 1 5P CONNECTOR**

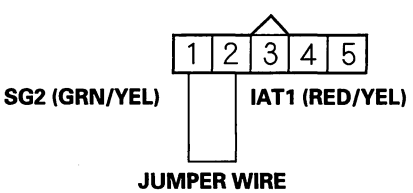


Wire side of female terminals

6. Turn the ignition switch ON (II).
7. Check IAT SENSOR 1 in the DATA LIST with the HDS.

   *Is about −40 °F (−40 °C) or less, or 4.90 V or more indicated?*

   **YES**—Go to step 8.

   **NO**—Go to step 20
8. Turn the ignition switch OFF.
9. Remove the jumper wire from the MAF sensor/IAT sensor 1 5P connector.
10. Turn the ignition switch ON (II).
11. Measure voltage between MAF sensor/IAT sensor 1 5P connector terminal No. 2 and body ground.

**MAF SENSOR/IAT SENSOR 1 5P CONNECTOR**

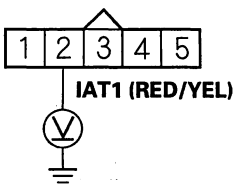


Wire side of female terminals

*Is there about 5 V?*

**YES**—Go to step 12.

**NO**—Go to step 16.

(cont'd)

Protected by AR



## DTC Troubleshooting (cont'd)

12. Turn the ignition switch OFF.
13. Jump the SCS line with the HDS.
14. Disconnect PCM connector C (44P).
15. Check for continuity between MAF sensor/IAT sensor 1 5P connector terminal No. 1 and PCM connector terminal B33.

**MAF SENSOR/IAT SENSOR 1 5P CONNECTOR**

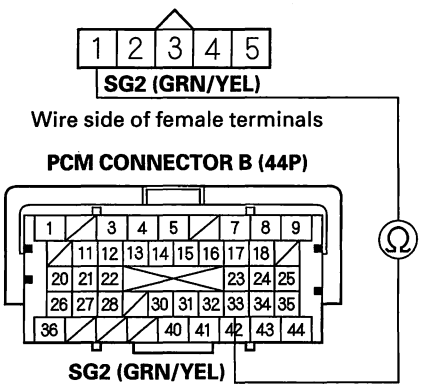


*Is there continuity?*

**YES**—Go to step 27.

**NO**—Repair open in the wire between the PCM (B33) and IAT sensor 1, then go to step 22.

16. Turn the ignition switch OFF.
17. Jump the SCS line with the HDS.
18. Disconnect PCM connector C (44P).
19. Check for continuity between MAF sensor/IAT sensor 1 5P connector terminal No. 2 and PCM connector terminal C28.

**MAF SENSOR/IAT SENSOR 1 5P CONNECTOR**

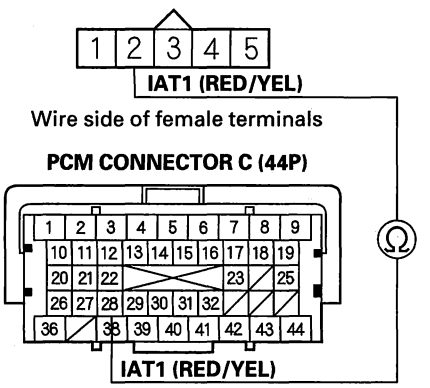


*Is there continuity?*

**YES**—Go to step 27.

**NO**—Repair open in the wire between the PCM (C28) and IAT sensor 1, then go to step 22.



BACK

Protected by AR

20. Turn the ignition switch OFF.

21. Replace the MAF sensor/IAT sensor 1 (see page 11-247).

22. Reconnect all connectors.

23. Turn the ignition switch ON (II).

24. Reset the PCM with the HDS.

25. Do the PCM idle learn procedure (see page 11-339).

26. Check for Temporary DTCs or DTCs with the HDS.

    *Is DTC P0113 indicated?*

    **YES**—Check for poor connections or loose terminals at the MAF sensor/IAT sensor 1 and the PCM, then go to step 1.

    **NO**—Troubleshooting is complete. If any other Temporary DTCs or DTCs are indicated, go to the indicated DTC's troubleshooting.■

27. Reconnect all connectors.

28. Update the PCM if it does not have the latest software (see page 11-7), or substitute a known-good PCM (see page 11-8).

29. Check for Temporary DTCs or DTCs with the HDS.

    *Is DTC P0113 indicated?*

    **YES**—Check for poor connections or loose terminals at the MAF sensor/IAT sensor 1 and the PCM. If the PCM was updated, substitute a known-good PCM (see page 11-8), then recheck. If the PCM was substituted, go to step 1.

    **NO**—If the PCM was updated, troubleshooting is complete. If the PCM was substituted, replace the original PCM (see page 11-252). If any other Temporary DTCs or DTCs are indicated, go to the indicated DTC's troubleshooting.■

Protected by AR



## DTC Troubleshooting (cont'd)

### DTC P0116: ECT Sensor 1 Circuit Range/ Performance Problem

NOTE: Before you troubleshoot, record all freeze data and any on-board snapshot, and review the general troubleshooting information (see page 11-3).

1. Turn the ignition switch ON (II).
2. Check ECT SENSOR 1 in the DATA LIST with the HDS.

   *Is about 176 °F (80 °C) or more, or 0.78 V or less indicated?*

   **YES**—Go to step 6.

   **NO**—Go to step 3.
3. Note the value of ECT SENSOR 1 in the DATA LIST with the HDS.
4. Start the engine. Hold the engine speed at 3,000 rpm without load (in Park or neutral) until the radiator fan comes on, then let it idle.
5. Check ECT SENSOR 1 in the DATA LIST with the HDS.

   *Does ECT SENSOR 1 change 18 °F (10 °C) or more?*

   **YES**—Intermittent failure, the system is OK at this time. Check for poor connections or loose terminals at ECT sensor 1 and the PCM. ■

   **NO**—Go to step 11.
6. Note the value of ECT SENSOR 1 in the DATA LIST with the HDS.
7. Turn the ignition switch OFF.
8. Open the hood, and let the engine cool for 3 hours.
9. Turn the ignition switch ON (II).
10. Check ECT SENSOR 1 in the DATA LIST with the HDS.

    *Does ECT SENSOR 1 change 18 °F (10 °C) or more?*

    **YES**—Intermittent failure, the system is OK at this time. Check for poor connections or loose terminals at ECT sensor 1 and the PCM. ■

    **NO**—Go to step 11.
11. Turn the ignition switch OFF.
12. Replace ECT sensor 1 (see page 11-249).
13. Turn the ignition switch ON (II).
14. Reset the PCM with the HDS.
15. Do the PCM idle learn procedure (see page 11-339).
16. Check for Temporary DTCs or DTCs with the HDS.

    *Is DTC P0116 indicated?*

    **YES**—Check for poor connections or loose terminals at ECT sensor 1 and the PCM, then go to step 1.

    **NO**—Troubleshooting is complete. If any other Temporary DTCs or DTCs are indicated, go to the indicated DTC's troubleshooting. ■



BACK

Protected by AR

## DTC P0117: ECT Sensor 1 Circuit Low Voltage

NOTE: Before you troubleshoot, record all freeze data and any on-board snapshot, and review the general troubleshooting information (see page 11-3).

1. Turn the ignition switch ON (II).
2. Check ECT SENSOR 1 in the DATA LIST with the HDS.

   *Is about 356 °F (180 °C) or more, or 0.08 V or less indicated?*

   **YES**—Go to step 3.

   **NO**—Intermittent failure, the system is OK at this time. Check for poor connections or loose terminals at ECT sensor 1 and the PCM.■
3. Turn the ignition switch OFF.
4. Disconnect the ECT sensor 1 2P connector.
5. Turn the ignition switch ON (II).
6. Check ECT SENSOR 1 in the DATA LIST with the HDS.

   *Is about 356 °F (180 °C) or more, or 0.08 V or less indicated?*

   **YES**—Go to step 7.

   **NO**—Go to step 11.
7. Turn the ignition switch OFF.
8. Jump the SCS line with the HDS.
9. Disconnect PCM connector B (44P).
10. Check for continuity between ECT sensor 1 2P connector terminal No. 1 and body ground.

**ECT SENSOR 1 2P CONNECTOR**

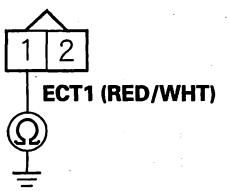


Wire side of female terminals

*Is there continuity?*

**YES**—Repair short in the wire between ECT sensor 1 and the PCM (B23), then go to step 13.

**NO**—Go to step 18.

11. Turn the ignition switch OFF.
12. Replace ECT sensor 1 (see page 11-249).
13. Reconnect all connectors.
14. Turn the ignition switch ON (II).
15. Reset the PCM with the HDS.
16. Do the PCM idle learn procedure (see page 11-339).
17. Check for Temporary DTCs or DTCs with the HDS.

    *Is DTC P0117 indicated?*

    **YES**—Check for poor connections or loose terminals at ECT sensor 1 and the PCM, then go to step 1.

    **NO**—Troubleshooting is complete. If any other Temporary DTCs or DTCs are indicated, go to the indicated DTC's troubleshooting.■

(cont'd)

Protected by AR



## DTC Troubleshooting (cont'd)

18. Reconnect all connectors.

19. Update the PCM if it does not have the latest software (see page 11-7), or substitute a known-good PCM (see page 11-8).

20. Check for Temporary DTCs or DTCs with the HDS.

    *Is DTC P0117 indicated?*

    **YES**—Check for poor connections or loose terminals at ECT sensor 1 and the PCM. If the PCM was updated, substitute a known-good PCM (see page 11-8), then recheck. If the PCM was substituted, go to step 1.

    **NO**—If the PCM was updated, troubleshooting is complete. If the PCM was substituted, replace the original PCM (see page 11-252). If any other Temporary DTCs or DTCs are indicated, go to the indicated DTC's troubleshooting.■



BACK

Protected by AR

## **DTC P0118:** ECT Sensor 1 Circuit High Voltage

NOTE: Before you troubleshoot, record all freeze data and any on-board snapshot, and review the general troubleshooting information (see page 11-3).

1. Turn the ignition switch ON (II).
2. Check ECT SENSOR 1 in the DATA LIST with the HDS.

   *Is about −40 °F (−40 °C) or less, or 4.90 V or more indicated?*

   **YES**—Go to step 3.

   **NO**—Intermittent failure, the system is OK at this time. Check for poor connections or loose terminals at ECT sensor 1 and the PCM. ■
3. Turn the ignition switch OFF.
4. Disconnect the ECT sensor 1 2P connector.
5. Connect ECT sensor 1 2P connector terminals No. 1 and No. 2 with a jumper wire.

**ECT SENSOR 1 2P CONNECTOR**

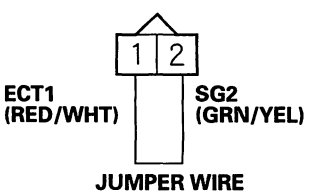


Wire side of female terminals

6. Turn the ignition switch ON (II).
7. Check ECT SENSOR 1 in the DATA LIST with the HDS.

   *Is about −40 °F (−40 °C) or less, or 4.90 V or more indicated?*

   **YES**—Go to step 8.

   **NO**—Go to step 20
8. Turn the ignition switch OFF.
9. Remove the jumper wire from the ECT sensor 1 2P connector.
10. Turn the ignition switch ON (II).
11. Measure voltage between ECT sensor 1 2P connector terminal No. 1 and body ground.

**ECT SENSOR 1 2P CONNECTOR**

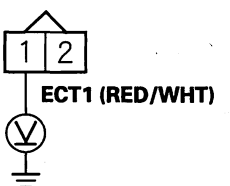


Wire side of female terminals

*Is there about 5 V?*

**YES**—Go to step 12.

**NO**—Go to step 16.

(cont'd)

Protected by AR



## DTC Troubleshooting (cont'd)

12. Turn the ignition switch OFF.
13. Jump the SCS line with the HDS.
14. Disconnect PCM connector B (44P).
15. Check for continuity between ECT sensor 1 2P connector terminal No. 2 and PCM connector terminal B33.

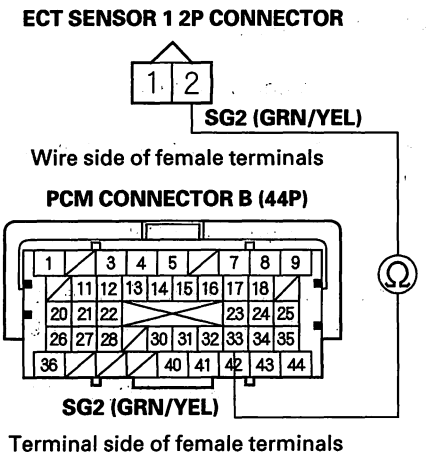


*Is there continuity?*

**YES**—Go to step 27.

**NO**—Repair open in the wire between the PCM (B33) and ECT sensor 1, then go to step 22.

16. Turn the ignition switch OFF.
17. Jump the SCS line with the HDS.
18. Disconnect PCM connector B (44P).
19. Check for continuity between ECT sensor 1 2P connector terminal No. 1 and PCM connector terminal B23.

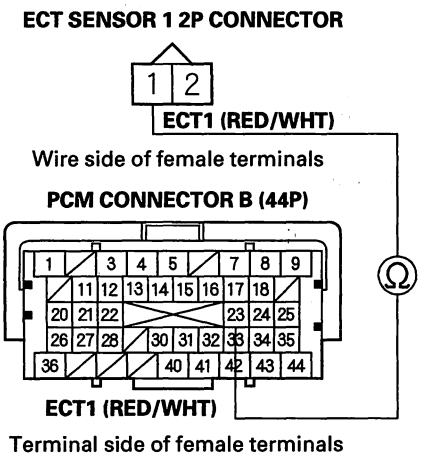


*Is there continuity?*

**YES**—Go to step 27.

**NO**—Repair open in the wire between the PCM (B23) and ECT sensor 1, then go to step 22.



BACK

Protected by AR

20. Turn the ignition switch OFF.

21. Replace ECT sensor 1 (see page 11-249).

22. Reconnect all connectors.

23. Turn the ignition switch ON (II).

24. Reset the PCM with the HDS.

25. Do the PCM idle learn procedure (see page 11-339).

26. Check for Temporary DTCs or DTCs with the HDS.

    *Is DTC P0118 indicated?*

    **YES**—Check for poor connections or loose terminals at ECT sensor 1 and the PCM, then go to step 1.

    **NO**—Troubleshooting is complete. If any other Temporary DTCs or DTCs are indicated, go to the indicated DTC's troubleshooting.■

27. Reconnect all connectors.

28. Update the PCM if it does not have the latest software (see page 11-7), or substitute a known-good PCM (see page 11-8).

29. Check for Temporary DTCs or DTCs with the HDS.

    *Is DTC P0118 indicated?*

    **YES**—Check for poor connections or loose terminals at ECT sensor 1 and the PCM. If the PCM was updated, substitute a known-good PCM (see page 11-8), then recheck. If the PCM was substituted, go to step 1.

    **NO**—If the PCM was updated, troubleshooting is complete. If the PCM was substituted, replace the original PCM (see page 11-252). If any other Temporary DTCs or DTCs are indicated, go to the indicated DTC's troubleshooting.■

Protected by AR



## DTC Troubleshooting (cont'd)

### DTC P0125: ECT Sensor 1 Malfunction/Slow Response

NOTE: Before you troubleshoot, record all freeze data and any on-board snapshot, and review the general troubleshooting information (see page 11-3).

1. Start the engine, and let it idle for 5 minutes or more.

2. Check ECT SENSOR 1 in the DATA LIST with the HDS.

   *Is about −1 °F (−18 °C) or less indicated?*

   **YES**—Go to step 9.

   **NO**—Go to step 3.

3. Allow the engine to cool to 104 °F (40 °C) or less.

4. Note the value of ECT SENSOR 1 and ECT SENSOR 2 in the DATA LIST with the HDS.

5. Start the engine, and let it idle.

6. Let the engine idle until ECT SENSOR 1 goes up 49 °F (27 °C) or more from the recorded temperature.

7. Note the value of ECT SENSOR 2 in the DATA LIST with the HDS.

8. Compare ECT SENSOR 2 and the recorded temperature.

   *Did ECT SENSOR 2 change 17 °F (9.5 °C) or more?*

   **YES**—Intermittent failure, the system is OK at this time. Check for poor connections or loose terminals at ECT sensor 1, ECT sensor 2, and the PCM. ■

   **NO**—Check the thermostat (see page 10-4). If the thermostat is OK, go to step 9. If the thermostat is faulty, replace the thermostat (see page 10-9), then go to step 11.

9. Turn the ignition switch OFF.

10. Replace ECT sensor 1 (see page 11-249).

11. Turn the ignition switch ON (II).

12. Reset the PCM with the HDS.

13. Do the PCM idle learn procedure (see page 11-339).

14. Allow the engine to cool to ambient temperature.

15. Start the engine, and let it idle for 20 minutes.

16. Check for Temporary DTCs or DTCs with the HDS.

    *Is DTC P0125 indicated?*

    **YES**—Check for poor connections or loose terminals at ECT sensor 1, ECT sensor 2, and the PCM, then go to step 1.

    **NO**—Go to step 17.

17. Monitor the OBD STATUS for DTC P0125 in the DTCs MENU with the HDS.

    *Does the screen indicate PASSED?*

    **YES**—Troubleshooting is complete. If any other Temporary DTCs or DTCs were indicated in step 16, go to the indicated DTC's troubleshooting. ■

    **NO**—If the screen indicates FAILED, check for poor connections or loose terminals at ECT sensor 1, ECT sensor 2, and the PCM, then go to step 1. If the screen indicates NOT COMPLETED, go to step 14.



BACK

Protected by AR

## **DTC P0128:** Cooling System Malfunction

NOTE: Before you troubleshoot, record all freeze data and any on-board snapshot, and review the general troubleshooting information (see page 11-3).

1. Turn the ignition switch ON (II).
2. Clear the DTC with the HDS.
3. Turn the blower switch OFF.
4. Check the FAN CTRL in the DATA LIST with the HDS.

   *Is it OFF?*

   **YES**—Go to step 5.

   **NO**—Wait until the FAN CTRL is off, then go to step 5.
5. Check the radiator fan operation.

   *Does the radiator fan keep running?*

   **YES**—Check the radiator fan circuit (see page 10-25), and the radiator fan relay (see page 22-64). If the circuits and the relay are OK, go to step 19.

   **NO**—Go to step 6.
6. Let the engine cool until the coolant temperature is 104 °F (40 °C) or less.
7. Note the value of ECT SENSOR 1 and ECT SENSOR 2 in the DATA LIST with the HDS.
8. Start the engine, and let it idle.
9. Let the engine idle until ECT SENSOR 1 goes up 41 °F (23 °C) or more from the recorded temperature.
10. Check ECT SENSOR 2 in the DATA LIST with the HDS.
11. Compare the recorded value of ECT SENSOR 2 and the present value of ECT SENSOR 2.

    *Did temperature rise 14 °F (8 °C) or more?*

    **YES**—Intermittent failure, the system is OK at this time. Check for poor connections or loose terminals at ECT sensor 1, ECT sensor 2, and the PCM. ■

    **NO**—Test the thermostat (see page 10-4), then go to step 12.
12. Turn the ignition switch ON (II).
13. Reset the PCM with the HDS.
14. Let the engine cool until the coolant temperature is between 21 °F (−6 °C) and 104 °F (40 °C).
15. Do the PCM idle learn procedure (see page 11-339).
16. Test-drive at a steady speed between 15—75 mph (24—120 km/h) for 10 minutes.
17. Check for Temporary DTCs or DTCs with the HDS.

    *Is DTC P0128 indicated?*

    **YES**—Check the cooling system, then go to step 1.

    **NO**—Go to step 18.
18. Monitor the OBD STATUS for DTC P0128 in the DTCs MENU with the HDS.

    *Does the screen indicate PASSED?*

    **YES**—Troubleshooting is complete. If any other Temporary DTCs or DTCs were indicated in step 17, go to the indicated DTC's troubleshooting. ■

    **NO**—If the screen indicates FAILED, check the cooling system, then go to step 1. If the screen indicates NOT COMPLETED, go to step 14.

(cont'd)

Protected by AR



## DTC Troubleshooting (cont'd)

19. Update the PCM if it does not have the latest software (see page 11-7), or substitute a known-good PCM (see page 11-8).

20. Let the engine cool until the coolant temperature is between 21 °F (−6 °C) and 104 °F (40 °C).

21. Start the engine. Hold the engine speed at 3,000 rpm without load (in Park or neutral) until the radiator fan comes on, then let it idle.

22. Test-drive at a steady speed between 15—75 mph (24—120 km/h) for 10 minutes.

23. Check for Temporary DTCs or DTCs with the HDS.

    *Is DTC P0128 indicated?*

    **YES**—Check for poor connections or loose terminals at ECT sensor 1, ECT sensor 2, and the PCM. If the PCM was updated, substitute a known-good PCM (see page 11-8), then go to step 20. If the PCM was substituted, go to step 1.

    **NO**—Go to step 24.

24. Monitor the OBD STATUS for DTC P0128 in the DTCs MENU with the HDS.

    *Does the screen indicate PASSED?*

    **YES**—If the PCM was updated, troubleshooting is complete. If the PCM was substituted, replace the original PCM (see page 11-252). If any other Temporary DTCs or DTCs were indicated in step 23, go to the indicated DTC's troubleshooting.■

    **NO**—If the screen indicates FAILED, check for poor connections or loose terminals at ECT sensor 1, ECT sensor 2, and the PCM. If the PCM was updated, substitute a known-good PCM (see page 11-8), then go to step 20. If the PCM was substituted, go to step 1. If the screen indicates NOT COMPLETED, go to step 20.



BACK

Protected by AR

## **DTC P0133:** A/F Sensor (Sensor 1) Malfunction/Slow Response

NOTE: Before you troubleshoot, record all freeze data and any on-board snapshot, and review the general troubleshooting information (see page 11-3).

1. Turn the ignition switch ON (II).

2. Clear the DTC with the HDS.

3. Start the engine. Hold the engine speed at 3,000 rpm without load (in Park or neutral) until the radiator fan comes on, then let it idle.

4. Test-drive under these conditions:

   - ECT SENSOR 1 above 158 °F (70 °C)
   - Transmission in D position
   - Drive the vehicle at 25 mph (40 km/h) or less for 5 minutes, then drive at a steady speed between 26—81 mph (41—130 km/h).

5. Monitor the OBD STATUS for DTC P0133 in the DTCs MENU with the HDS.

   *Does the screen indicate FAILED?*

   **YES**—Go to step 6.

   **NO**—If the screen indicates PASSED, intermittent failure, the system is OK at this time. Check for poor connections or loose terminals at the A/F sensor (Sensor 1) and the PCM. If the screen indicates EXECUTING, keep driving until a result comes on. If the screen indicates OUT OF CONDITION, go to step 3 and recheck.

6. Turn the ignition switch OFF.

7. Replace the A/F sensor (Sensor 1) (see page 11-245).

8. Turn the ignition switch ON (II).

9. Reset the PCM with the HDS.

10. Do the PCM idle learn procedure (see page 11-339).

11. Start the engine. Hold the engine speed at 3,000 rpm without load (in Park or neutral) until the radiator fan comes on, then let it idle.

12. Test-drive under these conditions:

    - ECT SENSOR 1 above 158 °F (70 °C)
    - Transmission in D position
    - Drive the vehicle at 25 mph (40 km/h) or less for 5 minutes, then drive at a steady speed between 26—81 mph (41—130 km/h).

13. Check for Temporary DTCs or DTCs with the HDS.

    *Is DTC P0133 indicated?*

    **YES**—Check for poor connections or loose terminals at the A/F sensor (Sensor 1) and the PCM, then go to step 1.

    **NO**—Go to step 14.

14. Monitor the OBD STATUS for DTC P0133 in the DTCs MENU with the HDS.

    *Does the screen indicate PASSED?*

    **YES**—Troubleshooting is complete. If any other Temporary DTCs or DTCs were indicated in step 13, go to the indicated DTC's troubleshooting. ■

    **NO**—If the screen indicates FAILED, check for poor connections or loose terminals at the A/F sensor (Sensor 1) and the PCM, then go to step 1. If the screen indicates EXECUTING, keep driving until a result comes on. If the screen indicates OUT OF CONDITION, go to step 11.

Protected by AR



## DTC Troubleshooting (cont'd)

### DTC P0134: A/F Sensor (Sensor 1) Heater System Malfunction

NOTE:
- Before you troubleshoot, record all freeze data and any on-board snapshot, and review the general troubleshooting information (see page 11-3).
- If the vehicle was out of fuel and the engine stalled before this DTC was stored, refuel and clear the DTC with the HDS.

1. Turn the ignition switch ON (II).
2. Clear the DTC with the HDS.
3. Start the engine, and let it idle without load (in Park or neutral) for at least 1 minute.
4. Check for Temporary DTCs or DTCs with the HDS.

   *Is DTC P0134 indicated?*

   **YES**—Go to step 5.

   **NO**—Intermittent failure, the system is OK at this time. Check for poor connections or loose terminals at the A/F sensor (Sensor 1), the PGM-FI subrelay, and the PCM. ■
5. Turn the ignition switch OFF.
6. Replace the A/F sensor (Sensor 1) (see page 11-245).
7. Turn the ignition switch ON (II).
8. Reset the PCM with the HDS.
9. Do the PCM idle learn procedure (see page 11-339).
10. Check for Temporary DTCs or DTCs with the HDS.

    *Is DTC P0134 indicated?*

    **YES**—Check for poor connections or loose terminals at the A/F sensor (Sensor 1), the PGM-FI subrelay, and the PCM, then go to step 1.

    **NO**—Go to step 11.
11. Monitor the OBD STATUS for DTC P0134 in the DTCs MENU with the HDS.

    *Does the screen indicate PASSED?*

    **YES**—Troubleshooting is complete. If any other Temporary DTCs or DTCs were indicated in step 10, go to the indicated DTC's troubleshooting. ■

    **NO**—If the screen indicates FAILED, check for poor connections or loose terminals at the A/F sensor (Sensor 1), the PGM-FI subrelay, and the PCM, then go to step 1. If the screen indicates NOT COMPLETED, keep idling until a result comes on.



BACK

Protected by AR

## DTC P0135: A/F Sensor (Sensor 1) Heater Circuit Malfunction

NOTE: Before you troubleshoot, record all freeze data and any on-board snapshot, and review the general troubleshooting information (see page 11-3).

1. Turn the ignition switch ON (II).
2. Clear the DTC with the HDS.
3. Start the engine. Hold the engine speed at 3,000 rpm without load (in Park or neutral) until the radiator fan comes on, then let it idle.
4. Check for Temporary DTCs or DTCs with the HDS.

   *Is DTC P0135 indicated?*

   **YES**—Go to step 5.

   **NO**—Intermittent failure, the system is OK at this time. Check for poor connections or loose terminals at the A/F sensor (Sensor 1), the PGM-FI subrelay, and the PCM. ■

5. Turn the ignition switch OFF.
6. Check the No. 11 LAF (15 A) fuse in the under-hood fuse/relay box.

   *Is the fuse OK?*

   **YES**—Go to step 7.

   **NO**—Go to step 20.

7. Test the PGM-FI subrelay (E) in the under-hood fuse/relay box (see page 22-64).

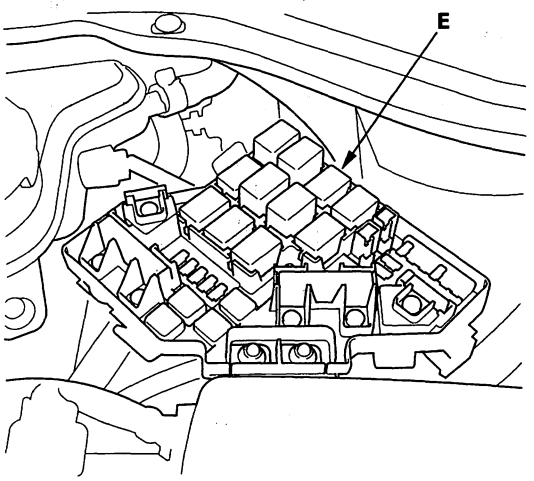


   *Is the PGM-FI subrelay OK?*

   **YES**—Go to step 8.

   **NO**—Replace the PGM-FI subrelay, then go to step 27.

8. Disconnect the A/F sensor (Sensor 1) 4P connector.
9. At the sensor side, measure resistance between A/F sensor (Sensor 1) 4P connector terminals No. 3 and No. 4.

**A/F SENSOR (SENSOR 1) 4P CONNECTOR**

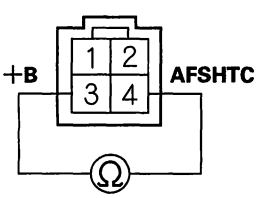


Terminal side of male terminals

*Is there 2.0–2.7 Ω at room temperature?*

**YES**—Go to step 10.

**NO**—Go to step 25.

(cont'd)

Protected by AR



## DTC Troubleshooting (cont'd)

10. At the sensor side, check for continuity between A/F sensor (Sensor 1) 4P connector terminals No. 2 and No. 3, and between terminals No. 2 and No. 4 individually.

**A/F SENSOR (SENSOR 1) 4P CONNECTOR**

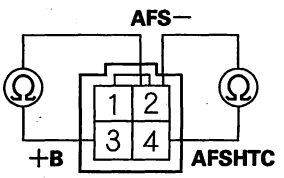


Terminal side of male terminals

*Is there continuity?*

**YES**—Go to step 25.

**NO**—Go to step 11.

11. Jump the SCS line with the HDS.

12. Disconnect PCM connector C (44P).

13. Connect A/F sensor (Sensor 1) 4P connector terminal No. 4 to body ground with a jumper wire.

**A/F SENSOR (SENSOR 1) 4P CONNECTOR**

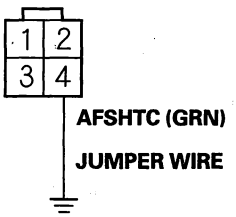


Wire side of female terminals

14. Check for continuity between PCM connector terminal C9 and body ground.

**PCM CONNECTOR C (44P)**

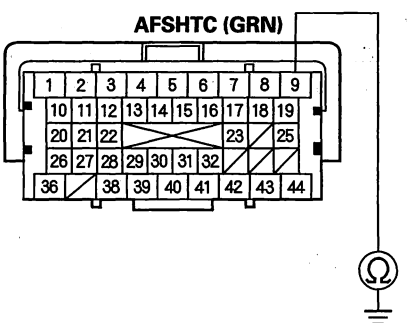


Terminal side of female terminals

*Is there continuity?*

**YES**—Go to step 15.

**NO**—Repair open in the wire between the PCM (C9) and the A/F sensor (Sensor 1), then go to step 26.



BACK

Protected by AR

15. Remove the PGM-FI subrelay (E) from the under-hood fuse/relay box.

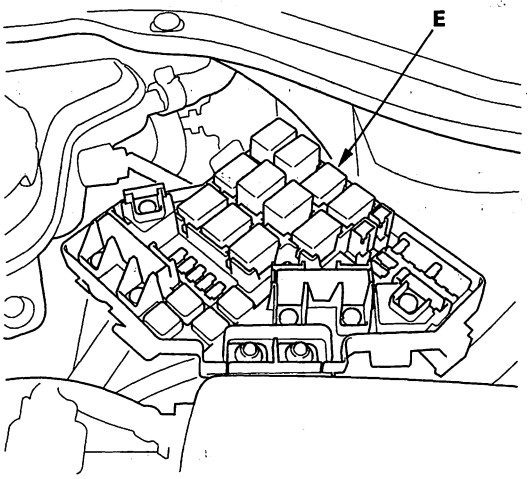


16. Connect A/F sensor (Sensor 1) 4P connector terminal No. 3 to body ground with a jumper wire.

**A/F SENSOR (SENSOR 1) 4P CONNECTOR**

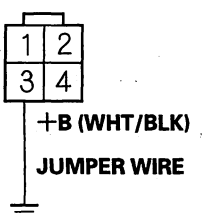


Wire side of female terminals

17. Check for continuity between PGM-FI subrelay 4P connector terminal No. 2 and body ground.

**PGM-FI SUBRELAY 4P CONNECTOR**

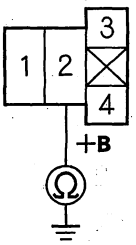


Terminal side of female terminals

*Is there continuity?*

**YES**—Go to step 18.

**NO**—Repair open in the wire between the A/F sensor (Sensor 1) and the PGM-FI subrelay, then go to step 26.

18. Disconnect PCM connector A (44P).

(cont'd)

Protected by AR



## DTC Troubleshooting (cont'd)

19. Check for continuity between PGM-FI subrelay 4P connector terminal No. 3 and PCM connector terminal A21.

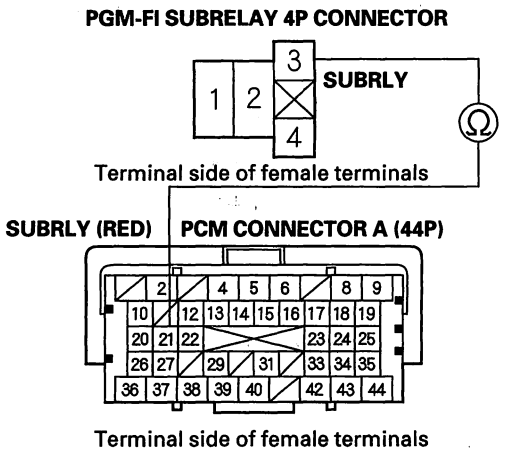


*Is there continuity?*

**YES**—Go to step 32.

**NO**—Repair open in the wire between the PCM (A21) and the PGM-FI subrelay, then go to step 26.

20. Remove the PGM-FI subrelay (E) from the under-hood fuse/relay box.

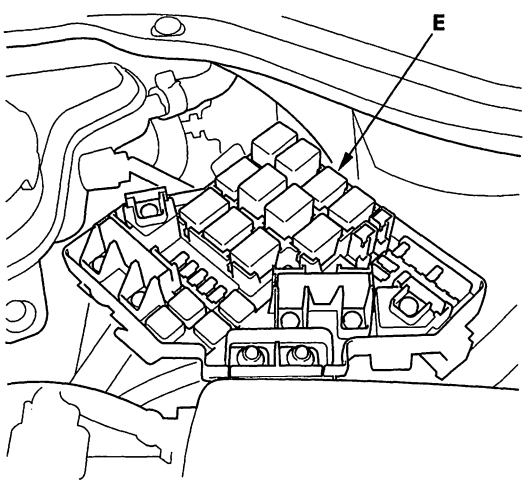


21. Disconnect the A/F sensor (Sensor 1) 4P connector.

22. Disconnect the EVAP canister purge valve 2P connector.

23. Disconnect the EVAP canister vent shut valve 2P connector.

24. Check for continuity between A/F sensor (Sensor 1) 4P connector terminal No. 3 and body ground.

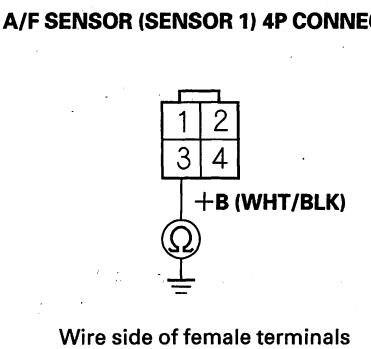


*Is there continuity?*

**YES**—Repair short in the wire between the PGM-FI subrelay, the EVAP canister purge valve, the EVAP canister vent shut valve, and the A/F sensor (Sensor 1). Also replace the No. 11 LAF (15 A) fuse, then go to step 26.

**NO**—Replace the under-hood fuse/relay box (see page 22-61), then go to step 26.



BACK

Protected by AR

25. Replace the A/F sensor (Sensor 1) (see page 11-245).

26. Reconnect all connectors.

27. Turn the ignition switch ON (II).

28. Reset the PCM with the HDS.

29. Do the PCM idle learn procedure (see page 11-339).

30. Check for Temporary DTCs or DTCs with the HDS.

    *Is DTC P0135 indicated?*

    **YES**—Check for poor connections or loose terminals at the A/F sensor (Sensor 1), the PGM-FI subrelay, and the PCM, then go to step 1.

    **NO**—Go to step 31.

31. Monitor the OBD STATUS for DTC P0135 in the DTCs MENU with the HDS.

    *Does the screen indicate PASSED?*

    **YES**—Troubleshooting is complete. If any other Temporary DTCs or DTCs were indicated in step 30, go to the indicated DTC's troubleshooting.■

    **NO**—If the screen indicates FAILED, check for poor connections or loose terminals at the A/F sensor (Sensor 1), the PGM-FI subrelay, and the PCM, then go to step 1. If the screen indicates NOT COMPLETED, keep idling until a result comes on.

32. Reconnect all connectors.

33. Update the PCM if it does not have the latest software (see page 11-7), or substitute a known-good PCM (see page 11-8).

34. Start the engine, and let it idle.

35. Check for Temporary DTCs or DTCs with the HDS.

    *Is DTC P0135 indicated?*

    **YES**—Check for poor connections or loose terminals at the A/F sensor (Sensor 1), the PGM-FI subrelay, and the PCM. If the PCM was updated, substitute a known-good PCM (see page 11-8), then go to step 34. If the PCM was substituted, go to step 1.

    **NO**—Go to step 36.

36. Monitor the OBD STATUS for DTC P0135 in the DTCs MENU with the HDS.

    *Does the screen indicate PASSED?*

    **YES**—If the PCM was updated, troubleshooting is complete. If the PCM was substituted, replace the original PCM (see page 11-252). If any other Temporary DTCs or DTCs were indicated in step 35, go to the indicated DTC's troubleshooting.■

    **NO**—If the screen indicates FAILED, check for poor connections or loose terminals at the A/F sensor (Sensor 1), the PGM-FI subrelay, and the PCM. If the PCM was updated, substitute a known-good PCM (see page 11-8), then go to step 34. If the PCM was substituted, go to step 1. If the screen indicates NOT COMPLETED, keep idling until a result comes on.

Protected by AR



## DTC Troubleshooting (cont'd)

### DTC P0137: Secondary HO2S (Sensor 2) Circuit Low Voltage

NOTE: Before you troubleshoot, record all freeze data and any on-board snapshot, and review the general troubleshooting information (see page 11-3).

1. Turn the ignition switch ON (II).
2. Clear the DTC with the HDS.
3. Start the engine. Hold the engine speed at 3,000 rpm without load (in Park or neutral) until the radiator fan comes on, then let it idle.
4. Check the HO2S S2 in the DATA LIST with the HDS.

   *Does the voltage stay at 0.29 V or less?*

   **YES**—Go to step 5.

   **NO**—Intermittent failure, the system is OK at this time. Check for poor connections or loose terminals at the secondary HO2S (Sensor 2) and the PCM. ■
5. Turn the ignition switch OFF.
6. Disconnect the secondary HO2S (Sensor 2) 4P connector.
7. Turn the ignition switch ON (II).
8. Check the HO2S S2 in the DATA LIST with the HDS.

   *Does the voltage stay at 0.29 V or less?*

   **YES**—Go to step 9.

   **NO**—Go to step 13.
9. Turn the ignition switch OFF.
10. Jump the SCS line with the HDS.
11. Disconnect PCM connector C (44P).
12. Check for continuity between secondary HO2S (Sensor 2) 4P connector terminal No. 1 and body ground.

**SECONDARY HO2S (SENSOR 2) 4P CONNECTOR**

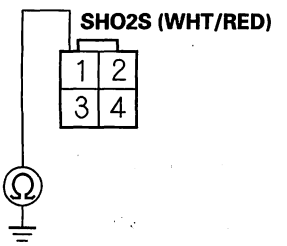


Wire side of female terminals

*Is there continuity?*

**YES**—Repair short in the wire between the PCM (C27) and the secondary HO2S (Sensor 2), then go to step 15.

**NO**—Go to step 23.

13. Turn the ignition switch OFF.
14. Replace the secondary HO2S (Sensor 2) (see page 11-245).
15. Reconnect all connectors.
16. Turn the ignition switch ON (II).
17. Reset the PCM with the HDS.
18. Do the PCM idle learn procedure (see page 11-339).
19. Start the engine, and let it idle without load (in Park or neutral) until the radiator fan comes on.



BACK

Protected by AR

20. Test-drive under these conditions:

    - ECT SENSOR 1 above 158 °F (70 °C)
    - Transmission in D position
    - Engine speed between 1,500—3,000 rpm
    - Maintain a steady speed about 1 minute or more

21. Check for Temporary DTCs or DTCs with the HDS.

    *Is DTC P0137 indicated?*

    **YES**—Check for poor connections or loose terminals at the secondary HO2S (Sensor 2) and the PCM, then go to step 1.

    **NO**—Go to step 22.

22. Monitor the OBD STATUS for DTC P0137 in the DTCs MENU with the HDS.

    *Does the screen indicate PASSED?*

    **YES**—Troubleshooting is complete. If any other Temporary DTCs or DTCs were indicated in step 21, go to the indicated DTC's troubleshooting. ■

    **NO**—If the screen indicates FAILED, check for poor connections or loose terminals at the secondary HO2S (Sensor 2) and the PCM, then go to step 1. If the screen indicates EXECUTING, keep driving until a result comes on. If the screen indicates OUT OF CONDITION, go to step 19.

23. Reconnect all connectors.

24. Update the PCM if it does not have the latest software (see page 11-7), or substitute a known-good PCM (see page 11-8).

25. Start the engine, and let it idle without load (in Park or neutral) until the radiator fan comes on.

26. Test-drive under these conditions:

    - ECT SENSOR 1 above 158 °F (70 °C)
    - Transmission in D position
    - Engine speed between 1,500—3,000 rpm
    - Maintain a steady speed about 1 minute or more

27. Check for Temporary DTCs or DTCs with the HDS.

    *Is DTC P0137 indicated?*

    **YES**—Check for poor connections or loose terminals at the secondary HO2S (Sensor 2) and the PCM. If the PCM was updated, substitute a known-good PCM (see page 11-8), then go to step 25. If the PCM was substituted, go to step 1.

    **NO**—Go to step 28.

28. Monitor the OBD STATUS for DTC P0137 in the DTCs MENU with the HDS.

    *Does the screen indicate PASSED?*

    **YES**—If the PCM was updated, troubleshooting is complete. If the PCM was substituted, replace the original PCM (see page 11-252). If any other Temporary DTCs or DTCs were indicated in step 27, go to the indicated DTC's troubleshooting. ■

    **NO**—If the screen indicates FAILED, check for poor connections or loose terminals at the secondary HO2S (Sensor 2) and the PCM. If the PCM was updated, substitute a known-good PCM (see page 11-8), then go to step 25. If the PCM was substituted, go to step 1. If the screen indicates EXECUTING, keep driving until a result comes on. If the screen indicates OUT OF CONDITION, go to step 25.

Protected by AR



## DTC Troubleshooting (cont'd)

### DTC P0138: Secondary HO2S (Sensor 2) Circuit High Voltage

NOTE: Before you troubleshoot, record all freeze data and any on-board snapshot, and review the general troubleshooting information (see page 11-3).

1. Turn the ignition switch ON (II).
2. Clear the DTC with the HDS.
3. Start the engine. Hold the engine speed at 3,000 rpm without load (in Park or neutral) until the radiator fan comes on, then let it idle.
4. Check the HO2S S2 in the DATA LIST with the HDS.

   *Does the voltage stay at 1.25 V or more?*

   **YES**—Go to step 5.

   **NO**—Intermittent failure, the system is OK at this time. Check for poor connections or loose terminals at the secondary HO2S (Sensor 2) and the PCM.■
5. Turn the ignition switch OFF.
6. Disconnect the secondary HO2S (Sensor 2) 4P connector.
7. Connect secondary HO2S (Sensor 2) 4P connector terminals No. 1 and No. 2 with a jumper wire.

**SECONDARY HO2S (SENSOR 2) 4P CONNECTOR**

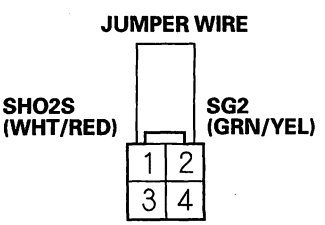


Wire side of female terminals

8. Turn the ignition switch ON (II).
9. Check the HO2S S2 in the DATA LIST with the HDS.

   *Does the voltage stay at 1.25 V or more?*

   **YES**—Go to step 10.

   **NO**—Go to step 19.
10. Turn the ignition switch OFF.
11. Remove the jumper wire from the secondary HO2S (Sensor 2) 4P connector.
12. Connect secondary HO2S (Sensor 2) 4P connector terminal No. 1 to body ground with a jumper wire.

**SECONDARY HO2S (SENSOR 2) 4P CONNECTOR**

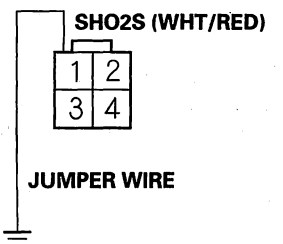


Wire side of female terminals

13. Turn the ignition switch ON (II).
14. Check the HO2S S2 in the DATA LIST with the HDS.

    *Does the voltage stay at 1.25 V or more?*

    **YES**—Go to step 15.

    **NO**—Repair open in the wire between the PCM (B33) and the secondary HO2S (Sensor 2), then go to step 21.



BACK

Protected by AR

15. Turn the ignition switch OFF.

16. Jump the SCS line with the HDS.

17. Disconnect PCM connector C (44P).

18. Check for continuity between PCM connector terminal C27 and body ground.

**PCM CONNECTOR C (44P)**

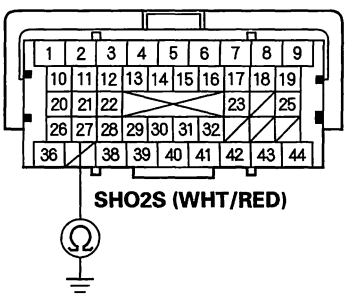


Terminal side of female terminals

*Is there continuity?*

**YES**—Go to step 29.

**NO**—Repair open in the wire between the PCM (C27) and the secondary HO2S (Sensor 2), then go to step 21.

19. Turn the ignition switch OFF.

20. Replace the secondary HO2S (Sensor 2) (see page 11-245).

21. Reconnect all connectors.

22. Turn the ignition switch ON (II).

23. Reset the PCM with the HDS.

24. Do the PCM idle learn procedure (see page 11-339).

25. Start the engine, and let it idle without load (in Park or neutral) until the radiator fan comes on.

26. Test-drive under these conditions:

- ECT SENSOR 1 above 158 °F (70 °C)
- Transmission in D position
- Engine speed between 1,500—3,000 rpm
- Maintain a steady speed about 1 minute or more

27. Check for Temporary DTCs or DTCs with the HDS.

*Is DTC P0138 indicated?*

**YES**—Check for poor connections or loose terminals at the secondary HO2S (Sensor 2) and the PCM, then go to step 1.

**NO**—Go to step 28.

28. Monitor the OBD STATUS for DTC P0138 in the DTCs MENU with the HDS.

*Does the screen indicate PASSED?*

**YES**—Troubleshooting is complete. If any other Temporary DTCs or DTCs were indicated in step 27, go to the indicated DTC's troubleshooting. ■

**NO**—If the screen indicates FAILED, check for poor connections or loose terminals at the secondary HO2S (Sensor 2) and the PCM, then go to step 1. If the screen indicates EXECUTING, keep driving until a result comes on. If the screen indicates OUT OF CONDITION, go to step 25.

(cont'd)

Protected by AR



## DTC Troubleshooting (cont'd)

29. Reconnect all connectors.

30. Update the PCM if it does not have the latest software (see page 11-7), or substitute a known-good PCM (see page 11-8).

31. Start the engine, and let it idle without load (in Park or neutral) until the radiator fan comes on, then let it idle.

32. Test-drive under these conditions:

    - ECT SENSOR 1 above 158 °F (70 °C)
    - Transmission in D position
    - Engine speed between 1,500—3,000 rpm
    - Maintain a steady speed about 1 minute or more

33. Check for Temporary DTCs or DTCs with the HDS.

    *Is DTC P0138 indicated?*

    **YES**—Check for poor connections or loose terminals at the secondary HO2S (Sensor 2) and the PCM. If the PCM was updated, substitute a known-good PCM (see page 11-8), then go to step 31. If the PCM was substituted, go to step 1.

    **NO**—Go to step 34.

34. Monitor the OBD STATUS for DTC P0138 in the DTCs MENU with the HDS.

    *Does the screen indicate PASSED?*

    **YES**—If the PCM was updated, troubleshooting is complete. If the PCM was substituted, replace the original PCM (see page 11-252). If any other Temporary DTCs or DTCs were indicated in step 33, go to the indicated DTC's troubleshooting. ■

    **NO**—If the screen indicates FAILED, check for poor connections or loose terminals at the secondary HO2S (Sensor 2) and the PCM. If the PCM was updated, substitute a known-good PCM (see page 11-8), then go to step 31. If the PCM was substituted, go to step 1. If the screen indicates EXECUTING, keep driving until a result comes on. If the screen indicates OUT OF CONDITION, go to step 31.



BACK

Protected by AR

## **DTC P0139:** Secondary HO2S (Sensor 2) Slow Response

NOTE: Before you troubleshoot, record all freeze data and any on-board snapshot, and review the general troubleshooting information (see page 11-3).

1. Turn the ignition switch ON (II).

2. Clear the DTC with the HDS.

3. Start the engine. Hold the engine speed at 3,000 rpm without load (in Park or neutral) until the radiator fan comes on, then let it idle.

4. Test-drive under these conditions:

   - ECT SENSOR 1 above 158 °F (70 °C)
   - Transmission in D position
   - Vehicle speed at 35 mph (56 km/h) or more
   - Drive 20 seconds or more

5. Monitor the OBD STATUS for DTC P0139 in the DTCs MENU with the HDS.

   *Does the screen indicate FAILED?*

   **YES**—Go to step 6.

   **NO**—If the screen indicates PASSED, intermittent failure, the system is OK at this time. Check for poor connections or loose terminals at the secondary HO2S (Sensor 2) and the PCM. If the screen indicates EXECUTING, keep driving until a result comes on. If the screen indicates OUT OF CONDITION, go to step 3 and recheck.

6. Turn the ignition switch OFF.

7. Replace the secondary HO2S (Sensor 2) (see page 11-245).

8. Turn the ignition switch ON (II).

9. Reset the PCM with the HDS.

10. Do the PCM idle learn procedure (see page 11-339).

11. Start the engine. Hold the engine speed at 3,000 rpm without load (in Park or neutral) until the radiator fan comes on, then let it idle.

12. Test-drive under these conditions:

    - ECT SENSOR 1 above 158 °F (70 °C)
    - Transmission in D position
    - Vehicle speed at 35 mph (56 km/h) or more
    - Drive 20 seconds or more

13. Check for Temporary DTCs or DTCs with the HDS.

    *Is DTC P0139 indicated?*

    **YES**—Check for poor connections or loose terminals at the secondary HO2S (Sensor 2) and the PCM, then go to step 1.

    **NO**—Go to step 14.

14. Monitor the OBD STATUS for DTC P0139 in the DTCs MENU with the HDS.

    *Does the screen indicate PASSED?*

    **YES**—Troubleshooting is complete. If any other Temporary DTCs or DTCs were indicated in step 13, go to the indicated DTC's troubleshooting. ■

    **NO**—If the screen indicates FAILED, check for poor connections or loose terminals at the secondary HO2S (Sensor 2) and the PCM, then go to step 1. If the screen indicates EXECUTING, keep driving until a result comes on. If the screen indicates OUT OF CONDITION, go to step 11.

Protected by AR



## DTC Troubleshooting (cont'd)

### DTC P0141: Secondary HO2S (Sensor 2) Heater Circuit Malfunction

NOTE: Before you troubleshoot, record all freeze data and any on-board snapshot, and review the general troubleshooting information (see page 11-3).

1. Turn the ignition switch ON (II).
2. Clear the DTC with the HDS.
3. Start the engine.
4. Check for Temporary DTCs or DTCs with the HDS.

   *Is DTC P0141 indicated?*

   **YES**—Go to step 5.

   **NO**—Intermittent failure, the system is OK at this time. Check for poor connections or loose terminals at the secondary HO2S (Sensor 2) and the PCM.■

5. Turn the ignition switch OFF.
6. Check the No. 3 IG1 ACG (15 A) fuse in the under-dash fuse/relay box.

   *Is the fuse OK?*

   **YES**—Go to step 7.

   **NO**—Repair short in the wire between the secondary HO2S (Sensor 2) and the No. 3 IG1 ACG (15 A) fuse. Also replace the No. 3 IG1 ACG (15 A) fuse, then go to step 23.

7. Disconnect the secondary HO2S (Sensor 2) 4P connector.
8. At the secondary HO2S (Sensor 2) side, measure resistance between secondary HO2S (Sensor 2) 4P connector terminals No. 3 and No. 4.

**SECONDARY HO2S (SENSOR 2) 4P CONNECTOR**

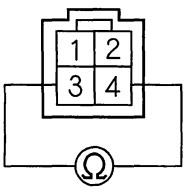


Terminal side of male terminals

*Is there 5.4—7.3 Ω at room temperature?*

**YES**—Go to step 9.

**NO**—Go to step 22.

9. At the secondary HO2S (Sensor 2) side, check for continuity between body ground and secondary HO2S (Sensor 2) 4P connector terminals No. 3 and No. 4 individually.

**SECONDARY HO2S (SENSOR 2) 4P CONNECTOR**

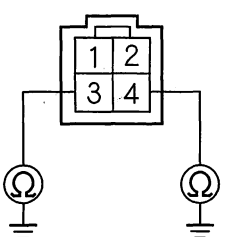


Terminal side of male terminals

*Is there continuity?*

**YES**—Go to step 22.

**NO**—Go to step 10.



BACK

Protected by AR

10. Turn the ignition switch ON (II).

11. Measure voltage between secondary HO2S (Sensor 2) 4P connector terminals No. 3 and No. 4.

**SECONDARY HO2S (SENSOR 2) 4P CONNECTOR**

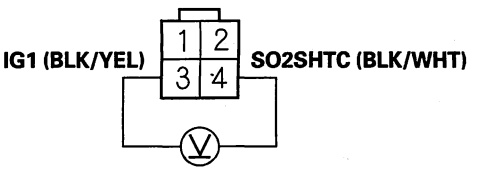


Wire side of female terminals

*Is there battery voltage?*

**YES**—Go to step 12.

**NO**—Go to step 16.

12. Turn the ignition switch OFF.

13. Jump the SCS line with the HDS.

14. Disconnect PCM connector B (44P).

15. Check for continuity between PCM connector terminal B4 and body ground.

**PCM CONNECTOR B (44P)**

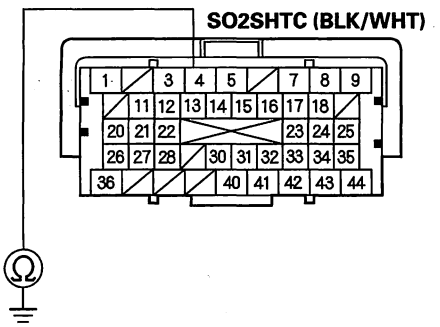


Terminal side of female terminals

*Is there continuity?*

**YES**—Repair short in the wire between the PCM (B4) and the secondary HO2S (Sensor 2), then go to step 23.

**NO**—Go to step 29.

16. Measure voltage between secondary HO2S (Sensor 2) 4P connector terminal No. 3 and body ground.

**SECONDARY HO2S (SENSOR 2) 4P CONNECTOR**

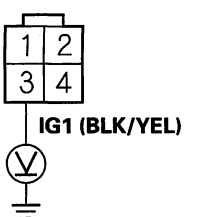


Wire side of female terminals

*Is there battery voltage?*

**YES**—Go to step 17.

**NO**—Repair open in the wire between the secondary HO2S (Sensor 2) and the No. 3 IG1 ACG (15 A) fuse, then go to step 23.

(cont'd)

Protected by AR



## DTC Troubleshooting (cont'd)

17. Turn the ignition switch OFF.

18. Jump the SCS line with the HDS.

19. Disconnect PCM connector B (44P).

20. Connect secondary HO2S (Sensor 2) 4P connector terminal No. 4 to body ground with a jumper wire.

**SECONDARY HO2S (SENSOR 2) 4P CONNECTOR**

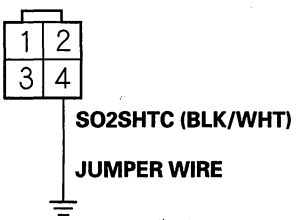


Wire side of female terminals

21. Check for continuity between PCM connector terminal B4 and body ground.

**PCM CONNECTOR B (44P)**

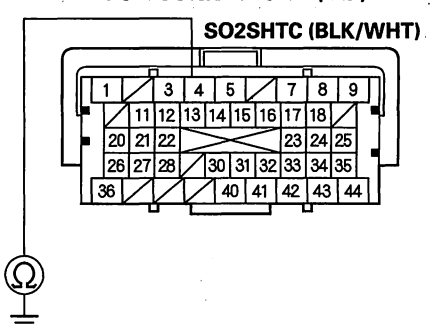


Terminal side of female terminals

*Is there continuity?*

**YES**—Go to step 29.

**NO**—Repair open in the wire between the PCM (B4) and the secondary HO2S (Sensor 2), then go to step 23.

22. Replace the secondary HO2S (Sensor 2) (see page 11-245).

23. Reconnect all connectors.

24. Turn the ignition switch ON (II).

25. Reset the PCM with the HDS.

26. Do the PCM idle learn procedure (see page 11-339).

27. Check for Temporary DTCs or DTCs with the HDS.

*Is DTC P0141 indicated?*

**YES**—Check for poor connections or loose terminals at the secondary HO2S (Sensor 2) and the PCM, then go to step 1.

**NO**—Go to step 28.

28. Monitor the OBD STATUS for DTC P0141 in the DTCs MENU with the HDS.

*Does the screen indicate PASSED?*

**YES**—Troubleshooting is complete. If any other Temporary DTCs or DTCs were indicated in step 27, go to the indicated DTC's troubleshooting. ■

**NO**—If the screen indicates FAILED, check for poor connections or loose terminals at the secondary HO2S (Sensor 2) and the PCM, then go to step 1. If the screen indicates NOT COMPLETED, keep idling until a result comes on.



BACK

Protected by AR

29. Reconnect all connectors.

30. Update the PCM if it does not have the latest software (see page 11-7), or substitute a known-good PCM (see page 11-8).

31. Start the engine, and let it idle.

32. Check for Temporary DTCs or DTCs with the HDS.

    *Is DTC P0141 indicated?*

    **YES**—Check for poor connections or loose terminals at the secondary HO2S (Sensor 2) and the PCM. If the PCM was updated, substitute a known-good PCM (see page 11-8), then go to step 31. If the PCM was substituted, go to step 1.

    **NO**—Go to step 33.

33. Monitor the OBD STATUS for DTC P0141 in the DTCs MENU with the HDS.

    *Does the screen indicate PASSED?*

    **YES**—If the PCM was updated, troubleshooting is complete. If the PCM was substituted, replace the original PCM (see page 11-252). If any other Temporary DTCs or DTCs were indicated in step 32, go to the indicated DTC's troubleshooting. ■

    **NO**—If the screen indicates FAILED, check for poor connections or loose terminals at the secondary HO2S (Sensor 2) and the PCM. If the PCM was updated, substitute a known-good PCM (see page 11-8), then go to step 31. If the PCM was substituted, go to step 1. If the screen indicates NOT COMPLETED, keep idling until a result comes on.

Protected by AR



## DTC Troubleshooting (cont'd)

### DTC P0171: Fuel System Too Lean

### DTC P0172: Fuel System Too Rich

NOTE:
- Before you troubleshoot, record all freeze data and any on-board snapshot, and review the general troubleshooting information (see page 11-3).
- If any of the DTCs listed below are indicated at the same time as DTC P0171 and/or P0172, troubleshoot those DTCs first, then recheck for P0171 and/or P0172.
  P0101, P0102, P0103: Mass air flow (MAF) sensor
  P0133, P1172, P2A00: Air fuel ratio (A/F) sensor (Sensor 1)
  P0139: Secondary HO2S (Sensor 2)
  P0141: Secondary HO2S (Sensor 2) heater
  P2646, P2647, P2648, P2649: VTEC system

1. Check the fuel pressure (see page 11-365).

   *Is the fuel pressure OK?*

   **YES**—Go to step 2.

   **NO**—Repair the cause, then go to step 7.

2. Check for vacuum or air leaks at these parts:

   - PCV valve
   - PCV hose
   - EVAP canister purge valve
   - Throttle body
   - Intake air duct (air flow tube)
   - Intake manifold
   - Turbocharger
   - Intake air duct (turbocharger inlet tube and pipe)
   - Intake air duct (turbocharger outlet pipe)
   - Charge air cooler
   - Intake air duct (charge air cooler inlet hose)
   - Intake air duct (charge air cooler outlet tube)
   - Turbocharger bypass control solenoid valve
   - Brake booster
   - Brake booster hose

   *Are the parts OK?*

   **YES**—Go to step 3.

   **NO**—Repair or replace parts with leaks, then go to step 7.

3. Start the engine. Hold the engine speed at 3,000 rpm without load (in Park or neutral) until the radiator fan comes on, then let it idle.

4. Check for these conditions:

   - ECT SENSOR 1 above 158 °F (70 °C)
   - Transmission in Park or neutral
   - All electrical loads off

5. Monitor the ENGINE SPEED in the DATA LIST with the HDS, and hold the engine speed at 2,500 rpm. Once the engine speed is met, hold the accelerator pedal steady for more than 10 seconds.

   *Did the engine speed vary more than 100 rpm from 2,500 rpm?*

   **YES**—Repeat step 5.

   **NO**—Go to step 6.

6. While holding the engine speed at 2,500 rpm, check the MAF SENSOR in the DATA LIST with the HDS.

   *Is there about 7.8– 11.2 gm/s?*

   **YES**—Check the engine valve clearances and adjust if necessary (see page 6-9). If the valve clearances are OK, replace the injectors (see page 11-243), then go to step 7.

   **NO**—Replace the MAF sensor/IAT sensor 1 (see page 11-247), then go to step 7.



BACK

Protected by AR

7. Turn the ignition switch ON (II).

8. Reset the PCM with the HDS.

9. Do the PCM idle learn procedure (see page 11-339).

10. Start the engine. Hold the engine speed at 3,000 rpm without load (in Park or neutral) until the radiator fan comes on, then let it idle.

11. Test-drive under these conditions:

    - ECT SENSOR 1 above 158 °F (70 °C)
    - Transmission in D position
    - Drive at a steady speed between 15—75 mph (20—120 km/h)

    NOTE: DTC P0171 and/or P0172 may take up to 80 minutes of test driving to set. Using the HDS, monitor the air fuel feed back average (AF FB AVE). If the air fuel feed back average stays within 0.80—1.25, there is no problem at this time.

12. Check for Temporary DTCs or DTCs with the HDS.

    *Is DTC P0171 or P0172 indicated?*

    **YES**—Go to step 1.

    **NO**—Troubleshooting is complete. If any other Temporary DTCs or DTCs are indicated, go to the indicated DTC's troubleshooting.■

Protected by AR



## DTC Troubleshooting (cont'd)

**DTC P0300:** Random Misfire and Any Combination of the Following:

**DTC P0301:** No. 1 Cylinder Misfire Detected

**DTC P0302:** No. 2 Cylinder Misfire Detected

**DTC P0303:** No. 3 Cylinder Misfire Detected

**DTC P0304:** No. 4 Cylinder Misfire Detected

**Special Tools Required**
- Pressure gauge adapter 07NAJ-P07010A
- A/T low pressure gauge w/panel 07406-0070301
- A/T pressure hose 07406-0020201
- A/T pressure hose, 2,210 mm 07MAJ-PY4011A
- A/T pressure adapter 07MAJ-PY40120
- Oil pressure hose 07ZAJ-S5AA200

NOTE:
- Before you troubleshoot, record all freeze data and any on-board snapshot, and review the general troubleshooting information (see page 11-3).
- If the misfire is frequent enough to trigger detection of increased emissions during two consecutive driving cycles, the MIL will come on, and DTC P0300 (and some of the combination of P0301 through P0304) will be stored.
- If the misfire is frequent enough to damage the catalyst, the MIL will flash whenever the misfire occurs, and DTC P0300 (and some of the combination of P0301 through P0304) will be stored. When the misfire stops, the MIL will remain on.
- If any of the DTCs listed below are indicated at the same time as the random misfire DTCs, troubleshoot those DTCs first, then recheck for random misfire DTCs (Because parts can sometimes fail without setting DTCs, you should also do a physical inspection of the systems listed below.):

  P0101, P0102, P0103: Mass air flow (MAF) sensor
  P0171, P0172: Fuel system
  P0365, P0369: Camshaft position (CMP) sensor B
  P0506, P0507: Idle control system
  P2646, P2647, P2648, P2649: VTEC system

1. Turn the ignition switch ON (II).

2. Clear the DTC with the HDS.

3. Start the engine, and let it idle without load (in Park or neutral).

4. Monitor the OBD STATUS for DTC P0301, P0302, P0303, or P0304 in the DTCs MENU with the HDS.

   *Does the screen indicate FAILED?*

   **YES**—Go to step 9.

   **NO**—If the screen indicates PASSED, go to step 5. If the screen indicates EXECUTING, keep driving until a result comes on. If the screen indicates OUT OF CONDITION, wait for several minutes, then recheck.

5. Check the CYL1 MISFIRE, CYL2 MISFIRE, CYL3 MISFIRE, and/or CYL4 MISFIRE in the DATA LIST for 10 minutes with the HDS.

   *Does the CYL1 MISFIRE, CYL2 MISFIRE, CYL3 MISFIRE, and/or CYL4 MISFIRE show misfire counts?*

   **YES**—Go to step 9.

   **NO**—Go to step 6.

6. Test-drive the vehicle for several minutes in the range of these recorded freeze data parameters:

   - ENGINE SPEED
   - VSS
   - REL TP SENSOR
   - CLV (calculated load value)
   - APP SENSOR

7. Monitor the OBD STATUS for DTC P0301, P0302, P0303, or P0304 in the DTCs MENU with the HDS.

   *Does the screen indicate FAILED?*

   **YES**—Go to step 9.

   **NO**—If the screen indicates PASSED, go to step 8. If the screen indicates EXECUTING, keep driving until a result comes on. if the screen indicates OUT OF CONDITION, go to step 6 and recheck.



BACK

Protected by AR

8. Check the CYL1 MISFIRE, CYL2 MISFIRE, CYL3 MISFIRE, and/or CYL4 MISFIRE in the DATA LIST for 10 minutes with the HDS.

   *Does the CYL1 MISFIRE, CYL2 MISFIRE, CYL3 MISFIRE, and/or CYL4 MISFIRE show misfire counts?*

   **YES**—Go to step 9.

   **NO**—Intermittent failure, the system is OK at this time.■

9. Turn the ignition switch OFF.

10. Check the fuel quality.

    *Is the quality good?*

    **YES**—Go to step 11.

    **NO**—Drain the tank and fill with a known-good fuel, then go to step 24.

11. Inspect the spark plugs (see page 4-22). If the spark plugs are fouled or worn, replace them.

12. Test-drive the vehicle for several minutes in the range of these recorded freeze data parameters:

    - ENGINE SPEED
    - VSS
    - REL TP SENSOR
    - CLV (calculated load value)
    - APP SENSOR

13. Check the CYL1 MISFIRE, CYL2 MISFIRE, CYL3 MISFIRE, and/or CYL4 MISFIRE in the DATA LIST for 10 minutes with the HDS.

    *Does the CYL1 MISFIRE, CYL2 MISFIRE, CYL3 MISFIRE, and/or CYL4 MISFIRE show misfire counts?*

    **YES**—Go to step 14.

    **NO**—Go to step 24.

14. Check the fuel pressure (see page 11-365).

    *Is the fuel pressure OK?*

    **YES**—Go to step 15.

    **NO**—Repair the faulty part(s), then go to step 24.

15. Start the engine. Hold the engine speed at 3,000 rpm without load (in Park or neutral) until the radiator fan comes on, then let it idle.

16. Check for these conditions:

    - ECT SENSOR 1 above 176 ℉ (80 ℃)
    - Transmission in Park or neutral
    - All electrical loads off

17. Monitor the ENGINE SPEED in the DATA LIST with the HDS, and hold the engine speed at 2,500 rpm . Once the engine speed is met, hold the accelerator pedal steady for more than 10 seconds.

    *Did the engine speed vary more than 100 rpm from 2,500 rpm?*

    **YES**—Repeat step 17.

    **NO**—Go to step 18.

18. While holding the engine speed at 2,500 rpm, check the MAF SENSOR in the DATA LIST with the HDS.

    *Is there about 7.8— 11.2 gm/s?*

    **YES**—Go to step 19.

    **NO**—Replace the MAF sensor/IAT sensor 1 (see page 11-247), then go to step 24.

(cont'd)

Protected by AR



## DTC Troubleshooting (cont'd)

19. Turn the ignition switch OFF.

20. Remove the rocker arm oil pressure switch (A), and install the special tools as shown, then install the rocker arm oil pressure switch on the pressure gauge attachment (B).

    NOTE: Install the rocker arm oil pressure switch in the reverse order of removal with a new O-ring.

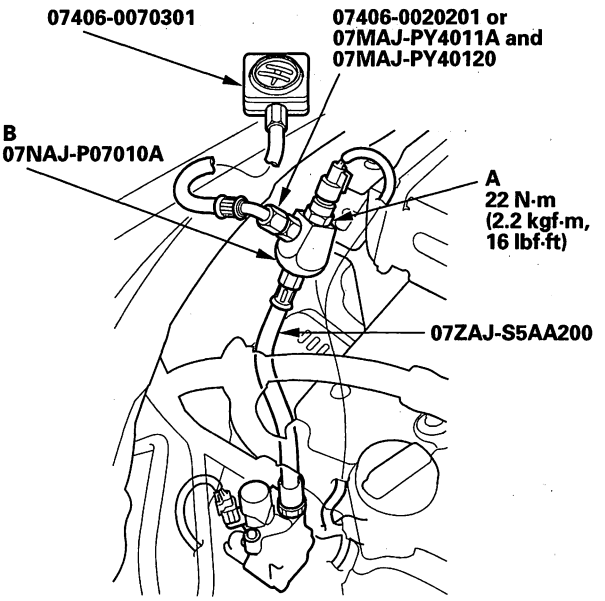


21. Reconnect the rocker arm oil pressure switch 2P connector.

22. Start the engine. Hold the engine speed at 3,000 rpm without load (in Park or neutral) until the radiator fan comes on, then let it idle.

23. Check the oil pressure at engine speeds of 1,000 rpm and 2,000 rpm.

    *Is the oil pressure below 49 kPa (0.5 kgf/cm², 7 psi)?*

    **YES**—Check for air in the fuel line, then go to step 24.

    **NO**—Inspect the VTEC system, then go to step 24.

24. Turn the ignition switch ON (II).

25. Reset the PCM with the HDS.

26. Clear the CKP pattern with the HDS.

27. Do the PCM idle learn procedure (see page 11-339).

28. Do the CKP pattern learn procedure (see page 11-4).

29. Test-drive the vehicle for several minutes in the range of these recorded freeze data parameters:

    - ENGINE SPEED
    - VSS
    - REL TP SENSOR
    - CLV (calculated load value)
    - APP SENSOR

30. Check for Temporary DTCs or DTCs with the HDS.

    *Is DTC P0300, P0301, P0302, P0303, or P0304 indicated?*

    **YES**—Check for poor connections or loose terminals at the ignition coil, the injector, and the PCM, then go to troubleshooting DTC P0301, P0302, P0303, or P0304 (see page 11-135).

    **NO**—Go to step 31.

31. Monitor the OBD STATUS for DTC P0301, P0302, P0303, or P0304 in the DTCs MENU with the HDS.

    *Does the screen indicate PASSED?*

    **YES**—Troubleshooting is complete. If any other Temporary DTCs or DTCs were indicated in step 30, go to the indicated DTC's troubleshooting. ■

    **NO**—If the screen indicates FAILED, go to step 1 and recheck. If the screen indicates EXECUTING, keep driving until a result comes on. If the screen indicates OUT OF CONDITION, go to step 29 and recheck.



BACK

Protected by AR

**DTC P0301:** No. 1 Cylinder Misfire Detected

**DTC P0302:** No. 2 Cylinder Misfire Detected

**DTC P0303:** No. 3 Cylinder Misfire Detected

**DTC P0304:** No. 4 Cylinder Misfire Detected

NOTE: Before you troubleshoot, record all freeze data and any on-board snapshot, and review the general troubleshooting information (see page 11-3).

1. Turn the ignition switch ON (II).

2. Clear the DTC with the HDS.

3. Start the engine, and let it idle without load (in Park or neutral).

4. Monitor the OBD STATUS for DTC P0301, P0302, P0303, or P0304 in the DTCs MENU with the HDS.

   *Does the screen indicate FAILED?*

   **YES**—Go to step 9.

   **NO**—If the screen indicates PASSED, go to step 5. If the screen indicates EXECUTING, let the engine idle until a result comes on. If the screen indicates OUT OF CONDITION, wait for several minutes, and recheck.

5. Check the CYL1 MISFIRE, CYL2 MISFIRE, CYL3 MISFIRE, and/or CYL4 MISFIRE in the DATA LIST for 10 minutes with the HDS.

   *Does the CYL1 MISFIRE, CYL2 MISFIRE, CYL3 MISFIRE, and/or CYL4 MISFIRE show misfire counts?*

   **YES**—Go to step 9.

   **NO**—Go to step 6.

6. Test-drive the vehicle for several minutes in the range of these recorded freeze data parameters:

   - ENGINE SPEED
   - VSS
   - REL TP SENSOR
   - CLV (calculated load value)
   - APP SENSOR
   - GEAR POSITION

7. Monitor the OBD STATUS for DTC P0301, P0302, P0303, or P0304 in the DTCs MENU with the HDS.

   *Does the screen indicate FAILED?*

   **YES**—Go to step 9.

   **NO**—If the screen indicates PASSED, go to step 8. If the screen indicates EXECUTING, keep driving until a result comes on. If the screen indicates OUT OF CONDITION, go to step 6 and recheck.

8. Check the CYL1 MISFIRE, CYL2 MISFIRE, CYL3 MISFIRE, and/or CYL4 MISFIRE in the DATA LIST for 10 minutes with the HDS.

   *Does the CYL1 MISFIRE, CYL2 MISFIRE, CYL3 MISFIRE, and/or CYL4 MISFIRE show misfire counts?*

   **YES**—Go to step 9.

   **NO**—Intermittent failure, the system is OK at this time. Check for loose wires or poor connections in the fuel system circuit. ■

9. Turn the ignition switch OFF.

10. Remove the charge air cooler (see page 9-7), and the injector cover, then reinstall the charge air cooler.

11. Start the engine, and listen for a clicking sound at the injector of the problem cylinder.

    *Does the injector click?*

    **YES**—Go to step 12.

    **NO**—Go to step 42.

(cont'd)

Protected by AR



## DTC Troubleshooting (cont'd)

12. Turn the ignition switch OFF.

13. Exchange the ignition coil from the problem cylinder with one from another cylinder.

14. Test-drive the vehicle for several minutes in the range of these recorded freeze data parameters:

    - ENGINE SPEED
    - VSS
    - REL TP SENSOR
    - CLV (calculated load value)
    - APP SENSOR
    - GEAR POSITION

15. Check the CYL1 MISFIRE, CYL2 MISFIRE, CYL3 MISFIRE, and/or CYL4 MISFIRE in the DATA LIST for 10 minutes with the HDS.

    *Does the CYL1 MISFIRE, CYL2 MISFIRE, CYL3 MISFIRE, and/or CYL4 MISFIRE show misfire counts?*

    **YES**—Go to step 16.

    **NO**—Intermittent misfire due to poor contact at the ignition coil connector. (no misfire at this time). Make sure the coil connections are secure.■

16. Determine which cylinder had the misfire.

    *Does the misfire occur in the cylinder where the ignition coil was exchanged?*

    **YES**—Replace the faulty ignition coil (see page 4-20), then go to step 60.

    **NO**—Go to step 17.

17. Turn the ignition switch OFF.

18. Exchange the spark plug from the problem cylinder with one from another cylinder.

19. Test-drive the vehicle for several minutes in the range of these recorded freeze data parameters:

    - ENGINE SPEED
    - VSS
    - REL TP SENSOR
    - CLV (calculated load value)
    - APP SENSOR
    - GEAR POSITION

20. Check the CYL1 MISFIRE, CYL2 MISFIRE, CYL3 MISFIRE, and/or CYL4 MISFIRE in the DATA LIST for 10 minutes with the HDS.

    *Does the CYL1 MISFIRE, CYL2 MISFIRE, CYL3 MISFIRE, and/or CYL4 MISFIRE show misfire counts?*

    **YES**—Go to step 21.

    **NO**—Intermittent misfire due to spark plug fouling (no misfire at this time).■

21. Determine which cylinder had the misfire.

    *Does the misfire occur in the cylinder where the spark plug was exchanged?*

    **YES**—Replace the faulty spark plug, then go to step 60.

    **NO**—Go to step 22.

22. Turn the ignition switch OFF.

23. Exchange the injector from the problem cylinder with one from the another cylinder.

24. Start the engine, and let it idle for 2 minutes.

25. Test-drive the vehicle for several minutes in the range of these recorded freeze data parameters:

    - ENGINE SPEED
    - VSS
    - REL TP SENSOR
    - CLV (calculated load value)
    - APP SENSOR
    - GEAR POSITION

26. Check the CYL1 MISFIRE, CYL2 MISFIRE, CYL3 MISFIRE, and/or CYL4 MISFIRE in the DATA LIST for 10 minutes with the HDS.

    *Does the CYL1 MISFIRE, CYL2 MISFIRE, CYL3 MISFIRE, and/or CYL4 MISFIRE show misfire counts?*

    **YES**—Go to step 27.

    **NO**—Intermittent misfire due to bad contact at the injector connector (no misfire at this time). Check for poor connections or loose terminals at the injector.■



BACK

Protected by AR

27. Determine which cylinder had the misfire.

    *Does the misfire occur in the cylinder where the injector was exchanged?*

    **YES**—Replace the faulty injector (see page 11-243), then go to step 60.

    **NO**—Go to step 28.

28. Turn the ignition switch OFF.

29. Disconnect the ignition coil 3P connector from the problem cylinder.

30. Turn the ignition switch ON (II).

31. Measure voltage between ignition coil 3P connector terminal No. 3 and body ground.

**IGNITION COIL 3P CONNECTOR**

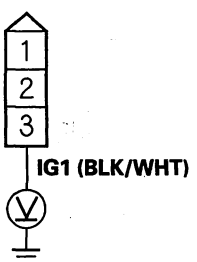


Wire side of female terminals

*Is there battery voltage?*

**YES**—Go to step 32.

**NO**—Repair open in the wire between the ignition coil and the ignition coil relay, then go to step 60.

32. Turn the ignition switch OFF.

33. Check for continuity between ignition coil 3P connector terminal No. 2 and body ground.

**IGNITION COIL 3P CONNECTOR**

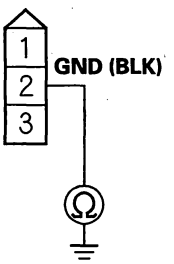


Wire side of female terminals

*Is there continuity?*

**YES**—Go to step 34.

**NO**—Repair open in the wire between the ignition coil and G101 (see page 22-18), then go to step 60.

(cont'd)

Protected by AR



## DTC Troubleshooting (cont'd)

34. Turn the ignition switch OFF.

35. Jump the SCS line with the HDS.

36. Disconnect PCM connector C (44P).

37. Check for continuity between body ground and the appropriate PCM connector terminal of the problem cylinder (see table).

| PROBLEM CYLINDER | DTC | PCM TERMINAL | WIRE COLOR |
|---|---|---|---|
| No. 1 | P0301 | C15 | YEL/GRN |
| No. 2 | P0302 | C16 | BLU/RED |
| No. 3 | P0303 | C17 | WHT/BLU |
| No. 4 | P0304 | C18 | BRN |

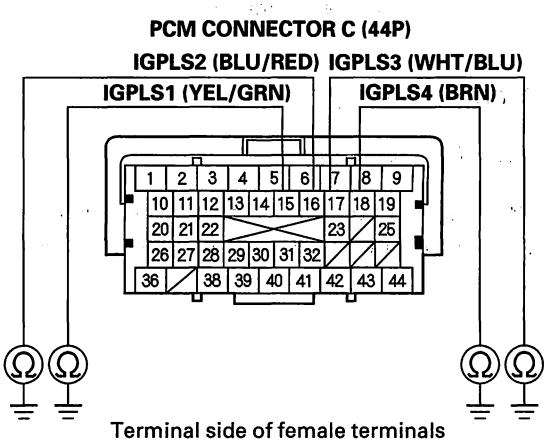


*Is there continuity?*

**YES**—Repair short in the wire between the PCM and the ignition coil, then go to step 60.

**NO**—Go to step 38.

38. Check for continuity between appropriate ignition coil 3P connector terminal No. 1 and the appropriate PCM connector terminal of the problem cylinder (see table).

| PROBLEM CYLINDER | DTC | PCM TERMINAL | WIRE COLOR |
|---|---|---|---|
| No. 1 | P0301 | C15 | YEL/GRN |
| No. 2 | P0302 | C16 | BLU/RED |
| No. 3 | P0303 | C17 | WHT/BLU |
| No. 4 | P0304 | C18 | BRN |

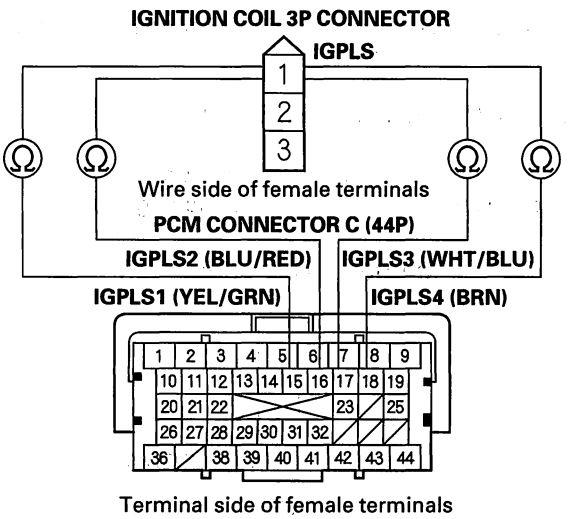


*Is there continuity?*

**YES**—Go to step 39.

**NO**—Repair open in the wire between the PCM and the ignition coil, then go to step 60.



BACK

Protected by AR

39. Reconnect all connectors.

40. Do an engine compression and a cylinder leakdown test (see page 6-6).

    *Did the engine pass both tests?*

    **YES**—Go to step 41.

    **NO**—Repair the engine, then go to step 60.

41. Do the VTEC rocker arm test (see page 6-7).

    *Did the engine pass the test?*

    **YES**—Go to step 42.

    **NO**—Repair the VTEC rocker arm (see page 6-38), then go to step 60.

42. Turn the ignition switch OFF.

43. Jump the SCS line with the HDS.

44. Disconnect PCM connector C (44P).

45. Turn the ignition switch ON (II).

46. Measure voltage between body ground and the appropriate PCM connector terminal of the problem cylinder (see table).

| PROBLEM CYLINDER | DTC | PCM TERMINAL | WIRE COLOR |
|---|---|---|---|
| No. 1 | P0301 | C5 | BRN |
| No. 2 | P0302 | C6 | RED |
| No. 3 | P0303 | C7 | BLU |
| No. 4 | P0304 | C8 | YEL |

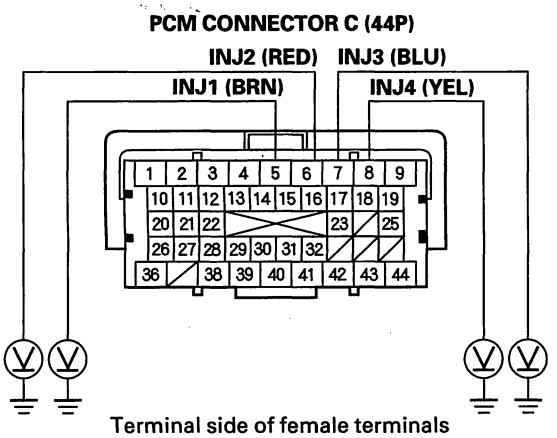


*Is there battery voltage?*

**YES**—Go to step 54.

**NO**—Go to step 47.

(cont'd)

Protected by AR



## DTC Troubleshooting (cont'd)

47. Turn the ignition switch OFF.

48. Disconnect the injector 2P connector from the problem cylinder.

49. Turn the ignition switch ON (II).

50. Measure voltage between injector 2P connector terminal No. 1 and body ground.

**INJECTOR 2P CONNECTOR**

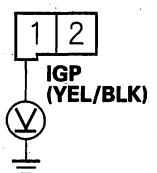


Wire side of female terminals

*Is there battery voltage?*

**YES**—Go to step 51.

**NO**—Repair open in the wire between the injector and PGM-FI main relay 1 (C), then go to step 60.

51. Turn the ignition switch OFF.

52. Check for continuity between body ground and the appropriate PCM connector terminal of the problem cylinder (see table).

| PROBLEM CYLINDER | DTC | PCM TERMINAL | WIRE COLOR |
|---|---|---|---|
| No. 1 | P0301 | C5 | BRN |
| No. 2 | P0302 | C6 | RED |
| No. 3 | P0303 | C7 | BLU |
| No. 4 | P0304 | C8 | YEL |

**PCM CONNECTOR C (44P)**

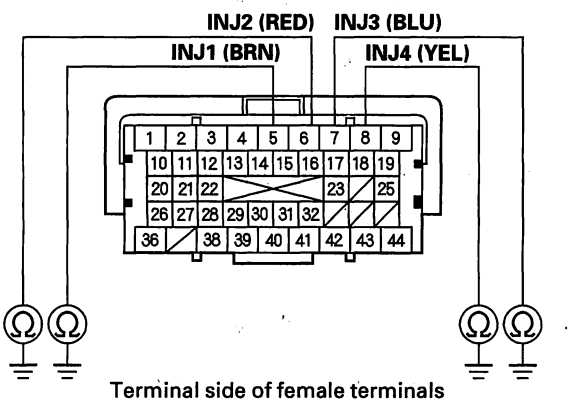


Terminal side of female terminals

*Is there continuity?*

**YES**—Repair short in the wire between the PCM and the injector, then go to step 60.

**NO**—Go to step 53.



BACK

Protected by AR

53. Check for continuity between appropriate injector 2P connector terminal No. 2 and the appropriate PCM connector terminal of the problem cylinder (see table).

| PROBLEM CYLINDER | DTC | PCM TERMINAL | WIRE COLOR |
|---|---|---|---|
| No. 1 | P0301 | C5 | BRN |
| No. 2 | P0302 | C6 | RED |
| No. 3 | P0303 | C7 | BLU |
| No. 4 | P0304 | C8 | YEL |

**INJECTOR 2P CONNECTOR**

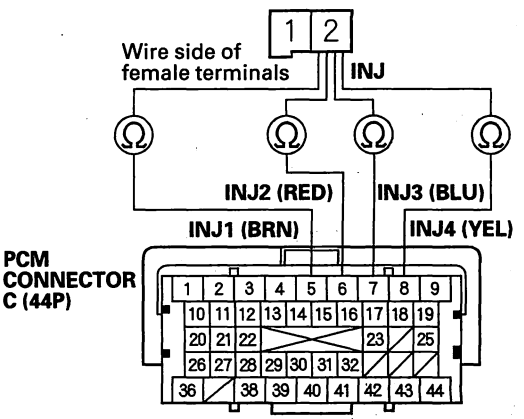


Terminal side of female terminals

*Is there continuity?*

**YES**—Go to step 54.

**NO**—Repair open in the wire between the PCM and the injector, then go to step 60.

54. At the injector side, measure resistance between injector 2P connector terminals No. 1 and No. 2.

**INJECTOR 2P CONNECTOR**

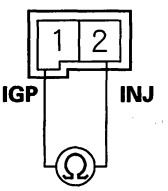


Terminal side of male terminals

*Is there 10– 13 Ω ?*

**YES**—Go to step 55.

**NO**—Replace the injector (see page 11-243), then go to step 60.

55. Substitute a known-good injector into the problem cylinder.

56. Reconnect all connectors.

57. Start the engine, and let it idle for 2 minutes.

58. Test-drive the vehicle for several minutes in the range of these recorded freeze data parameters:

- ENGINE SPEED
- VSS
- REL TP SENSOR
- CLV (calculated load value)
- APP SENSOR
- GEAR POSITION

(cont'd)

Protected by AR



## DTC Troubleshooting (cont'd)

59. Check the CYL1 MISFIRE, CYL2 MISFIRE, CYL3 MISFIRE, and/or CYL4 MISFIRE in the DATA LIST for 10 minutes with the HDS.

    *Does the CYL1 MISFIRE, CYL2 MISFIRE, CYL3 MISFIRE, and/or CYL4 MISFIRE show misfire counts?*

    **YES**—Go to step 70.

    **NO**—Replace the original injector (see page 11-243), then go to step 60.

60. Turn the ignition switch OFF.

61. Reconnect all connectors.

62. Turn the ignition switch ON (II).

63. Reset the PCM with the HDS.

64. Clear the CKP pattern with the HDS.

65. Do the PCM idle learn procedure (see page 11-339).

66. Do the CKP pattern learn procedure (see page 11-4).

67. Test-drive the vehicle for several minutes in the range of these recorded freeze data parameters:

    - ENGINE SPEED
    - VSS
    - REL TP SENSOR
    - CLV (calculated load value)
    - APP SENSOR
    - GEAR POSITION

68. Check for Temporary DTCs or DTCs with the HDS.

    *Is DTC P0301, P0302, P0303, or P0304 indicated?*

    **YES**—Check for poor connections or loose terminals at the ignition coil, the injector, and the PCM, then go to troubleshooting DTC P0300, P0301, P0302, P0303, or P0304 (see page 11-132).

    **NO**—Go to step 69.

69. Monitor the OBD STATUS for DTC P0301, P0302, P0303, or P0304 in the DTCs MENU with the HDS.

    *Does the screen indicate PASSED?*

    **YES**—Troubleshooting is complete. If any other Temporary DTCs or DTCs were indicated in step 68, go to the indicated DTC's troubleshooting. ■

    **NO**—If the screen indicates FAILED, check for poor connections or loose terminals at the ignition coil, the injector, and the PCM, then go to step 1. If the screen indicates EXECUTING, keep driving until a result comes on. If the screen indicates OUT OF CONDITION, go to step 67.

70. Update the PCM if it does not have the latest software (see page 11-7), or substitute a known-good PCM (see page 11-8).

71. Test-drive the vehicle for several minutes in the range of these recorded freeze data parameters:

    - ENGINE SPEED
    - VSS
    - REL TP SENSOR
    - CLV (calculated load value)
    - APP SENSOR
    - GEAR POSITION



BACK

Protected by AR

72. Check for Temporary DTCs or DTCs with the HDS.

    *Is DTC P0301, P0302, P0303, or P0304 indicated?*

    **YES**—Check for poor connections or loose terminals at the ignition coil, the injector, and the PCM. If the PCM was updated, substitute a known-good PCM (see page 11-8), then go to step 71. If the PCM was substituted, go to step 1.

    **NO**—Go to step 73.

73. Monitor the OBD STATUS for DTC P0301, P0302, P0303, or P0304 in the DTCs MENU with the HDS.

    *Does the screen indicate PASSED?*

    **YES**—If the PCM was updated, troubleshooting is complete. If the PCM was substituted, replace the original PCM (see page 11-252). If any other Temporary DTCs or DTCs were indicated in step 72, go to the indicated DTC's troubleshooting.■

    **NO**—If the screen indicates FAILED, check for poor connections or loose terminals at the ignition coil, the injector, and the PCM. If the PCM was updated, substitute a known-good PCM (see page 11-8), then go to step 71. If the PCM was substituted, go to step 1. If the screen indicates EXECUTING, keep driving until a result comes on. If the screen indicates OUT OF CONDITION, go to step 71.

Protected by AR



## DTC Troubleshooting (cont'd)

### DTC P0325: Knock Sensor Circuit Malfunction

NOTE: Before you troubleshoot, record all freeze data and any on-board snapshot, and review the general troubleshooting information (see page 11-3).

1. Turn the ignition switch ON (II).
2. Clear the DTC with the HDS.
3. Start the engine. Hold the engine speed between 3,000 rpm without load (in Park or neutral) until the radiator fan comes on, then let it idle.
4. Hold the engine speed between 3,000—4,000 rpm for at least 10 seconds.
5. Check for Temporary DTCs or DTCs with the HDS.

   *Is DTC P0325 indicated?*

   **YES**—Go to step 6.

   **NO**—Intermittent failure, the system is OK at this time. Check for poor connections or loose terminals at the knock sensor and the PCM. ■

6. Turn the ignition switch OFF.
7. Jump the SCS line with the HDS.
8. Disconnect the knock sensor 1P connector (see page 11-250).
9. Disconnect PCM connector C (44P).
10. Check for continuity between PCM connector terminal C42 and body ground.

**PCM CONNECTOR C (44P)**

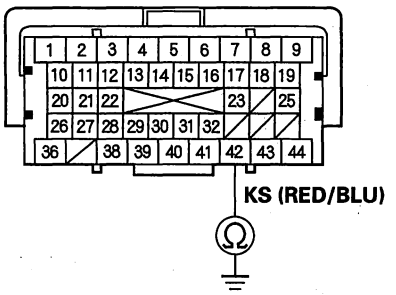


Terminal side of female terminals

*Is there continuity?*

**YES**—Repair short in the wire between the PCM (C42) and the knock sensor, then go to step 14.

**NO**—Go to step 11.

11. Connect the knock sensor 1P connector terminal to body ground with a jumper wire.

**KNOCK SENSOR 1P CONNECTOR**

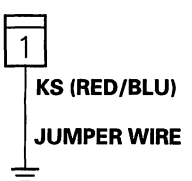


Wire side of female terminals



BACK

Protected by AR

12. Check for continuity between PCM connector terminal C42 and body ground.

**PCM CONNECTOR C (44P)**

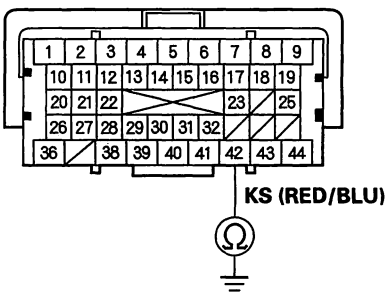


Terminal side of female terminals

*Is there continuity?*

**YES**—Go to step 13.

**NO**—Repair open in the wire between the PCM (C42) and the knock sensor, then go to step 14.

13. Replace the knock sensor (see page 11-250).

14. Reconnect all connectors.

15. Turn the ignition switch ON (II).

16. Reset the PCM with the HDS.

17. Do the PCM idle learn procedure (see page 11-339).

18. Hold the engine speed between 3,000—4,000 rpm for at least 10 seconds.

19. Check for Temporary DTCs or DTCs with the HDS.

*Is DTC P0325 indicated?*

**YES**—Go to step 21.

**NO**—Go to step 20.

20. Monitor the OBD STATUS for DTC P0325 in the DTCs MENU with the HDS.

*Does the screen indicate PASSED?*

**YES**—Troubleshooting is complete. If any other Temporary DTCs or DTCs were indicated in step 19, go to the indicated DTC's troubleshooting. ■

**NO**—If the screen indicates FAILED, check for poor connections or loose terminals at the knock sensor and the PCM, then go to step 1. If the screen indicates NOT COMPLETED, go to step 18.

21. Update the PCM if it does not have the latest software (see page 11-7), or substitute a known-good PCM (see page 11-8).

22. Hold the engine speed between 3,000—4,000 rpm for at least 10 seconds.

23. Check for Temporary DTCs or DTCs with the HDS.

*Is DTC P0325 indicated?*

**YES**—Check for poor connections or loose terminals at the knock sensor and the PCM. If the PCM was updated, substitute a known-good PCM (see page 11-8), then go to step 22. If the PCM was substituted, go to step 1.

**NO**—Go to step 24.

24. Monitor the OBD STATUS for DTC P0325 in the DTCs MENU with the HDS.

*Does the screen indicate PASSED?*

**YES**—If the PCM was updated, troubleshooting is complete. If the PCM was substituted, replace the original PCM (see page 11-252). If any other Temporary DTCs or DTCs were indicated in step 23, go to the indicated DTC's troubleshooting. ■

**NO**—If the screen indicates FAILED, check for poor connections or loose terminals at the knock sensor and the PCM. If the PCM was updated, substitute a known-good PCM (see page 11-8), then go to step 22. If the PCM was substituted, go to step 1. If the screen indicates NOT COMPLETED, go to step 22.

Protected by AR



## DTC Troubleshooting (cont'd)

### DTC P0335: CKP Sensor No Signal

NOTE: Before you troubleshoot, record all freeze data and any on-board snapshot, and review the general troubleshooting information (see page 11-3).

1. Turn the ignition switch ON (II).
2. Clear the DTC with the HDS.
3. Start the engine.
4. Check for Temporary DTCs or DTCs with the HDS.

   *Is DTC P0335 indicated?*

   **YES**—Go to step 5.

   **NO**—Intermittent failure, the system is OK at this time. Check for poor connections or loose terminals at the CKP sensor and the PCM. ■

5. Turn the ignition switch OFF.
6. Disconnect the CKP sensor 3P connector.
7. Turn the ignition switch ON (II).
8. Measure voltage between CKP sensor 3P connector terminal No. 1 and body ground.

**CKP SENSOR 3P CONNECTOR**

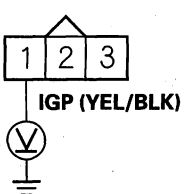


Wire side of female terminals

*Is there battery voltage?*

**YES**—Go to step 9.

**NO**—Repair open in the wire between the CKP sensor and PGM-FI main relay 1, then go to step 19.

9. Measure voltage between CKP sensor 3P connector terminal No. 2 and body ground.

**CKP SENSOR 3P CONNECTOR**

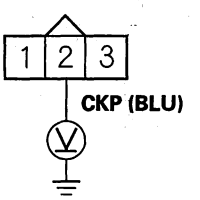


Wire side of female terminals

*Is there about 5 V?*

**YES**—Go to step 10.

**NO**—Go to step 11.

10. Measure voltage between CKP sensor 3P connector terminals No. 1 and No. 3.

**CKP SENSOR 3P CONNECTOR**

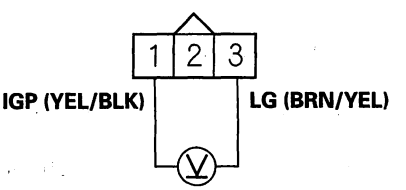


Wire side of female terminals

*Is there battery voltage?*

**YES**—Go to step 17.

**NO**—Repair open in the wire between the CKP sensor and G101 (see page 22-18), then go to step 19.



BACK

Protected by AR

11. Turn the ignition switch OFF.

12. Jump the SCS line with the HDS.

13. Disconnect PCM connector C (44P).

14. Check for continuity between PCM connector terminal C32 and body ground.

**PCM CONNECTOR C (44P)**

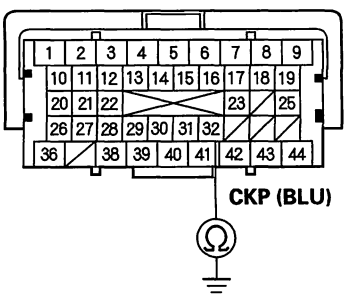


Terminal side of female terminals

*Is there continuity?*

**YES**—Repair short in the wire between the PCM (C32) and the CKP sensor, then go to step 19.

**NO**—Go to step 15.

15. Connect CKP sensor 3P connector terminal No. 2 to body ground with a jumper wire.

**CKP SENSOR 3P CONNECTOR**

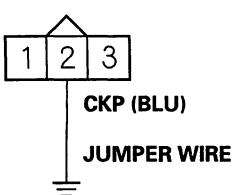


Wire side of female terminals

16. Check for continuity between PCM connector terminal C32 and body ground.

**PCM CONNECTOR C (44P)**

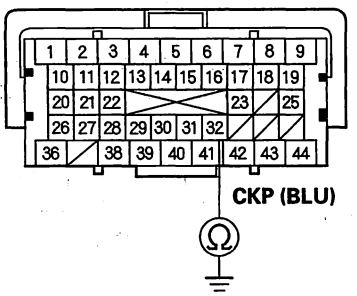


Terminal side of female terminals

*Is there continuity?*

**YES**—Go to step 26.

**NO**—Repair open in the wire between the PCM (C32) and the CKP sensor, then go to step 19.

17. Turn the ignition switch OFF.

18. Replace the CKP sensor (see page 11-246).

19. Reconnect all connectors.

20. Turn the ignition switch ON (II).

21. Reset the PCM with the HDS.

22. Clear the CKP pattern with the HDS.

23. Do the PCM idle learn procedure (see page 11-339).

(cont'd)

Protected by AR



## DTC Troubleshooting (cont'd)

24. Do the CKP pattern learn procedure (see page 11-4).

25. Check for Temporary DTCs or DTCs with the HDS.

    *Is DTC P0335 indicated?*

    **YES**—Check for poor connections or loose terminals at the CKP sensor and the PCM, then go to step 1.

    **NO**—Troubleshooting is complete. If any other Temporary DTCs or DTCs are indicated, go to the indicated DTC's troubleshooting. ■

26. Reconnect all connectors.

27. Update the PCM if it does not have the latest software (see page 11-7), or substitute a known-good PCM (see page 11-8).

28. Check for Temporary DTCs or DTCs with the HDS.

    *Is DTC P0335 indicated?*

    **YES**—Check for poor connections or loose terminals at the CKP sensor and the PCM. If the PCM was updated, substitute a known-good PCM (see page 11-8), then recheck. If the PCM was substituted, go to step 1.

    **NO**—If the PCM was updated, troubleshooting is complete. If the PCM was substituted, replace the original PCM (see page 11-252). If any other Temporary DTCs or DTCs are indicated, go to the indicated DTC's troubleshooting. ■



BACK

Protected by AR

## **DTC P0339:** CKP Sensor Intermittent Interruption

NOTE: Before you troubleshoot, record all freeze data and any on-board snapshot, and review the general troubleshooting information (see page 11-3).

1. Turn the ignition switch ON (II).
2. Clear the DTC with the HDS.
3. Start the engine, and let it idle for 10 seconds.
4. Check the CKP NOISE count in the DATA LIST with the HDS.

   *Are 0 counts indicated?*

   **YES**—Go to step 7.

   **NO**—Go to step 5.
5. Test-drive the vehicle for several minutes in the range of these recorded freeze data parameters:

   - ENGINE SPEED
   - VSS
6. Check the CKP NOISE count in the DATA LIST with the HDS.

   *Are 0 counts indicated?*

   **YES**—Go to step 7.

   **NO**—Intermittent failure, the system is OK at this time. Check for poor connections or loose terminals at the CKP sensor and the PCM. ■
7. Check for poor or loose connections and terminals at these locations:

   - CKP sensor
   - PCM
   - Engine ground
   - Body ground

   *Are the connections and terminals OK?*

   **YES**—Go to step 8.

   **NO**—Repair the connectors or terminals, then go to step 11.
8. Remove the cam chain case (see page 6-13), and check for damage on the CKP sensor pulser plate.

   *Is the pulser plate damaged?*

   **YES**—Replace the CKP sensor pulser plate (see page 6-26), then go to step 11.

   **NO**—Go to step 9.
9. Turn the ignition switch OFF.
10. Replace the CKP sensor (see page 11-246).
11. Turn the ignition switch ON (II).
12. Reset the PCM with the HDS.
13. Clear the CKP pattern with the HDS.
14. Do the PCM idle learn procedure (see page 11-339).
15. Do the CKP pattern learn procedure (see page 11-4).
16. Start the engine, and let it idle for 10 seconds.
17. Check for Temporary DTCs or DTCs with the HDS.

    *Is DTC P0339 indicated?*

    **YES**—Check for poor connections or loose terminals at the CKP sensor and the PCM, then go to step 1.

    **NO**—Troubleshooting is complete. If any other Temporary DTCs or DTCs are indicated, go to the indicated DTC's troubleshooting. ■

Protected by AR



## DTC Troubleshooting (cont'd)

### DTC P0365: CMP Sensor B No Signal

NOTE: Before you troubleshoot, record all freeze data and any on-board snapshot, and review the general troubleshooting information (see page 11-3).

1. Turn the ignition switch ON (II).
2. Clear the DTC with the HDS.
3. Start the engine.
4. Check for Temporary DTCs or DTCs with the HDS.

   *Is DTC P0365 indicated?*

   **YES**—Go to step 5.

   **NO**—Intermittent failure, the system is OK at this time. Check for poor connections or loose terminals at CMP sensor B and the PCM.■

5. Turn the ignition switch OFF.
6. Disconnect the CMP sensor B 3P connector.
7. Turn the ignition switch ON (II).
8. Measure voltage between CMP sensor B 3P connector terminal No. 3 and body ground.

**CKP SENSOR B 3P CONNECTOR**

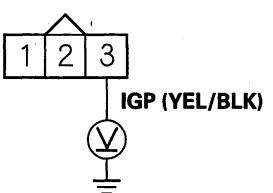


Wire side of female terminals

*Is there battery voltage?*

**YES**—Go to step 9.

**NO**—Repair open in the wire between CMP sensor B and PGM-FI main relay 1, then go to step 18.

9. Measure voltage between CMP sensor B 3P connector terminal No. 1 and body ground.

**CKP SENSOR B 3P CONNECTOR**

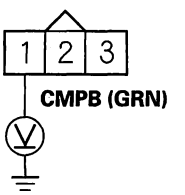


Wire side of female terminals

*Is there about 5 V?*

**YES**—Go to step 10.

**NO**—Go to step 11.

10. Measure voltage between CMP sensor 3P connector terminals No. 2 and No. 3.

**CKP SENSOR B 3P CONNECTOR**

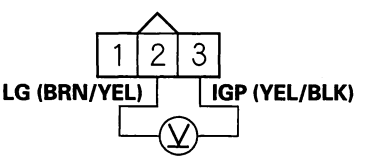


Wire side of female terminals

*Is there battery voltage?*

**YES**—Go to step 16.

**NO**—Repair open in the wire between CMP sensor B and G101 (see page 22-18), then go to step 18.



BACK

Protected by AR

11. Turn the ignition switch OFF.

12. Jump the SCS line with the HDS.

13. Disconnect PCM connector C (44P).

14. Check for continuity between PCM connector terminal C31 and body ground.

**PCM CONNECTOR C (44P)**

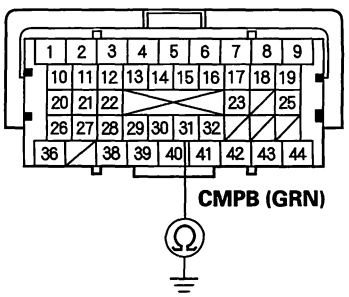


Terminal side of female terminals

*Is there continuity?*

**YES**—Repair short in the wire between the PCM (C31) and CMP sensor B, then go to step 18.

**NO**—Go to step 15.

15. Check for continuity between CMP sensor B 3P connector terminal No. 1 and PCM connector terminal C31.

**CMP SENSOR B 3P CONNECTOR**

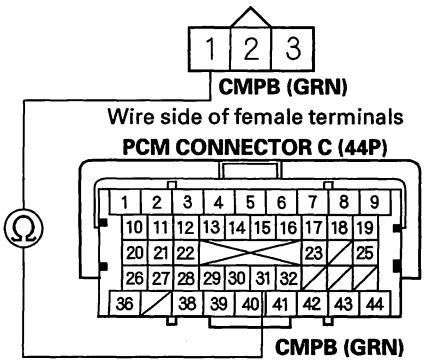


Terminal side of female terminals

*Is there continuity?*

**YES**—Go to step 23.

**NO**—Repair open in the wire between the PCM (C31) and CMP sensor B, then go to step 18.

(cont'd)

Protected by AR



## DTC Troubleshooting (cont'd)

16. Turn the ignition switch OFF.

17. Replace CMP sensor B (see page 11-246).

18. Reconnect all connectors.

19. Turn the ignition switch ON (II).

20. Reset the PCM with the HDS.

21. Do the PCM idle learn procedure (see page 11-339).

22. Check for Temporary DTCs or DTCs with the HDS.

    *Is DTC P0365 indicated?*

    **YES**—Check for poor connections or loose terminals at CMP sensor B and the PCM, then go to step 1.

    **NO**—Troubleshooting is complete. If any other Temporary DTCs or DTCs are indicated, go to the indicated DTC's troubleshooting.■

23. Reconnect all connectors.

24. Update the PCM if it does not have the latest software (see page 11-7), or substitute a known-good PCM (see page 11-8).

25. Check for Temporary DTCs or DTCs with the HDS.

    *Is DTC P0365 indicated?*

    **YES**—Check for poor connections or loose terminals at CMP sensor B and the PCM. If the PCM was updated, substitute a known-good PCM (see page 11-8), then recheck. If the PCM was substituted, go to step 1.

    **NO**—If the PCM was updated, troubleshooting is complete. If the PCM was substituted, replace the original PCM (see page 11-252). If any other Temporary DTCs or DTCs are indicated, go to the indicated DTC's troubleshooting.■



BACK

Protected by AR

## **DTC P0369:** CMP Sensor B Circuit Intermittent Interruption

NOTE: Before you troubleshoot, record all freeze data and any on-board snapshot, and review the general troubleshooting information (see page 11-3).

1. Turn the ignition switch ON (II).
2. Clear the DTC with the HDS.
3. Start the engine, and let it idle for 10 seconds.
4. Check the CMP NOISE B COUNT in the DATA LIST with the HDS.

   *Are 0 counts indicated?*

   **YES**—Go to step 7.

   **NO**—Go to step 5.

5. Test-drive the vehicle for several minutes in the range of these recorded freeze data parameters:

   - ENGINE SPEED
   - VSS

6. Check the CMP NOISE B COUNT in the DATA LIST with the HDS.

   *Are 0 counts indicated?*

   **YES**—Go to step 7.

   **NO**—Intermittent failure, the system is OK at this time. Check for poor connections or loose terminals at CMP sensor B and the PCM. ■

7. Check for poor or loose connections and terminals at these locations:

   - CMP sensor B
   - PCM
   - Engine ground
   - Body ground

   *Are the connections and terminals OK?*

   **YES**—Go to step 8.

   **NO**—Repair the connectors or terminals, then go to step 11.

8. Check for damage on the CMP sensor B pulser plate (see page 6-34).

   *Is the pulser plate damaged?*

   **YES**—Replace the CMP sensor B pulser plate (see page 6-34), then go to step 11.

   **NO**—Go to step 9.

9. Turn the ignition switch OFF.
10. Replace CMP sensor B (see page 11-246).
11. Turn the ignition switch ON (II).
12. Reset the PCM with the HDS.
13. Do the PCM idle learn procedure (see page 11-339).
14. Start the engine, and let it idle for 10 seconds.
15. Check for Temporary DTCs or DTCs with the HDS.

    *Is DTC P0369 indicated?*

    **YES**—Check for poor connections or loose terminals at CMP sensor B and the PCM, then go to step 1.

    **NO**—Troubleshooting is complete. If any other Temporary DTCs or DTCs are indicated, go to the indicated DTC's troubleshooting. ■

Protected by AR



## DTC Troubleshooting (cont'd)

### DTC P050A: Cold Start Idle Air Control System Performance Problem

NOTE: Before you troubleshoot, record all freeze data and any on-board snapshot, and review the general troubleshooting information (see page 11-3).

1. Turn the ignition switch ON (II).

2. Check for Temporary DTCs or DTCs with the HDS.

   *Are any Temporary DTCs or DTCs other than P050A indicated?*

   **YES**—Go to the indicated DTC's troubleshooting. ■

   **NO**—Go to step 3.

3. Check for poor connections or blockage at the air intake duct.

   *Is it OK?*

   **YES**—Go to step 4.

   **NO**—Reconnect or repair the air intake duct, then go to step 20.

4. Check for damage at the air cleaner housing.

   *Is it OK?*

   **YES**—Go to step 5.

   **NO**—Replace the air cleaner housing (see page 11-394), then go to step 20.

5. Check for dirt or debris in the air cleaner element.

   *Is it dirty?*

   **YES**—Replace the air cleaner element or remove the debris (see page 11-395), then go to step 20.

   **NO**—Go to step 6.

6. Let the engine cool until the value of ECT SENSOR 1 is 122 °F (50 °C) or less.

7. Clear the DTC with the HDS.

8. Start the engine, and let it idle 10 seconds or more.

9. Monitor the OBD STATUS for DTC P050A in the DTCs MENU with the HDS.

   *Does the screen indicate FAILED?*

   **YES**—Go to step 10.

   **NO**—If the screen indicates PASSED, intermittent failure, the system is OK at this time. If the screen indicates EXECUTING, let the engine idle until a result comes on. If the screen indicates OUT OF CONDITION, go to step 6 and recheck.

10. Do the ETCS TEST in the INSPECTION MENU with the HDS.

    *Is the THROTTLE ACTUATOR CONTROL VALVE normal?*

    **YES**—Go to step 11.

    **NO**—Replace the throttle body (see page 11-396), then go to step 20.

11. Start the engine. Hold the engine speed at 3,000 rpm without load (in Park or neutral) until the radiator fan comes on, then let it idle.



BACK

Protected by AR

12. Monitor the ENGINE SPEED in the DATA LIST with the HDS, and hold the engine speed at 2,500 rpm for at least 30 seconds.

13. While holding the engine speed at 2,500 rpm, check the MAF SENSOR in the DATA LIST with the HDS.

    *Is there about 7.8– 11.2 gm/s?*

    **YES**—Go to step 14.

    **NO**—Replace the MAF sensor/IAT sensor 1 (see page 11-247), then go to step 20.

14. Turn the ignition switch OFF.

15. Allow the engine to cool to ambient temperature.

16. Note the ambient temperature.

17. Turn the ignition switch ON (II).

18. Note the value of IAT SENSOR quickly in the DATA LIST with the HDS.

19. Compare the value of the IAT SENSOR and the ambient temperature.

    *Does the value of the IAT SENSOR differ 5.4 °F (3 °C) or more?*

    **YES**—Replace the MAF sensor/IAT sensor 1 (see page 11-247), then go to step 20.

    **NO**—Check for dirt, carbon, or damage in the throttle bore. If there is dirt or carbon, clean the throttle body (see page 11-394), then go to step 20. If there is damage in the throttle bore, replace the throttle body (see page 11-396), then go to step 20.

20. Turn the ignition switch ON (II).

21. Reset the PCM with the HDS.

22. Do the PCM idle learn procedure (see page 11-339).

23. Let the engine cool until the value of ECT SENSOR 1 is 122 °F (50 °C) or less.

24. Start the engine, and let it idle for 10 seconds or more.

25. Check for Temporary DTCs or DTCs with the HDS.

    *Is DTC P050A indicated?*

    **YES**—Check for poor connections or loose terminals at the throttle body, the MAF sensor/IAT sensor 1, and the PCM, then go to step 1.

    **NO**—Go to step 26.

26. Monitor the OBD STATUS for DTC P050A in the DTCs MENU with the HDS.

    *Does the screen indicate PASSED?*

    **YES**—Troubleshooting is complete. If any other Temporary DTCs or DTCs were indicated in step 25, go to the indicated DTC's troubleshooting. ■

    **NO**—If the screen indicates FAILED, check for poor connections or loose terminals at the throttle body, the MAF sensor/IAT sensor 1, and the PCM, then go to step 1. If the screen indicates EXECUTING, keep idling until a result comes on. If the screen indicates OUT OF CONDITION, go to step 23.

Protected by AR



## DTC Troubleshooting (cont'd)

### DTC P050B: Cold Start Ignition Timing Control System Performance Problem

NOTE: Before you troubleshoot, record all freeze data and any on-board snapshot, and review the general troubleshooting information (see page 11-3).

1. Turn the ignition switch ON (II).

2. Check for Temporary DTCs or DTCs with the HDS.

   *Are any Temporary DTCs or DTCs other than P050B indicated?*

   **YES**—Go to the indicated DTC's troubleshooting. ■

   **NO**—Go to step 3.

3. Check for poor connections or blockage at the air intake duct.

   *Is it OK?*

   **YES**—Go to step 4.

   **NO**—Reconnect or repair the air intake duct, then go to step 25.

4. Check for damage at the air cleaner housing.

   *Is it OK?*

   **YES**—Go to step 5.

   **NO**—Replace the air cleaner housing (see page 11-394), then go to step 25.

5. Check for dirt or debris in the air cleaner element.

   *Is it dirty?*

   **YES**—Replace the air cleaner element or remove the debris (see page 11-395), then go to step 25.

   **NO**—Go to step 6.

6. Let the engine cool until the value of ECT SENSOR 1 is 122 °F (50 °C) or less.

7. Clear the DTC with the HDS.

8. Start the engine, and let it idle 10 seconds or more.

9. Monitor the OBD STATUS for DTC P050B in the DTCs MENU with the HDS.

   *Does the screen indicate FAILED?*

   **YES**—Go to step 10.

   **NO**—If the screen indicates PASSED, intermittent failure, the system is OK at this time. If the screen indicates EXECUTING, keep idling until a result comes on. If the screen indicates OUT OF CONDITION, go to step 6 and recheck.

10. Inspect the ignition timing (see page 4-19).

    *Is the ignition timing OK?*

    **YES**—Go to step 12.

    **NO**—Go to step 11.

11. Check for damage at the CKP sensor (see page 11-246) and the CKP sensor pulser plate (see page 6-26).

    *Is the CKP sensor and/or the CKP sensor pulser plate damaged?*

    **YES**—Replace the CKP sensor (see page 11-246) and/or the CKP sensor pulser plate (see page 6-26), then go to step 26.

    **NO**—Go to step 32.



BACK

Protected by AR

12. Do the ETCS TEST in the INSPECTION MENU with the HDS.

    *Is the THROTTLE ACTUATOR CONTROL VALVE normal?*

    **YES**—Go to step 13.

    **NO**—Replace the throttle body (see page 11-396), then go to step 25.

13. Start the engine. Hold the engine speed at 3,000 rpm without load (in Park or neutral) until the radiator fan comes on, then let it idle.

14. Monitor the ENGINE SPEED in the DATA LIST with the HDS, and hold the engine speed at 2,500 rpm for at least 30 seconds.

15. While holding the engine speed at 2,500 rpm, check the MAF SENSOR in the DATA LIST with the HDS.

    *Is there about 7.8– 11.2 gm/s?*

    **YES**—Go to step 16.

    **NO**—Replace the MAF sensor/IAT sensor 1 (see page 11-247), then go to step 25.

16. Turn the ignition switch OFF.

17. Drain the coolant (see page 10-7).

18. Remove ECT sensor 1 (see page 11-249), and ECT sensor 2 (see page 11-250).

19. Allow the sensors to cool to ambient temperature.

20. Note the ambient temperature.

21. Connect ECT sensor 1 to its 2P connector, and ECT sensor 2 to its 2P connector, but do not install them on the engine or the radiator.

22. Turn the ignition switch ON (II).

23. Note the value of ECT SENSOR 1 and ECT SENSOR 2 quickly in the DATA LIST with the HDS.

24. Compare the value of ECT SENSOR 1 and the ambient temperature, and the value of ECT SENSOR 2 and the ambient temperature individually.

    *Does either sensor differ more than 5.4 °F (3 °C) from the ambient temperature?*

    **YES**—Replace the sensor that differed more than 5.4 °F (3 °C) from the ambient temperature, then go to step 25.

    **NO**—Check and repair any problems with the following items, then go to step 25.

    - Engine compression and cylinder leakdown
    - VTEC system
    - Engine oil
    - A/C system
    - Power steering

25. Turn the ignition switch ON (II).

26. Reset the PCM with the HDS.

27. Do the PCM idle learn procedure (see page 11-339).

28. Let the engine cool until the value of ECT SENSOR 1 is 122 °F (50 °C) or less.

29. Start the engine, and let it idle 10 seconds or more.

30. Check for Temporary DTCs or DTCs with the HDS.

    *Is DTC P050B indicated?*

    **YES**—Check for poor connections or loose terminals at the CKP sensor, the throttle body, the MAF sensor/IAT sensor 1, ECT sensor 1, ECT sensor 2, and the PCM, then go to step 1.

    **NO**—Go to step 31.

(cont'd)

Protected by AR



## DTC Troubleshooting (cont'd)

31. Monitor the OBD STATUS for DTC P050B in the DTCs MENU with the HDS.

    *Does the screen indicate PASSED?*

    **YES**—Troubleshooting is complete. If any other Temporary DTCs or DTCs were indicated in step 30, go to the indicated DTC's troubleshooting.■

    **NO**—If the screen indicates FAILED, check for poor connections or loose terminals at the CKP sensor, the throttle body, the MAF sensor/IAT sensor 1, ECT sensor 1, ECT sensor 2, and the PCM, then go to step 1. If the screen indicates EXECUTING, keep idling until a result comes on. If the screen indicates OUT OF CONDITION, go to step 28.

32. Update the PCM if it does not have the latest software (see page 11-7), or substitute a known-good PCM (see page 11-8).

33. Let the engine cool until the value of ECT SENSOR 1 is 122 °F (50 °C) or less.

34. Start the engine, and let it idle 10 seconds or more.

35. Check for Temporary DTCs or DTCs with the HDS.

    *Is DTC P050B indicated?*

    **YES**—Check for poor connections or loose terminals at the CKP sensor, the throttle body, the MAF sensor/IAT sensor 1, ECT sensor 1, ECT sensor 2, and the PCM. If the PCM was updated, substitute a known-good PCM (see page 11-8), then go to step 33. If the PCM was substituted, go to step 1.

    **NO**—Go to step 36.

36. Monitor the OBD STATUS for DTC P050B in the DTCs MENU with the HDS.

    *Does the screen indicate PASSED?*

    **YES**—If the PCM was updated, troubleshooting is complete. If the PCM was substituted, replace the original PCM (see page 11-252). If any other Temporary DTCs or DTCs were indicated in step 35, go to the indicated DTC's troubleshooting.■

    **NO**—If the screen indicates FAILED, check for poor connections or loose terminals at the CKP sensor, the throttle body, the MAF sensor/IAT sensor 1, ECT sensor 1, ECT sensor 2, and the PCM. If the PCM was updated, substitute a known-good PCM (see page 11-8), then go to step 33. If the PCM was substituted, go to step 1. If the screen indicates EXECUTING, keep idling until a result comes on. If the screen indicates OUT OF CONDITION, go to step 33.



BACK

Protected by AR

## **DTC P0562:** Charging System Low Voltage

NOTE:
- Before you troubleshoot, record all freeze data and any on-board snapshot, and review the general troubleshooting information (see page 11-3).
- If any high current load accessories are installed, this DTC can be set.
- If DTC P16BB and/or P16BC is stored at the same time as DTC P0562, troubleshoot DTC P16BB and/or P16BC first, then recheck for DTC P0562.

1. Turn the ignition switch ON (II).
2. Clear the DTC with the HDS.
3. Start the engine.
4. Check under these conditions:
   - A/C on
   - Temperature control at maximum cool
   - Blower fan at maximum speed
   - Rear window defogger on
   - Headlights on high beam
5. Hold the engine speed at 2,000 rpm (in Park or neutral) for 1 minute.
6. Check for Temporary DTCs or DTCs with the HDS.

   *Is DTC P0562 indicated?*

   **YES**—Replace the alternator (see page 4-34), then go to step 7.

   **NO**—Intermittent failure, the system is OK at this time. Check for poor connections or loose terminals at the alternator and the under-hood fuse/relay box, and check the battery performance (see page 22-63).■
7. Turn the ignition switch ON (II).
8. Reset the PCM with the HDS.
9. Do the PCM idle learn procedure (see page 11-339).
10. Start the engine.
11. Check under these conditions:
    - A/C on
    - Temperature control at maximum cool
    - Blower fan at maximum speed
    - Rear window defogger on
    - Headlights on high beam
12. Hold the engine speed at 2,000 rpm (in Park or neutral) for 1 minute.
13. Check for Temporary DTCs or DTCs with the HDS.

    *Is DTC P0562 indicated?*

    **YES**—Check for poor connections or loose terminals at the alternator and the under-hood fuse/relay box, then go to step 1.

    **NO**—Troubleshooting is complete. If any other Temporary DTCs or DTCs are indicated, go to the indicated DTC's troubleshooting.■

Protected by AR



## DTC Troubleshooting (cont'd)

### DTC P0563: PCM Power Source Circuit Unexpected Voltage

NOTE: Before you troubleshoot, record all freeze data and any on-board snapshot, and review the general troubleshooting information (see page 11-3).

1. Turn the ignition switch ON (II).
2. Clear the DTC with the HDS.
3. Turn the ignition switch OFF.
4. Wait 10 seconds.
5. Turn the ignition switch ON (II).
6. Check for Temporary DTCs or DTCs with the HDS.

   *Is DTC P0563 indicated?*

   **YES**—Go to step 7.

   **NO**—Intermittent failure, the system is OK at this time. Check for poor connections or loose terminals at PGM-FI main relay 1 and the PCM. ■

7. Turn the ignition switch OFF.
8. Jump the SCS line with the HDS.
9. Disconnect PCM connector A (44P).
10. Measure voltage between PCM connector terminal A6 and body ground.

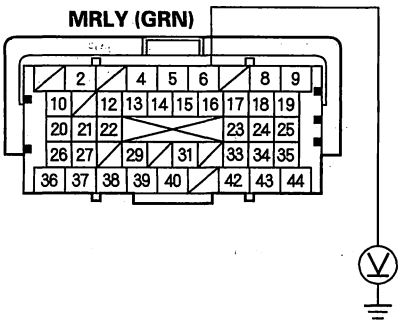


Terminal side of female terminals

*Is there battery voltage?*

**YES**—Go to step 13.

**NO**—Go to step 11.

11. Remove PGM-FI main relay 1 (C) from the under-hood fuse/relay box.

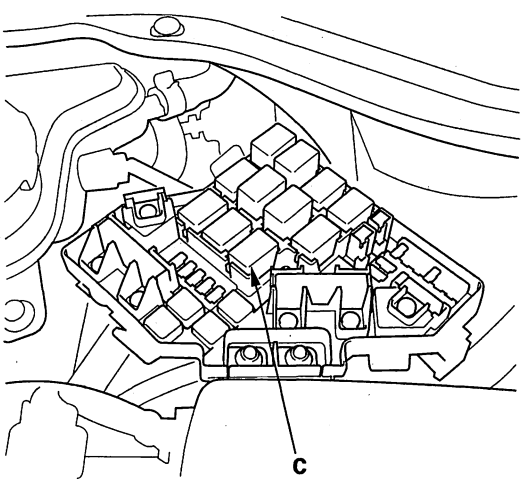




BACK

Protected by AR

12. Check for continuity between PCM connector terminal A6 and body ground.

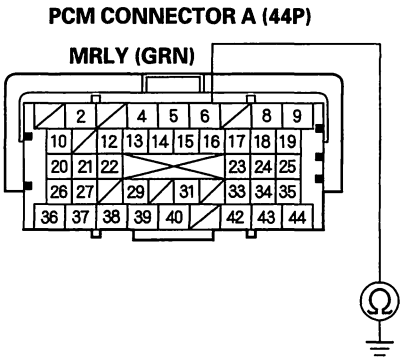


Terminal side of female terminals

*Is there continuity?*

**YES**—Repair short in the wire between the PCM (A6) and PGM-FI main relay 1, then go to step 16.

**NO**—Go to step 15.

13. Remove PGM-FI main relay 1 (C) from the under-hood fuse/relay box.

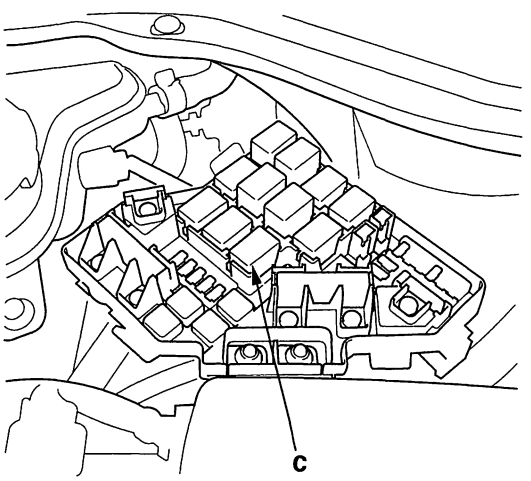


14. Measure voltage between PCM connector terminal A8 and body ground.

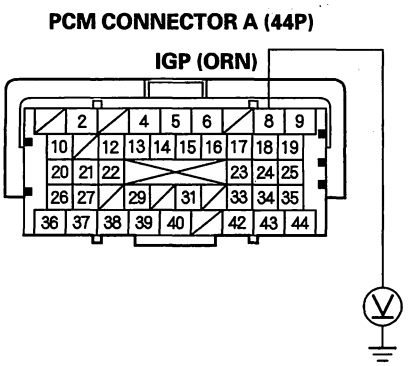


Terminal side of female terminals

*Is there battery voltage?*

**YES**—Repair short to power in the wire between the PCM (A8) and PGM-FI main relay 1, then go to step 16.

**NO**—Go to step 15.

15. Test PGM-FI main relay 1 (see page 22-64).

*Is PGM-FI main relay 1 OK?*

**YES**—Go to step 23.

**NO**—Replace PGM-FI main relay 1, then go to step 16.

(cont'd)

Protected by AR



## DTC Troubleshooting (cont'd)

16. Reconnect all connectors.

17. Turn the ignition switch ON (II).

18. Reset the PCM with the HDS.

19. Do the PCM idle learn procedure (see page 11-339).

20. Turn the ignition switch OFF.

21. Wait 10 seconds.

22. Check for Temporary DTCs or DTCs with the HDS.

    *Is DTC P0563 indicated?*

    **YES**—Check for poor connections or loose terminals at PGM-FI main relay 1 and the PCM, then go to step 1.

    **NO**—Troubleshooting is complete. If any other Temporary DTCs or DTCs are indicated, go to the indicated DTC's troubleshooting.■

23. Reconnect all connectors.

24. Update the PCM if it does not have the latest software (see page 11-7), or substitute a known-good PCM (see page 11-8).

25. Check for Temporary DTCs or DTCs with the HDS.

    *Is DTC P0563 indicated?*

    **YES**—Check for poor connections or loose terminals at PGM-FI main relay 1 and the PCM. If the PCM was updated, substitute a known-good PCM (see page 11-8), then recheck. If the PCM was substituted, go to step 1.

    **NO**—If the PCM was updated, troubleshooting is complete. If the PCM was substituted, replace the original PCM (see page 11-252). If any other Temporary DTCs or DTCs are indicated, go to the indicated DTC's troubleshooting.■



BACK

Protected by AR

## **DTC P0602:** PCM Programming Error

NOTE:
- Before you troubleshoot, record all freeze data and any on-board snapshot, and review the general troubleshooting information (see page 11-3).
- This DTC is indicated when a PCM update is not completed.
- Do not turn the ignition switch OFF while updating the PCM. If you turn the ignition switch OFF before completion, the PCM can be damaged.

1. Do the PCM update procedure (see page 11-7).

2. Check for Temporary DTCs or DTCs with the HDS.

   *Is DTC P0602 indicated?*

   **YES**—Replace the original PCM (see page 11-252). ■

   **NO**—Update is complete. ■

## **DTC P0606:** PCM Processor Malfunction

NOTE: Before you troubleshoot, record all freeze data and any on-board snapshot, and review the general troubleshooting information (see page 11-3).

1. Turn the ignition switch ON (II).

2. Clear the DTC with the HDS.

3. Turn the ignition switch OFF.

4. Turn the ignition switch ON (II).

5. Wait 40 seconds.

6. Check for Temporary DTCs or DTCs with the HDS.

   *Is DTC P0606 indicated?*

   **YES**—Go to step 7.

   **NO**—Intermittent failure, the system is OK at this time. ■

7. Update the PCM if it does not have the latest software (see page 11-7), or substitute a known-good PCM (see page 11-8).

8. Turn the ignition switch OFF.

9. Turn the ignition switch ON (II).

10. Wait 40 seconds.

11. Check for Temporary DTCs or DTCs with the HDS.

    *Is DTC P0606 indicated?*

    **YES**—If the PCM was updated, substitute a known-good PCM (see page 11-8), then go to step 8. If the PCM was substituted, go to step 1.

    **NO**—If the PCM was updated, troubleshooting is complete. If the PCM was substituted, replace the original PCM (see page 11-252). If any other Temporary DTCs or DTCs are indicated, go to the indicated DTC's troubleshooting. ■

Protected by AR



## DTC Troubleshooting (cont'd)

### **DTC P060A:** PCM (A/T system) Internal Control Module Malfunction

NOTE: Before you troubleshoot, record all freeze data and any on-board snapshot, and review the general troubleshooting information (see page 11-3).

1. Turn the ignition switch ON (II).
2. Clear the DTC with the HDS.
3. Check for Temporary DTCs or DTCs with the HDS.

   *Is DTC P060A indicated?*

   **YES**—Go to step 4.

   **NO**—Intermittent failure, the system is OK at this time.■

4. Update the PCM if it does not have the latest software (see page 11-7), or substitute a known-good PCM (see page 11-8).
5. Check for Temporary DTCs or DTCs with the HDS.

   *Is DTC P060A indicated?*

   **YES**—If the PCM was updated, substitute a known-good PCM (see page 11-8), then recheck. If the PCM was substituted, go to step 1.

   **NO**—If the PCM was updated, troubleshooting is complete. If the PCM was substituted, replace the original PCM (see page 11-252). If any other Temporary DTCs or DTCs are indicated, go to the indicated DTC's troubleshooting.■

### **DTC P062F:** PCM Internal Control Module Keep Alive Memory (KAM) Error

NOTE: Before you troubleshoot, record all freeze data and any on-board snapshot, and review the general troubleshooting information (see page 11-3).

1. Turn the ignition switch ON (II).
2. Clear the DTC with the HDS.
3. Check for Temporary DTCs or DTCs with the HDS.

   *Are any Temporary DTCs or DTCs indicated?*

   **YES**—Go to step 4.

   **NO**—Intermittent failure, the system is OK at this time.■

4. Update the PCM if it does not have the latest software (see page 11-7), or substitute a known-good PCM (see page 11-8).
5. Check for Temporary DTCs or DTCs with the HDS.

   *Is DTC P062F indicated?*

   **YES**—If the PCM was updated, substitute a known-good PCM (see page 11-8), then recheck. If the PCM was substituted, go to step 1.

   **NO**—If the PCM was updated, troubleshooting is complete. If the PCM was substituted, replace the original PCM (see page 11-252). If any other Temporary DTCs or DTCs are indicated, go to the indicated DTC's troubleshooting.■



BACK

Protected by AR

## **DTC P0630:** VIN Not Programmed or Mismatch

NOTE:
- Before you troubleshoot, record all freeze data and any on-board snapshot, and review the general troubleshooting information (see page 11-3).
- This DTC is stored only when the PCM does not have the VIN information of the vehicle. Use the HDS to input the missing VIN information.

1. Turn the ignition switch ON (II).

2. Check the VIN with the HDS.

   *Does the HDS show the vehicle's VIN?*

   **YES**—Go to step 5.

   **NO**—Go to step 3.

3. Input the VIN to the PCM with the HDS.

   *Does the screen show COMPLETE?*

   **YES**—Go to step 5.

   **NO**—Go to step 4.

4. Check for DTCs with the HDS.

   *Is DTC P0603 indicated?*

   **YES**—Go to the DTC P0603 troubleshooting.■

   **NO**—Go to step 9.

5. Clear the DTC with the HDS.

6. Turn the ignition switch OFF.

7. Turn the ignition switch ON (II), and wait for 5 seconds.

8. Check for Temporary DTCs or DTCs with the HDS.

   *Is DTC P0630 indicated?*

   **YES**—Go to step 9.

   **NO**—Intermittent failure, the system is OK at this time.■

9. Update the PCM if it does not have the latest software (see page 11-7), or substitute a known-good PCM (see page 11-8).

10. Check for Temporary DTCs or DTCs with the HDS.

    *Is DTC P0630 indicated?*

    **YES**—If the PCM was updated, substitute a known-good PCM (see page 11-8), then recheck. If the PCM was substituted, go to step 1.

    **NO**—If the PCM was updated, troubleshooting is complete. If the PCM was substituted, replace the original PCM (see page 11-252). If any other Temporary DTCs or DTCs are indicated, go to the indicated DTC's troubleshooting.■

Protected by AR



## DTC Troubleshooting (cont'd)

### **DTC P0685:** PCM Power Control Circuit/ Internal Circuit Malfunction

NOTE:
- Before you troubleshoot, record all freeze data and any on-board snapshot, and review the general troubleshooting information (see page 11-3).
- If the problem doesn't return after you clear the DTC, or if this DTC is stored intermittently, check for loose terminals at the IGP line connectors before replacing the PCM.

1. Turn the ignition switch ON (II).
2. Clear the DTC with the HDS.
3. Start the engine, then let it idle for 30 seconds.
4. Turn the ignition switch OFF.
5. Start the engine, then let it idle for 30 seconds.
6. Turn the ignition switch OFF.
7. Turn the ignition switch ON (II).
8. Check for Temporary DTCs or DTCs with the HDS.

   *Is DTC P0685 indicated?*

   **YES**—Go to step 9.

   **NO**—Intermittent failure, the system is OK at this time.■

9. Update the PCM if it does not have the latest software (see page 11-7), or substitute a known-good PCM (see page 11-8).
10. Start the engine, then let it idle for 30 seconds.
11. Turn the ignition switch OFF.
12. Start the engine, then let it idle for 30 seconds.
13. Turn the ignition switch OFF.
14. Turn the ignition switch ON (II).
15. Check for Temporary DTCs or DTCs with the HDS.

    *Is DTC P0685 indicated?*

    **YES**—If the PCM was updated, substitute a known-good PCM (see page 11-8), then go to step 10. If the PCM was substituted, go to step 1.

    **NO**—If the PCM was updated, troubleshooting is complete. If the PCM was substituted, replace the original PCM (see page 11-252). If any other Temporary DTCs or DTCs are indicated, go to the indicated DTC's troubleshooting.■



BACK

Protected by AR

## **DTC P0720:** Output Shaft (Countershaft) Speed Sensor Circuit Malfunction

NOTE: Before you troubleshoot, record all freeze data and any on-board snapshot, and review the general troubleshooting information (see page 11-3).

1. Turn the ignition switch ON (II).

2. Check for Temporary DTCs or DTCs in the AT SYSTEM menu with the HDS.

   *Is DTC P0722 indicated?*

   **YES**—Troubleshoot for DTC P0722 in the AT system (see page 14-107).

   **NO**—Go to step 3.

3. Update the PCM if it does not have the latest software (see page 11-7), or substitute a known-good PCM (see page 11-8).

4. Test-drive under these conditions:

   - ECT SENSOR 1 above 176 °F (80 °C)
   - Transmission in D position
   - ENGINE SPEED between 2,000—4,500 rpm
   - Drive for several minutes, then decelerate (with throttle fully closed) for 5 seconds or more

5. Check for Temporary DTCs or DTCs in the PGM-FI SYSTEM with the HDS.

   *Is DTC P0720 indicated?*

   **YES**—Go to step 6.

   **NO**—Go to step 7.

6. Check for Temporary DTCs or DTCs in the AT SYSTEM menu with the HDS.

   *Is DTC P0722 indicated?*

   **YES**—Troubleshoot for DTC P0722 in the AT system (see page 14-107).

   **NO**— If the PCM was updated, substitute a known-good PCM (see page 11-8), then go to step 4. If the PCM was substituted, check for poor connections or loose terminals at the output shaft (countershaft) speed sensor and the PCM, then go to step 1.

7. Monitor the OBD STATUS for DTC P0720 in the DTCs MENU with the HDS.

   *Does the screen indicate PASSED?*

   **YES**—If the PCM was updated, troubleshooting is complete. If the PCM was substituted, replace the original PCM (see page 11-252).■

   **NO**—If the screen indicates FAILED, check for poor connections or loose terminals at the output shaft (countershaft) speed sensor and the PCM. If the PCM was updated, substitute a known-good PCM (see page 11-8), then go to step 4. If the PCM was substituted, go to step 1. If the screen indicates NOT COMPLETED, go to step 4.

Protected by AR



## DTC Troubleshooting (cont'd)

### DTC P1109: BARO Sensor Circuit Out of Range High

NOTE: Before you troubleshoot, record all freeze data and any on-board snapshot, and review the general troubleshooting information (see page 11-3).

1. Reset the PCM with the HDS.
2. Start the engine.
3. Check for Temporary DTCs or DTCs with the HDS.

   *Is DTC P1109 indicated?*

   **YES**—Go to step 4.

   **NO**—Intermittent failure, the system is OK at this time.■

4. Update the PCM if it does not have the latest software (see page 11-7), or substitute a known-good PCM (see page 11-8).
5. Check for Temporary DTCs or DTCs with the HDS.

   *Is DTC P1109 indicated?*

   **YES**—If the PCM was updated, substitute a known-good PCM (see page 11-8), then recheck. If the PCM was substituted, go to step 1.

   **NO**—If the PCM was updated, troubleshooting is complete. If the PCM was substituted, replace the original PCM (see page 11-252). If any other Temporary DTCs or DTCs are indicated, go to the indicated DTC's troubleshooting.■

### DTC P1116: ECT Sensor 1 Circuit Range/ Performance Problem

NOTE:
- Before you troubleshoot, record all freeze data and any on-board snapshot, and review the general troubleshooting information (see page 11-3).
- If DTC P0111 is stored at the same time as DTC P1116, troubleshoot DTC P0111 first, then recheck for DTC P1116.

1. Check for poor connections or loose terminals at ECT sensor 1 and ECT sensor 2.

   *Are the connections and terminals OK?*

   **YES**—Go to step 2.

   **NO**—Repair the connectors or terminals, then go to step 27.

2. Turn the ignition switch ON (II).
3. Check for Temporary DTCs or DTCs with the HDS.

   *Are DTC P1116 and P2183 indicated at the same time?*

   **YES**—Go to step 15.

   **NO**—Go to step 4.

4. Start the engine, and let it idle 10 minutes.
5. Check ECT SENSOR 1 in the DATA LIST with the HDS.

   *Is about 127 °F (53 °C) or less indicated?*

   **YES**—Replace ECT sensor 1 (see page 11-249), then go to step 27.

   **NO**—Go to step 6.

6. Turn the ignition switch OFF.
7. Drain the coolant (see page 10-7).
8. Remove ECT sensor 1 (see page 11-249).
9. Allow ECT sensor 1 to cool to ambient temperature.
10. Note the ambient temperature.



BACK

Protected by AR

11. Connect ECT sensor 1 to its 2P connector, but do not install it on the engine.

12. Turn the ignition switch ON (II).

13. Note the value of ECT SENSOR 1 quickly in the DATA LIST with the HDS.

14. Compare the value of ECT SENSOR 1 and the ambient temperature.

    *Does the value of ECT SENSOR 1 differ 5.4 °F (3 °C) or more?*

    **YES**—Replace ECT sensor 1 (see page 11-249), then go to step 27.

    **NO**—Intermittent failure, the system is OK at this time. Check for poor connections or loose terminals at ECT sensor 1, ECT sensor 2, and the PCM.■

15. Start the engine, and let it idle 10 minutes.

16. Check ECT SENSOR 1 in the DATA LIST with the HDS.

    *Is about 127 °F (53 °C) or less indicated?*

    **YES**—Replace ECT sensor 1 (see page 11-249), then go to step 27.

    **NO**—Go to step 17.

17. Let the engine idle 10 minutes.

18. Check ECT SENSOR 2 in the DATA LIST with the HDS.

    *Is about 124 °F (51 °C) or less indicated?*

    **YES**—Replace ECT sensor 2 (see page 11-250), then go to step 27.

    **NO**—Go to step 19.

19. Turn the ignition switch OFF.

20. Drain the coolant (see page 10-7).

21. Remove ECT sensor 1 (see page 11-249) and ECT sensor 2 (see page 11-250).

22. Allow the sensors to cool to ambient temperature.

23. Note the ambient temperature.

24. Connect ECT sensor 1 and ECT sensor 2 their 2P connector, but do not install them on the engine or the radiator.

25. Note the value of ECT SENSOR 1 and ECT SENSOR 2 quickly in the DATA LIST with the HDS.

26. Compare the value of ECT SENSOR 1 and the ambient temperature, and the value of ECT SENSOR 2 and the ambient temperature individually.

    *Does one of the sensors differ more than 5.4 °F (3 °C) from the ambient temperature?*

    **YES**—Replace the sensor that differed more than 5.4 °F (3 °C) from the ambient temperature.

    - ECT sensor 1 (see page 11-249)
    - ECT sensor 2 (see page 11-250)

    **NO**—Intermittent failure, the system is OK at this time. Check for poor connections or loose terminals at ECT sensor 1, ECT sensor 2, and the PCM.■

(cont'd)

Protected by AR



## DTC Troubleshooting (cont'd)

27. Turn the ignition switch ON (II).

28. Reset the PCM with the HDS.

29. Do the PCM idle learn procedure (see page 11-339).

30. Check for Temporary DTCs or DTCs with the HDS.

    *Is DTC P1116 indicated?*

    **YES**—Check for poor connections or loose terminals at ECT sensor 1, ECT sensor 2, and the PCM, then go to step 1.

    **NO**—Troubleshooting is complete. If any other Temporary DTCs or DTCs are indicated, go to the indicated DTC's troubleshooting. ■

### DTC P1128: MAP Sensor Signal Lower Than Expected

NOTE:
- Before you troubleshoot, record all freeze data and any on-board snapshot, and review the general troubleshooting information (see page 11-3).
- Before starting this troubleshooting check for poor connections or blockage at the air intake duct.

1. Turn the ignition switch ON (II).

2. Compare the value of the MAP SENSOR and the TURBOCHARGER BOOST SENSOR in the DATA LIST with the HDS.

   *Does the value differ more than 26.7 kpa (7.9 in.Hg, 200 mmHg)?*

   **YES**—Go to step 10.

   **NO**—Go to step 3.

3. Note the value of MAP SENSOR in the DATA LIST with the HDS.

4. Start the engine, and let it idle.

5. Check the MAP SENSOR in the DATA LIST with the HDS.

   *Does the MAP SENSOR change 0.67 kpa (0.2 in.Hg, 5 mmHg) or more?*

   **YES**—Go to step 6.

   **NO**—Go to step 10.

6. Clear the DTC with the HDS.

7. Start the engine. Hold the engine speed at 3,000 rpm without load (in Park or neutral) until the radiator fan comes on, then let it idle.

8. Test-drive under these conditions:

   - Engine speed above 1,750 rpm
   - Transmission in D position
   - REL TP SENSOR above 22 deg
   - Drive 5 seconds or more



BACK

Protected by AR

9. Monitor the OBD STATUS for DTC P1128 in the DTCs MENU with the HDS.

   *Does the screen indicate FAILED?*
   **YES**—Go to step 10.
   **NO**—If the screen indicates PASSED, intermittent failure, the system is OK at this time. Check for poor connections or loose terminals at the MAP sensor and the PCM. If the screen indicates NOT COMPLETED, go to step 7 and recheck.

10. Turn the ignition switch OFF.

11. Replace the MAP sensor (see page 11-247).

12. Turn the ignition switch ON (II).

13. Reset the PCM with the HDS.

14. Do the PCM idle learn procedure (see page 11-339).

15. Start the engine. Hold the engine speed at 3,000 rpm without load (in Park or neutral) until the radiator fan comes on, then let it idle for 10 seconds.

16. Test-drive under these conditions:

    - Engine speed above 1,750 rpm
    - Transmission in D position
    - REL TP SENSOR above 22 deg
    - Drive 5 seconds or more

17. Check for Temporary DTCs or DTCs with the HDS.

    *Is DTC P1128 indicated?*
    **YES**—Check for poor connections or loose terminals at the MAP sensor and the PCM, then go to step 1.
    **NO**—Go to step 18.

18. Monitor the OBD STATUS for DTC P1128 in the DTCs MENU with the HDS.

    *Does the screen indicate PASSED?*
    **YES**—Troubleshooting is complete. If any other Temporary DTCs or DTCs were indicated in step 17, go to the indicated DTC's troubleshooting.■
    **NO**—If the screen indicates FAILED, check for poor connections or loose terminals at the MAP sensor and the PCM, then go to step 1. If the screen indicates NOT COMPLETED, go to step 15.

## **DTC P1129:** MAP Sensor Signal Higher Than Expected

NOTE: Before you troubleshoot, record all freeze data and any on-board snapshot, and review the general troubleshooting information (see page 11-3).

1. Check for vacuum or air leaks in these parts:

   - PCV valve
   - PCV hose
   - EVAP canister purge valve
   - Throttle body
   - Intake air duct (air flow tube)
   - Intake manifold
   - Brake booster
   - Brake booster hose
   - Turbocharger
   - Intake air duct (turbocharger inlet tube and pipe)
   - Intake air duct (turbocharger outlet pipe)
   - Charge air cooler
   - Intake air duct (charge air cooler inlet hose)
   - Intake air duct (charge air cooler outlet tube)
   - Turbocharger bypass control solenoid valve
   - Pressure regulator

   *Are there any vacuum or air leaks?*

   **YES**—Repair or replace parts with vacuum or air leaks, then go to step 9.

   **NO**—Go to step 2.

2. Turn the ignition switch ON (II).

3. Compair the value of the MAP SENSOR and TURBOCHARGER BOOST SENSOR in the DATA LIST with the HDS.

   *Does the value differ more than 26.7 kPa (7.9 in.Hg, 200 mmHg)?*

   **YES**—Go to step 11.

   **NO**—Go to step 4.

(cont'd)

Protected by AR



## DTC Troubleshooting (cont'd)

4. Note the value of MAP SENSOR in the DATA LIST with the HDS.

5. Start the engine, and let it idle.

6. Check the MAP SENSOR in the DATA LIST with the HDS.

   *Does the MAP SENSOR change 0.67 kpa (0.2 in.Hg, 5 mmHg) or more?*

   **YES**—Go to step 7.

   **NO**—Go to step 11.

7. Clear the DTC with the HDS.

8. Start the engine. Hold the engine speed at 3000 rpm without load (in Park or neutral) until the radiator fan comes on, then let it idle.

9. Test-drive under these conditions:

   - Engine speed above 1,750 rpm
   - Transmission in D position
   - REL TP SENSOR above 22 deg
   - Drive 5 seconds or more

10. Monitor the OBD STATUS for DTC P1129 in the DTCs MENU with the HDS.

    *Does the screen indicate FAILED?*

    **YES**—Go to step 1.

    **NO**—If the screen indicates PASSED, intermittent failure, the system is OK at this time. Check for poor connections or loose terminals at the MAP sensor and the PCM. If the screen indicates NOT COMPLETED, go to step 5 and recheck.

11. Turn the ignition switch OFF.

12. Replace the MAP sensor (see page 11-247).

13. Turn the ignition switch ON (II).

14. Reset the PCM with the HDS.

15. Do the PCM idle learn procedure (see page 11-339).

16. Start the engine. Hold the engine speed at 3,000 rpm without load (in Park or neutral) until the radiator fan comes on, then let it idle.

17. Test-drive under these conditions:

    - Engine speed above 1,750 rpm
    - Transmission in D position
    - REL TP SENSOR above 22 deg
    - Drive 5 seconds or more

18. Check for Temporary DTCs or DTCs with the HDS.

    *Is DTC P1129 indicated?*

    **YES**—Check for poor connections or loose terminals at the MAP sensor and the PCM, then go to step 1.

    **NO**—Go to step 19.

19. Monitor the OBD STATUS for DTC P1129 in the DTCs MENU with the HDS.

    *Does the screen indicate PASSED?*

    **YES**—Troubleshooting is complete. If any other Temporary DTCs or DTCs were indicated in step 18, go to the indicated DTC's troubleshooting. ■

    **NO**—If the screen indicates FAILED, check for poor connections or loose terminals at the MAP sensor and the PCM, then go to step 1. If the screen indicates NOT COMPLETED, go to step 16.



BACK

Protected by AR

## DTC P1157: A/F Sensor (Sensor 1) AFS Circuit Malfunction

NOTE: Before you troubleshoot, record all freeze data and any on-board snapshot, and review the general troubleshooting information (see page 11-3).

1. Turn the ignition switch ON (II).
2. Clear the DTC with the HDS.
3. Start the engine, and wait 1 minute.
4. Check for Temporary DTCs or DTCs with the HDS.

   *Is DTC P1157 indicated?*

   **YES**—Go to step 5.

   **NO**—Intermittent failure, the system is OK at this time. Check for poor connections or loose terminals at the A/F sensor (Sensor 1) and the PCM. ■
5. Turn the ignition switch OFF.
6. Jump the SCS line with the HDS.
7. Disconnect the A/F sensor (Sensor 1) 4P connector.
8. Disconnect PCM connector C (44P).
9. Connect A/F sensor (Sensor 1) 4P connector terminals No. 1 and No. 2 with a jumper wire.

**A/F SENSOR (SENSOR 1) 4P CONNECTOR**

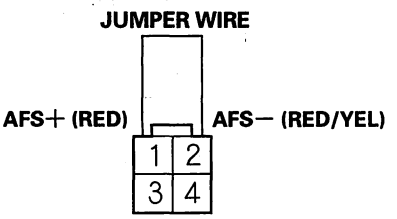


Wire side of female terminals

10. Check for continuity between PCM connector terminals C29 and C30.

**PCM CONNECTOR C (44P)**

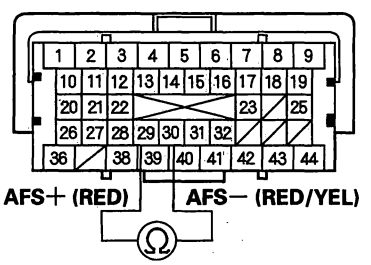


Terminal side of female terminals

*Is there continuity?*

**YES**—Go to step 14.

**NO**—Go to step 11.

11. Remove the jumper wire from the A/F sensor (Sensor 1) 4P connector.

(cont'd)

Protected by AR



## DTC Troubleshooting (cont'd)

12. Connect A/F sensor (Sensor 1) 4P connector terminal No. 1 to body ground with a jumper wire.

**A/F SENSOR (SENSOR 1) 4P CONNECTOR**

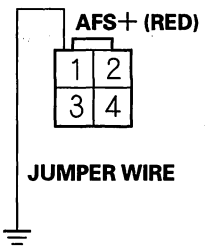


Wire side of female terminals

13. Check for continuity between PCM connector terminal C29 and body ground.

**PCM CONNECTOR C (44P)**

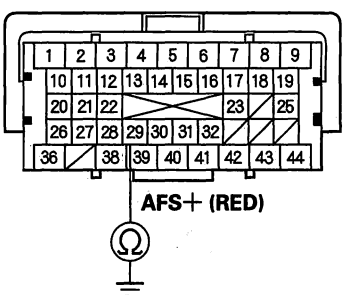


Terminal side of female terminals

*Is there continuity?*

**YES**—Repair open in the wire between the PCM (C30) and the A/F sensor (Sensor 1), then go to step 15.

**NO**—Repair open in the wire between the PCM (C29) and the A/F sensor (Sensor 1), then go to step 15.

14. Replace the A/F sensor (Sensor 1) (see page 11-245).

15. Reconnect all connectors.

16. Turn the ignition switch ON (II).

17. Reset the PCM with the HDS.

18. Do the PCM idle learn procedure (see page 11-339).

19. Check for Temporary DTCs or DTCs with the HDS.

*Is DTC P1157 indicated?*

**YES**—Check for poor connections or loose terminals at the A/F sensor (Sensor 1) and the PCM, then go to step 1. If the connector and terminal fits are OK, go to step 21.

**NO**—Go to step 20.

20. Monitor the OBD STATUS for DTC P1157 in the DTCs MENU with the HDS.

*Does the screen indicate PASSED?*

**YES**—Troubleshooting is complete. If any other Temporary DTCs or DTCs were indicated in step 19, go to the indicated DTC's troubleshooting.■

**NO**—If the screen indicates FAILED, check for poor connections or loose terminals at the A/F sensor (Sensor 1) and the PCM, then go to step 1. If the screen indicates NOT COMPLETED, keep idling until a result comes on.



BACK

Protected by AR

21. Update the PCM if it does not have the latest software (see page 11-7), or substitute a known-good PCM (see page 11-8).

22. Start the engine, and let it idle.

23. Check for Temporary DTCs or DTCs with the HDS.

    *Is DTC P1157 indicated?*

    **YES**—If the PCM was updated, substitute a known-good PCM (see page 11-8), then go to step 22. If the PCM was substituted, go to step 1.

    **NO**—Go to step 24.

24. Monitor the OBD STATUS for DTC P1157 in the DTCs MENU with the HDS.

    *Does the screen indicate PASSED?*

    **YES**—If the PCM was updated, troubleshooting is complete. If the PCM was substituted, replace the original PCM (see page 11-252). If any other Temporary DTCs or DTCs were indicated in step 23, go to the indicated DTC's troubleshooting. ■

    **NO**—If the screen indicates FAILED, go to step 1. If the PCM was updated, substitute a known-good PCM (see page 11-8), then go to step 22. If the PCM was substituted, go to step 1. If the screen indicates NOT COMPLETED, keep idling until a result comes on.

Protected by AR



## DTC Troubleshooting (cont'd)

### DTC P1172: A/F Sensor (Sensor 1) Circuit Out of Range High

NOTE: Before you troubleshoot, record all freeze data and any on-board snapshot, and review the general troubleshooting information (see page 11-3).

1. Turn the ignition switch ON (II).
2. Clear the DTC with the HDS.
3. Start the engine. Hold the engine speed at 3,000 rpm without load (in Park or neutral) until the radiator fan comes on, then let it idle.
4. Monitor the OBD STATUS for DTC P1172 in the DTCs MENU with the HDS.

   *Does the screen indicate FAILED?*

   **YES**—Go to step 5.

   **NO**—If the screen indicates PASSED, intermittent failure, the system is OK at this time. Check for poor connections or loose terminals at the A/F sensor (Sensor 1) and the PCM. If the screen indicates EXECUTING or OUT OF CONDITION, keep idling until a result comes on.
5. Turn the ignition switch OFF.
6. Replace the A/F sensor (Sensor 1) (see page 11-245).
7. Turn the ignition switch ON (II).
8. Reset the PCM with the HDS.
9. Do the PCM idle learn procedure (see page 11-339).
10. Start the engine. Hold the engine speed at 3,000 rpm without load (in Park or neutral) until the radiator fan comes on, then let it idle.
11. Check for Temporary DTCs or DTCs with the HDS.

    *Is DTC P1172 indicated?*

    **YES**—Check for poor connections or loose terminals at the A/F sensor (Sensor 1) and the PCM, then go to step 1.

    **NO**—Go to step 12.
12. Monitor the OBD STATUS for DTC P1172 in the DTCs MENU with the HDS.

    *Does the screen indicate PASSED?*

    **YES**—Troubleshooting is complete. If any other Temporary DTCs or DTCs were indicated in step 11, go to the indicated DTC's troubleshooting. ■

    **NO**—If the screen indicates FAILED, check for poor connections or loose terminals at the A/F sensor (Sensor 1) and the PCM, then go to step 1. If the screen indicates EXECUTING, keep idling until a result comes on. If the screen indicates OUT OF CONDITION, go to step 10.



BACK

Protected by AR

## DTC P1297: ELD Circuit Low Voltage

NOTE: Before you troubleshoot, record all freeze data and any on-board snapshot, and review the general troubleshooting information (see page 11-3).

1. Turn the ignition switch ON (II).
2. Check the ELD in the DATA LIST with the HDS.

   *Is 72 A or more indicated?*

   **YES**—Go to step 3.

   **NO**—Intermittent failure, the system is OK at this time. Check for poor connections or loose terminals at the ELD and the PCM. ■
3. Turn the ignition switch OFF.
4. Disconnect the ELD 3P connector.
5. Turn the ignition switch ON (II).
6. Check the ELD in the DATA LIST with the HDS.

   *Is 72 A or more indicated?*

   **YES**—Go to step 7.

   **NO**—Go to step 11.
7. Turn the ignition switch OFF.
8. Jump the SCS line with the HDS.
9. Disconnect PCM connector A (44P).
10. Check for continuity between PCM connector terminal A23 and body ground.

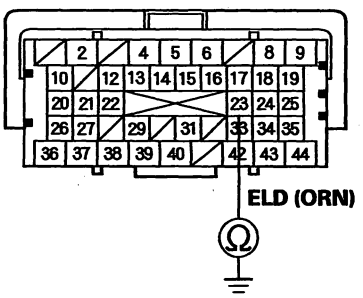


Terminal side of female terminals

   *Is there continuity?*

   **YES**—Repair short in the wire between the PCM (A23) and the ELD, then go to step 13.

   **NO**—Go to step 20.
11. Turn the ignition switch OFF.
12. Replace the ELD (see page 11-251).
13. Reconnect all connectors.
14. Turn the ignition switch ON (II).
15. Reset the PCM with the HDS.
16. Do the PCM idle learn procedure (see page 11-339).
17. Start the engine, and let it idle.
18. Turn on the headlights.
19. Check for Temporary DTCs or DTCs with the HDS.

   *Is DTC P1297 indicated?*

   **YES**—Check for poor connections or loose terminals at the ELD and the PCM, then go to step 1.

   **NO**—Troubleshooting is complete. If any other Temporary DTCs or DTCs are indicated, go to the indicated DTC's troubleshooting. ■

(cont'd)

Protected by AR



## DTC Troubleshooting (cont'd)

20. Reconnect all connectors.

21. Update the PCM if it does not have the latest software (see page 11-7), or substitute a known-good PCM (see page 11-8).

22. Start the engine, and let it idle.

23. Turn on the headlights.

24. Check for Temporary DTCs or DTCs with the HDS.

    *Is DTC P1297 indicated?*

    **YES**—Check for poor connections or loose terminals at the ELD and the PCM. If the PCM was updated, substitute a known-good PCM (see page 11-8), then go to step 22. If the PCM was substituted, go to step 1.

    **NO**—If the PCM was updated, troubleshooting is complete. If the PCM was substituted, replace the original PCM (see page 11-252). If any other Temporary DTCs or DTCs are indicated, go to the indicated DTC's troubleshooting.■



BACK

Protected by AR

## DTC P1298: ELD Circuit High Voltage

NOTE: Before you troubleshoot, record all freeze data and any on-board snapshot, and review the general troubleshooting information (see page 11-3).

1. Turn the ignition switch ON (II).
2. Check the ELD in the DATA LIST with the HDS.

   *Is 0.2 A or less indicated?*

   **YES**—Go to step 3.

   **NO**—Intermittent failure, the system is OK at this time. Check for poor connections or loose terminals at the ELD and the PCM. ■

3. Turn the ignition switch OFF.
4. Disconnect the ELD 3P connector.
5. Turn the ignition switch ON (II).
6. Measure voltage between ELD 3P connector terminal No. 1 and body ground.

**ELD 3P CONNECTOR**

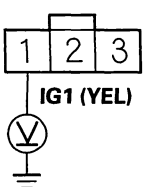


Wire side of female terminals

*Is there battery voltage?*

**YES**—Go to step 7.

**NO**—Check the No. 3 IG1 ACG (15 A) fuse in the under-dash fuse/relay box. If the fuse is OK, repair open in the wire between the No. 3 IG1 ACG (15 A) fuse and the ELD, then go to step 12.

7. Jump the SCS line with the HDS.
8. Disconnect PCM connector A (44P).
9. Check for continuity between ELD 3P connrctor terminal No. 3 and PCM connector terminal A23.

**ELD 3P CONNECTOR**

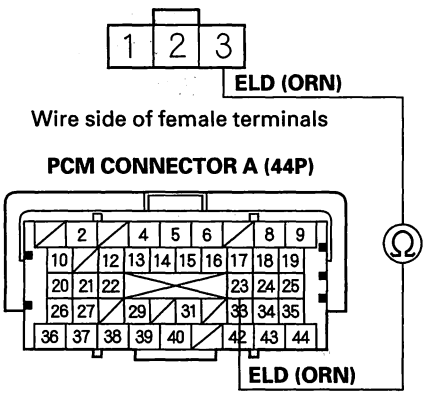


Wire side of female terminals

Terminal side of female terminals

*Is there continuity?*

**YES**—Go to step 10.

**NO**—Repair open in the wire between the PCM (A23) and the ELD, then go to step 12.

(cont'd)

Protected by AR



## DTC Troubleshooting (cont'd)

10. Check for continuity between ELD 3P connector terminal No. 2 and body ground.

**ELD 3P CONNECTOR**

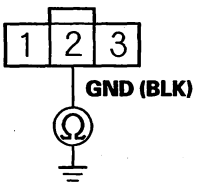


Wire side of female terminals

*Is there continuity?*

**YES**—Go to step 11.

**NO**—Repair open in the wire between the ELD and G202 (see page 22-22), then go to step 12.

11. Replace the ELD (see page 11-251).

12. Reconnect all connectors.

13. Turn the ignition switch ON (II).

14. Reset the PCM with the HDS.

15. Do the PCM idle learn procedure (see page 11-339).

16. Check for Temporary DTCs or DTCs with the HDS.

*Is DTC P1298 indicated?*

**YES**—Go to step 17.

**NO**—Troubleshooting is complete. If any other Temporary DTCs or DTCs are indicated, go to the indicated DTC's troubleshooting.■

17. Update the PCM if it does not have the latest software (see page 11-7), or substitute a known-good PCM (see page 11-8).

18. Check for Temporary DTCs or DTCs with the HDS.

*Is DTC P1298 indicated?*

**YES**—Check for poor connections or loose terminals at the ELD and the PCM. If the PCM was updated, substitute a known-good PCM (see page 11-8), then recheck. If the PCM was substituted, go to step 1.

**NO**—If the PCM was updated, troubleshooting is complete. If the PCM was substituted, replace the original PCM (see page 11-252). If any other Temporary DTCs or DTCs are indicated, go to the indicated DTC's troubleshooting.■



BACK

Protected by AR

## **DTC P1549:** Charging System High Voltage

NOTE:
- Before you troubleshoot, record all freeze data and any on-board snapshot, and review the general troubleshooting information (see page 11-3).
- If a high voltage battery (24 V, etc.) is connected to the vehicle, this DTC can be stored.

1. Turn the ignition switch ON (II).
2. Clear the DTC with the HDS.
3. Start the engine.
4. Check under these conditions:
   - A/C off
   - Headlights off
   - Rear window defogger off
5. Hold the engine speed at 2,000 rpm (in Park or neutral) for 1 minute.
6. Check for Temporary DTCs or DTCs with the HDS.

   *Is DTC P1549 indicated?*

   **YES**—Replace the alternator (see page 4-34), then go to step 7.

   **NO**—Intermittent failure, the system is OK at this time. Check for poor connections or loose terminals at the alternator and the under-hood fuse/relay box.■
7. Turn the ignition switch ON (II).
8. Reset the PCM with the HDS.
9. Do the PCM idle learn procedure (see page 11-339).
10. Start the engine.
11. Check under these conditions:
    - A/C off
    - Headlights off
    - Rear window defogger off
12. Hold the engine speed at 2,000 rpm (in Park or neutral) for 1 minute.
13. Check for Temporary DTCs or DTCs with the HDS.

    *Is DTC P1549 indicated?*

    **YES**—Check for poor connections or loose terminals at the alternator and the under-hood fuse/relay box, then go to step 1.

    **NO**—Troubleshooting is complete. If any other Temporary DTCs or DTCs are indicated, go to the indicated DTC's troubleshooting.■

Protected by AR



## DTC Troubleshooting (cont'd)

### DTC P16BB: Alternator B Terminal Circuit Low Voltage

NOTE: Before you troubleshoot, record all freeze data and any on-board snapshot, and review the general troubleshooting information (see page 11-3).

1. Turn the ignition switch ON (II).
2. Clear the DTC with HDS.
3. Start the engine.
4. Check under these conditions:
   - A/C on
   - Temperature control at maximum cool
   - Blower fan at maximum speed
   - Rear window defogger on
   - Headlights on high beam
5. Hold the engine speed at 2,000 rpm (in Park or neutral) for 1 minute.
6. Check for Temporary DTCs or DTCs with the HDS.

   *Is DTC P16BB indicated?*

   **YES**—Go to step 7.

   **NO**—Intermittent failure, the system is OK at this time. Check for poor connections or loose terminals at the alternator and the under-hood fuse/relay box, and check the battery performance (see page 22-63).■
7. Check for poor connections or loose terminals at the alternator and the under-hood fuse/relay box (+B line).

   *Are the connections and terminals OK?*

   **YES**—Go to step 8.

   **NO**—Repair the connectors or terminals, then go to step 9.
8. Check for an open in the wire (+B line) between the alternator and under-hood fuse/relay box.

   *Is the harness OK?*

   **YES**—Replace the alternator (see page 4-34), then go to step 9.

   **NO**—Repair open in the wire (+B line) between the alternator and the under-hood fuse/relay box, then go to step 9.
9. Turn the ignition switch ON (II).
10. Reset the PCM with the HDS.
11. Do the PCM idle learn procedure (see page 11-339).
12. Start the engine.
13. Check under these conditions:
    - A/C on
    - Temperature control at maximum cool
    - Blower fan at maximum speed
    - Rear window defogger on
    - Headlights on high beam
14. Hold the engine speed at 2,000 rpm (in Park or neutral) for 1 minute.
15. Check for Temporary DTCs or DTCs with the HDS.

    *Is DTC P16BB indicated?*

    **YES**—Check for poor connections or loose terminals at the alternator and the under-hood fuse/relay box, then go to step 1.

    **NO**—Troubleshooting is complete. If any other Temporary DTCs or DTCs are indicated, go to the indicated DTC's troubleshooting.■



BACK

Protected by AR

## **DTC P16BC:** Alternator FR Terminal Circuit/ IGP Circuit Low Voltage

NOTE: Before you troubleshoot, record all freeze data and any on-board snapshot, and review the general troubleshooting information (see page 11-3).

1. Check for poor connections or loose terminals at the alternator 4P connector.

   *Are the connections and terminals OK?*

   **YES**—Go to step 2.

   **NO**—Repair the connector or terminals, then go to step 18.

2. Check the alternator mounting surface for corrosion.

   *Is the mounting surface corroded?*

   **YES**—Remove the alternator (see page 4-34). Clean all mounting surfaces, reinstall the alternator, then go to step 18.

   **NO**—Go to step 3.

3. Turn the ignition switch ON (II).

4. Clear the DTC with the HDS.

5. Start the engine.

6. Check under these conditions:

   - A/C on
   - Temperature control at maximum cool
   - Blower fan at maximum speed
   - Rear window defogger on
   - Headlights on high beam

7. Hold the engine speed 2,000 rpm (in Park or neutral) for 1 minute.

8. Check for Temporary DTCs or DTCs with the HDS.

   *Is DTC P16BC indicated?*

   **YES**—Go to step 9.

   **NO**—Intermittent failure, the system is OK at this time. Check for poor connections or loose terminals at the alternator. ■

9. Turn the ignition switch OFF.

10. Disconnect the alternator 4P connector.

11. Turn the ignition switch ON (II).

12. Measure voltage between alternator 4P connector terminal No. 1 and body ground.

**ALTERNATOR 4P CONNECTOR**

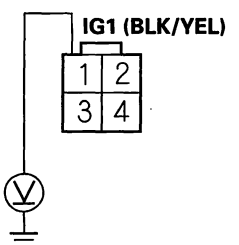


Wire side of female terminals

*Is there battery voltage?*

**YES**—Go to step 13.

**NO**—Repair open in the wire between the alternator (IG1 line) and the No. 3 IG1 ACG (15 A) fuse in the under-dash fuse/relay box, then go to step 18.

(cont'd)

Protected by AR



## DTC Troubleshooting (cont'd)

13. Measure voltage between alternator 4P connector terminal No. 4 and body ground.

**ALTERNATOR 4P CONNECTOR**

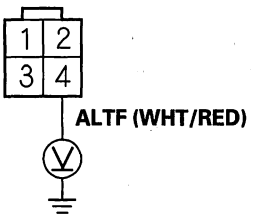


Wire side of female terminals

*Is there about 5 V?*

**YES**—Replace the alternator (see page 4-34), then go to step 18.

**NO**—Go to step 14.

14. Turn the ignition switch OFF.

15. Jump the SCS line with the HDS.

16. Disconnect PCM connector B (44P).

17. Check for continuity between alternator 4P connector terminal No. 4 and PCM connector terminal B43.

**ALTERNATOR 4P CONNECTOR**

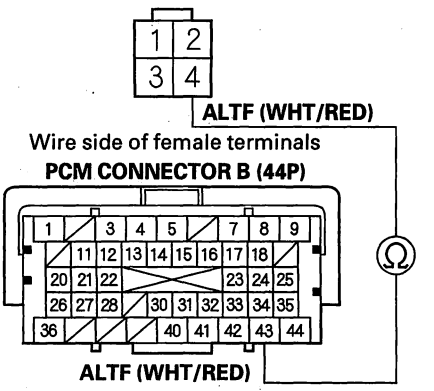


Terminal side of female terminals

*Is there continuity?*

**YES**—Go to step 27.

**NO**—Repair open in the wire between the PCM (B43) and the alternator, then go to step 18.

18. Turn the ignition switch OFF.

19. Reconnect all connectors.

20. Turn the ignition switch ON (II).

21. Reset the PCM with the HDS.

22. Do the PCM idle learn procedure (see page 11-339).

23. Start the engine.

24. Check under these conditions:

- A/C on
- Temperature control at maximum cool
- Blower fan at maximum speed
- Rear window defogger on
- Headlights on high beam



BACK

Protected by AR

25. Hold the engine speed 2,000 rpm (in Park or neutral) for 1 minute.

26. Check for Temporary DTCs or DTCs with the HDS.

    *Is DTC P16BC indicated?*

    **YES**—Check for poor connections or loose terminals at the alternator and the PCM, then go to step 1.

    **NO**—Troubleshooting is complete. If any other Temporary DTCs or DTCs are indicated, go to the indicated DTC's troubleshooting.■

27. Reconnect all connectors.

28. Update the PCM if it does not have the latest software (see page 11-7), or substitute a known-good PCM (see page 11-8).

29. Start the engine.

30. Check under these conditions:

    - A/C on
    - Temperature control at maximum cool
    - Blower fan at maximum speed
    - Rear window defogger on
    - Headlights on high beam

31. Hold the engine speed 2,000 rpm (in Park or neutral) for 1 minute.

32. Check for Temporary DTCs or DTCs with the HDS.

    *Is DTC P16BC indicated?*

    **YES**—Check for poor connections or loose terminals at the alternator and the PCM. If the PCM was updated, substitute a known-good PCM (see page 11-8), then go to step 29. If the PCM was substituted, go to step 1.

    **NO**—If the PCM was updated, troubleshooting is complete. If the PCM was substituted, replace the original PCM (see page 11-252). If any other Temporary DTCs or DTCs are indicated, go to the indicated DTC's troubleshooting.■

Protected by AR



## DTC Troubleshooting (cont'd)

### DTC P2183: ECT Sensor 2 Circuit Range/ Performance Problem

NOTE: Before you troubleshoot, record all freeze data and any on-board snapshot, and review the general troubleshooting information (see page 11-3).

1. Check for poor connections or loose terminals at ECT sensor 1 and ECT sensor 2.

   *Are the connections and terminals OK?*

   **YES**—Go to step 2.

   **NO**—Repair the connectors or terminals, then go to step 27.

2. Turn the ignition switch ON (II).

3. Check for Temporary DTCs or DTCs with the HDS.

   *Are DTC P1116 and P2183 indicated at the same time?*

   **YES**—Go to step 15.

   **NO**—Go to step 4.

4. Start the engine, and let it idle 10 minutes.

5. Check ECT SENSOR 2 in the DATA LIST with the HDS.

   *Is about 124 °F (51 °C) or less indicated?*

   **YES**—Replace ECT sensor 2 (see page 11-250), then go to step 27.

   **NO**—Go to step 6.

6. Turn the ignition switch OFF.

7. Drain the coolant (see page 10-7).

8. Remove ECT sensor 2 (see page 11-250).

9. Allow ECT sensor 2 to cool to ambient temperature.

10. Note the ambient temperature.

11. Connect ECT sensor 2 to its 2P connector, but do not install it in the radiator.

12. Turn the ignition switch ON (II).

13. Note the value of ECT SENSOR 2 quickly in the DATA LIST with the HDS.

14. Compare the value of ECT SENSOR 2 and the ambient temperature.

    *Does ECT SENSOR 2 differ 5.4 °F (3 °C) or more?*

    **YES**—Replace ECT sensor 2 (see page 11-250), then go to step 27.

    **NO**—Intermittent failure, the system is OK at this time. Check for poor connections or loose terminals at ECT sensor 1, ECT sensor 2, and the PCM. ■

15. Start the engine, and let it idle 10 minutes.

16. Check ECT SENSOR 1 in the DATA LIST with the HDS.

    *Is about 127 °F (53 °C) or less indicated?*

    **YES**—Replace ECT sensor 1 (see page 11-249), then go to step 27.

    **NO**—Go to step 17.

17. Let the engine idle 10 minutes.

18. Check ECT SENSOR 2 in the DATA LIST with the HDS.

    *Is about 124 °F (51 °C) or less indicated?*

    **YES**—Replace ECT sensor 2 (see page 11-250), then go to step 27.

    **NO**—Go to step 19.



BACK

Protected by AR

19. Turn the ignition switch OFF.

20. Drain the coolant (see page 10-7).

21. Remove ECT sensor 1 (see page 11-249) and ECT sensor 2 (see page 11-250).

22. Allow the sensors to cool to ambient temperature.

23. Note the ambient temperature.

24. Connect ECT sensor 1 and ECT sensor 2 to their 2P connector, but do not install them on the engine or the radiator.

25. Note the value of ECT SENSOR 1 and ECT SENSOR 2 quickly in the DATA LIST with the HDS.

26. Compare the value of ECT SENSOR 1 and the ambient temperature, and the value of ECT SENSOR 2 and the ambient temperature individually.

    *Does one of the sensors differ more than 5.4 °F (3 °C) from the ambient temperature?*

    **YES**—Replace the sensor that differed more than 5.4 °F (3 °C) from the ambient temperature.

    - ECT sensor 1 (see page 11-249)
    - ECT sensor 2 (see page 11-250)

    After replacing the sensor, go to step 27.

    **NO**—Intermittent failure, the system is OK at this time. Check for poor connections or loose terminals at ECT sensor 1, ECT sensor 2, and the PCM.■

27. Turn the ignition switch ON (II).

28. Reset the PCM with the HDS.

29. Do the PCM idle learn procedure (see page 11-339).

30. Check for Temporary DTCs or DTCs with the HDS.

    *Is DTC P2183 indicated?*

    **YES**—Check for poor connections or loose terminals at ECT sensor 1, ECT sensor 2, and the PCM, then go to step 1.

    **NO**—Troubleshooting is complete. If any other Temporary DTCs or DTCs are indicated, go to the indicated DTC's troubleshooting.■

Protected by AR



## DTC Troubleshooting (cont'd)

### DTC P2184: ECT Sensor 2 Circuit Low Voltage

NOTE: Before you troubleshoot, record all freeze data and any on-board snapshot, and review the general troubleshooting information (see page 11-3).

1. Turn the ignition switch ON (II).
2. Check ECT SENSOR 2 in the DATA LIST with the HDS.

   *Is about 356 °F (180 °C) or more, or 0.08 V or less indicated?*

   **YES**—Go to step 3.

   **NO**—Intermittent failure, the system is OK at this time. Check for poor connections or loose terminals at ECT sensor 2 and the PCM. ■
3. Turn the ignition switch OFF.
4. Disconnect the ECT sensor 2 2P connector.
5. Turn the ignition switch ON (II).
6. Check ECT SENSOR 2 in the DATA LIST with the HDS.

   *Is about 356 °F (180 °C) or more, or 0.08 V or less indicated?*

   **YES**—Go to step 7.

   **NO**—Go to step 11.
7. Turn the ignition switch OFF.
8. Jump the SCS line with the HDS.
9. Disconnect PCM connector A (44P).
10. Check for continuity between ECT sensor 2 2P connector terminal No. 1 and body ground.

**ECT SENSOR 2 2P CONNECTOR**

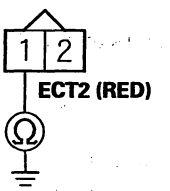


Wire side of female terminals

*Is there continuity?*

**YES**—Repair short in the wire between ECT sensor 2 and the PCM (A33), then go to step 13.

**NO**—Go to step 18.

11. Turn the ignition switch OFF.
12. Replace ECT sensor 2 (see page 11-250).
13. Reconnect all connectors.
14. Turn the ignition switch ON (II).
15. Reset the PCM with the HDS.
16. Do the PCM idle learn procedure (see page 11-339).
17. Check for Temporary DTCs or DTCs with the HDS.

    *Is DTC P2184 indicated?*

    **YES**—Check for poor connections or loose terminals at ECT sensor 2 and the PCM, then go to step 1.

    **NO**—Troubleshooting is complete. If any other Temporary DTCs or DTCs are indicated, go to the indicated DTC's troubleshooting. ■



BACK

Protected by AR

18. Reconnect all connectors.

19. Update the PCM if it does not have the latest software (see page 11-7), or substitute a known-good PCM (see page 11-8).

20. Check for Temporary DTCs or DTCs with the HDS.

    *Is DTC P2184 indicated?*

    **YES**—Check for poor connections or loose terminals at ECT sensor 2 and the PCM. If the PCM was updated, substitute a known-good PCM (see page 11-8), then recheck. If the PCM was substituted, go to step 1.

    **NO**—If the PCM was updated, troubleshooting is complete. If the PCM was substituted, replace the original PCM (see page 11-252). If any other Temporary DTCs or DTCs are indicated, go to the indicated DTC's troubleshooting. ■

Protected by AR



## DTC Troubleshooting (cont'd)

### DTC P2185: ECT Sensor 2 Circuit High Voltage

NOTE: Before you troubleshoot, record all freeze data and any on-board snapshot, and review the general troubleshooting information (see page 11-3).

1. Turn the ignition switch ON (II).
2. Check ECT SENSOR 2 in the DATA LIST with the HDS.

   *Is about −40 °F (−40 °C) or less, or 4.90 V or more indicated?*

   **YES**—Go to step 3.

   **NO**—Intermittent failure, the system is OK at this time. Check for poor connections or loose terminals at ECT sensor 2 and the PCM. ■
3. Turn the ignition switch OFF.
4. Disconnect the ECT sensor 2 2P connector.
5. Connect ECT sensor 2 2P connector terminals No. 1 and No. 2 with a jumper wire.

**ECT SENSOR 2 2P CONNECTOR**

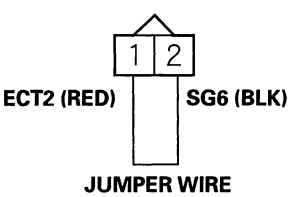


Wire side of female terminals

6. Turn the ignition switch ON (II).
7. Check ECT SENSOR 2 in the DATA LIST with the HDS.

   *Is about −40 °F (−40 °C) or less, or 4.90 V or more indicated?*

   **YES**—Go to step 8.

   **NO**—Go to step 20.
8. Turn the ignition switch OFF.
9. Remove the jumper wire from the ECT sensor 2 2P connector.
10. Turn the ignition switch ON (II).
11. Measure voltage between ECT sensor 2 2P connector terminal No. 1 and body ground.

**ECT SENSOR 2 2P CONNECTOR**

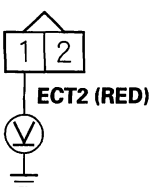


Wire side of female terminals

*Is there about 5 V?*

**YES**—Go to step 12.

**NO**—Go to step 16.



BACK

Protected by AR

12. Turn the ignition switch OFF.

13. Jump the SCS line with the HDS.

14. Disconnect PCM connector A (44P).

15. Check for continuity between ECT sensor 2 2P connector terminal No. 2 and PCM connector terminal A9.

**ECT SENSOR 2 2P CONNECTOR**

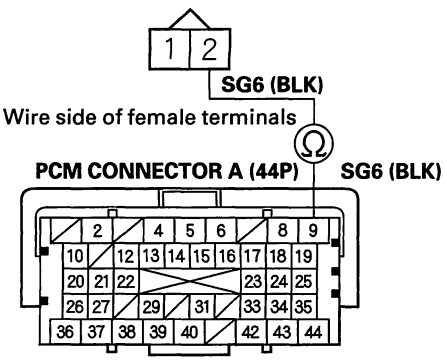


*Is there continuity?*

**YES**—Go to step 27.

**NO**—Repair open in the wire between the PCM (A9) and ECT sensor 2, then go to step 22.

16. Turn the ignition switch OFF.

17. Jump the SCS line with the HDS.

18. Disconnect PCM connector A (44P).

19. Check for continuity between ECT sensor 2 2P connector terminal No. 1 and PCM connector terminal A33.

**ECT SENSOR 2 2P CONNECTOR**

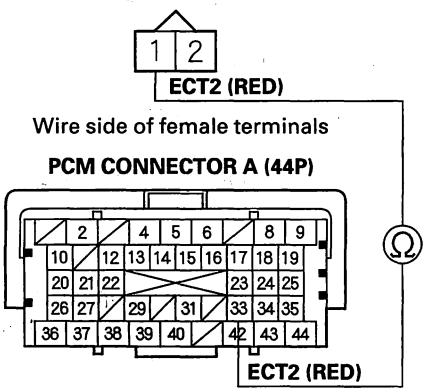


*Is there continuity?*

**YES**—Go to step 27.

**NO**—Repair open in the wire between the PCM (A33) and ECT sensor 2, then go to step 22.

(cont'd)

Protected by AR



## DTC Troubleshooting (cont'd)

20. Turn the ignition switch OFF.

21. Replace ECT sensor 2 (see page 11-250).

22. Reconnect all connectors.

23. Turn the ignition switch ON (II).

24. Reset the PCM with the HDS.

25. Do the PCM idle learn procedure (see page 11-339).

26. Check for Temporary DTCs or DTCs with the HDS.

    *Is DTC P2185 indicated?*

    **YES**—Check for poor connections or loose terminals at ECT sensor 2 and the PCM, then go to step 1.

    **NO**—Troubleshooting is complete. If any other Temporary DTCs or DTCs are indicated, go to the indicated DTC's troubleshooting.■

27. Reconnect all connectors.

28. Update the PCM if it does not have the latest software (see page 11-7), or substitute a known-good PCM (see page 11-8).

29. Check for Temporary DTCs or DTCs with the HDS.

    *Is DTC P2185 indicated?*

    **YES**—Check for poor connections or loose terminals at ECT sensor 2 and the PCM. If the PCM was updated, substitute a known-good PCM (see page 11-8), then recheck. If the PCM was substituted, go to step 1.

    **NO**—If the PCM was updated, troubleshooting is complete. If the PCM was substituted, replace the original PCM (see page 11-252). If any other Temporary DTCs or DTCs are indicated, go to the indicated DTC's troubleshooting.■



BACK

Protected by AR

## DTC P2195: A/F Sensor (Sensor 1) Signal Stuck Lean

NOTE:
- Before you troubleshoot, record all freeze data and any on-board snapshot, and review the general troubleshooting information (see page 11-3).
- If the vehicle was out of fuel and the engine stalled before this DTC was stored, refuel and clear the DTC with the HDS.
- If DTC P2101, P2118, P2135, P2138, P2176 or a combination of P2122 and P2127, P2122 and P2138, or P2127 and P2138 is stored at the same time, troubleshoot them first, then recheck for DTC P2195.

1. Check the installation of the A/F sensor (Sensor 1).

   *Is the A/F sensor loose or disconnected from the warm up TWC?*

   **YES**—Go to step 6.

   **NO**—Go to step 2.

2. Turn the ignition switch ON (II).

3. Clear the DTC with the HDS.

4. Start the engine, and let it idle for 2 minutes.

5. Check for Temporary DTCs or DTCs with the HDS.

   *Is DTC P2195 indicated?*

   **YES**—Check for poor connections or loose terminals at the A/F sensor (Sensor 1) and the PCM, then go to step 13.

   **NO**—Intermittent failure, the system is OK at this time. Check for poor connections or loose terminals at the A/F sensor (Sensor 1) and the PCM. If any other Temporary DTCs or DTCs are indicated, go to the indicated DTC's troubleshooting.■

6. Turn the ignition switch OFF.

7. Reinstall the A/F sensor (Sensor 1) (see page 11-245).

8. Turn the ignition switch ON (II).

9. Reset the PCM with the HDS.

10. Do the PCM idle learn procedure (see page 11-339).

11. Check for Temporary DTCs or DTCs with the HDS.

    *Is DTC P2195 indicated?*

    **YES**—Check for poor connections or loose terminals at the A/F sensor (Sensor 1) and the PCM, then go to step 1.

    **NO**—Go to step 12.

12. Monitor the OBD STATUS for DTC P2195 in the DTCs MENU with the HDS.

    *Does the screen indicate PASSED?*

    **YES**—Troubleshooting is complete. If any other Temporary DTCs or DTCs were indicated in step 11, go to the indicated DTC's troubleshooting.■

    **NO**—If the screen indicates FAILED, check for poor connections or loose terminals at the A/F sensor (Sensor 1) and the PCM, then go to step 1. If the screen indicated NOT COMPLETED, keep idling until a result comes on.

(cont'd)

Protected by AR



## DTC Troubleshooting (cont'd)

13. Update the PCM if it does not have the latest software (see page 11-7), or substitute a known-good PCM (see page 11-8).

14. Start the engine. Hold the engine speed at 3,000 rpm without load (in Park or neutral) until the radiator fan comes on, then let it idle.

15. Check for Temporary DTCs or DTCs with the HDS.

    *Is DTC P2195 indicated?*

    **YES**—Check for poor connections or loose terminals at the A/F sensor (Sensor 1) and the PCM. If the PCM was updated, substitute a known-good PCM (see page 11-8), then recheck. If the PCM was substituted, go to step 1.

    **NO**—Go to step 16.

16. Monitor the OBD STATUS for DTC P2195 in the DTCs MENU with the HDS.

    *Does the screen indicate PASSED?*

    **YES**—If the PCM was updated, troubleshooting is complete. If the PCM was substituted, replace the original PCM (see page 11-252). If any other Temporary DTCs or DTCs were indicated in step 15, go to the indicated DTC's troubleshooting.■

    **NO**—If the screen indicates FAILED, check for poor connections or loose terminals at the A/F sensor (Sensor 1) and the PCM. If the PCM was updated, substitute a known-good PCM (see page 11-8), then go to step 14. If the PCM was substituted, go to step 1. If the screen indicates NOT COMPLETED, keep idling until a result comes on.



BACK

Protected by AR

## **DTC P2199:** IAT Sensor 1, 2 Incorrect Correlation

NOTE: Before you troubleshoot, record all freeze data and any on-board snapshot, and review the general troubleshooting information (see page 11-3).

1. Turn the ignition switch OFF.
2. Remove MAF sensor/IAT sensor 1 (see page 11-247).
3. Remove IAT sensor 2 (see page 11-248).
4. Cool the sensors to ambient temperature.
5. Note the ambient temperature.
6. Connect MAF sensor/IAT sensor 1 5P connector and IAT sensor 2 2P connector.
7. Turn the ignition switch ON (II).
8. Note the value of IAT SENSOR 1 and IAT SENSOR 2 quickly in the DATA LIST with the HDS.
9. Compare the value of IAT SENSOR 1 and IAT SENSOR 2 to the ambient temperature.

   *Does the value of IAT SENSOR 1 or IAT SENSOR 2 differ 34 °F (19 °C) or more?*

   **YES**—Go to step 10.

   **NO**—Intermittent failure, the system is OK at this time. Check for poor connections or loose terminals at IAT sensor 1, IAT sensor 2, and the PCM. ■

10. Replace the sensor that differed more than 34 °F (19 °C) from the ambient temperature.

    - MAF sensor/IAT sensor 1 (see page 11-247)
    - IAT sensor 2 (see page 11-248)

11. Turn the ignition switch ON (II).
12. Reset the PCM with the HDS.
13. Do the PCM idle learn procedure (see page 11-339).
14. Turn the ignition switch OFF.
15. Open the hood, and let the engine cool for more than 6 hours.
16. Start the engine, and let it idle.
17. Check for Temporary DTCs or DTCs with the HDS.

    *Is DTC P2199 indicated?*

    **YES**—Check for poor connections or loose terminals at IAT sensor 1, IAT sensor 2, and the PCM, then go to step 1.

    **NO**—Go to step 18.

18. Monitor the OBD STATUS for DTC P2199 in the DTCs MENU with the HDS.

    *Does the screen indicate PASSED?*

    **YES**—Troubleshooting is complete. If any other Temporary DTCs or DTCs were indicated in step 17, go to the indicated DTC's troubleshooting. ■

    **NO**—If the screen indicates FAILED, check for poor connections or loose terminals at IAT sensor 1, IAT sensor 2, and the PCM, then go to step 1. If the screen indicates NOT COMPLETED, go to step 14.

Protected by AR



## DTC Troubleshooting (cont'd)

### DTC P2227: BARO Sensor Circuit Range/ Performance Problem

NOTE: Before you troubleshoot, record all freeze data and any on-board snapshot, and review the general troubleshooting information (see page 11-3).

1. Turn the ignition switch ON (II), and wait 2 seconds.

2. Check the BARO SENSOR in the DATA LIST with the HDS.

   *Is about 101 kPa (29.9 in.Hg, 760 mmHg), or about 2.9 V at sea level indicated?*

   **YES**—Go to step 3.

   **NO**—Go to step 7.

3. Clear the DTC with the HDS.

4. Start the engine. Hold the engine speed at 3,000 rpm without load (in Park or neutral) until the radiator fan comes on, then let it idle.

5. Test-drive under these conditions:

   - Engine speed above 1,750 rpm
   - Transmission in D position
   - REL TP SENSOR above 22 deg
   - Drive 5 seconds or more

6. Monitor the OBD STATUS for DTC P2227 in the DTCs MENU with the HDS.

   *Does the screen indicate FAILED?*

   **YES**—Go to step 7.

   **NO**—If the screen indicates PASSED, intermittent failure, the system is OK at this time. If the screen indicates NOT COMPLETED, go to step 4 and recheck.

7. Update the PCM if it does not have the latest software (see page 11-7), or substitute a known-good PCM (see page 11-8).

8. Start the engine. Hold the engine speed at 3,000 rpm without load (in Park neutral) until the radiator fan comes on, then let it idle.

9. Test-drive under these conditions:

   - Engine speed above 1,750 rpm
   - Transmission in D position
   - REL TP SENSOR above 22 deg
   - Drive 5 seconds or more

10. Check for Temporary DTCs or DTCs with the HDS.

    *Is DTC P2227 indicated?*

    **YES**—Check for poor connections or loose terminals at the PCM. If the PCM was updated, substitute a known-good PCM (see page 11-8), then go to step 8. If the PCM was substituted, go to step 1.

    **NO**—Go to step 11.

11. Monitor the OBD STATUS for DTC P2227 in the DTCs MENU with the HDS.

    *Does the screen indicate PASSED?*

    **YES**—If the PCM was updated, troubleshooting is complete. If the PCM was substituted, replace the original PCM (see page 11-252). If any other Temporary DTCs or DTCs were indicated in step 10, go to the indicated DTC's troubleshooting. ■

    **NO**—If the screen indicates FAILED, check for poor connections or loose terminals at the PCM. If the PCM was updated, substitute a known-good PCM (see page 11-8), then go to step 8. If the PCM was substituted, go to step 1. If the screen indicates NOT COMPLETED, go to step 8.



BACK

Protected by AR

## **DTC P2228:** BARO Sensor Circuit Low Voltage

NOTE: Before you troubleshoot, record all freeze data and any on-board snapshot, and review the general troubleshooting information (see page 11-3).

1. Turn the ignition switch ON (II).

2. Check the BARO SENSOR in the DATA LIST with the HDS.

   *Is about 53 kPa (15.6 in.Hg, 397 mmHg), or 1.58 V or less indicated?*

   **YES**—Go to step 3.

   **NO**—Intermittent failure, the system is OK at this time.■

3. Update the PCM if it does not have the latest software (see page 11-7), or substitute a known-good PCM (see page 11-8).

4. Check for Temporary DTCs or DTCs with the HDS.

   *Is DTC P2228 indicated?*

   **YES**—Check for poor connections or loose terminals at the PCM. If the PCM was updated, substitute a known-good PCM (see page 11-8), then recheck. If the PCM was substituted, go to step 1.

   **NO**—If the PCM was updated, troubleshooting is complete. If the PCM was substituted, replace the original PCM (see page 11-252). If any other Temporary DTCs or DTCs are indicated, go to the indicated DTC's troubleshooting.■

## **DTC P2229:** BARO Sensor Circuit High Voltage

NOTE: Before you troubleshoot, record all freeze data and any on-board snapshot, and review the general troubleshooting information (see page 11-3).

1. Turn the ignition switch ON (II).

2. Check the BARO SENSOR in the DATA LIST with the HDS.

   *Is about 160 kPa (47.2 in.Hg, 1,200 mmHg), or 4.5 V or more indicated?*

   **YES**—Go to step 3.

   **NO**—Intermittent failure, the system is OK at this time.■

3. Update the PCM if it does not have the latest software (see page 11-7), or substitute a known-good PCM (see page 11-8).

4. Check for Temporary DTCs or DTCs with the HDS.

   *Is DTC P2229 indicated?*

   **YES**—Check for poor connections or loose terminals at the PCM. If the PCM was updated, substitute a known-good PCM (see page 11-8), then recheck. If the PCM was substituted, go to step 1.

   **NO**—If the PCM was updated, troubleshooting is complete. If the PCM was substituted, replace the original PCM (see page 11-252). If any other Temporary DTCs or DTCs are indicated, go to the indicated DTC's troubleshooting.■

Protected by AR



## DTC Troubleshooting (cont'd)

### DTC P2238: A/F Sensor (Sensor 1) AFS+ Circuit Low Voltage

NOTE: Before you troubleshoot, record all freeze data and any on-board snapshot, and review the general troubleshooting information (see page 11-3).

1. Turn the ignition switch ON (II).
2. Clear the DTC with the HDS.
3. Check for Temporary DTCs or DTCs with the HDS.

   *Is DTC P2238 indicated?*

   **YES**—Go to step 4.

   **NO**—Intermittent failure, the system is OK at this time. Check for poor connections or loose terminals at the A/F sensor (Sensor 1) and the PCM. ■
4. Turn the ignition switch OFF.
5. Jump the SCS line with the HDS.
6. Disconnect the A/F sensor (Sensor 1) 4P connector.
7. Disconnect PCM connector C (44P).
8. Check for continuity between PCM connector terminal C29 and body ground.

**PCM CONNECTOR C (44P)**

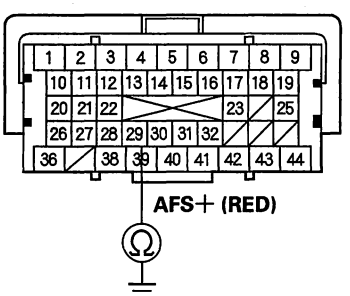


Terminal side of female terminals

*Is there continuity?*

**YES**—Repair short in the wire between the PCM (C29) and the A/F sensor (Sensor 1), then go to step 10.

**NO**—Go to step 9.

9. Replace the A/F sensor (Sensor 1) (see page 11-245).
10. Reconnect all connectors.
11. Turn the ignition switch ON (II).
12. Reset the PCM with the HDS.
13. Do the PCM idle learn procedure (see page 11-339).
14. Check for Temporary DTCs or DTCs with the HDS.

    *Is DTC P2238 indicated?*

    **YES**—Check for poor connections or loose terminals at the A/F sensor (Sensor 1) and the PCM, then go to step 1. If the connector and terminal fits are OK, go to step 16.

    **NO**—Go to step 15.



BACK

Protected by AR

15. Monitor the OBD STATUS for DTC P2238 in the DTCs MENU with the HDS.

    *Does the screen indicate PASSED?*

    **YES**—Troubleshooting is complete. If any other Temporary DTCs or DTCs were indicated in step 14, go to the indicated DTC's troubleshooting.■

    **NO**—If the screen indicates FAILED, check for poor connections or loose terminals at the A/F sensor (Sensor 1) and the PCM, then go to step 1. If the screen indicates NOT COMPLETED, keep idling until a result come on.

16. Update the PCM if it does not have the latest software (see page 11-7), or substitute a known-good PCM (see page 11-8).

17. Start the engine, and let it idle.

18. Check for Temporary DTCs or DTCs with the HDS.

    *Is DTC P2238 indicated?*

    **YES**—If the PCM was updated, substitute a known-good PCM (see page 11-8), then go to step 17. If the PCM was substituted, go to step 1.

    **NO**—Go to step 19.

19. Monitor the OBD STATUS for DTC P2238 in the DTCs MENU with the HDS.

    *Does the screen indicate PASSED?*

    **YES**—If the PCM was updated, troubleshooting is complete. If the PCM was substituted, replace the original PCM (see page 11-252). If any other Temporary DTCs or DTCs were indicated in step 18, go to the indicated DTC's troubleshooting.■

    **NO**—If the screen indicates FAILED, go to step 1. If the PCM was updated, substitute a known-good PCM (see page 11-8), then go to step 17. If the PCM was substituted, go to step 1. If the screen indicates NOT COMPLETED, keep idling idle until a result comes on.

Protected by AR



## DTC Troubleshooting (cont'd)

### DTC P2252: A/F Sensor (Sensor 1) AFS— Circuit Low Voltage

NOTE: Before you troubleshoot, record all freeze data and any on-board snapshot, and review the general troubleshooting information (see page 11-3).

1. Turn the ignition switch ON (II).
2. Clear the DTC with the HDS.
3. Start the engine, and let it idle.
4. Check for Temporary DTCs or DTCs with the HDS.

   *Is DTC P2252 indicated?*

   **YES**—Go to step 5.

   **NO**—Intermittent failure, the system is OK at this time. Check for poor connections or loose terminals at the A/F sensor (Sensor 1) and the PCM. ■
5. Turn the ignition switch OFF.
6. Jump the SCS line with the HDS.
7. Disconnect the A/F sensor (Sensor 1) 4P connector.
8. Disconnect PCM connector C (44P).
9. Check for continuity between PCM connector terminal C30 and body ground.

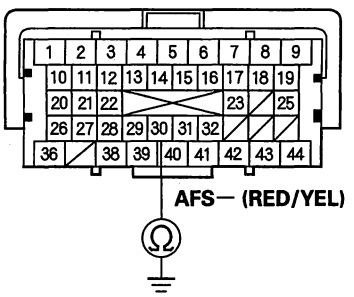


Terminal side of female terminals

   *Is there continuity?*

   **YES**—Repair short in the wire between the PCM (C30) and the A/F sensor (Sensor 1), then go to step 11.

   **NO**—Go to step 10.
10. Replace the A/F sensor (Sensor 1) (see page 11-245).
11. Reconnect all connectors.
12. Turn the ignition switch ON (II).
13. Reset the PCM with the HDS.
14. Do the PCM idle learn procedure (see page 11-339).
15. Check for Temporary DTCs or DTCs with the HDS.

    *Is DTC P2252 indicated?*

    **YES**—Check for poor connections or loose terminals at the A/F sensor (Sensor 1) and the PCM, then go to step 1. If the connector and terminal fits are OK, go to step 17.

    **NO**—Go to step 16.



BACK

Protected by AR

16. Monitor the OBD STATUS for DTC P2252 in the DTCs MENU with the HDS.

    *Does the screen indicate PASSED?*

    **YES**—Troubleshooting is complete. If any other Temporary DTCs or DTCs were indicated in step 15, go to the indicated DTC's troubleshooting.■

    **NO**—If the screen indicates FAILED, check for poor connections or loose terminals at the A/F sensor (Sensor 1) and the PCM, then go to step 1. If the screen indicates NOT COMPLETED, keep idling until a result comes on.

17. Update the PCM if it does not have the latest software (see page 11-7), or substitute a known-good PCM (see page 11-8).

18. Start the engine, and let it idle.

19. Check for Temporary DTCs or DTCs with the HDS.

    *Is DTC P2252 indicated?*

    **YES**—If the PCM was updated, substitute a known-good PCM (see page 11-8), then go to step 18. If the PCM was substituted, go to step 1.

    **NO**—Go to step 20.

20. Monitor the OBD STATUS for DTC P2252 in the DTCs MENU with the HDS.

    *Does the screen indicate PASSED?*

    **YES**—If the PCM was updated, troubleshooting is complete. If the PCM was substituted, replace the original PCM (see page 11-252). If any other Temporary DTCs or DTCs were indicated in step 19, go to the indicated DTC's troubleshooting.■

    **NO**—If the screen indicates FAILED, go to step 1. If the PCM was updated, substitute a known-good PCM (see page 11-8), then go to step 18. If the screen indicates NOT COMPLETED, keep idling idle until a result comes on.

Protected by AR



## DTC Troubleshooting (cont'd)

**DTC P2270:** Secondary HO2S (Sensor 2) Circuit Signal Stuck Lean

**DTC P2271:** Secondary HO2S (Sensor 2) Circuit Signal Stuck Rich

NOTE: Before you troubleshoot, record all freeze data and any on-board snapshot, and review the general troubleshooting information (see page 11-3).

1. Turn the ignition switch ON (II).
2. Clear the DTC with the HDS.
3. Start the engine, and let it idle without load (in Park or neutral) until the radiator fan comes on.
4. Test-drive under these conditions:
   - ECT SENSOR 1 above 158 °F (70 °C)
   - Vehicle speed at 35 mph (56 km/h) or more for at least 25 seconds
5. Monitor the OBD STATUS for DTC P2270 or P2271 in the DTCs MENU with the HDS.

   *Does the screen indicate FAILED?*

   **YES**—Go to step 6.

   **NO**—If the screen indicates PASSED, intermittent failure, the system is OK at this time. Check for poor connections or loose terminals at the secondary HO2S (Sensor 2) and the PCM. If the screen indicates EXECUTING, keep driving until a result comes on. If the screen indicates OUT OF CONDITION, go to step 3 and recheck.
6. Turn the ignition switch OFF.
7. Replace the secondary HO2S (Sensor 2) (see page 11-245).
8. Turn the ignition switch ON (II).
9. Reset the PCM with the HDS.
10. Do the PCM idle learn procedure (see page 11-339).
11. Start the engine, and let it idle without load (in Park or neutral) until the radiator fan comes on.
12. Test-drive under these conditions:
    - ECT SENSOR 1 above 158 °F (70 °C)
    - Vehicle speed at 35 mph (56 km/h) or more for at least 25 seconds
13. Check for Temporary DTCs or DTCs with the HDS.

    *Is DTC P2270 or P2271 indicated?*

    **YES**—Check for poor connections or loose terminals at the secondary HO2S (Sensor 2) and the PCM, then go to step 1.

    **NO**—Go to step 14.
14. Monitor the OBD STATUS for DTC P2270 or P2271 in the DTCs MENU with the HDS.

    *Does the screen indicate PASSED?*

    **YES**—Troubleshooting is complete. If any other Temporary DTCs or DTCs were indicated in step 13, go to the indicated DTC's troubleshooting. ■

    **NO**—If the screen indicates FAILED, check for poor connections or loose terminals at the secondary HO2S (Sensor 2) and the PCM, then go to step 1. If the screen indicates EXECUTING, keep driving until a result comes on. If the screen indicates OUT OF CONDITION, go to step 11.



BACK

Protected by AR

## **DTC P2610:** PCM Ignition Off Internal Timer Malfunction

NOTE: Before you troubleshoot, record all freeze data and any on-board snapshot, and review the general troubleshooting information (see page 11-3).

1. Turn the ignition switch ON (II).

2. Clear the DTC with the HDS.

3. Check for Temporary DTCs or DTCs with the HDS.

   *Is DTC P2610 indicated?*

   **YES**—Go to step 4.

   **NO**—Intermittent failure, the system is OK at this time. ■

4. Update the PCM if it does not have the latest software (see page 11-7), or substitute a known-good PCM (see page 11-8).

5. Check for Temporary DTCs or DTCs with the HDS.

   *Is DTC P2610 indicated?*

   **YES**—If the PCM was updated, substitute a known-good PCM (see page 11-8), then recheck. If the PCM was substituted, go to step 1.

   **NO**—If the PCM was updated, troubleshooting is complete. If the PCM was substituted, replace the original PCM (see page 11-252). If any other Temporary DTCs or DTCs are indicated, go to the indicated DTC's troubleshooting. ■

Protected by AR



## DTC Troubleshooting (cont'd)

### DTC P2A00: A/F Sensor (Sensor 1) Circuit Range/Performance Problem

NOTE: Before you troubleshoot, record all freeze data and any on-board snapshot, and review the general troubleshooting information (see page 11-3).

1. Turn the ignition switch ON (II).
2. Clear the DTC with the HDS.
3. Start the engine. Hold the engine speed at 3,000 rpm without load (in Park or neutral) until the radiator fan comes on, then let it idle.
4. Test-drive under these conditions:
   - ECT SENSOR 1 above 158 °F (70 °C)
   - Transmission in D position
   - Vehicle speed between 25—55 mph (40—88 km/h) for 5 minutes.
   - Drive at a steady speed between 55—75 mph (88—120 km/h) for 10 seconds.
5. Monitor the OBD STATUS for DTC P2A00 in the DTCs MENU with the HDS.

   *Does the screen indicate FAILED?*

   **YES**—Go to step 6.

   **NO**—If the screen indicates PASSED, intermittent failure, the system is OK at this time. Check for poor connections or loose terminals at the A/F sensor (Sensor 1) and the PCM. If the screen indicates EXECUTING, keep driving until a result comes on. If the screen indicates OUT OF CONDITION, go to step 3 and recheck.
6. Turn the ignition switch OFF.
7. Replace the A/F sensor (Sensor 1) (see page 11-245).
8. Turn the ignition switch ON (II).
9. Reset the PCM with the HDS.
10. Do the PCM idle learn procedure (see page 11-339).
11. Start the engine. Hold the engine speed at 3000 rpm without load (in Park or neutral) until the radiator fan comes on, then let it idle.
12. Test-drive under these conditions:
    - ECT SENSOR 1 above 158 °F (70 °C)
    - Transmission in D position
    - Vehicle speed between 25—55 mph (40—88 km/h) for 5 minutes.
    - Drive at a steady speed between 55—75 mph (88—120 km/h) for 10 seconds.
13. Check for Temporary DTCs or DTCs with the HDS.

    *Is DTC P2A00 indicated?*

    **YES**—Check for poor connections or loose terminals at the A/F sensor (Sensor 1) and the PCM, then go to step 1.

    **NO**—Go to step 14.
14. Monitor the OBD STATUS for DTC P2A00 in the DTCs MENU with the HDS.

    *Does the screen indicate PASSED?*

    **YES**—Troubleshooting is complete. If any other Temporary DTCs or DTCs were indicated in step 13, go to the indicated DTC's troubleshooting. ■

    **NO**—If the screen indicates FAILED, check for poor connections or loose terminals at the A/F sensor (Sensor 1) and the PCM, then go to step 1. If the screen indicates EXECUTING, keep driving until a result comes on. If the screen indicates OUT OF CONDITION, go to step 11.



BACK

Protected by AR

## **DTC U0028:** F-CAN Malfunction (BUS-OFF)

NOTE: Before you troubleshoot, record all freeze data and any on-board snapshot, and review the general troubleshooting information (see page 11-3).

1. Turn the ignition switch ON (II).

2. Clear the DTC with the HDS.

3. Check for Temporary DTCs or DTCs with the HDS.

   *Is DTC U0028 indicated?*

   **YES**—Go to step 4.

   **NO**—Intermittent failure, the system is OK at this time.■

4. Update the PCM if it does not have the latest software (see page 11-7), or substitute a known-good PCM (see page 11-8).

5. Turn the ignition switch ON (II).

6. Check for Temporary DTCs or DTCs with the HDS.

   *Is DTC P0028 indicated?*

   **YES**—If the PCM was updated, substitute a known-good PCM (see page 11-8), then recheck. If the PCM was substituted, go to step 1.

   **NO**—If the PCM was updated, troubleshooting is complete. If the PCM was substituted, replace the original PCM (see page 11-252). If any other Temporary DTCs or DTCs are indicated, go to the indicated DTC's troubleshooting.■

Protected by AR



## DTC Troubleshooting (cont'd)

### DTC U0114: F-CAN Malfunction (PCM-SH-AWD Control Unit)

NOTE:
- Before you troubleshoot, record all freeze data and any on-board snapshot, and review the general troubleshooting information (see page 11-3).
- If DTC U0028 is stored at the same time as DTC U0114, troubleshoot DTC U0028 first, then recheck for DTC U0114.

1. Turn the ignition switch ON (II).

2. Clear the DTC with the HDS.

3. Check for Temporary DTCs or DTCs with the HDS.

   *Is DTC U0114 indicated?*

   **YES**—Go to step 4.

   **NO**—Intermittent failure, the system is OK at this time. Check for poor connections or loose terminals at the gauge assembly, the SH-AWD control unit, and the PCM. ■

4. Check for SH-AWD system DTCs with the HDS.

   *Is SH-AWD system DTC 41 and/or 77 indicated?*

   **YES**—Go to step 5.

   **NO**—Go to step 8.

5. Turn the ignition switch OFF.

6. Disconnect SH-AWD control unit connector A (20P) (see page 15-71).

7. Check for continuity between SH-AWD control unit connector terminals A10 and A20.

**SH-AWD CONTROL UNIT CONNECTOR A (20P)**

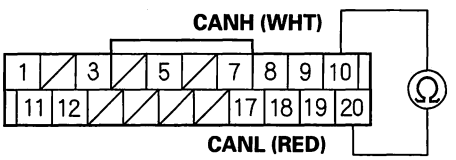


Wire side of female terminals

   *Is there continuity?*

   **YES**—Substitute a known-good SH-AWD control unit, then go to step 16 and recheck. If DTC U0114 is not indicated, replace the original SH-AWD control unit, then go to step 16.

   **NO**—Repair open in the wire between the SH-AWD control unit (A10 (A20)*) and the PCM (A36 (A37)*), then go to step 16.

   *: CANL line

8. Check for a poor connection at SH-AWD control unit connectors A (20P) and B (8P).

   *Are the connections OK?*

   **YES**—Go to step 9.

   **NO**—Repair the poor connection at SH-AWD control unit connectors A (20P) and B (8P), then go to step 16.

9. Turn the ignition switch OFF.

10. Disconnect SH-AWD control unit connector A (20P) (see page 15-71).

11. Turn the ignition switch ON (II).



BACK

Protected by AR

12. Measure voltage between SH-AWD control unit connector terminal A7 and body ground.

**SH-AWD CONTROL UNIT CONNECTOR A (20P)**

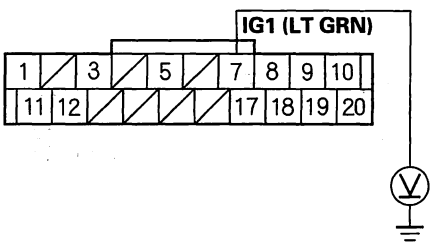


Wire side of female terminals

*Is there battery voltage?*

**YES**—Go to step 13.

**NO**—Check the No. 1 IG1 SH-AWD (7.5 A) fuse in the under-dash fuse/relay box. If the fuse is OK, repair open in the wire between the No. 1 IG1 SH-AWD (7.5 A) fuse and the SH-AWD control unit, then go to step 16.

13. Turn the ignition switch OFF.

14. Disconnect SH-AWD control unit connector B (8P).

15. Check for continuity between body ground and SH-AWD control unit connector terminals B2 and B3 individually, and between SH-AWD control unit connector terminal A9 and body ground.

**SH-AWD CONTROL UNIT CONNECTOR B (8P)**

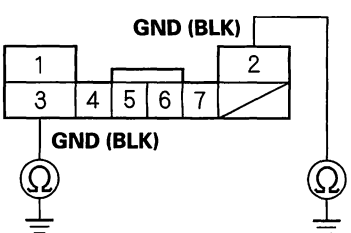


Wire side of female terminals

**SH-AWD CONTROL UNIT CONNECTOR A (20P)**

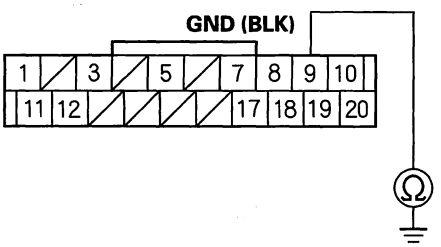


Wire side of female terminals

*Is there continuity?*

**YES**—Substitute a known-good SH-AWD control unit, then go to step 16 and recheck. If DTC U0114 is not indicated, replace the original SH-AWD control unit, then go to step 16.

**NO**—Repair open in the wire between the SH-AWD control unit and G601, then go to step 16.

16. Reconnect all connectors.

17. Turn the ignition switch ON (II).

18. Reset the PCM with the HDS.

19. Do the PCM idle learn procedure (see page 11-339).

20. Check for Temporary DTCs or DTCs with the HDS.

*Is DTC U0114 indicated?*

**YES**—Check for poor connections or loose terminals at the gauge control module, the SH-AWD control unit, and the PCM, then go to step 1.

**NO**—Troubleshooting is complete. If any other Temporary DTCs or DTCs are indicated, go to the indicated DTC's troubleshooting. ■

Protected by AR



## DTC Troubleshooting (cont'd)

### DTC U0122: F-CAN Malfunction (PCM-VSA)

NOTE: Before you troubleshoot, record all freeze data and any on-board snapshot, and review the general troubleshooting information (see page 11-3).

1. Turn the ignition switch ON (II).
2. Clear the DTC with the HDS.
3. Check for Temporary DTCs or DTCs with the HDS.

   *Is DTC U0122 indicated?*

   **YES**—Go to step 4.

   **NO**—Intermittent failure, the system is OK at this time. Check for poor connections or loose terminals at the gauge control module, the VSA modulator-control unit, and the PCM. ■

4. Check for VSA system DTCs in the DTCs MENU with the HDS.

   *Is VSA DTC 86 indicated?*

   **YES**—Go to step 5.

   **NO**—Go to step 8.

5. Turn the ignition switch OFF.
6. Disconnect the VSA modulator-control unit 46P connector (see page 19-137).
7. Check for continuity between VSA modulator-control unit 46P connector terminals No. 38 and No. 39.

**VSA MODULATOR-CONTROL UNIT 46P CONNECTOR**

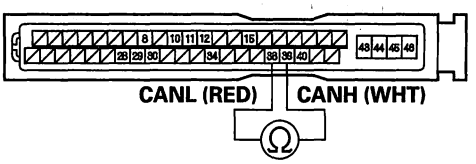


Wire side of female terminals

*Is there continuity?*

**YES**—Substitute a known-good VSA modulator-control unit, then go to step 15 and recheck. If DTC U0122 is not indicated, replace the original VSA modulator-control unit, then go to step 15.

**NO**—Repair open in the wire between the VSA modulator-control unit (No. 39 (No. 38)*) and the PCM (A36 (A37)*), then go to step 15.

*: CANL line

8. Check for poor connections at the VSA modulator-control unit 46P connector.

   *Are the connections OK?*

   **YES**—Go to step 9.

   **NO**—Repair the poor connection(s), then go to step 15.



BACK

Protected by AR

9. Turn the ignition switch OFF.

10. Disconnect the VSA modulator-control unit 46P connector (see page 19-137).

11. Turn the ignition switch ON (II).

12. Measure voltage between VSA modulator-control unit 46P connector terminal No. 40 and body ground.

**VSA MODULATOR-CONTROL UNIT 46P CONNECTOR**

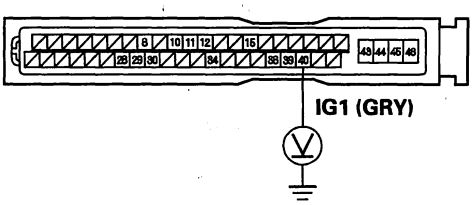


Wire side of female terminals

*Is there battery voltage?*

**YES**—Go to step 13.

**NO**—Check the No. 4 ABS VSA (7.5 A) fuse in the under-dash fuse/relay box. If the fuse is OK, repair open in the wire between the No. 4 ABS VSA (7.5 A) fuse and the VSA modulator-control unit, then go to step 15.

13. Turn the ignition switch OFF.

14. Check for continuity between VSA modulator-control unit 46P connector terminal No. 43, No. 46 and body ground individually.

**VSA MODULATOR-CONTROL UNIT 46P CONNECTOR**

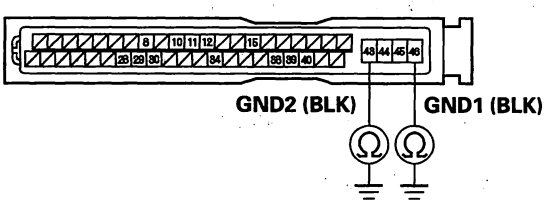


Wire side of female terminals

*Is there continuity?*

**YES**—Substitute a known-good VSA modulator-control unit (see page 19-137), then go to step 15 and recheck. If DTC U0122 is not indicated, replace the original VSA modulator-control unit (see page 19-137), then go to step 15.

**NO**—Repair open in the wire between the VSA modulator-control unit and body ground (G402), then go to step 15.

15. Reconnect the VSA modulator-control unit 46P connector.

16. Turn the ignition switch ON (II).

17. Reset the PCM with the HDS.

18. Do the PCM idle learn procedure (see page 11-339).

19. Check for Temporary DTCs or DTCs with the HDS.

*Is DTC U0122 indicated?*

**YES**—Check for poor connections or loose terminals at the gauge control module, the VSA modulator-control unit, and the PCM, then go to step 1.

**NO**—Troubleshooting is complete. If any other Temporary DTCs or DTCs are indicated, go to the indicated DTC's troubleshooting. ■

Protected by AR



## DTC Troubleshooting (cont'd)

### DTC U0155: F-CAN Malfunction (PCM-Gauge Control Module)

NOTE: Before you troubleshoot, record all freeze data and any on-board snapshot, and review the general troubleshooting information (see page 11-3).

1. Turn the ignition switch ON (II).
2. Clear the DTC with the HDS.
3. Check for Temporary DTCs or DTCs with the HDS.

   *Is DTC U0155 indicated?*

   **YES**—Go to step 4.

   **NO**—Intermittent failure, the system is OK at this time. Check for poor connections or loose terminals at the gauge control module and the PCM.■

4. Check for body electrical DTCs with the HDS.

   *Is DTC B1168, B1169, and/or B1178 indicated?*

   **YES**—Go to step 5.

   **NO**—Do the gauge control module input test (see page 22-282).■

5. Turn the ignition switch OFF.
6. Jump the SCS line with the HDS.
7. Remove the gauge control module (see page 22-284).
8. Disconnect the gauge control module 36P connector.
9. Disconnect PCM connector A (44P).
10. Connect gauge control module 36P connector terminal No. 28 to body ground with a jumper wire.

**GAUGE CONTROL MODULE 36P CONNECTOR**

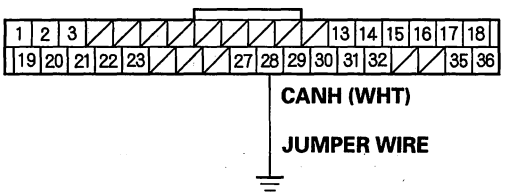


Wire side of female terminals

11. Check for continuity between PCM connector terminal A36 and body ground.

**PCM CONNECTOR A (44P)**

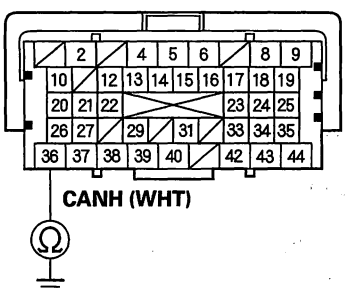


Terminal side of female terminals

*Is there continuity?*

**YES**—Go to step 12.

**NO**—Repair open in the wire between the PCM (A36) and the gauge control module, then go to step 14.



BACK

Protected by AR

12. Connect gauge control module 36P connector terminal No. 29 to body ground with a jumper wire.

**GAUGE CONTROL MODULE 36P CONNECTOR**

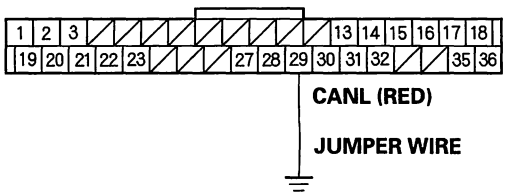


Wire side of female terminals

13. Check for continuity between PCM connector terminal A37 and body ground.

**PCM CONNECTOR A (44P)**

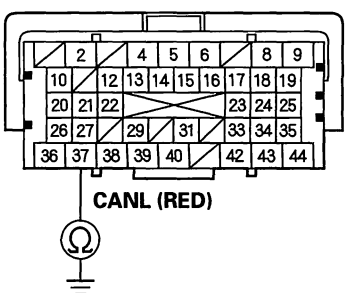


Terminal side of female terminals

*Is there continuity?*

**YES**—Substitute a known-good gauge control module (see page 22-284), then go to step 14 and recheck. If no DTCs are indicated, replace the original gauge control module (see page 22-284), then go to step 14.

**NO**—Repair open in the wire between the PCM (A37) and the gauge control module, then go to step 14.

14. Reconnect all connectors.

15. Turn the ignition switch ON (II).

16. Reset the PCM with the HDS.

17. Do the PCM idle learn procedure (see page 11-339).

18. Check for Temporary DTCs or DTCs with the HDS.

*Is DTC U0155 indicated?*

**YES**—Check for poor connections or loose terminals at the gauge control module and the PCM, then go to step 1.

**NO**—Troubleshooting is complete. If any other Temporary DTCs or DTCs are indicated, go to the indicated DTC's troubleshooting. ■

Protected by AR



## DTC Troubleshooting (cont'd)

### **DTC U0300:** PGM-FI System and A/T System Program Version Mismatch

NOTE:
- Before you troubleshoot, record all freeze data and any on-board snapshot, and review the general troubleshooting information (see page 11-3).
- Do not turn the ignition switch OFF while updating the PCM. If you turn the ignition switch OFF before completion, the PCM will be damaged.

1. Do the PCM update procedure (PGM-FI system) (see page 11-7).

2. Do the PCM update procedure (A/T system) (see page 14-8).

3. Check for Temporary DTCs or DTCs with the HDS.

   *Is DTC U0300 indicated?*

   **YES**—Replace the original PCM (see page 11-252). ■

   **NO**—The update is complete. If any other Temporary DTCs or DTCs are indicated, go to the indicated DTC's troubleshooting. ■



BACK

Protected by AR

# F-CAN Circuit Troubleshooting (Part 1)

NOTE: Information marked with an asterisk (*) applies to the CANL line.

1. Turn the ignition switch OFF.
2. Jump the SCS line with the HDS.
3. Disconnect PCM connector A (44P), then disconnect the HDS.
4. Measure resistance between PCM connector terminals A36 and A37.

**PCM CONNECTOR A (44P)**

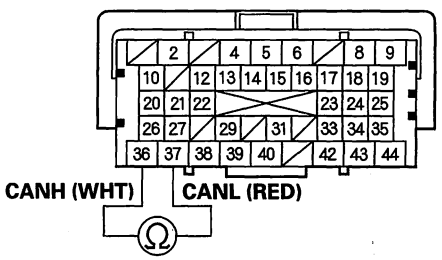


Terminal side of female terminals

*Is there about 85—103 Ω ((with AcuraLink navigation system), 88—107 Ω (with non-AcuraLink navigation system), or 91—111 Ω (without navigation system))?*

**YES**—Go to "F-CAN Circuit Trouble shooting (Part 2)" (see page 11-224).

**NO**—Go to step 5.

5. Disconnect the gauge control module 36P connector (see page 22-284).
6. Disconnect the VSA modulator-control unit 46P connector (see page 19-37).
7. Disconnect SRS unit connector A (28P) (see step 12 on page 24-23).
8. Disconnect the steering angle sensor 5P connector (see page 19-82).
9. Disconnect the yaw rate-lateral acceleration sensor 4P connector (see page 19-135).
10. Disconnect TPMS control unit 20P connector (see page 18-90).
11. Disconnect the SH-AWD control unit connector A (20P) (see page 15-71).
12. With navigation system: Disconnect the navigation unit connector A (20P) (see page 23-190).
13. With AcuraLink system: Disconnect the AcuraLink control unit (XM receiver) connector A (20P) (see page 23-108).
14. Check for continuity between PCM connector terminals A36 and A37.

**PCM CONNECTOR A (44P)**

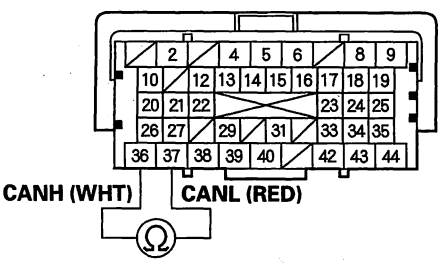


Terminal side of female terminals

*Is there continuity?*

**YES**—Repair short in the wires between PCM connector terminals A36 and A37*. ■

**NO**—Go to step 15.

(cont'd)

Protected by AR



## F-CAN Circuit Troubleshooting (Part 1) (cont'd)

15. Connect PCM connector terminal A36 to body ground with a jumper wire.

**PCM CONNECTOR A (44P)**

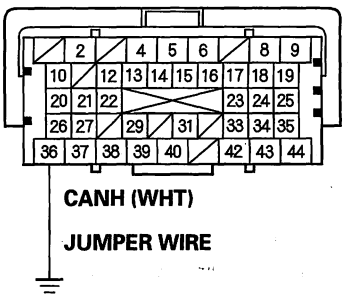


Terminal side of female terminals

16. Check for continuity between gauge control module 36P connector terminal No. 28 and body ground.

**GAUGE CONTROL MODULE 36P CONNECTOR**

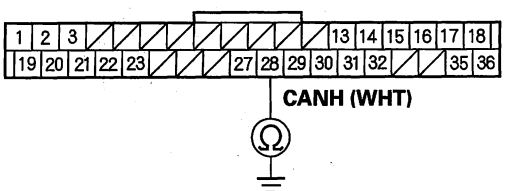


Wire side of female terminals

*Is there continuity?*

**YES**—Go to step 17.

**NO**—Repair open in the wire between the PCM (A36) and the gauge control module.■

17. Check for continuity between VSA modulator-control unit 46P connector terminal No. 39 and body ground.

**VSA MODULATOR-CONTROL UNIT 46P CONNECTOR**

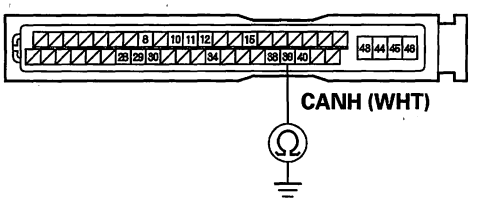


Wire side of female terminals

*Is there continuity?*

**YES**—Go to step 18.

**NO**—Repair open in the wire between the PCM (A36) and the VSA modulator-control unit.■



BACK

Protected by AR

18. Check for continuity between SRS unit connector A (28P) terminal No. 11 and body ground.

**SRS UNIT CONNECTOR A (28P)**

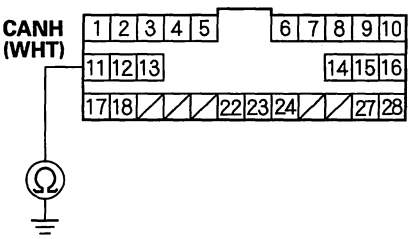


Wire side of female terminals

*Is there continuity?*

**YES**—Go to step 19.

**NO**—Repair open in the wire between the PCM (A36) and the SRS unit. ■

19. Check for continuity between steering angle sensor 5P connector terminal No. 4 and body ground.

**STEERING ANGLE SENSOR 5P CONNECTOR**

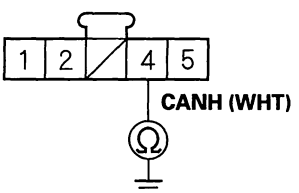


Wire side of female terminals

*Is there continuity?*

**YES**—Go to step 20.

**NO**—Repair open in the wire between the PCM connector (A36) and the steering angle sensor. ■

20. Check for continuity between yaw rate-lateral acceleration sensor 4P connector terminal No. 3 and body ground.

**YAW RATE-LATERAL ACCELERATION SENSOR 4P CONNECTOR**

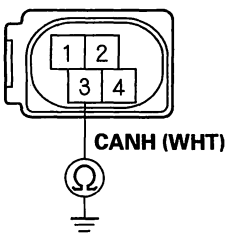


Wire side of female terminals

*Is there continuity?*

**YES**—Go to step 21.

**NO**—Repair open in the wire between the PCM (A36) and the yaw rate-lateral acceleration sensor. ■

21. Check for continuity between TPMS control unit 20P connector terminal No. 1 and body ground.

**TPMS CONTROL UNIT 20P CONNECTOR**

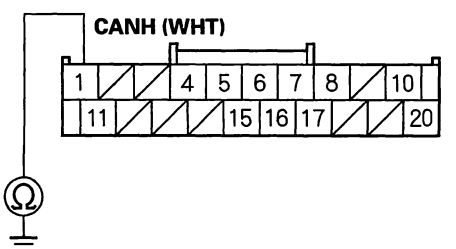


Wire side of female terminals

*Is there continuity?*

**YES**—Go to step 22.

**NO**—Repair open in the wire between the PCM (A36) and the TPMS control unit. ■

(cont'd)

Protected by AR



## F-CAN Circuit Troubleshooting (Part 1) (cont'd)

22. Check for continuity between SH-AWD control unit connector A (20P) terminal No. 10 and body ground.

**SH-AWD CONTROL UNIT CONNECTOR A (20P)**

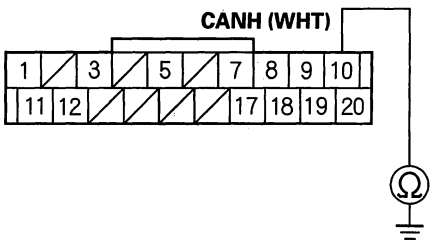


Wire side of female terminals

*Is there continuity?*

**YES**—
- With navigation system: Go to step 23.
- Without navigation system: Go to step 25.

**NO**—Repair open in the wire between the PCM (A36) and the SH-AWD control unit. ■

23. Check for continuity between navigation unit connector A (20P) terminal No. 8 and body ground.

**NAVIGATION UNIT CONNECTOR A (20P)**

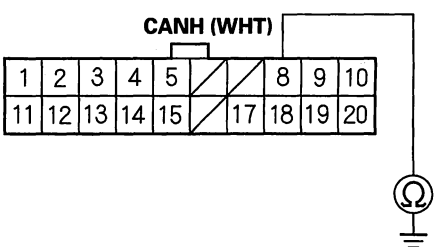


Wire side of female terminals

*Is there continuity?*

**YES**—
- With AcuraLink system: Go to step 24.
- Without AcuraLink system: Go to step 25.

**NO**—Repair open in the wire between the PCM (A36) and the navigation unit. ■

24. Check for continuity between AcuraLink control unit (XM receiver) connector A (20P) terminal No. 6 and body ground.

**ACURALINK CONTROL UNIT (XM RECEIVER) CONNECTOR A (20P)**

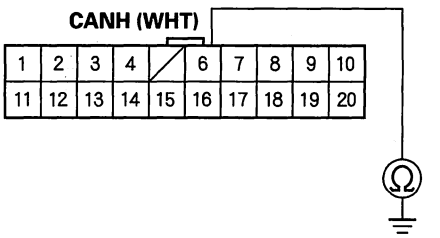


Wire side of female terminals

*Is there continuity?*

**YES**—Go to step 25.

**NO**—Repair open in the wire between the PCM (A36) and the AcuraLink control unit (XM receiver). ■

25. Remove the jumper wire from PCM connector A (44P).



BACK

Protected by AR

26. Connect PCM connector terminal A37 to body ground with a jumper wire.

**PCM CONNECTOR A (44P)**

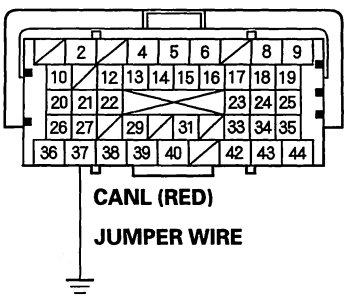


Terminal side of female terminals

27. Check for continuity between gauge control module 36P connector terminal No. 29 and body ground.

**GAUGE CONTROL MODULE 36P CONNECTOR**

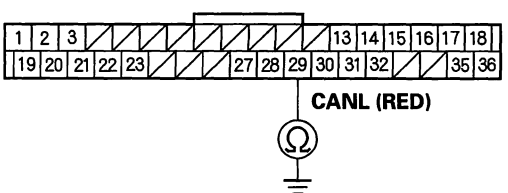


Wire side of female terminals

*Is there continuity?*

**YES**—Go to step 28.

**NO**—Repair open in the wire between the PCM (A37) and the gauge control module. ■

28. Check for continuity between VSA modulator-control unit 46P connector terminal No. 38 and body ground.

**VSA MODULATOR-CONTROL UNIT 46P CONNECTOR**

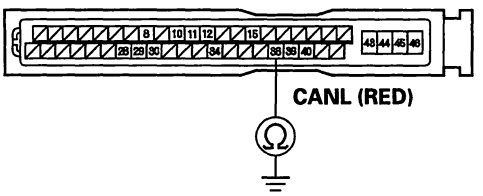


Wire side of female terminals

*Is there continuity?*

**YES**—Go to step 29.

**NO**—Repair open in the wire between the PCM (A37) and the VSA modulator-control unit. ■

(cont'd)

Protected by AR



## F-CAN Circuit Troubleshooting (Part 1) (cont'd)

29. Check for continuity between SRS unit connector A (28P) terminal No. 12 and body ground.

**SRS UNIT CONNECTOR A (28P)**

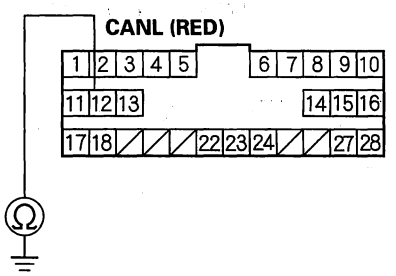


Wire side of female terminals

*Is there continuity?*

**YES**—Go to step 30.

**NO**—Repair open in the wire between the PCM (A37) and the SRS unit. ■

30. Check for continuity between steering angle sensor 5P connector terminal No. 2 and body ground.

**STEERING ANGLE SENSOR 5P CONNECTOR**

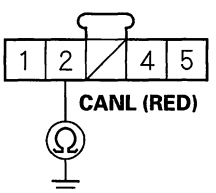


Wire side of female terminals

*Is there continuity?*

**YES**—Go to step 31.

**NO**—Repair open in the wire between the PCM connector (A37) and the steering angle sensor. ■

31. Check for continuity between yaw rate-lateral acceleration sensor 4P connector terminal No. 2 and body ground.

**YAW RATE-LATERAL ACCELERATION SENSOR 4P CONNECTOR**

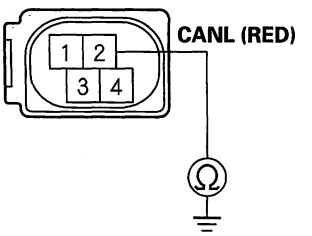


Wire side of female terminals

*Is there continuity?*

**YES**—Go to step 32.

**NO**—Repair open in the wire between the PCM (A37) and the yaw rate-lateral acceleration sensor. ■



BACK

Protected by AR

32. Check for continuity between TPMS control unit 20P connector terminal No. 11 and body ground.

**TPMS CONTROL UNIT 20P CONNECTOR**

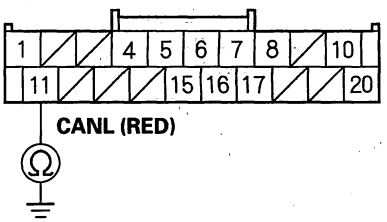


Wire side of female terminals

*Is there continuity?*

**YES**—Go to step 33.

**NO**—Repair open in the wire between the PCM (A37) and the TPMS control unit. ■

33. Check for continuity between SH-AWD control unit connector A (20P) terminal No. 20 and body ground.

**SH-AWD CONTROL UNIT CONNECTOR A (20P)**

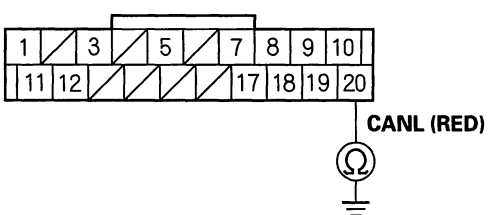


Wire side of female terminals

*Is there continuity?*

**YES**—
- With navigation system: Go to step 34.
- Without navigation system: Go to step 36.

**NO**—Repair open in the wire between the PCM (A37) and the SH-AWD control unit. ■

34. Check for continuity navigation unit connector A (20P) terminal No. 18 and body ground.

**NAVIGATION UNIT CONNECTOR A (20P)**

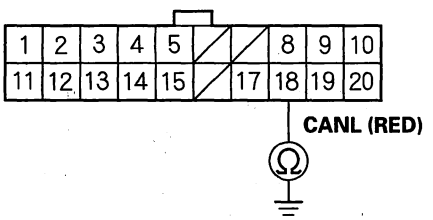


Wire side of female terminals

*Is there continuity?*

**YES**—
- With AcuraLink system: Go to step 35.
- Without AcuraLink system: Go to step 36.

**NO**—Repair open in the wire between the PCM (A37) and the navigation unit. ■

35. Check for continuity between AcuraLink control unit (XM receiver) connector A (20P) terminal No. 16 and body ground.

**ACURALINK CONTROL UNIT (XM RECEIVER) CONNECTOR A (20P)**

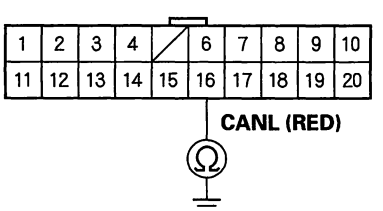


Wire side of female terminals

*Is there continuity?*

**YES**—Go to step 36.

**NO**—Repair open in the wire between the PCM (A37) and the AcuraLink control unit (XM receiver). ■

(cont'd)

Protected by AR



## F-CAN Circuit Troubleshooting (Part 1) (cont'd)

36. Reconnect the gauge control module 36P connector.

37. Measure resistance between PCM connector terminals A36 and A37.

**PCM CONNECTOR A (44P)**

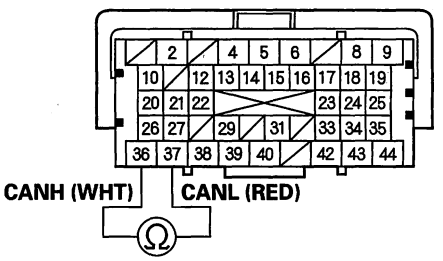


Terminal side of female terminals

*Is there about 108– 132 kΩ ?*

**YES**—Go to step 38.

**NO**—Substitute a known-good gauge control module (see page 22-284) and reconnect PCM connector A (44P). If the HDS identifies the vehicle, replace the original gauge control module (see page 22-284).■

38. Disconnect the gauge control module 36P connector (see page 22-284) and PCM connector A.

39. Reconnect the VSA modulator-control unit 46P connector.

40. Measure resistance between PCM connector terminals A36 and A37.

**PCM CONNECTOR A (44P)**

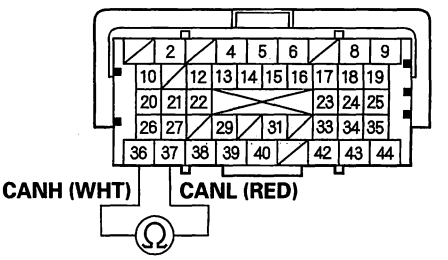


Terminal side of female terminals

*Is there about 2.34– 2.86 kΩ ?*

**YES**—Go to step 41.

**NO**—Substitute a known-good VSA modulator-control unit (see page 19-137) and reconnect PCM connector A (44P). If the HDS identifies the vehicle, replace the original VSA modulator-control unit (see page 19-137).■



BACK

Protected by AR

41. Disconnect the VSA modulator-control unit 46P connector (see page 19-137) and PCM connector A (44P).

42. Reconnect SRS unit connector A (28P).

43. Measure resistance between PCM connector terminals A36 and A37.

**PCM CONNECTOR A (44P)**

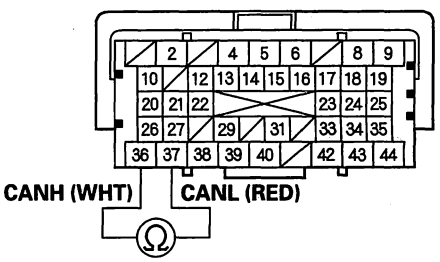


Terminal side of female terminals

*Is there about 2.34—2.86 kΩ ?*

**YES**—Go to step 44.

**NO**—Substitute a known-good SRS unit (see page 24-161) and reconnect PCM connector A (44P). If the HDS identifies the vehicle, replace the original SRS unit (see page 24-161).■

44. Disconnect SRS unit connector A (28P) (see step 12 on page 24-23) and PCM connector A (44P).

45. Reconnect TPMS control unit 20P connector.

46. Measure resistance between PCM connector terminals A36 and A37.

**PCM CONNECTOR A (44P)**

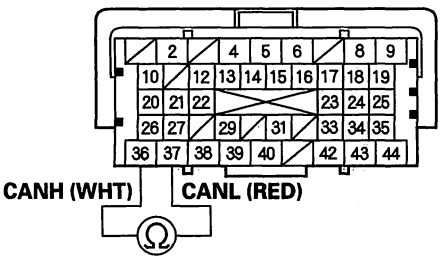


Terminal side of female terminals

*Is there about 2.34—2.86 kΩ ?*

**YES**—Go to step 47.

**NO**—Substitute a known-good TPMS control unit (see page 18-90) and reconnect PCM connector A (44P). If the HDS identifies the vehicle, replace the original TPMS control unit (see page 18-90).■

47. Disconnect the TPMS control unit 20P connector (see page 18-90) and PCM connector A (44P).

48. Reconnect SH-AWD control unit connector A (20P).

(cont'd)

Protected by AR



## F-CAN Circuit Troubleshooting (Part 1) (cont'd)

49. Measure resistance between PCM connector terminals A36 and A37.

**PCM CONNECTOR A (44P)**

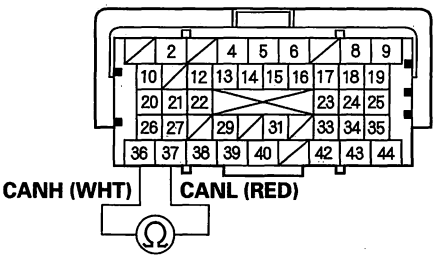


Terminal side of female terminals

*Is there about 2.34—2.86 kΩ ?*

**YES—**
- With navigation system: Go to step 50.
- Without navigation system: Update the PCM if it does not have the latest software (see page 11-7), or substitute a known-good PCM (see page 11-8), then recheck. If the symptom/indication goes away with a known-good PCM, replace the original PCM (see page 11-252).■

**NO—**Substitute a known-good SH-AWD control unit (see page 15-71) and reconnect PCM connector A (44P). If the HDS identifies the vehicle, replace the original SH-AWD control unit (see page 15-71). ■

50. Disconnect SH-AWD control unit connector A (20P) and PCM connector A (44P).

51. Reconnect navigation unit connector A (20P).

52. Measure resistance between PCM connector terminals A36 and A37.

**PCM CONNECTOR A (44P)**

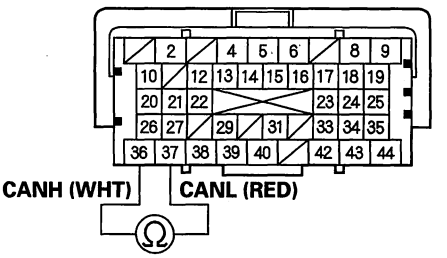


Terminal side of female terminals

*Is there about 2.34—2.86 kΩ ?*

**YES—**
- With AcuraLink system: Go to step 53.
- Without AcuraLink system: Update the PCM if it does not have the latest software (see page 11-7), or substitute a known-good PCM (see page 11-8), then recheck. If the symptom/indication goes away with a known-good PCM, replace the original PCM (see page 11-252).■

**NO—**Substitute a known-good navigation unit (see page 23-190) and reconnect PCM connector A (44P). If the HDS identifies the vehicle, replace the original navigation unit (see page 23-190).■

53. Disconnect navigation unit connector A (20P) (see page 23-190) and PCM connector A (44P).

54. Reconnect the AcuraLink control unit (XM receiver) connector A (20P).



BACK

Protected by AR

55. Measure resistance between PCM connector terminals A36 and A37.

**PCM CONNECTOR A (44P)**

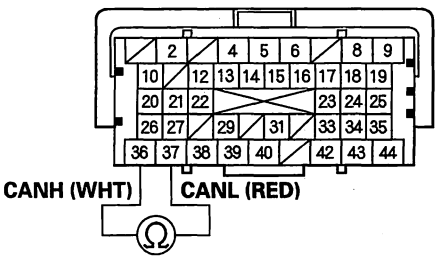


Terminal side of female terminals

*Is there about 2.34—2.86 kΩ ?*

**YES**—Update the PCM if it does not have the latest software (see page 11-7), or substitute a known-good PCM (see page 11-8), then recheck. If the symptom/indication goes away with a known-good PCM, replace the original PCM (see page 11-252). ■

**NO**—Substitute a known-good AcuraLink control unit (XM receiver) (see page 23-108) and reconnect PCM connector A (44P). If the HDS identifies the vehicle, replace the original AcuraLink control unit (XM receiver) (see page 23-108). ■

Protected by AR



## F-CAN Circuit Troubleshooting (Part 2)

1. Disconnect the gauge control module 36P connector (see page 22-284).
2. Disconnect the VSA modulator-control unit 46P connector (see page 19-137).
3. Disconnect SRS unit connector A (28P) (see step 14 on page 24-23).
4. Disconnect the steering angle sensor 5P connector (see page 19-134).
5. Disconnect the yaw rate-lateral acceleration sensor 4P connector (see page 19-135).
6. Disconnect TPMS control unit 20P connector (see page 18-90).
7. Disconnect SH-AWD control unit connector A (20P) (see page 15-71).
8. With navigation system: Disconnect navigation unit connector A (20P) (see page 23-190).
9. With ACURALINK system: Disconnect ACURALINK control unit (XM receiver) connector A (20P) (see page 23-108).
10. Check for continuity between PCM connector terminals A36 and body ground.

**PCM CONNECTOR A (44P)**

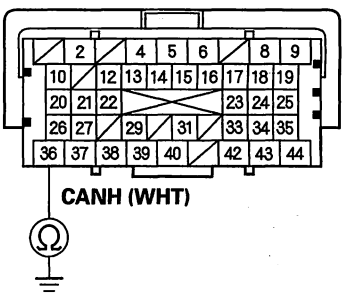


Terminal side of female terminals

*Is there continuity?*

**YES**—Repair short in the wire between PCM connector terminal A36 and the gauge control module, the VSA modulator-control unit, the SRS unit, the steering angle sensor, the yaw rate-lateral acceleration sensor, the TPMS control unit, the SH-AWD control unit, the navigation unit, the ACURALINK control unit (XM receiver), or the DLC. ■

**NO**—Go to step 11.



BACK

Protected by AR

11. Check for continuity between PCM connector terminal A37 and body ground.

**PCM CONNECTOR A (44P)**

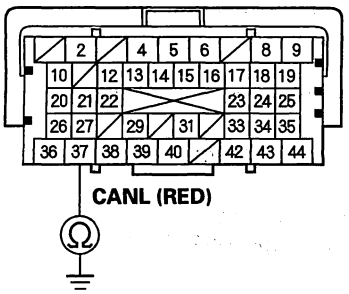


Terminal side of female terminals

*Is there continuity?*

**YES**—Repair short in the wire between PCM connector terminal A37 and the gauge control module, the VSA modulator-control unit, the SRS unit, the steering angle sensor, the yaw rate-lateral acceleration sensor, the TPMS control unit, the SH-AWD control unit, the navigation unit, the ACURALINK control unit (XM receiver), or the DLC. ■

**NO**—Go to step 12.

12. Reconnect all connectors.

13. Connect the HDS to the DLC (see page 11-3).

14. Disconnect the gauge control module 36P connector (see page 22-284).

15. Turn the ignition switch ON (II), and read the HDS.

    *Does the HDS identify the vehicle?*

    **YES**—Replace the gauge control module (see page 22-284). ■

    **NO**—Go to step 16.

16. Turn the ignition switch OFF.

17. Reconnect the gauge control module 36P connector.

18. Disconnect the VSA modulator-control unit 46P connector (see page 19-137).

19. Turn the ignition switch ON (II), and read the HDS.

    *Does the HDS identify the vehicle?*

    **YES**—Replace the VSA modulator-control unit (see page 19-137). ■

    **NO**—Go to step 20.

(cont'd)

Protected by AR



## F-CAN Circuit Troubleshooting (Part 2) (cont'd)

20. Turn the ignition switch OFF.
21. Reconnect the VSA modulator-control unit 46P connector.
22. Disconnect SRS unit connector A (28P) (see step 14 on page 24-23).
23. Turn the ignition switch ON (II), and read the HDS.

    *Does the HDS identify the vehicle?*

    **YES**—Replace the SRS unit (see page 24-161).■

    **NO**—Go to step 24.
24. Turn the ignition switch OFF.
25. Reconnect SRS unit connector A (28P).
26. Disconnect the steering angle sensor 5P connector (see page 19-134).
27. Turn the ignition switch ON (II), and read the HDS.

    *Does the HDS identify the vehicle?*

    **YES**—Replace the steering angle sensor (see page 19-134).■

    **NO**—Go to step 28.
28. Turn the ignition switch OFF.
29. Reconnect the steering angle sensor 5P connector.
30. Disconnect the yaw rate-lateral acceleration sensor 4P connector (see page 19-135).
31. Turn the ignition switch ON (II), and read the HDS.

    *Does the HDS identify the vehicle?*

    **YES**—Replace the yaw rate-lateral acceleration sensor (see page 19-135).■

    **NO**—Go to step 32.
32. Turn the ignition switch OFF.
33. Reconnect the yaw rate-lateral acceleration sensor.
34. Disconnect the TPMS control unit 20P connector (see page 18-90).
35. Turn the ignition switch ON (II), and read the HDS.

    *Does the HDS identify the vehicle?*

    **YES**—Replace the TPMS control unit (see page 18-90).■

    **NO**—Go to step 36.
36. Turn the ignition switch OFF.
37. Reconnect the TPMS control unit 20P connector.
38. Disconnect SH-AWD control unit connector A (20P) (see page 15-71).



BACK

Protected by AR

39. Turn the ignition switch ON (II), and read the HDS.

    *Does the HDS identify the vehicle?*

    **YES**—Replace the SH-AWD control unit (see page 15-71). ■

    **NO**—
    - With navigation system: Go to step 40.
    - Without navigation system: Update the PCM if it does not have the latest software (see page 11-7), or substitute a known-good PCM (see page 11-8), then recheck. If the symptom/indication goes away with a known-good PCM, replace the original PCM (see page 11-252). ■

40. Turn the ignition switch OFF.

41. Reconnect SH-AWD control unit connector A (20P).

42. Disconnect navigation unit connector A (20P) (see page 23-190).

43. Turn the ignition switch ON (II), and read the HDS.

    *Does the HDS identify the vehicle?*

    **YES**—Replace the navigation unit (see page 23-190). ■

    **NO**—
    - With ACURALINK system: Go to step 44.
    - Without ACURALINK system: Update the PCM if it does not have the latest software (see page 11-7), or substitute a known-good PCM (see page 11-8), then recheck. If the symptom/indication goes away with a known-good PCM, replace the original PCM (see page 11-252). ■

44. Turn the ignition switch OFF.

45. Reconnect navigation unit connector A (20P).

46. Disconnect the ACURALINK control unit (XM receiver) connector A (20P) (see page 23-108).

47. Turn the ignition switch ON (II), and read the HDS.

    *Does the HDS identify the vehicle?*

    **YES**—Replace the ACURALINK control unit (XM receiver) (see page 23-108). ■

    **NO**—Update the PCM if it does not have the latest software (see page 11-7), or substitute a known-good PCM (see page 11-8), then recheck. If the symptom/indication goes away with a known-good PCM, replace the original PCM (see page 11-252). ■

Protected by AR



## MIL Circuit Troubleshooting

1. Turn the ignition switch ON (II).

2. Do the gauge self-diagnostic function (see page 22-258).

   *Does the MIL indicator flash?*

   **YES**—Go to step 3.

   **NO**—Substitute a known-good gauge control module, and recheck. If the MIL circuit is OK, replace the original gauge control module (see page 22-284).■

3. Connect the HDS to the DLC (see page 11-3).

4. Check the SCS in the DATA LIST with the HDS.

   *Is a short indicated?*

   **YES**—Go to step 5.

   **NO**—Update the PCM if it does not have the latest software (see page 11-7), or substitute a known-good PCM (see page 11-8), then recheck. If the symptom/indication goes away with a known-good PCM, replace the original PCM (see page 11-252).■

5. Turn the ignition switch OFF.

6. Disconnect PCM connector A (44P), then disconnect the HDS.

7. Check for continuity between PCM connector terminal A31 and body ground.

**PCM CONNECTOR A (44P)**

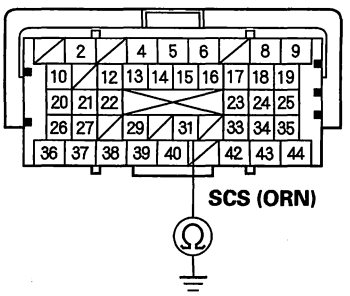


Terminal side of female terminals

*Is there continuity?*

**YES**—Repair short in the wire between the PCM (A31) and the SRS unit, or the DLC.■

**NO**—Update the PCM if it does not have the latest software (see page 11-7), or substitute a known-good PCM (see page 11-8), then recheck. If the symptom/indication goes away with a known-good PCM, replace the original PCM (see page 11-252).■



BACK

Protected by AR

## DLC Circuit Troubleshooting

NOTE: Make sure the HDS operates normally and the DLC cable is in good condition.

1. Turn the ignition switch OFF.

2. Connect the HDS to the DLC (see page 11-3).

   NOTE: Make sure the HDS is properly connected to the DLC.

3. Turn the ignition switch ON (II), and read the HDS.

   *Does the HDS identify the vehicle?*

   **YES**—Go to step 4.

   **NO**—Go to step 23.

4. Check for Temporary DTCs or DTCs in the PGM-FI system with the HDS.

   *Are any Temporary DTCs or DTCs indicated?*

   **YES**—Go to the indicated DTC's troubleshooting. ■

   **NO**—Go to step 5.

5. Turn the ignition switch OFF.

6. Turn the ignition switch ON (II), and watch the SRS indicator.

   *Does the SRS indicator stay on?*

   **YES**—Go to the SRS system's general troubleshooting information (see page 24-24). ■

   **NO**—Go to step 7.

7. Turn the ignition switch OFF.

8. Turn the ignition switch ON (II), and watch the VSA indicator.

   *Does the VSA indicator stay on?*

   **YES**—Go to the VSA system's general troubleshooting information (see page 19-83). ■

   **NO**—Go to step 9.

9. Turn the ignition switch OFF.

10. Turn the ignition switch ON (II), and watch the SH-AWD indicator.

    *Does the SH-AWD indicator stay on?*

    **YES**—Go to the SH-AWD system's general troubleshooting information (see page 15-4). ■

    **NO**—Go to step 11.

11. Turn the ignition switch OFF.

12. Turn the ignition switch ON (II), and watch the TPMS indicator.

    *Does the TPMS indicator stay on?*

    **YES**—Go to the TPMS general troubleshooting information (see page 18-53). ■

    **NO**—Go to step 13.

(cont'd)

Protected by AR



## DLC Circuit Troubleshooting (cont'd)

13. Turn the ignition switch OFF.

14. Turn the ignition switch ON (II), and watch the immobilizer indicator.

    *Does the immobilizer indicator stay on or flash?*

    **YES**—Check symptoms for the immobilizer system. ■

    **NO**—Go to step 15.

15. Do the gauge self-diagnostic function (see page 22-258).

16. Check for B-CAN system DTCs without the HDS (see page 22-93).

    *Are any B-CAN DTCs indicated?*

    **YES**—Go to the indicated DTC's troubleshooting. ■

    **NO**—Go to step 17.

17. Turn the ignition switch OFF.

18. Disconnect the HDS from the DLC.

19. Check for continuity between DLC terminal No. 7 and body ground.

**DATA LINK CONNECTOR (DLC)**

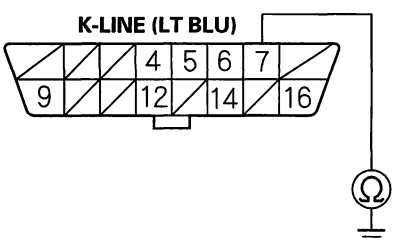


Terminal side of female terminals

*Is there 5 Ω or less?*

**YES**—Go to step 20.

**NO**—Go to step 21.

20. Continue to check for continuity between DLC terminal No. 7 and body ground, while disconnecting these parts, one at a time:

    - SRS unit connector A (28P)
    - VSA modulator-control unit 46P connector
    - SH-AWD control unit connector A (20P)
    - TPMS control unit 20P connector
    - Immobilizer-keyless control unit 7P connector
    - Audio unit 17P connector
    - Under-dash fuse/relay box (Q) (16P) connector

    *Does continuity go away when one of the above components is disconnected?*

    **YES**—Replace the part that caused an open when it was disconnected. ■

    **NO**—Repair short in the wire between the DLC (K-line) and the VSA modulator-control unit, the SRS unit, the SH-AWD control unit, the TPMS control unit, the immobilizer-keyless control unit, the audio unit, or the under-dash fuse/relay box. ■



BACK

Protected by AR

21. Connect DLC terminal No. 7 to body ground with a jumper wire.

**DATA LINK CONNECTOR (DLC)**

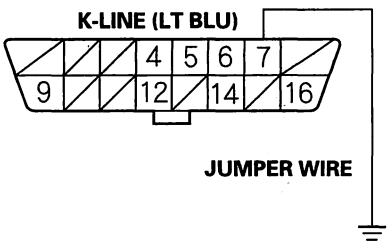


Terminal side of female terminals

22. Check for continuity between body ground and these connector terminals:

| Connector | Terminal |
|---|---|
| SRS unit A (28P) | No. 24 (LT BLU) |
| VSA modulator-control unit 46P | No. 15 (LT BLU) |
| SH-AWD control unit A (20P) | No. 5 (LT BLU) |
| TPMS control unit (20P) | No. 7 (LT BLU) |
| Immobilizer-keyless control unit 7P | No. 5 (LT BLU) |
| Audio unit 17P | No. 6 (LT BLU) |
| Under-dash fuse/relay box (Q) (16P) | No. 8 (LT BLU) |

*Is there continuity between the DLC terminal and each of the terminals in the chart?*

**YES**—Replace the unit which cannot communicate with the HDS.■

**NO**—Repair open in the wire between the DLC (K-line) and the appropriate connector.■

23. Do the gauge self-diagnostic function (see page 22-258).

24. Check for B-CAN system DTCs without the HDS (see page 22-93).

*Is DTC B1168, B1169, and/or B1178 indicated?*

**YES**—Go to step 37.

**NO**—Go to step 25.

25. Turn the ignition switch OFF.

26. Disconnect the HDS from the DLC.

27. Measure voltage between DLC terminal No. 16 and body ground.

**DATA LINK CONNECTOR (DLC)**

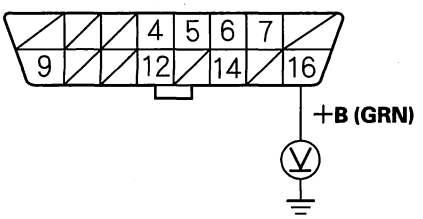


Terminal side of female terminals

*Is there battery voltage?*

**YES**—Go to step 28.

**NO**—Repair open in the wire between DLC terminal No. 16 and the No. 19 FI MAIN (15 A) fuse in the under-hood fuse/relay box.■

(cont'd)

Protected by AR



## DLC Circuit Troubleshooting (cont'd)

28. Measure voltage between DLC terminals No. 4 and No. 16.

DATA LINK CONNECTOR (DLC)

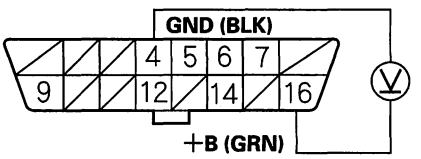


Terminal side of female terminals

*Is there battery voltage?*

**YES**—Go to step 29.

**NO**—Repair open in the wire between DLC terminal No. 4 and body ground (G501) (see page 22-28).■

29. Connect the HDS to the DLC (see page 11-3).

30. Jump the SCS line with the HDS.

31. Disconnect PCM connector A (44P).

32. Disconnect the HDS from the DLC.

33. Connect DLC terminal No. 6 to body ground with a jumper wire.

DATA LINK CONNECTOR (DLC)

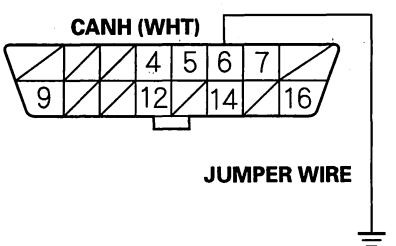


Terminal side of female terminals

34. Check for continuity between PCM connector terminal A36 and body ground.

PCM CONNECTOR A (44P)

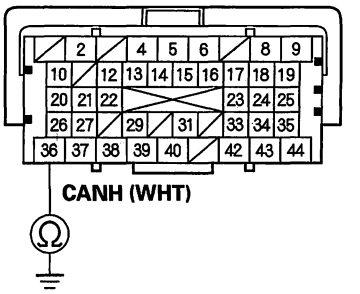


Terminal side of female terminals

*Is there continuity?*

**YES**—Go to step 35.

**NO**—Repair open in the wire between the PCM (A36) and DLC terminal No. 6.■

35. Connect DLC terminal No. 14 to body ground with a jumper wire.

DATA LINK CONNECTOR (DLC)

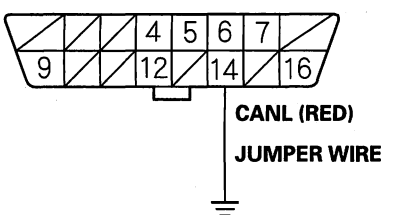


Terminal side of female terminals



BACK

Protected by AR

36. Check for continuity between PCM connector terminal A37 and body ground.

**PCM CONNECTOR A (44P)**

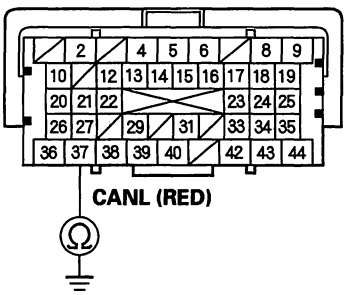


Terminal side of female terminals

*Is there continuity?*

**YES**—Update the PCM if it does not have the latest software (see page 11-7), or substitute a known-good PCM (see page 11-8), then recheck. If the symptom/indication goes away with a known-good PCM, replace the original PCM (see page 11-252).■

**NO**—Repair open in the wire between the PCM (A37) and DLC terminal No. 14.■

37. Try to start the engine.

*Does the engine start and idle smoothly?*

**YES**—Go to F-CAN circuit troubleshooting (Part 1) (see page 11-213).■

**NO**—Go to step 38.

38. Turn the ignition switch OFF.

39. Check the No. 2 IG MAIN (50 A) fuse in the under-hood fuse/relay box.

*Is the fuse OK?*

**YES**—Repair open in the wire between the No. 2 IG MAIN (50 A) fuse and the ignition switch. If the wire is OK, go to step 40.

**NO**—Repair short in the wire between the No. 2 IG MAIN (50 A) fuse and the under-hood fuse/relay box. Also replace the No. 2 IG MAIN (50 A) fuse.■

(cont'd)

Protected by AR



## DLC Circuit Troubleshooting (cont'd)

40. Inspect the No. 19 FI MAIN (15 A) fuse in the under-hood fuse/relay box.

    *Is the fuse OK?*

    **YES**—Go to step 47.

    **NO**—Go to step 41.

41. Remove the blown No. 19 FI MAIN (15 A) fuse from the under-hood fuse/relay box.

42. Remove PGM-FI main relay 1 (C) from the under-hood fuse/relay box.

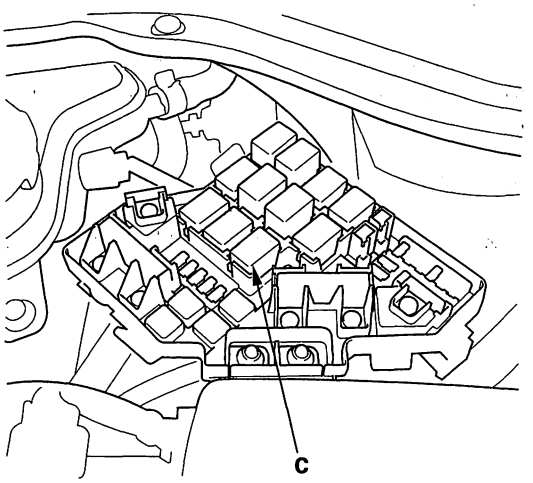


43. Check for continuity between body ground and PGM-FI main relay 1 4P connector terminals No. 1 and No. 3 individually.

**PGM-FI MAIN RELAY 1 4P CONNECTOR**

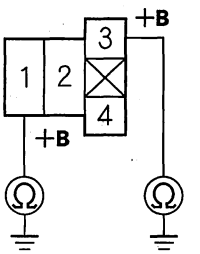


Terminal side of female terminals

*Is there continuity?*

**YES**—Replace the under-hood fuse/relay box (see page 22-61). Also replace the No. 19 FI MAIN (15 A) fuse.■

**NO**—Go to step 44.



BACK

Protected by AR

44. Disconnect each of the following components, or the connectors from the components, one at a time, and check for continuity between PGM-FI main relay 1 4P connector terminal No. 2 and body ground.

- PGM-FI main relay 2 (FUEL PUMP)
- PCM connector A (44P)
- Each injector 2P connector
- Camshaft position (CMP) sensor B 3P connector
- Crankshaft position (CKP) sensor 3P connector
- Electronic throttle control system (ETCS) control relay

**PGM-FI MAIN RELAY 1 4P CONNECTOR**

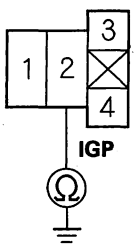


Terminal side of female terminals

*Does continuity go away when one of the above components is disconnected?*

**YES**—Replace the component that made the short to body ground go away when disconnected. If the item is the PCM, update the PCM if it does not have the latest software (see page 11-7), or substitute a known-good PCM (see page 11-8), then recheck. If the symptom/indication goes away with a known-good PCM, replace the original PCM (see page 11-252). Also replace the No. 19 FI MAIN (15 A) fuse.■

**NO**—Go to step 45.

45. Disconnect the connectors from these components:

- PGM-FI main relay 2 (FUEL PUMP)
- PCM connector A (44P)
- Injectors
- Camshaft position (CMP) sensor B
- Crankshaft position (CKP) sensor
- Electronic throttle control system (ETCS) control relay

46. Check for continuity between PGM-FI main relay 1 4P connector terminal No. 2 and body ground.

**PGM-FI MAIN RELAY 1 4P CONNECTOR**

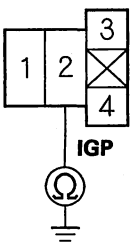


Terminal side of female terminals

*Is there continuity?*

**YES**—Repair short in the wire between PGM-FI main relay 1 and each item. Also replace the No. 19 FI MAIN (15 A) fuse.■

**NO**—Replace PGM-FI main relay 1. Also replace the No. 19 FI MAIN (15 A) fuse.■

47. Inspect the No. 2 FUEL PUMP (20 A) fuse in the under-dash fuse/relay box.

*Is the fuse OK?*

**YES**—Go to step 54.

**NO**—Go to step 48.

48. Remove the blown No. 2 FUEL PUMP (20 A) fuse from the under-dash fuse/relay box.

49. Jump the SCS line with the HDS.

50. Disconnect PCM connector C (44P).

(cont'd)

Protected by AR



## DLC Circuit Troubleshooting (cont'd)

51. Check for continuity between PCM connector terminal C36 and body ground.

PCM CONNECTOR C (44P)

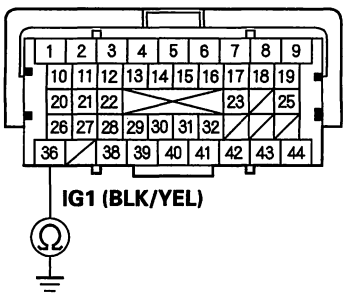


Terminal side of female terminals

*Is there continuity?*

**YES**—Go to step 52.

**NO**—Replace the No. 2 FUEL PUMP (20 A) fuse, and update the PCM if it does not have the latest software (see page 11-7), or substitute a known-good PCM (see page 11-8), then recheck. If the symptom/indication goes away with a known-good PCM, replace the original PCM (see page 11-252).■

52. Remove the driver's dashboard undercover (see page 20-102), then remove PGM-FI main relay 2 (FUEL PUMP) (A) from the under-dash fuse/relay box.

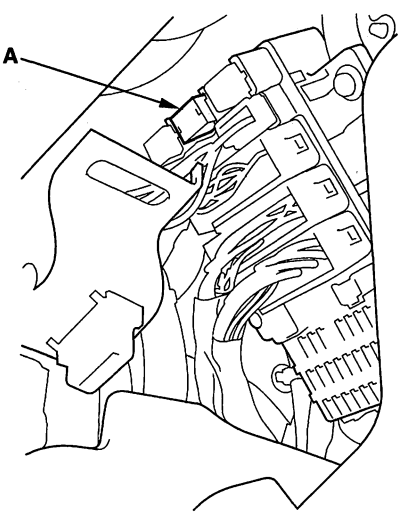


53. Check for continuity between PCM connector terminal C36 and body ground.

PCM CONNECTOR C (44P)

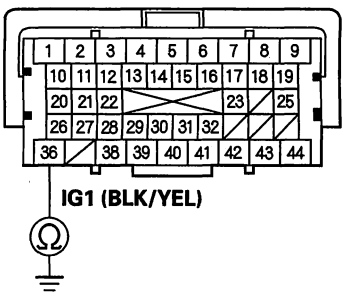


Terminal side of female terminals

*Is there continuity?*

**YES**—Repair short in the wire between the No. 2 FUEL PUMP (20 A) fuse and the PCM (C36), between the No. 2 FUEL PUMP (20 A) fuse and PGM-FI main relay 2 (FUEL PUMP), or between the No. 2 FUEL PUMP (20 A) fuse and the immobilizer control unit. Also replace the No. 2 FUEL PUMP (20 A) fuse.■

**NO**—Go to step 54.

54. Jump the SCS line with the HDS.

55. Disconnect PCM connectors A (44P) and C (44P).

56. Turn the ignition switch ON (II).



BACK

Protected by AR

57. Measure voltage between PCM connector terminal C36 and body ground.

**PCM CONNECTOR C (44P)**

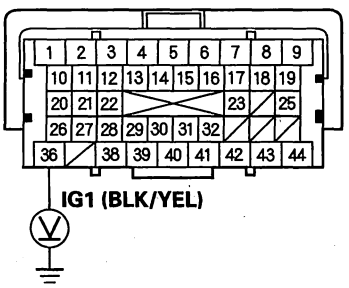


Terminal side of female terminals

*Is there battery voltage?*

**YES**—Go to step 58.

**NO**—Repair open in the wire between the No. 2 FUEL PUMP (20 A) fuse and the PCM (C36). ■

58. Measure voltage between PCM connector terminal A6 and body ground.

**PCM CONNECTOR A (44P)**

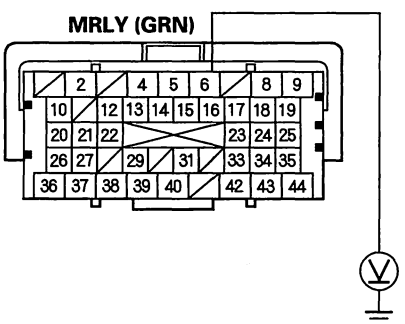


Terminal side of female terminals

*Is there battery voltage?*

**YES**—Go to step 63.

**NO**—Go to step 59.

59. Turn the ignition switch OFF.

60. Remove PGM-FI main relay 1 (C) from the under-hood fuse/relay box.

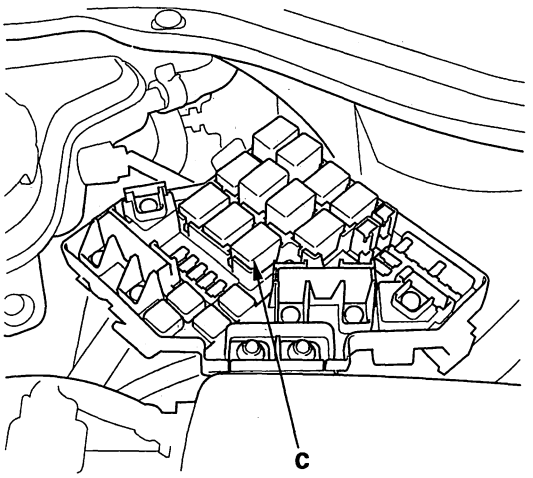


61. Measure voltage between PGM-FI main relay 1 4P connector terminal No. 3 and body ground.

**PGM-FI MAIN RELAY 1 4P CONNECTOR**

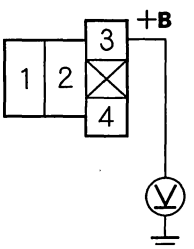


Terminal side of female terminals

*Is there battery voltage?*

**YES**—Go to step 62.

**NO**—Replace the under-hood fuse/relay box (see page 22-61). ■

(cont'd)

Protected by AR



## DLC Circuit Troubleshooting (cont'd)

62. Check for continuity between PGM-FI main relay 1 4P connector terminal No. 4 and PCM connector terminal A6.

**PGM-FI MAIN RELAY 1 4P CONNECTOR**

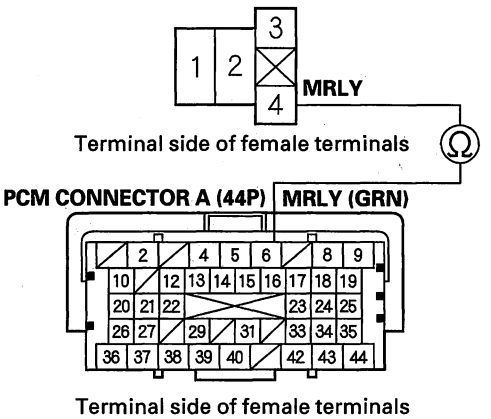


*Is there continuity?*

**YES**—Test PGM-FI main relay 1 (see page 22-64). If the relay is OK, update the PCM if it does not have the latest software (see page 11-7), or substitute a known-good PCM (see page 11-8), then recheck. If the symptom/indication goes away with a known-good PCM, replace the original PCM (see page 11-252).■

**NO**—Repair open in the wire between the PCM (A6) and PGM-FI main relay 1.■

63. Turn the ignition switch OFF.

64. Remove PGM-FI main relay 1 (C) from the under-hood fuse/relay box.

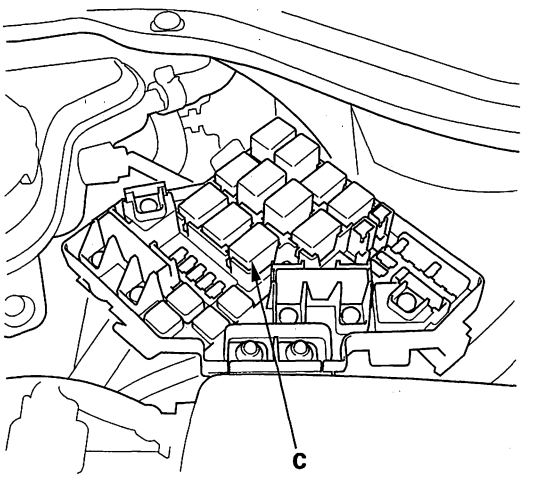


65. Measure voltage between PGM-FI main relay 1 4P connector terminal No. 1 and body ground.

**PGM-FI MAIN RELAY 1 4P CONNECTOR**

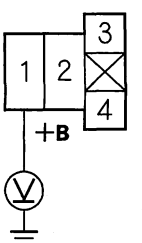


Terminal side of female terminals

*Is there battery voltage?*

**YES**—Go to step 66.

**NO**—Replace the under-hood fuse/relay box (see page 22-61).■



BACK

Protected by AR

66. Check for continuity between PGM-FI main relay 1 4P connector terminal No. 2 and PCM connector terminal A8.

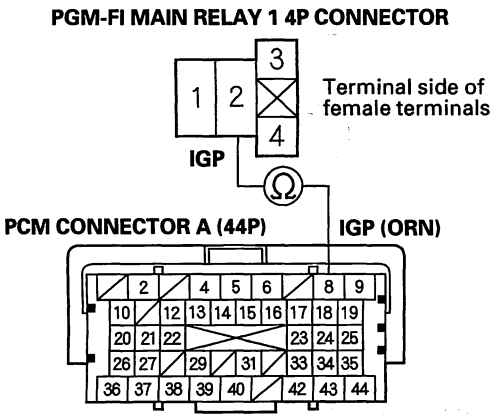


*Is there continuity?*

**YES**—Go to step 67.

**NO**—Repair open in the wire between the PCM (A8) and PGM-FI main relay 1.■

67. Test PGM-FI main relay 1 (see page 22-64).

*Is PGM-FI main relay 1 OK?*

**YES**—Go to step 68.

**NO**—Replace PGM-FI main relay 1.■

68. Disconnect PCM connector B (44P).

69. Check for continuity between body ground and PCM connector terminals B1, B36, C2, C40, and C44 individually.

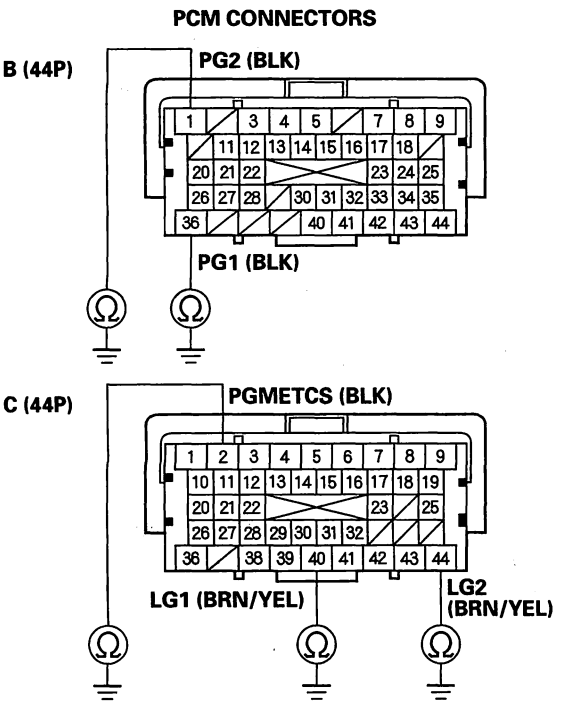


*Is there continuity?*

**YES**—Go to step 70.

**NO**—Repair open in the wire between the PCM (B1, B36, C2, C40, C44) and G101 (see page 22-18).■

(cont'd)

Protected by AR



## DLC Circuit Troubleshooting (cont'd)

70. Check for continuity between PCM connector terminal C13 and body ground.

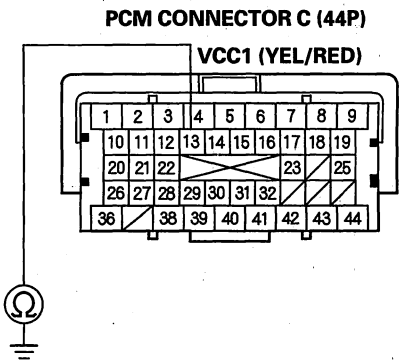


Terminal side of female terminals

*Is there continuity?*

**YES**—Go to step 71.

**NO**—Go to step 72.

71. Continue to check for continuity between PCM connector terminal C13 and body ground, while disconnecting these parts, one at a time:

- MAP sensor 3P connector
- Input shaft (mainshaft) speed sensor 3P connector

*Does continuity go away when one of the above components is disconnected?*

**YES**—Replace the part that caused an open when it was disconnected. ■

**NO**—Repair short in the wire between the PCM (C13) and the MAP sensor or the input shaft (mainshaft) speed sensor. ■

72. Check for continuity between PCM connector terminal B18 and body ground.

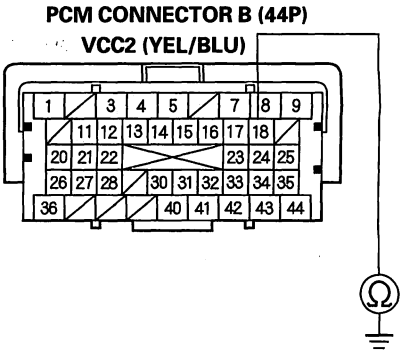


Terminal side of female terminals

*Is there continuity?*

**YES**—Go to step 73.

**NO**—Go to step 74.

73. Continue to check for continuity between PCM connector terminal B18 and body ground, while disconnecting these parts, one at a time:

- Turbocharger boost sensor 3P connector
- Output shaft (countershaft) speed sensor 3P connector

*Does continuity go away when one of the above components is disconnected?*

**YES**—Replace the part that caused an open when it was disconnected. ■

**NO**—Repair short in the wire between the PCM (B18) and the turbocharger boost sensor or the output shaft (countershaft) speed sensor. ■



BACK

Protected by AR

74. Check for continuity between PCM connector terminal C12 and body ground.

**PCM CONNECTOR C (44P)**

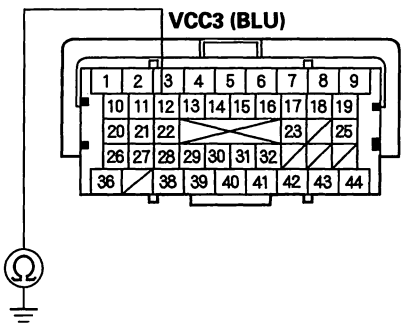


Terminal side of female terminals

*Is there continuity?*

**YES**—Go to step 75.

**NO**—Go to step 76.

75. Continue to check for continuity between PCM connector terminal C12 and body ground, while disconnecting the throttle body 6P connector.

*Is there continuity?*

**YES**—Repair short in the wire between the PCM (C12) and the throttle body. ■

**NO**—Replace the throttle body (see page 11-396). ■

76. Check for continuity between PCM connector terminal A25 and body ground.

**PCM CONNECTOR A (44P)**

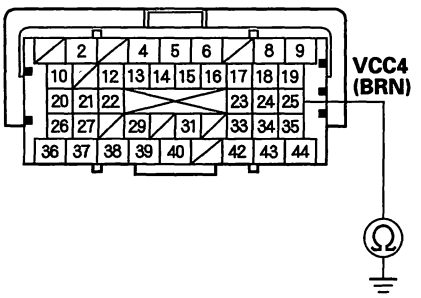


Terminal side of female terminals

*Is there continuity?*

**YES**—Go to step 77.

**NO**—Go to step 78.

77. Continue to check for continuity between PCM connector terminal A25 and body ground, while disconnecting the APP sensor 6P connector.

*Is there continuity?*

**YES**—Repair short in the wire between the PCM (A25) and APP sensor A. ■

**NO**—Replace the accelerator pedal module (see page 11-295). ■

(cont'd)

Protected by AR



## DLC Circuit Troubleshooting (cont'd)

78. Check for continuity between PCM connector terminal A24 and body ground.

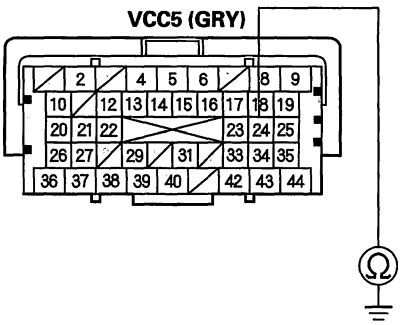


Terminal side of female terminals

*Is there continuity?*

**YES**—Go to step 79.

**NO**—Go to step 80.

79. Continue to check for continuity between PCM connector terminal A24 and body ground, while disconnecting the APP sensor 6P connector.

*Is there continuity?*

**YES**—Repair short in the wire between the PCM (A24) and APP sensor B.■

**NO**—Replace the accelerator pedal module (see page 11-295).■

80. Check for continuity between PCM connector terminal A19 and body ground.

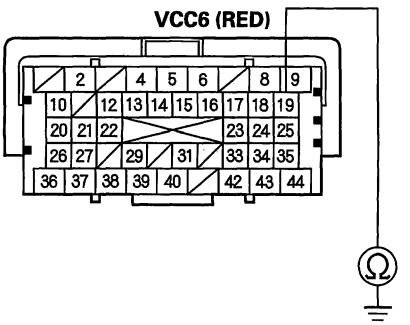


Terminal side of female terminals

*Is there continuity?*

**YES**—Go to step 81.

**NO**—Update the PCM if it does not have the latest software (see page 11-7), or substitute a known-good PCM (see page 11-8), then recheck. If the symptom/indication goes away with a known-good PCM, replace the original PCM (see page 11-252).■

81. Continue to check for continuity between PCM connector terminal A19 and body ground, while disconnecting these parts, one at a time:

- A/C pressure sensor 3P connector
- FTP sensor 3P connector
- Brake booster pressure sensor 3P connector

*Does continuity go away when one of the above components is disconnected?*

**YES**—Replace the part that caused an open when it was disconnected.■

**NO**—Repair short in the wire between the PCM (A19) and the A/C pressure sensor, the FTP sensor or the brake booster pressure sensor.■



BACK

Protected by AR

## Injector Replacement

1. Relieve fuel pressure (see page 11-362).
2. Remove the charge air cooler (see page 9-7).
3. Disconnect the throttle body 6P connector, then remove the injector cover (A).
4. Disconnect the connectors (B) from the injectors, then remove the harness holder (C) from the fuel rail (D).

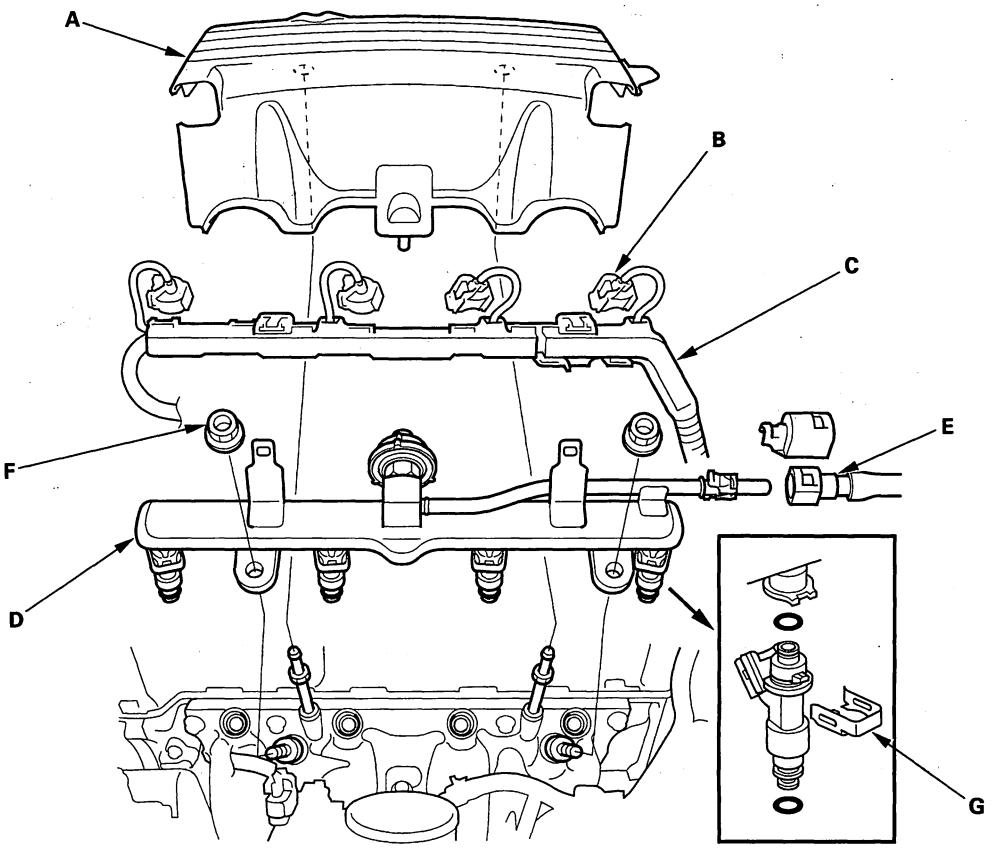


5. Disconnect the quick-connect fitting (E).
6. Remove the fuel rail mounting nuts (F), then remove the fuel rail.
7. Remove the injector clip (G) from the injector.
8. Remove the injector from the fuel rail.

(cont'd)

Protected by AR



## Injector Replacement (cont'd)

9. Coat the new O-ring (black) (A) with clean engine oil, then insert the injectors (B) into the fuel rail (C).

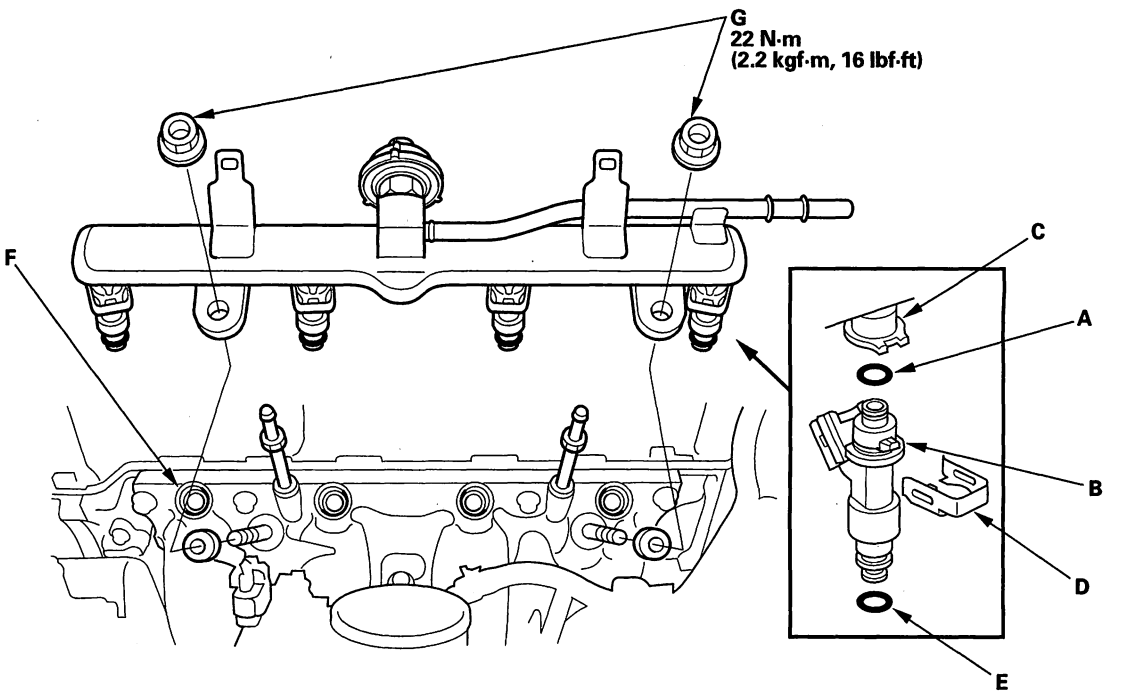


10. Install the injector clip (D).

11. Coat the new O-ring (green) (E) with clean engine oil, then install the fuel rail and injectors in the injector base (F).

12. Install the fuel rail mounting nuts (G).

13. Connect the connectors on the injectors, and install the harness holder on the fuel rail.

14. Connect the quick-connect fitting.

15. Turn the ignition switch ON (II), but do not operate the starter. After the fuel pump runs for about 2 seconds, the fuel rail will be pressurized. Repeat this two or three times, then check for fuel leakage.

    NOTE: Some DTCs will be stored because some connectors are disconnected at this time. Clear the DTC with the HDS after this procedure is completed.

16. Reinstall the injector cover and connect the throttle body 6P connector.

17. Reinstall the charge air cooler (see page 9-9).



BACK

Protected by AR

## A/F Sensor Replacement

**Special Tools Required**
O2 sensor socket wrench, Snap-on S6154, or equivalent, commercially available

1. Disconnect the A/F sensor 4P connector (A), then remove the A/F sensor (B).

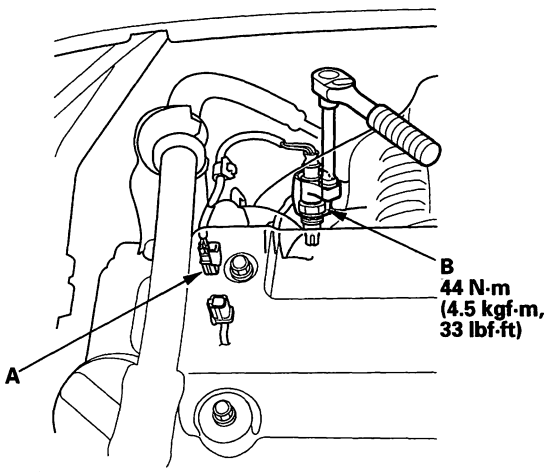


2. Install the parts in the reverse order of removal.

## Secondary HO2S Replacement

**Special Tools Required**
O2 sensor socket wrench, Snap-on YA8875, SP Tools 93750, or equivalent, commercially available

1. Remove the WU-TWC stay (A).

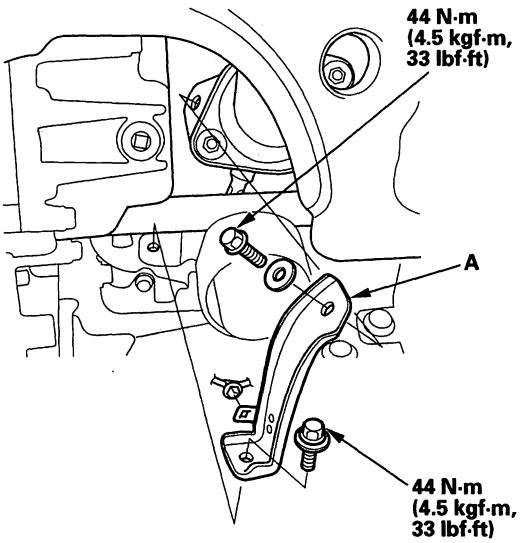


2. Disconnect the secondary HO2S 4P connector (A), then remove the secondary HO2S (B).

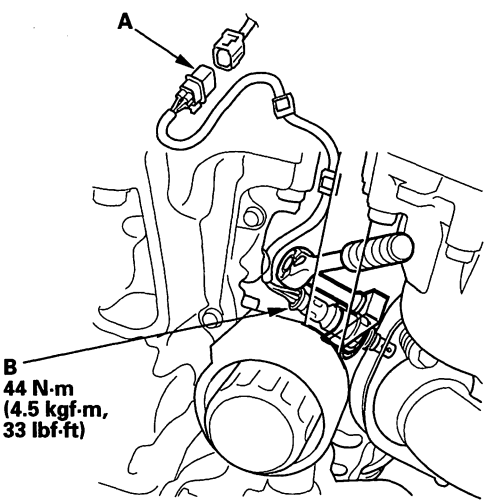


3. Install the parts in the reverse order of removal.

Protected by AR



## CMP Sensor B Replacement

1. Remove the air cleaner (see page 11-394).
2. Remove the air bypass outlet pipe (see page 9-7).
3. Disconnect the CMP sensor B connector (A).

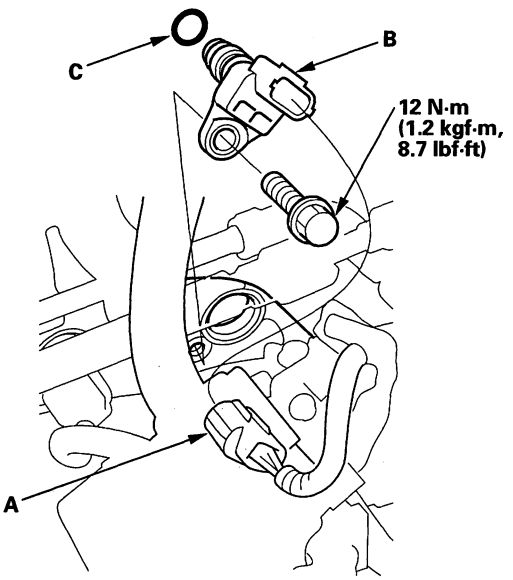


4. Remove CMP sensor B (B).
5. Install the parts in the reverse order of removal with a new O-ring (C).

## CKP Sensor Replacement

1. Disconnect the CKP sensor connector (A).

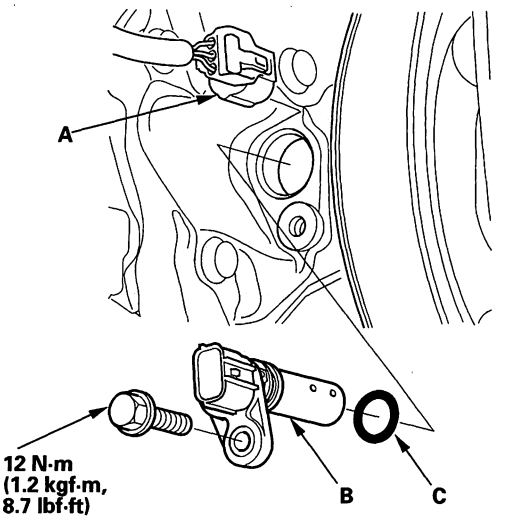


2. Remove the CKP sensor (B).
3. Install the parts in the reverse order of removal with a new O-ring (C).
4. Do the CKP pattern clear/CKP pattern learn procedure with the HDS (see page 11-4).



BACK

Protected by AR

## MAP Sensor Replacement

1. Disconnect the MAP sensor connector (A).

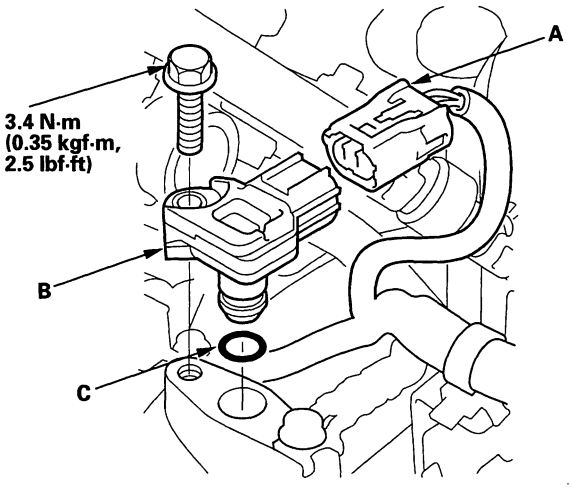


2. Remove the MAP sensor (B).
3. Install the parts in the reverse order of removal with a new O-ring (C).

## MAF Sensor/IAT Sensor 1 Replacement

1. Disconnect the MAF sensor/IAT sensor 1 connector (A).

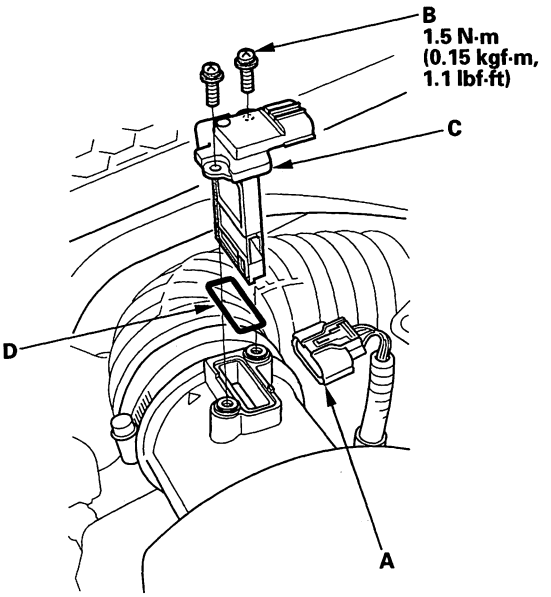


2. Remove the screws (B).
3. Remove the MAF sensor/IAT sensor 1 (C).
4. Install the parts in the reverse order of removal with a new O-ring (D).

Protected by AR



## IAT Sensor 2 Replacement

1. Remove the charge air cooler cover (see page 9-8).
2. Disconnect the IAT sensor 2 connector (A).

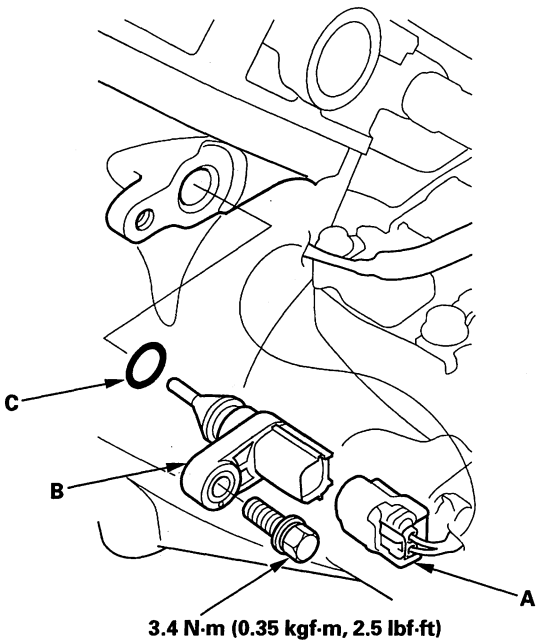


3. Remove the IAT sensor 2 (B).
4. Install the parts in the reverse order of removal with a new O-ring (C).



BACK

Protected by AR

## ECT Sensor 1 Replacement

1. Drain the engine coolant (see page 10-7).
2. Remove the air cleaner (see page 11-394).
3. Remove the charge air cooler (see page 9-8).
4. Remove the ignition coil cover (A) and bolt (B).

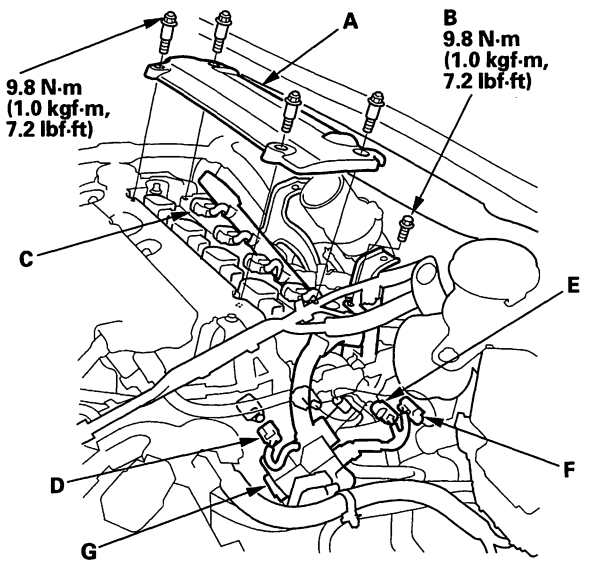


5. Disconnect the ignition coil connectors (C), CMP sensor A connector (D), CMP sensor B connector (E), and the EVAP canister purge valve connector (F).
6. Remove the harness holder (G).

   NOTE: Be careful not to damage the ECT sensor 1 harness.

7. Disconnect the ECT sensor 1 connector (A).

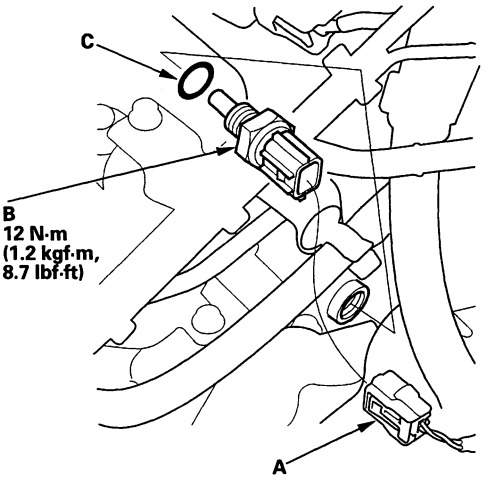


8. Remove ECT sensor 1 (B).
9. Install the parts in the reverse order of removal with a new O-ring (C), then refill the radiator with engine coolant (see page 10-7).

Protected by AR



## ECT Sensor 2 Replacement

1. Drain the engine coolant (see page 10-7).
2. Remove the splash shield.
3. Disconnect the ECT sensor 2 connector (A), then remove ECT sensor 2 (B).

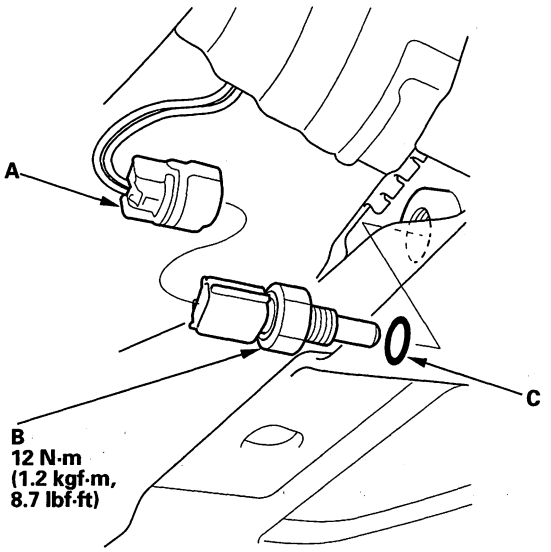


4. Install ECT sensor 2 with a new O-ring (C).
5. Install the splash shield.
6. Refill the radiator with engine coolant (see page 10-7).

## Knock Sensor Replacement

1. Disconnect the knock sensor connector (A).

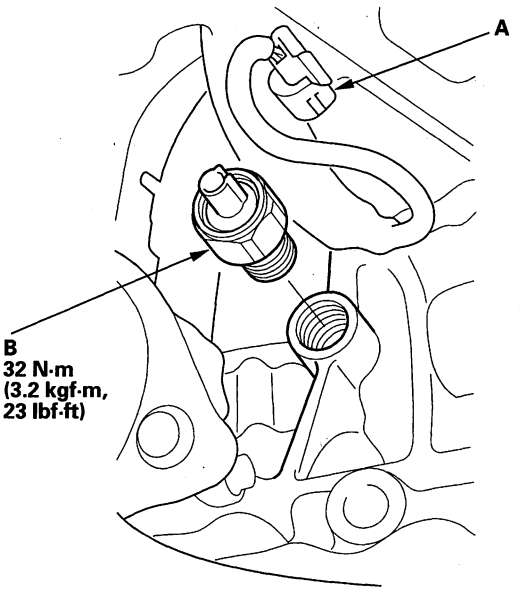


2. Remove the knock sensor (B).
3. Install the parts in the reverse order of removal.



BACK

Protected by AR

## ELD Replacement

1. Remove the under-hood fuse/relay box (see page 22-61).

2. Remove the screw (A).

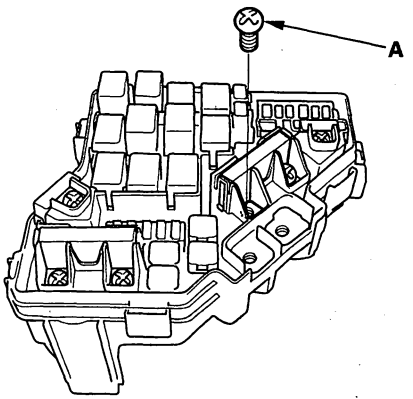


3. Turn the housing over, then remove the screw (A).

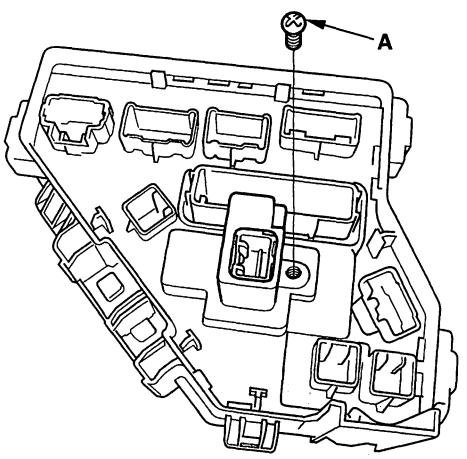


4. Turn the housing over again. Using two flat-tip screwdrivers, release the tabs (A), and pry up the fuse/relay box base (B) from the fuse/relay box housing (C).

   NOTE: Make sure the terminals (D) are not bent or damaged.

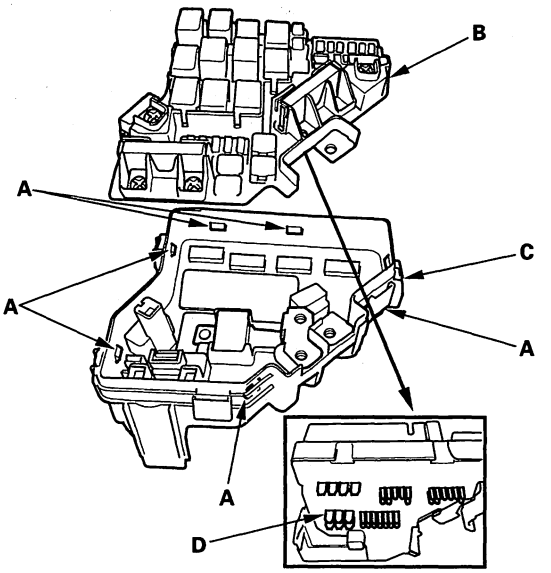


5. Remove the ELD (A).

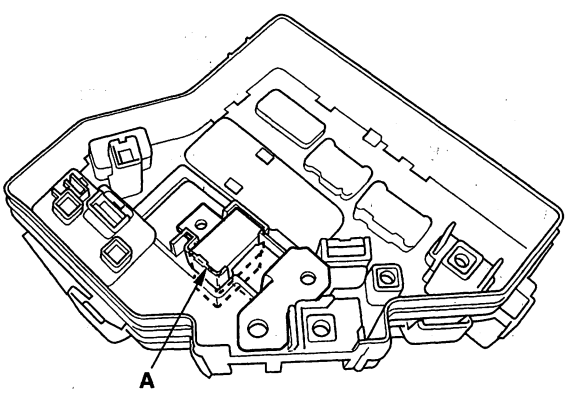


6. Install the parts in the reverse order of removal.

Protected by AR



## PCM Replacement

NOTE:
- Make sure the HDS is loaded with the latest software version.
- If you are replacing the PCM after substituting a known-good PCM, reinstall the original PCM, then do this procedure.
- During the procedure, if any READ DATA, WRITE DATA, or other data checks fail, note the failure, then continue.

1. Connect the HDS to the data link connector (DLC) (A) located under the driver's side of the dashboard.

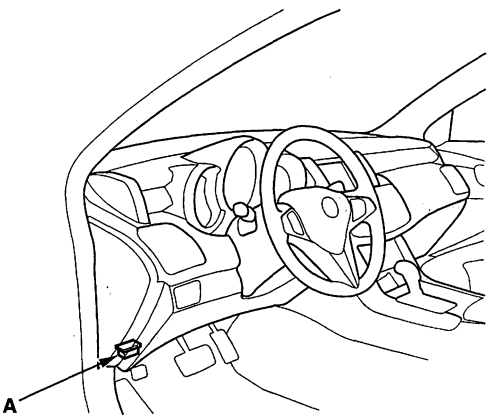


2. Turn the ignition switch ON (II).

3. Make sure the HDS communicates with the PCM. If it doesn't, go to the DLC circuit troubleshooting (see page 11-229). If you are returning from DLC circuit troubleshooting, skip steps 4 through 7, 16 through 18, and 21 through 22, and do the following procedures after replacing the PCM (USA, Canada models);

   - Replace the engine oil (see page 8-9) and the engine oil filter (see page 8-10).
   - Clean the throttle body (see page 11-394).

4. USA, Canada models: Select the PGM-FI system with the HDS.

5. USA, Canada models: Select the INSPECTION MENU with the HDS.

6. USA, Canada models: Select the ETCS TEST, then select the TP POSITION CHECK, and follow the screen prompts.

   NOTE: If the TP POSITION CHECK indicates FAILED, continue with this procedure.

7. USA, Canada models: Select the REPLACE PCM MENU, then READ DATA and follow the screen prompts.

   NOTE:
   - Doing this step copies (READS) the engine oil life data from the original PCM so you can later download (WRITES) it into the new PCM.
   - If READ DATA indicates FAILED, continue with this procedure.

8. Turn the ignition switch OFF.

9. Jump the SCS line with the HDS.

10. Disconnect PCM connectors A, B, and C.

    NOTE: PCM connectors A, B, and C have symbols (A=□, B=△, C=○) embossed on them for identification.

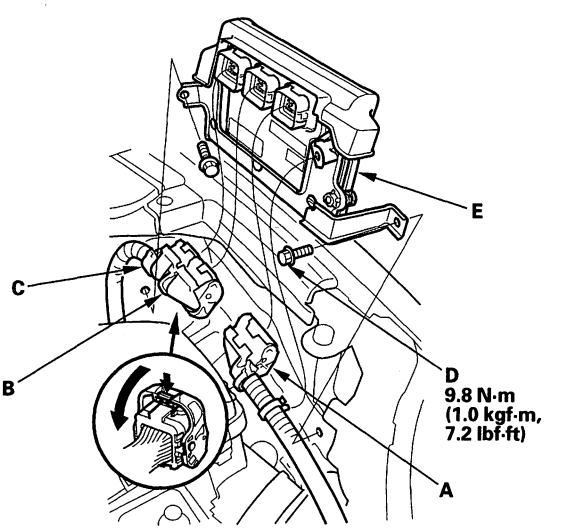


11. Remove the bolt (D), and remove the PCM assembly (E).



BACK

Protected by AR

12. Remove the cover (A), and the bracket (B) from the PCM (C).

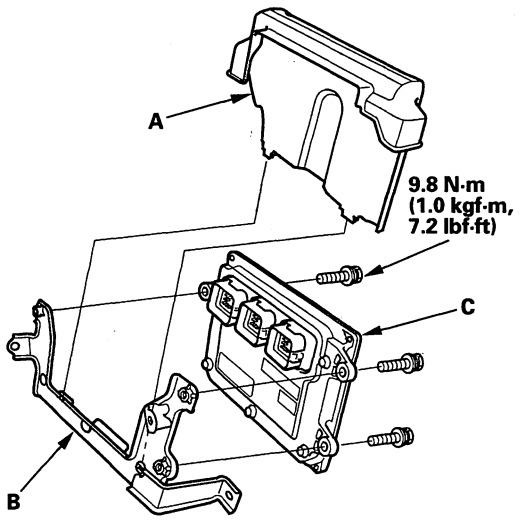


13. Install the PCM in the reverse order of removal.

14. Turn the ignition switch ON (II).

15. Manually input the VIN to the PCM with the HDS.

    NOTE: DTC P0630 "VIN Not Programmed or Mismatch" may be stored because the VIN has not been programmed into the PCM; ignore it, and continue this procedure.

16. USA, Canada models: If the READ DATA (engine oil life) failed in step 7, go to step 19. Otherwise, go to step 17.

17. USA, Canada models: Select the PGM-FI system with the HDS.

18. USA, Canada models: Select the REPLACE PCM MENU, then WRITE DATA and follow the screen prompts.

    NOTE: If the WRITE DATA indicates FAILED, continue with this procedure.

19. Select IMMOBI system with the HDS.

20. Enter the immobilizer code with the PCM replacement procedure in the HDS; it allows you to start the engine.

21. USA, Canada models: If the TP POSITION CHECK failed in step 6, clean the throttle body (see page 11-394), then go to step 22.

22. USA, Canada models: If the READ DATA failed in step 7 or the WRITE DATA failed in step 18, replace the engine oil (see page 8-9) and engine oil filter (see page 8-10), then go to step 23.

23. Select PGM-FI system and reset the PCM with the HDS.

24. Update the PCM if it does not have the latest software (see page 11-7).

25. Do the PCM idle learn procedure (see page 11-339).

26. Do the CKP pattern learn procedure (see page 11-4).

Protected by AR

# Electronic Throttle Control System

## Component Location Index

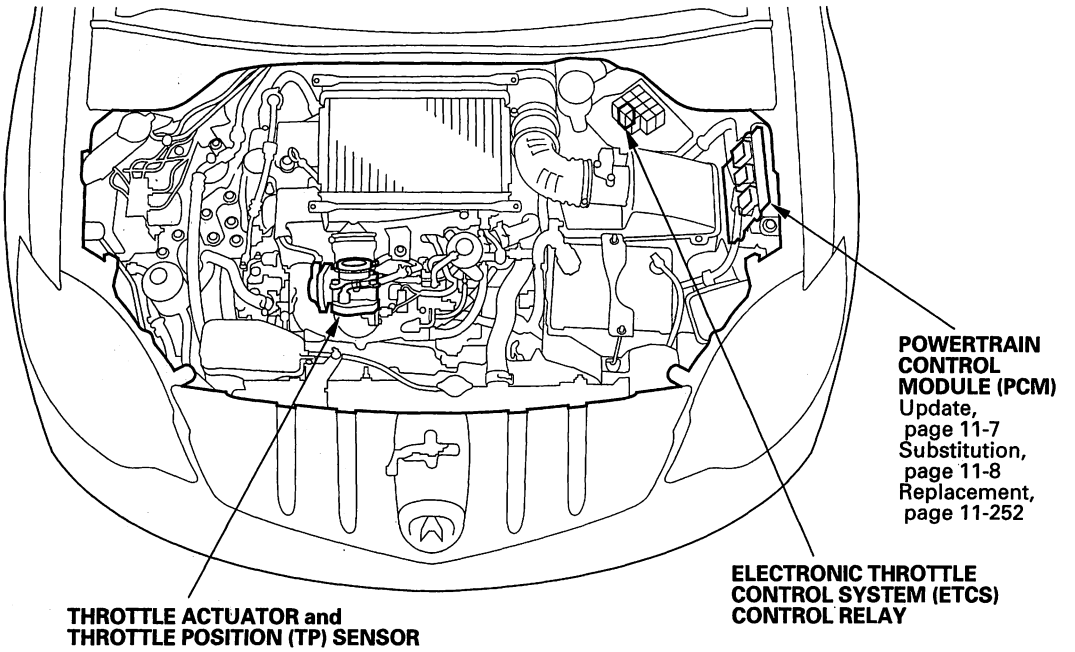


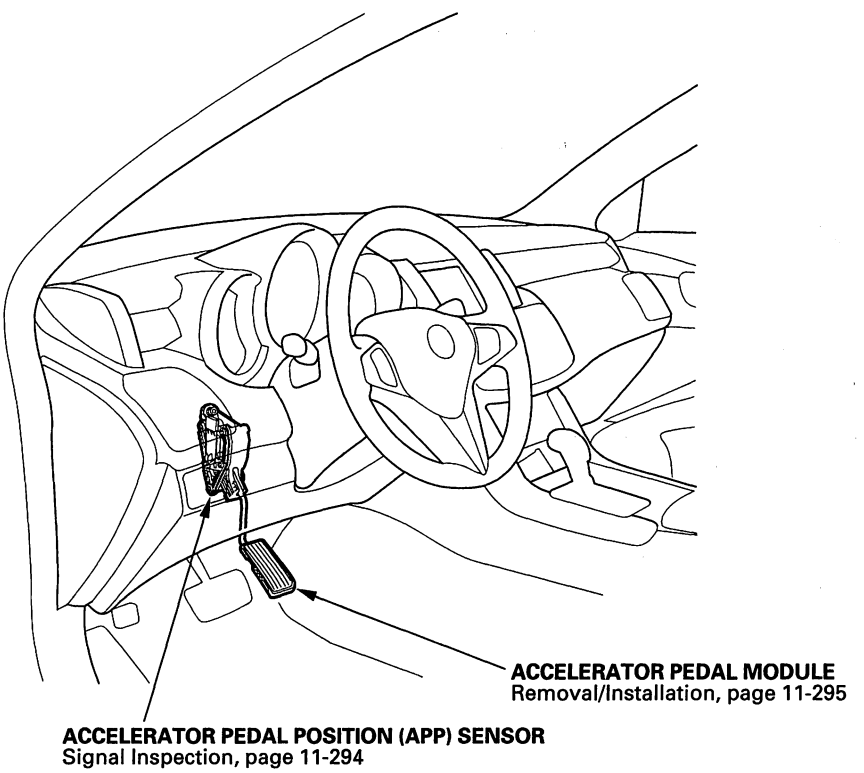




BACK

Protected by AR



## DTC P0122: TP Sensor A Circuit Low Voltage

NOTE: Before you troubleshoot, record all freeze data and any on-board snapshot, and review the general troubleshooting information (see page 11-3).

1. Turn the ignition switch ON (II).
2. Clear the DTC with the HDS.
3. Check TP SENSOR A in the DATA LIST with the HDS.

   *Is there about 0.3 V or less?*

   **YES**—Go to step 4.

   **NO**—Intermittent failure, the system is OK at this time. Check for poor connections or loose terminals at the throttle body and the PCM. ■

4. Check for Temporary DTCs or DTCs with the HDS.

   *Are DTC P0122 and P0222 indicated at the same time?*

   **YES**—Go to step 10.

   **NO**—Go to step 5.

5. Turn the ignition switch OFF.
6. Disconnect the throttle body 6P connector.
7. Jump the SCS line with the HDS.
8. Disconnect PCM connector C (44P).
9. Check for continuity between throttle body 6P connector terminal No. 1 and body ground.

**THROTTLE BODY 6P CONNECTOR**

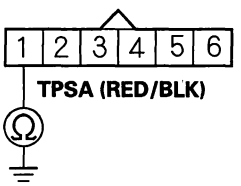


Wire side of female terminals

*Is there continuity?*

**YES**—Repair short in the wire between the throttle body and the PCM (C20), then go to step 18.

**NO**—Go to step 23.

10. Measure voltage between throttle body 6P connector terminal No. 2 and body ground.

**THROTTLE BODY 6P CONNECTOR**

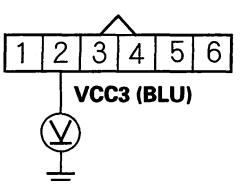


Wire side of female terminals

*Is there about 5 V?*

**YES**—Go to step 16.

**NO**—Go to step 11.

(cont'd)

Protected by AR



## DTC Troubleshooting (cont'd)

11. Turn the ignition switch OFF.

12. Jump the SCS line with the HDS.

13. Disconnect PCM connector C (44P).

14. Disconnect the throttle body 6P connector.

15. Check for continuity between PCM connector terminal C12 and throttle body 6P connector terminal No. 2.

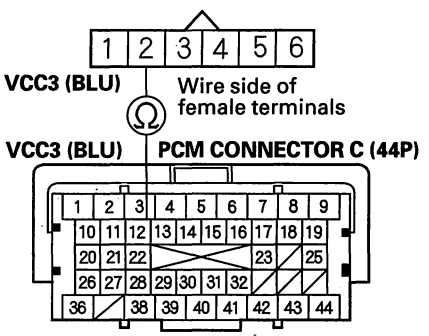


*Is there continuity?*

**YES**—Go to step 23.

**NO**—Repair open in the wire between the throttle body and the PCM (C12), then go to step 18.

16. Turn the ignition switch OFF.

17. Replace the throttle body (see page 11-396).

18. Reconnect all connectors.

19. Turn the ignition switch ON (II).

20. Reset the PCM with the HDS.

21. Do the PCM idle learn procedure (see page 11-339).

22. Check for Temporary DTCs or DTCs with the HDS.

    *Is DTC P0122 indicated?*

    **YES**—Check for poor connections or loose terminals at the throttle body and the PCM, then go to step 1.

    **NO**—Troubleshooting is complete. If any other Temporary DTCs or DTCs are indicated, go to the indicated DTC's troubleshooting. ■

23. Reconnect all connectors.

24. Update the PCM if it does not have the latest software (see page 11-7), or substitute a known-good PCM (see page 11-8).

25. Check for Temporary DTCs or DTCs with the HDS.

    *Is DTC P0122 indicated?*

    **YES**—Check for poor connections or loose terminals at TP sensor A and the PCM. If the PCM was updated, substitute a known-good PCM (see page 11-8), then recheck. If the PCM was substituted, go to step 1.

    **NO**—If the PCM was updated, troubleshooting is complete. If the PCM was substituted, replace the original PCM (see page 11-252). If any other Temporary DTCs or DTCs are indicated, go to the indicated DTC's troubleshooting. ■



BACK

Protected by AR

## **DTC P0123:** TP Sensor A Circuit High Voltage

NOTE: Before you troubleshoot, record all freeze data and any on-board snapshot, and review the general troubleshooting information (see page 11-3).

1. Turn the ignition switch ON (II).
2. Clear the DTC with the HDS.
3. Check TP SENSOR A in the DATA LIST with the HDS.

   *Is there about 4.8 V or more?*

   **YES**—Go to step 4.

   **NO**—Intermittent failure, the system is OK at this time. Check for poor connections or loose terminals at the throttle body and the PCM. ■

4. Check for Temporary DTCs or DTCs with the HDS.

   *Are DTC P0123 and P0223 indicated at the same time?*

   **YES**—Go to step 13.

   **NO**—Go to step 5.

5. Turn the ignition switch OFF.
6. Disconnect the throttle body 6P connector.
7. Turn the ignition switch ON (II).
8. Measure voltage between throttle body 6P connector terminal No. 1 and body ground.

**THROTTLE BODY 6P CONNECTOR**

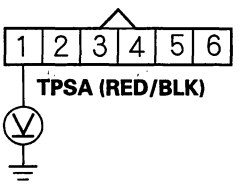


Wire side of female terminals

   *Is there about 5 V?*

   **YES**—Go to step 18.

   **NO**—Go to step 9.

9. Turn the ignition switch OFF.
10. Jump the SCS line with the HDS.
11. Disconnect PCM connector C (44P).

(cont'd)

Protected by AR



## DTC Troubleshooting (cont'd)

12. Check for continuity between PCM connector terminal C20 and throttle body 6P connector terminal No. 1.

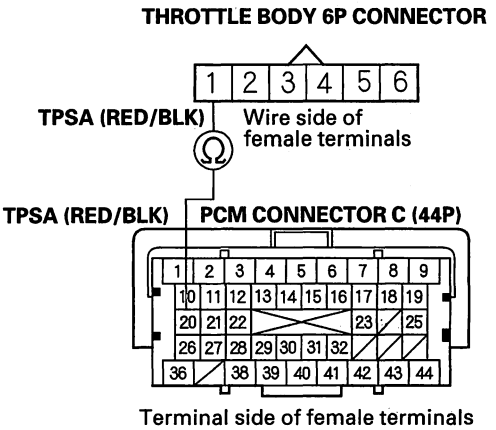


*Is there continuity?*

**YES**—Go to step 25.

**NO**—Repair open in the wire between the throttle body and the PCM (C20), then go to step 20.

13. Turn the ignition switch OFF.

14. Disconnect the throttle body 6P connector.

15. Jump the SCS line with the HDS.

16. Disconnect PCM connector C (44P).

17. Check for continuity between PCM connector terminal C39 and throttle body 6P connector terminal No. 4.

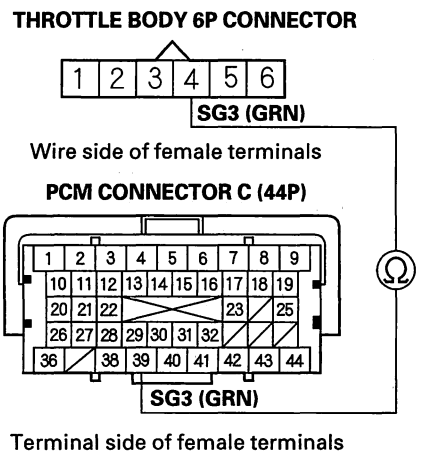


*Is there continuity?*

**YES**—Go to step 25.

**NO**—Repair open in the wire between the throttle body and the PCM (C39), then go to step 20.



BACK

Protected by AR

18. Turn the ignition switch OFF.

19. Replace the throttle body (see page 11-396).

20. Reconnect all connectors.

21. Turn the ignition switch ON (II).

22. Reset the PCM with the HDS.

23. Do the PCM idle learn procedure (see page 11-339).

24. Check for Temporary DTCs or DTCs with the HDS.

    *Is DTC P0123 indicated?*

    **YES**—Check for poor connections or loose terminals at the throttle body and the PCM, then go to step 1.

    **NO**—Troubleshooting is complete. If any other Temporary DTCs or DTCs are indicated, go to the indicated DTC's troubleshooting.■

25. Reconnect all connectors.

26. Update the PCM if it does not have the latest software (see page 11-7), or substitute a known-good PCM (see page 11-8).

27. Check for Temporary DTCs or DTCs with the HDS.

    *Is DTC P0123 indicated?*

    **YES**—Check for poor connections or loose terminals at TP sensor A and the PCM. If the PCM was updated, substitute a known-good PCM (see page 11-8), then recheck. If the PCM was substituted, go to step 1.

    **NO**—If the PCM was updated, troubleshooting is complete. If the PCM was substituted, replace the original PCM (see page 11-252). If any other Temporary DTCs or DTCs are indicated, go to the indicated DTC's troubleshooting.■

Protected by AR



## DTC Troubleshooting (cont'd)

### **DTC P0222:** TP Sensor B Circuit Low Voltage

NOTE: Before you troubleshoot, record all freeze data and any on-board snapshot, and review the general troubleshooting information (see page 11-3).

1. Turn the ignition switch ON (II).
2. Clear the DTC with the HDS.
3. Check TP SENSOR B in the DATA LIST with the HDS.

   *Is there about 0.3 V or less?*

   **YES**—Go to step 4.

   **NO**—Intermittent failure, the system is OK at this time. Check for poor connections or loose terminals at the throttle body and the PCM. ■

4. Check for Temporary DTCs or DTCs with the HDS.

   *Are DTC P0122 and P0222 indicated at the same time?*

   **YES**—Go to step 10.

   **NO**—Go to step 5.

5. Turn the ignition switch OFF.
6. Disconnect the throttle body 6P connector.
7. Jump the SCS line with the HDS.
8. Disconnect PCM connector C (44P).
9. Check for continuity between throttle body 6P connector terminal No. 3 and body ground.

**THROTTLE BODY 6P CONNECTOR**

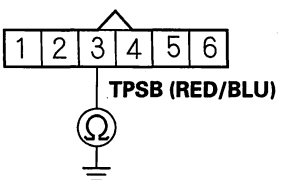


Wire side of female terminals

*Is there continuity?*

**YES**—Repair short in the wire between the throttle body and the PCM (C21), then go to step 18.

**NO**—Go to step 23.



BACK

Protected by AR

10. Measure voltage between throttle body 6P connector terminal No. 2 and body ground.

**THROTTLE BODY 6P CONNECTOR**

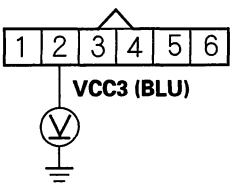


Wire side of female terminals

*Is there about 5 V?*

**YES**—Go to step 16.

**NO**—Go to step 11.

11. Turn the ignition switch OFF.
12. Jump the SCS line with the HDS.
13. Disconnect PCM connector C (44P).
14. Disconnect the throttle body 6P connector.

15. Check for continuity between PCM connector terminal C12 and throttle body 6P connector terminal No. 2.

**THROTTLE BODY 6P CONNECTOR**

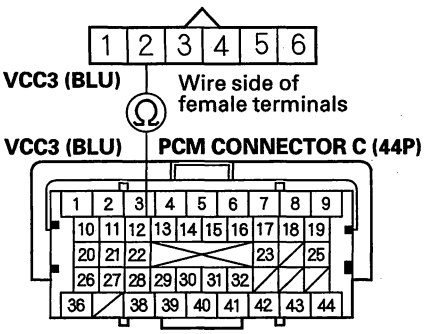


Terminal side of female terminals

*Is there continuity?*

**YES**—Go to step 23.

**NO**—Repair open in the wire between the throttle body and the PCM (C12), then go to step 18.

(cont'd)

Protected by AR



## DTC Troubleshooting (cont'd)

16. Turn the ignition switch OFF.

17. Replace the throttle body (see page 11-396).

18. Reconnect all connectors.

19. Turn the ignition switch ON (II).

20. Reset the PCM with the HDS.

21. Do the PCM idle learn procedure (see page 11-339).

22. Check for Temporary DTCs or DTCs with the HDS.

    *Is DTC P0222 indicated?*

    **YES**—Check for poor connections or loose terminals at the throttle body and the PCM, then go to step 1.

    **NO**—Troubleshooting is complete. If any other Temporary DTCs or DTCs are indicated, go to the indicated DTC's troubleshooting.■

23. Reconnect all connectors.

24. Update the PCM if it does not have the latest software (see page 11-7), or substitute a known-good PCM (see page 11-8).

25. Check for Temporary DTCs or DTCs with the HDS.

    *Is DTC P0222 indicated?*

    **YES**—Check for poor connections or loose terminals at TP sensor A and the PCM. If the PCM was updated, substitute a known-good PCM (see page 11-8), then recheck. If the PCM was substituted, go to step 1.

    **NO**—If the PCM was updated, troubleshooting is complete. If the PCM was substituted, replace the original PCM (see page 11-252). If any other Temporary DTCs or DTCs are indicated, go to the indicated DTC's troubleshooting.■



BACK

Protected by AR

## **DTC P0223:** TP Sensor B Circuit High Voltage

NOTE: Before you troubleshoot, record all freeze data and any on-board snapshot, and review the general troubleshooting information (see page 11-3).

1. Turn the ignition switch ON (II).
2. Clear the DTC with the HDS.
3. Check TP SENSOR B in the DATA LIST with the HDS.

   *Is there about 4.8 V or more?*

   **YES**—Go to step 4.

   **NO**—Intermittent failure, the system is OK at this time. Check for poor connections or loose terminals at the throttle body and the PCM. ■

4. Check for Temporary DTCs or DTCs with the HDS.

   *Are DTC P0123 and P0223 indicated at the same time?*

   **YES**—Go to step 13.

   **NO**—Go to step 5.

5. Turn the ignition switch OFF.
6. Disconnect the throttle body 6P connector.
7. Turn the ignition switch ON (II).
8. Measure voltage between throttle body 6P connector terminal No. 3 and body ground.

**THROTTLE BODY 6P CONNECTOR**

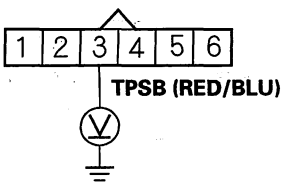


Wire side of female terminals

*Is there about 5 V?*

**YES**—Go to step 18.

**NO**—Go to step 9.

9. Turn the ignition switch OFF.
10. Jump the SCS line with the HDS.
11. Disconnect PCM connector C (44P).

(cont'd)

Protected by AR



## DTC Troubleshooting (cont'd)

12. Check for continuity between PCM connector terminal C21 and throttle body 6P connector terminal No. 3.

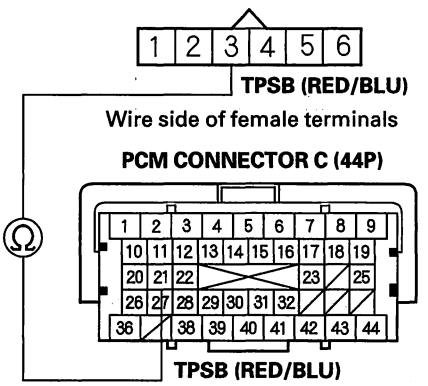


*Is there continuity?*

**YES**—Go to step 25.

**NO**—Repair open in the wire between the throttle body and the PCM (C21), then go to step 20.

13. Turn the ignition switch OFF.

14. Disconnect the throttle body 6P connector.

15. Jump the SCS line with the HDS.

16. Disconnect PCM connector C (44P).

17. Check for continuity between PCM connector terminal C39 and throttle body 6P connector terminal No. 4.

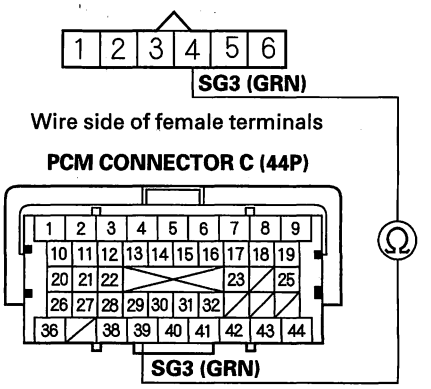


*Is there continuity?*

**YES**—Go to step 25.

**NO**—Repair open in the wire between the throttle body and the PCM (C39), then go to step 20.



BACK

Protected by AR

18. Turn the ignition switch OFF.

19. Replace the throttle body (see page 11-396).

20. Reconnect all connectors.

21. Turn the ignition switch ON (II).

22. Reset the PCM with the HDS.

23. Do the PCM idle learn procedure (see page 11-339).

24. Check for Temporary DTCs or DTCs with the HDS.

    *Is DTC P0223 indicated?*

    **YES**—Check for poor connections or loose terminals at the throttle body and the PCM, then go to step 1.

    **NO**—Troubleshooting is complete. If any other Temporary DTCs or DTCs are indicated, go to the indicated DTC's troubleshooting.■

25. Reconnect all connectors.

26. Update the PCM if it does not have the latest software (see page 11-7), or substitute a known-good PCM (see page 11-8).

27. Check for Temporary DTCs or DTCs with the HDS.

    *Is DTC P0223 indicated?*

    **YES**—Check for poor connections or loose terminals at TP sensor B and the PCM. If the PCM was updated, substitute a known-good PCM (see page 11-8), then recheck. If the PCM was substituted, go to step 1.

    **NO**—If the PCM was updated, troubleshooting is complete. If the PCM was substituted, replace the original PCM (see page 11-252). If any other Temporary DTCs or DTCs are indicated, go to the indicated DTC's troubleshooting.■

Protected by AR



## DTC Troubleshooting (cont'd)

### DTC P1658: Electronic Throttle Control System (ETCS) Control Relay ON Malfunction

NOTE: Before you troubleshoot, record all freeze data and any on-board snapshot, and review the general troubleshooting information (see page 11-3).

1. Turn the ignition switch ON (II).
2. Do the ETCS TEST in the INSPECTION MENU with the HDS.

   *Is the RELAY circuit OK?*

   **YES**—Intermittent failure, the system is OK at this time. Check for poor connections or loose terminals at the ETCS control relay and the PCM. ■

   **NO**—Go to step 3.
3. Turn the ignition switch OFF.
4. Remove the ETCS control relay (F) from the under-hood fuse/relay box.

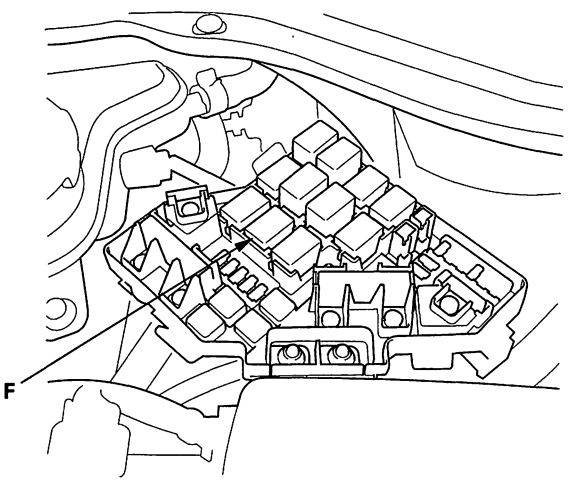


5. Test the ETCS control relay (see page 22-64).

   *Is the ETCS control relay OK?*

   **YES**—Go to step 6.

   **NO**—Replace the ETCS control relay, then go to step 13.
6. Jump the SCS line with the HDS.
7. Disconnect PCM connector A (44P).
8. Check for continuity between PCM connector terminal A20 and body ground.

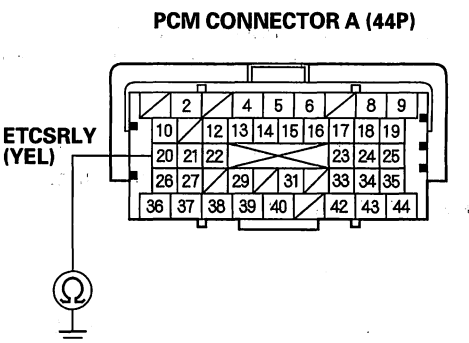


Terminal side of female terminals

*Is there continuity?*

**YES**—Repair short in the wire between the PCM (A20) and the ETCS control relay, then go to step 13.

**NO**—Go to step 9.



BACK

Protected by AR

9. Disconnect PCM connector C (44P).

10. Turn the ignition switch ON (II).

11. Measure voltage between PCM connector terminal C1 and body ground.

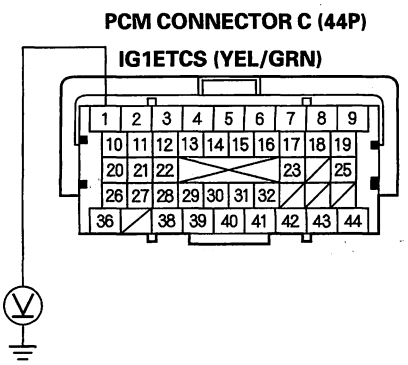


Terminal side of female terminals

*Is there battery voltage?*

**YES**—Repair short to power in the wire between the PCM (C1) and the ETCS control relay, then go to step 12.

**NO**—Go to step 18.

12. Turn the ignition switch OFF.

13. Reconnect all connectors.

14. Turn the ignition switch ON (II).

15. Reset the PCM with the HDS.

16. Do the PCM idle learn procedure (see page 11-339).

17. Check for Temporary DTCs or DTCs with the HDS.

*Is DTC P1658 indicated?*

**YES**—Check for poor connections or loose terminals at the ETCS control relay and the PCM, then go to step 1.

**NO**—Troubleshooting is complete. If any other Temporary DTCs or DTCs are indicated, go to the indicated DTC's troubleshooting. ■

18. Turn the ignition switch OFF.

19. Reconnect all connectors.

20. Update the PCM if it does not have the latest software (see page 11-7), or substitute a known-good PCM (see page 11-8).

21. Check for Temporary DTCs or DTCs with the HDS.

*Is DTC P1658 indicated?*

**YES**—Check for poor connections or loose terminals at the ETCS control relay and the PCM. If the PCM was updated, substitute a known-good PCM (see page 11-8), then recheck. If the PCM was substituted, go to step 1.

**NO**—If the PCM was updated, troubleshooting is complete. If the PCM was substituted, replace the original PCM (see page 11-252). If any other Temporary DTCs or DTCs are indicated, go to the indicated DTC's troubleshooting. ■

Protected by AR



## DTC Troubleshooting (cont'd)

### DTC P1659: Electronic Throttle Control System (ETCS) Control Relay OFF Malfunction

NOTE: Before you troubleshoot, record all freeze data and any on-board snapshot, and review the general troubleshooting information (see page 11-3).

1. Turn the ignition switch ON (II).
2. Clear the DTC with the HDS.
3. Check for Temporary DTCs or DTCs with the HDS.

   *Is DTC P1659 indicated?*

   **YES**—Go to step 4.

   **NO**—Intermittent failure, the system is OK at this time. Check for poor connections or loose terminals at the ETCS control relay and the PCM. ■

4. Turn the ignition switch OFF.
5. Check the No. 21 DBW (THROTTLE ACTUATOR CONTROL) (15 A) fuse in the under-hood fuse/relay box.

   *Is the fuse OK?*

   **YES**—Go to step 6.

   **NO**—Go to step 17.

6. Remove the ETCS control relay (F) from the under-hood fuse/relay box.

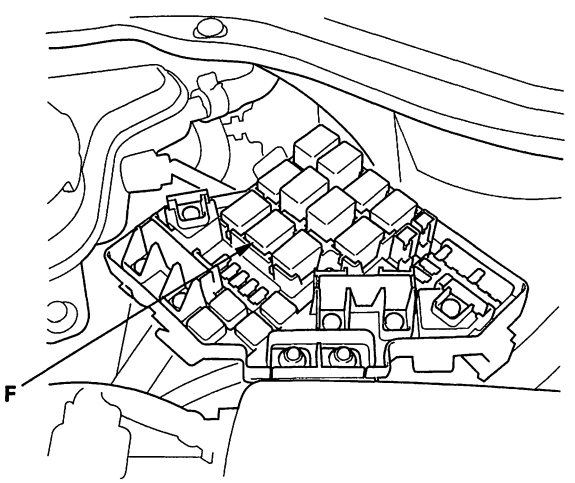


7. Test the ETCS control relay (see page 22-64).

   *Is the ETCS control relay OK?*

   **YES**—Go to step 8.

   **NO**—Replace the ETCS control relay, then go to step 23.

8. Turn the ignition switch ON (II).
9. Measure voltage between ETCS control relay 4P connector terminal No. 4 and body ground.

**ETCS CONTROL RELAY 4P CONNECTOR**

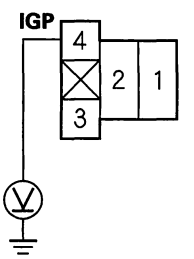


Terminal side of female terminals

*Is there battery voltage?*

**YES**—Go to step 10.

**NO**—Replace the under-hood fuse/relay box (see page 22-61), then go to step 22.



BACK

Protected by AR

10. Measure voltage between ETCS control relay 4P connector terminal No. 4 and body ground.

**ETCS CONTROL RELAY 4P CONNECTOR**

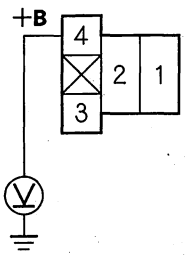


Terminal side of female terminals

*Is there battery voltage?*

**YES**—Go to step 11.

**NO**—Replace the under-hood fuse/relay box (see page 22-61), then go to step 22.

11. Turn the ignition switch OFF.

12. Jump the SCS line with the HDS.

13. Disconnect PCM connector C (44P).

14. Check for continuity between ETCS control relay 4P connector terminal No. 2 and PCM connector terminal C1.

**ETCS CONTROL RELAY 4P CONNECTOR**

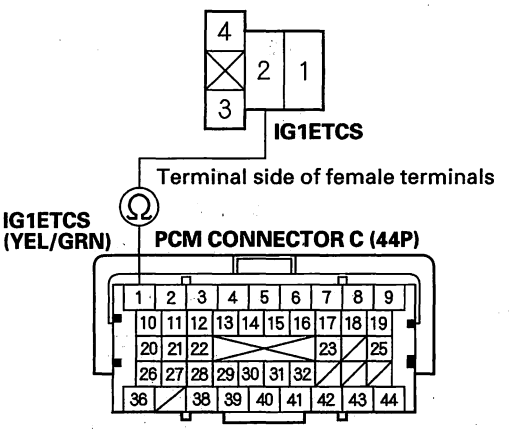


Terminal side of female terminals

*Is there continuity?*

**YES**—Go to step 15.

**NO**—Repair open in the wire between the PCM (C1) and the ETCS control relay, then go to step 23.

(cont'd)

Protected by AR



## DTC Troubleshooting (cont'd)

15. Disconnect PCM connector A (44P).

16. Check for continuity between ETCS control relay 4P connector terminal No. 3 and PCM connector terminal A20.

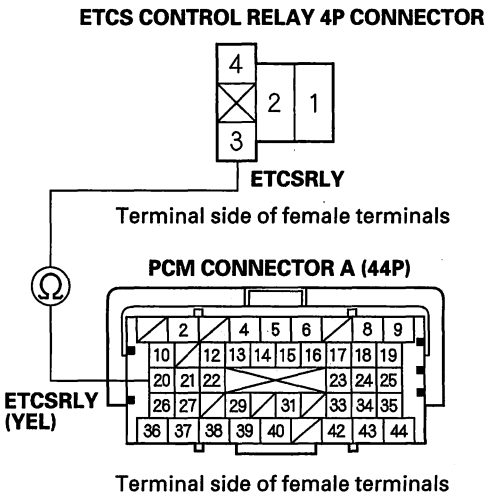


*Is there continuity?*

**YES**—Go to step 28.

**NO**—Repair open in the wire between the PCM (A20) and the ETCS control relay, then go to step 23.

17. Remove the ETCS control relay (F) from the under-hood fuse/relay box.

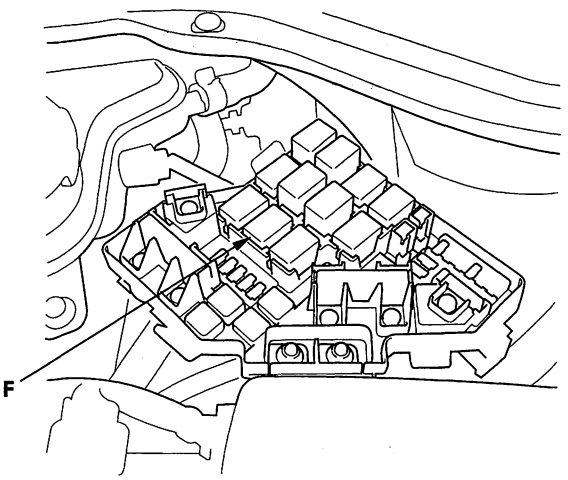


18. Jump the SCS line with the HDS.

19. Disconnect PCM connector C (44P).

20. Check for continuity between PCM connector terminal C1 and body ground.

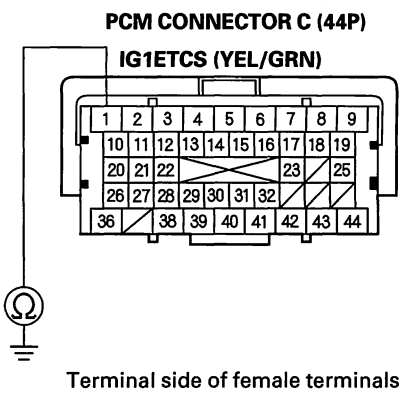


*Is there continuity?*

**YES**—Repair short in the wire between the PCM (C1) and the ETCS control relay, then go to step 23.

**NO**—Go to step 21.



BACK

Protected by AR

21. Check for continuity between ETCS control relay 4P connector terminal No. 1 and body ground.

**ETCS CONTROL RELAY 4P CONNECTOR**

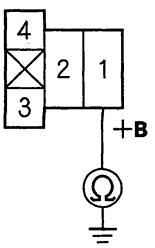


Terminal side of female terminals

*Is there continuity?*

**YES**—Replace the under-hood fuse/relay box (see page 22-61), then go to step 23.

**NO**—Go to step 28.

22. Turn the ignition switch OFF.

23. Reconnect all connectors.

24. Turn the ignition switch ON (II).

25. Reset the PCM with the HDS.

26. Do the PCM idle learn procedure (see page 11-339).

27. Check for Temporary DTCs or DTCs with the HDS.

*Is DTC P1659 indicated?*

**YES**—Check for poor connections or loose terminals at the ETCS control relay and the PCM, then go to step 1.

**NO**—Troubleshooting is complete. If any other Temporary DTCs or DTCs are indicated, go to the indicated DTC's troubleshooting.■

28. Reconnect all connectors.

29. Update the PCM if it does not have the latest software (see page 11-7), or substitute a known-good PCM (see page 11-8).

30. Check for Temporary DTCs or DTCs with the HDS.

*Is DTC P1659 indicated?*

**YES**—Check for poor connections or loose terminals at the ETCS control relay and the PCM. If the PCM was updated, substitute a known-good PCM (see page 11-8), then recheck. If the PCM was substituted, go to step 1.

**NO**—If the PCM was updated, troubleshooting is complete. If the PCM was substituted, replace the original PCM (see page 11-252). If any other Temporary DTCs or DTCs are indicated, go to the indicated DTC's troubleshooting.■

Protected by AR



## DTC Troubleshooting (cont'd)

**DTC P1683:** Throttle Valve Default Position Spring Performance Problem

**⚠CAUTION**

Do not insert your fingers into the installed throttle body when you turn the ignition switch ON (II) or while the ignition switch is ON (II). If you do, you will seriously injure your fingers if the throttle valve is activated.

NOTE: Before you troubleshoot, record all freeze data and any on-board snapshot, and review the general troubleshooting information (see page 11-3).

1. Turn the ignition switch ON (II).
2. Clear the DTC with the HDS.
3. Start the engine. Hold the engine speed at 3,000 rpm without load (in Park or neutral) until the radiator fan comes on, then let it idle.
4. Turn the ignition switch OFF, and wait 10 seconds.
5. Turn the ignition switch ON (II).
6. Check for Temporary DTCs or DTCs with the HDS.

   *Is DTC P1683 indicated?*

   **YES**—Go to step 7.

   **NO**—Intermittent failure, the system is OK at this time. Check for poor connections or loose terminals at the throttle body and the PCM.■

7. Turn the ignition switch OFF.
8. Remove the charge air cooler (see page 9-7) and intake air duct (charge air cooler outlet tube) (see page 9-11).
9. Push the throttle valve closed as shown.

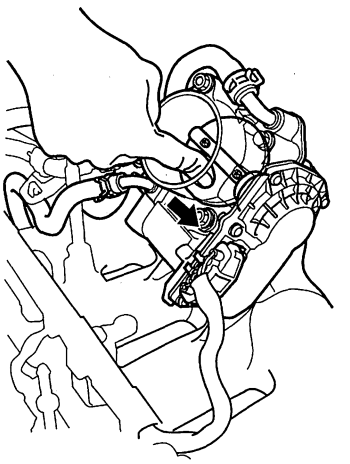

10. Release the throttle valve.

    *Does the throttle valve return?*

    **YES**—Clean the throttle body (see page 11-394), then go to step 12 and recheck. If DTC P1683 is indicated, go to step 11.

    **NO**—Go to step 11.

11. Replace the throttle body (see page 11-396).
12. Turn the ignition switch ON (II).
13. Reset the PCM with the HDS.
14. Do the PCM idle learn procedure (see page 11-339).
15. Turn the ignition switch OFF, and wait 10 seconds.
16. Turn the ignition switch ON (II).
17. Check for Temporary DTCs or DTCs with the HDS.

    *Is DTC P1683 indicated?*

    **YES**—Check for poor connections or loose terminals at the throttle body and the PCM, then go to step 1.

    **NO**—Troubleshooting is complete. If any other Temporary DTCs or DTCs are indicated, go to the indicated DTC's troubleshooting.■



BACK

Protected by AR

## **DTC P1684:** Throttle Valve Return Spring Performance Problem

**⚠CAUTION**

Do not insert your fingers into the installed throttle body when you turn the ignition switch ON (II) or while the ignition switch is ON (II). If you do, you will seriously injure your fingers if the throttle valve is activated.

NOTE: Before you troubleshoot, record all freeze data and any on-board snapshot, and review the general troubleshooting information (see page 11-3).

1. Turn the ignition switch ON (II).
2. Clear the DTC with the HDS.
3. Start the engine. Hold the engine speed at 3,000 rpm without load (in Park or neutral) until the radiator fan comes on, then let it idle.
4. Turn the ignition switch OFF, and wait 10 seconds.
5. Turn the ignition switch ON (II).
6. Check for Temporary DTCs or DTCs with the HDS.

   *Is DTC P1684 indicated?*

   **YES**—Go to step 7.

   **NO**—Intermittent failure, the system is OK at this time. Check for poor connections or loose terminals at the throttle body and the PCM.■

7. Turn the ignition switch OFF.
8. Remove the charge air cooler (see page 9-7) and intake air duct (charge air cooler outlet tube) (see page 9-11).
9. Push the throttle valve open as shown.

10. Release the throttle valve.

    *Does the throttle valve return?*

    **YES**—Clean the throttle body (see page 11-394), then go to step 12 and recheck. If DTC P1684 is indicated, go to step 11.

    **NO**—Go to step 11.

11. Replace the throttle body (see page 11-396).
12. Turn the ignition switch ON (II).
13. Reset the PCM with the HDS.
14. Do the PCM idle learn procedure (see page 11-339).
15. Turn the ignition switch OFF, and wait 10 seconds.
16. Turn the ignition switch ON (II).
17. Check for Temporary DTCs or DTCs with the HDS.

    *Is DTC P1684 indicated?*

    **YES**—Check for poor connections or loose terminals at the throttle body and the PCM, then go to step 1.

    **NO**—Troubleshooting is complete. If any other Temporary DTCs or DTCs are indicated, go to the indicated DTC's troubleshooting.■

Protected by AR



## DTC Troubleshooting (cont'd)

**DTC P2101:** Electronic Throttle Control System (ETCS) Malfunction

**⚠CAUTION**

Do not insert your fingers into the installed throttle body when you turn the ignition switch ON (II) or while the ignition switch is ON (II). If you do, you will seriously injure your fingers if the throttle valve is activated.

NOTE: Before you troubleshoot, record all freeze data and any on-board snapshot, and review the general troubleshooting information (see page 11-3).

1. Turn the ignition switch ON (II).
2. Clear the DTC with the HDS.
3. Do the ETCS TEST in the INSPECTION MENU with the HDS.
4. Check for Temporary DTCs or DTCs with the HDS.

   *Is DTC P2101 indicated?*

   **YES**—Go to step 7.

   **NO**—Go to step 5.
5. Test-drive the vehicle for several minutes in the range of these recorded freeze data parameters:

   - ENGINE SPEED
   - VSS
   - APP SENSOR A
6. Check for Temporary DTCs or DTCs with the HDS.

   *Is DTC P2101 indicated?*

   **YES**—Go to step 7.

   **NO**—Intermittent failure, the system is OK at this time. Check for poor connections or loose terminals at the throttle body and the PCM, then clean the throttle body (see page 11-394).■
7. Turn the ignition switch OFF.
8. Remove the charge air cooler (see page 9-7) and intake air duct (charge air cooler outlet tube) (see page 9-11).
9. Turn the ignition switch ON (II).
10. Clear the DTC with the HDS.
11. Do the ETCS TEST in the INSPECTION MENU with the HDS.
12. Visually check the throttle valve operation.

    *Does the throttle valve operate smoothly?*

    **YES**—Clean the throttle body (see page 11-394), then go to step 22 and recheck. If DTC P2101 is indicated, go to step 19.

    **NO**—Go to step 13.
13. Turn the ignition switch OFF.
14. Disconnect the throttle body 6P connector.
15. Jump the SCS line with the HDS.
16. Disconnect PCM connector C (44P).
17. Connect throttle body 6P connector terminals No. 5 and No. 6 with a jumper wire.

**THROTTLE BODY 6P CONNECTOR**

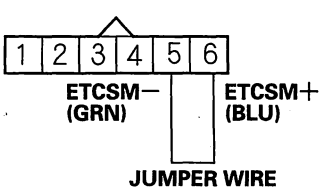


Wire side of female terminals



BACK

Protected by AR

18. Check for continuity between PCM connector terminals C3 and C4.

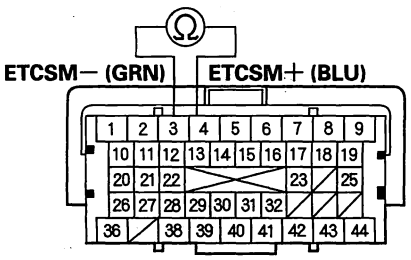


Terminal side of female terminals

*Is there continuity?*

**YES**—Go to step 27.

**NO**—Repair open in the wires between the throttle body and the PCM (C3, C4), then go to step 21.

19. Turn the ignition switch OFF.

20. Replace the throttle body (see page 11-396).

21. Reconnect all connectors.

22. Turn the ignition switch ON (II).

23. Reset the PCM with the HDS.

24. Do the PCM idle learn procedure (see page 11-339).

25. Test-drive the vehicle for several minutes in the range of these recorded freeze data parameters:

- ENGINE SPEED
- VSS
- APP SENSOR A

26. Check for Temporary DTCs or DTCs with the HDS.

*Is DTC P2101 indicated?*

**YES**—Check for poor connections or loose terminals at the throttle body and the PCM, then clean the throttle body (see page 11-394), and go to step 1.

**NO**—Troubleshooting is complete. If any other Temporary DTCs or DTCs are indicated, go to the indicated DTC's troubleshooting.■

27. Reconnect all connectors.

28. Update the PCM if it does not have the latest software (see page 11-7), or substitute a known-good PCM (see page 11-8).

29. Test-drive the vehicle for several minutes in the range of these recorded freeze data parameters:

- ENGINE SPEED
- VSS
- APP SENSOR A

30. Check for Temporary DTCs or DTCs with the HDS.

*Is DTC P2101 indicated?*

**YES**—Check for poor connections or loose terminals at the throttle body and the PCM. If the PCM was updated, substitute a known-good PCM (see page 11-8), then go to step 29. If the PCM was substituted, go to step 1.

**NO**—If the PCM was updated, troubleshooting is complete. If the PCM was substituted, replace the original PCM (see page 11-252). If any other Temporary DTCs or DTCs are indicated, go to the indicated DTC's troubleshooting.■

Protected by AR



## DTC Troubleshooting (cont'd)

### DTC P2118: Throttle Actuator Current Range/ Performance Problem

NOTE: Before you troubleshoot, record all freeze data and any on-board snapshot, and review the general troubleshooting information (see page 11-3).

1. Jump the SCS line with the HDS.
2. Disconnect PCM connector C (44P).
3. Measure resistance between PCM connector terminals C3 and C4.

**PCM CONNECTOR C (44P)**

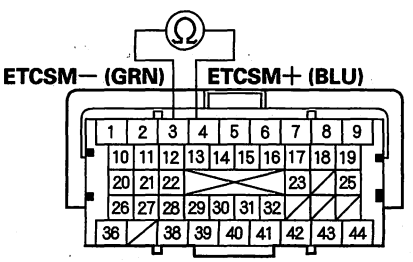


Terminal side of female terminals

*Is there about 1.0 Ω or less?*

**YES**—Go to step 4.

**NO**—Go to step 15.

4. Disconnect the throttle body 6P connector.
5. At the throttle body side, measure resistance between throttle body 6P connector terminals No. 5 and No. 6 with the throttle fully closed.

**THROTTLE BODY 6P CONNECTOR**

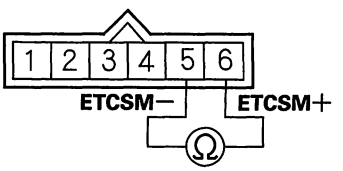


Terminal side of male terminals

*Is there about 1.0 Ω or less?*

**YES**—Go to step 6.

**NO**—Repair short in the wires between the PCM C3 (ETCSM— line) and C4 (ETCSM+ line), then go to step 7.

6. Replace the throttle body (see page 11-396).
7. Reconnect all connectors.
8. Turn the ignition switch ON (II).
9. Reset the PCM with the HDS.



BACK

Protected by AR

10. Do the PCM idle learn procedure (see page 11-339).

11. Turn the ignition switch OFF.

12. Turn the ignition switch ON (II).

13. Slowly press the accelerator pedal to the floor.

14. Check for Temporary DTCs or DTCs with the HDS.

    *Is DTC P2118 indicated?*

    **YES**—Check for poor connections or loose terminals at the throttle body and the PCM, then go to step 1.

    **NO**—Troubleshooting is complete. If any other Temporary DTCs or DTCs are indicated, go to the indicated DTC's troubleshooting. ■

15. Reconnect all connectors.

16. Update the PCM if it does not have the latest software (see page 11-7), or substitute a known-good PCM (see page 11-8).

17. Turn the ignition switch OFF.

18. Turn the ignition switch ON (II).

19. Slowly press the accelerator pedal to the floor.

20. Check for Temporary DTCs or DTCs with the HDS.

    *Is DTC P2118 indicated?*

    **YES**—Check for poor connections or loose terminals at the throttle body and the PCM. If the PCM was updated, substitute a known-good PCM (see page 11-8), then go to step 17. If the PCM was substituted, go to step 1.

    **NO**—If the PCM was updated, troubleshooting is complete. If the PCM was substituted, replace the original PCM (see page 11-252). If any other Temporary DTCs or DTCs are indicated, go to the indicated DTC's troubleshooting. ■

Protected by AR



## DTC Troubleshooting (cont'd)

### DTC P2122: APP Sensor A (TP Sensor D) Circuit Low Voltage

NOTE: Before you troubleshoot, record all freeze data and any on-board snapshot, and review the general troubleshooting information (see page 11-3).

1. Turn the ignition switch ON (II).
2. Check APP SENSOR A in the DATA LIST with the HDS.

   *Is there about 0.2 V or less?*

   **YES**—Go to step 3.

   **NO**—Intermittent failure, the system is OK at this time. Check for poor connections or loose terminals at APP sensor A and the PCM. ■
3. Turn the ignition switch OFF.
4. Disconnect the APP sensor 6P connector.
5. Turn the ignition switch ON (II).
6. Measure voltage between APP sensor 6P connector terminals No. 2 and No. 3.

**APP SENSOR 6P CONNECTOR**

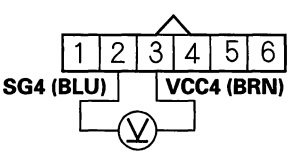


Wire side of female terminals

*Is there about 5 V?*

**YES**—Go to step 7.

**NO**—Go to step 17.

7. Turn the ignition switch OFF.
8. Jump the SCS line with the HDS.
9. Disconnect PCM connector A (44P).
10. Check for continuity between APP sensor 6P connector terminal No. 1 and body ground.

**APP SENSOR 6P CONNECTOR**

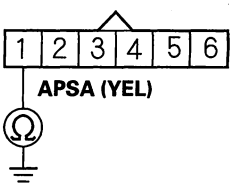


Wire side of female terminals

*Is there continuity?*

**YES**—Repair short in the wire between the PCM (A17) and APP sensor A, then go to step 24.

**NO**—Go to step 11.

11. Connect APP sensor 6P connector terminal No. 1 to body ground with a jumper wire.

**APP SENSOR 6P CONNECTOR**

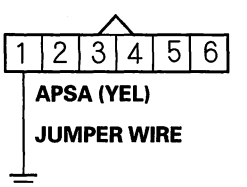


Wire side of female terminals



BACK

Protected by AR

12. Check for continuity between PCM connector terminal A17 and body ground.

**PCM CONNECTOR A (44P)**

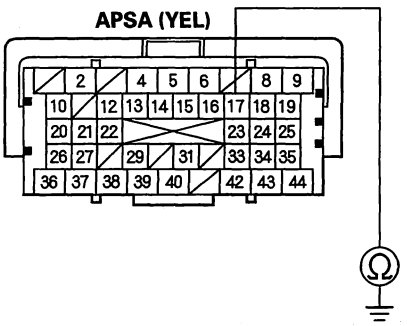


Terminal side of female terminals

*Is there continuity?*

**YES**—Go to step 13.

**NO**—Repair open in the wire between the PCM (A17) and APP sensor A, then go to step 24.

13. Reconnect PCM connector A (44P).

14. Connect APP sensor 6P connector terminals No. 1 and No. 3 with a jumper wire.

**APP SENSOR 6P CONNECTOR**

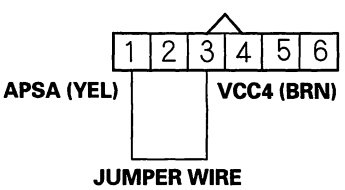


Wire side of female terminals

15. Turn the ignition switch ON (II).

16. Check APP SENSOR A in the DATA LIST with the HDS.

*Is there about 0.2 V or less?*

**YES**—Go to step 29.

**NO**—Go to step 22.

17. Turn the ignition switch OFF.

18. Jump the SCS line with the HDS.

19. Disconnect PCM connector A (44P).

20. Connect APP sensor 6P connector terminal No. 3 to body ground with a jumper wire.

**APP SENSOR 6P CONNECTOR**

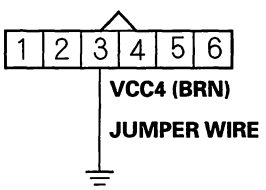


Wire side of female terminals

(cont'd)

Protected by AR



## DTC Troubleshooting (cont'd)

21. Check for continuity between PCM connector terminal A25 and body ground.

PCM CONNECTOR A (44P)

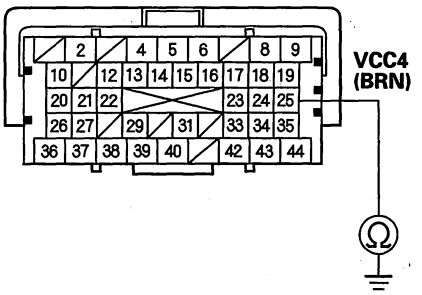


Terminal side of female terminals

*Is there continuity?*

**YES**—Go to step 30.

**NO**—Repair open in the wire between the PCM (A25) and APP sensor A, then go to step 24.

22. Turn the ignition switch OFF.

23. Replace the accelerator pedal module (see page 11-295).

24. Reconnect all connectors.

25. Turn the ignition switch ON (II).

26. Reset the PCM with the HDS.

27. Do the PCM idle learn procedure (see page 11-339).

28. Check for Temporary DTCs or DTCs with the HDS.

*Is DTC P2122 indicated?*

**YES**—Check for poor connections or loose terminals at APP sensor A and the PCM, then go to step 1.

**NO**—Troubleshooting is complete. If any other Temporary DTCs or DTCs are indicated, go to the indicated DTC's troubleshooting.■

29. Turn the ignition switch OFF.

30. Reconnect all connectors.

31. Update the PCM if it does not have the latest software (see page 11-7), or substitute a known-good PCM (see page 11-8).

32. Check for Temporary DTCs or DTCs with the HDS.

*Is DTC P2122 indicated?*

**YES**—Check for poor connections or loose terminals at APP sensor A and the PCM. If the PCM was updated, substitute a known-good PCM (see page 11-8), then recheck. If the PCM was substituted, go to step 1.

**NO**—If the PCM was updated, troubleshooting is complete. If the PCM was substituted, replace the original PCM (see page 11-252). If any other Temporary DTCs or DTCs are indicated, go to the indicated DTC's troubleshooting.■



BACK

Protected by AR

## DTC P2123: APP Sensor A (TP Sensor D) Circuit High Voltage

NOTE: Before you troubleshoot, record all freeze data and any on-board snapshot, and review the general troubleshooting information (see page 11-3).

1. Turn the ignition switch ON (II).
2. Check APP SENSOR A in the DATA LIST with the HDS.

   *Is there about 4.9 V or more?*

   **YES**—Go to step 3.

   **NO**—Intermittent failure, the system is OK at this time. Check for poor connections or loose terminals at APP sensor A and the PCM. ■
3. Turn the ignition switch OFF.
4. Disconnect the APP sensor 6P connector.
5. Turn the ignition switch ON (II).
6. Measure voltage between APP sensor 6P connector terminals No. 2 and No. 3.

**APP SENSOR 6P CONNECTOR**

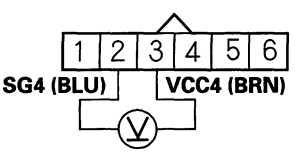


Wire side of female terminals

*Is there about 5 V?*

**YES**—Go to step 12.

**NO**—Go to step 7.

7. Turn the ignition switch OFF.
8. Jump the SCS line with the HDS.
9. Disconnect PCM connector A (44P).
10. Connect APP sensor 6P connector terminal No. 2 to body ground with a jumper wire.

**APP SENSOR 6P CONNECTOR**

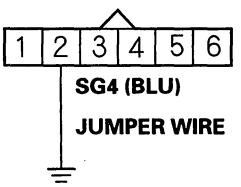


Wire side of female terminals

11. Check for continuity between PCM connector terminal A35 and body ground.

**PCM CONNECTOR A (44P)**

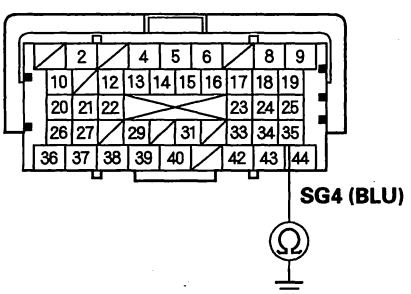


Terminal side of female terminals

*Is there continuity?*

**YES**—Go to step 19.

**NO**—Repair open in the wire between the PCM (A35) and APP sensor A, then go to step 14.

(cont'd)

Protected by AR



## DTC Troubleshooting (cont'd)

12. Turn the ignition switch OFF.

13. Replace the accelerator pedal module (see page 11-295).

14. Reconnect all connectors.

15. Turn the ignition switch ON (II).

16. Reset the PCM with the HDS.

17. Do the PCM idle learn procedure (see page 11-339).

18. Check for Temporary DTCs or DTCs with the HDS.

    *Is DTC P2123 indicated?*

    **YES**—Check for poor connections or loose terminals at APP sensor A and the PCM, then go to step 1.

    **NO**—Troubleshooting is complete. If any other Temporary DTCs or DTCs are indicated, go to the indicated DTC's troubleshooting.■

19. Reconnect all connectors.

20. Update the PCM if it does not have the latest software (see page 11-7), or substitute a known-good PCM (see page 11-8).

21. Check for Temporary DTCs or DTCs with the HDS.

    *Is DTC P2123 indicated?*

    **YES**—Check for poor connections or loose terminals at APP sensor A and the PCM. If the PCM was updated, substitute a known-good PCM (see page 11-8), then recheck. If the PCM was substituted, go to step 1.

    **NO**—If the PCM was updated, troubleshooting is complete. If the PCM was substituted, replace the original PCM (see page 11-252). If any other Temporary DTCs or DTCs are indicated, go to the indicated DTC's troubleshooting.■



BACK

Protected by AR

## DTC P2127: APP Sensor B (TP Sensor E) Circuit Low Voltage

NOTE: Before you troubleshoot, record all freeze data and any on-board snapshot, and review the general troubleshooting information (see page 11-3).

1. Turn the ignition switch ON (II).
2. Check APP SENSOR B in the DATA LIST with the HDS.

   *Is there about 0.2 V or less?*

   **YES**—Go to step 3.

   **NO**—Intermittent failure, the system is OK at this time. Check for poor connections or loose terminals at APP sensor B and the PCM. ■
3. Turn the ignition switch OFF.
4. Disconnect the APP sensor 6P connector.
5. Turn the ignition switch ON (II).
6. Measure voltage between APP sensor 6P connector terminals No. 5 and No. 6.

**APP SENSOR 6P CONNECTOR**

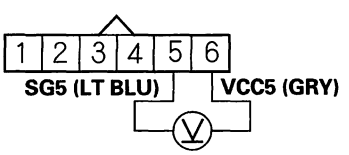


Wire side of female terminals

*Is there about 5 V?*

**YES**—Go to step 7.

**NO**—Go to step 17.

7. Turn the ignition switch OFF.
8. Jump the SCS line with the HDS.
9. Disconnect PCM connector A (44P).
10. Check for continuity between APP sensor 6P connector terminal No. 4 and body ground.

**APP SENSOR 6P CONNECTOR**

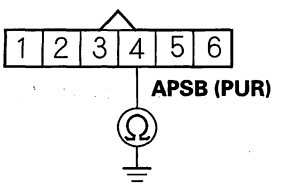


Wire side of female terminals

*Is there continuity?*

**YES**—Repair short in the wire between the PCM (A18) and APP sensor B, then go to step 24.

**NO**—Go to step 11.

11. Connect APP sensor 6P connector terminal No. 4 to body ground with a jumper wire.

**APP SENSOR 6P CONNECTOR**

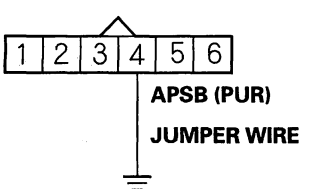


Wire side of female terminals

(cont'd)

Protected by AR



## DTC Troubleshooting (cont'd)

12. Check for continuity between PCM connector terminal A18 and body ground.

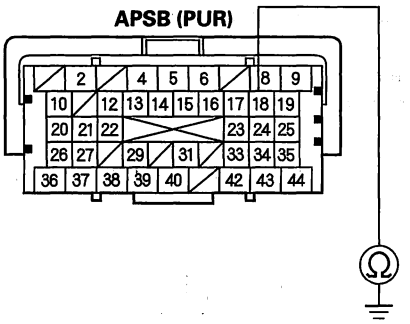


Terminal side of female terminals

*Is there continuity?*

**YES**—Go to step 13.

**NO**—Repair open in the wire between the PCM (A18) and APP sensor B, then go to step 24.

13. Reconnect PCM connector A (44P).

14. Connect APP sensor 6P connector terminals No. 4 and No. 6 with a jumper wire.

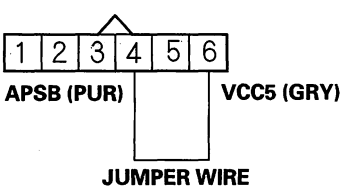


Wire side of female terminals

15. Turn the ignition switch ON (II).

16. Check APP SENSOR B in the DATA LIST with the HDS.

*Is there about 0.2 V or less?*

**YES**—Go to step 29.

**NO**—Go to step 22.

17. Turn the ignition switch OFF.

18. Jump the SCS line with the HDS.

19. Disconnect PCM connector A (44P).

20. Connect APP sensor 6P connector terminal No. 6 to body ground with a jumper wire.

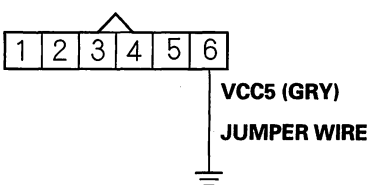


Wire side of female terminals



BACK

Protected by AR

21. Check for continuity between PCM connector terminal A24 and body ground.

**PCM CONNECTOR A (44P)**

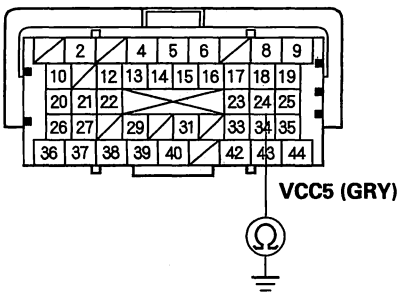


Terminal side of female terminals

*Is there continuity?*

**YES**—Go to step 30.

**NO**—Repair open in the wire between the PCM (A24) and APP sensor B, then go to step 24.

22. Turn the ignition switch OFF.

23. Replace the accelerator pedal module (see page 11-295).

24. Reconnect all connectors.

25. Turn the ignition switch ON (II).

26. Reset the PCM with the HDS.

27. Do the PCM idle learn procedure (see page 11-339).

28. Check for Temporary DTCs or DTCs with the HDS.

*Is DTC P2127 indicated?*

**YES**—Check for poor connections or loose terminals at APP sensor B and the PCM, then go to step 1.

**NO**—Troubleshooting is complete. If any other Temporary DTCs or DTCs are indicated, go to the indicated DTC's troubleshooting.■

29. Turn the ignition switch OFF.

30. Reconnect all connectors.

31. Update the PCM if it does not have the latest software (see page 11-7), or substitute a known-good PCM (see page 11-8).

32. Check for Temporary DTCs or DTCs with the HDS.

*Is DTC P2127 indicated?*

**YES**—Check for poor connections or loose terminals at APP sensor B and the PCM. If the PCM was updated, substitute a known-good PCM (see page 11-8), then recheck. If the PCM was substituted, go to step 1.

**NO**—If the PCM was updated, troubleshooting is complete. If the PCM was substituted, replace the original PCM (see page 11-252). If any other Temporary DTCs or DTCs are indicated, go to the indicated DTC's troubleshooting.■

Protected by AR



## DTC Troubleshooting (cont'd)

### DTC P2128: APP Sensor B (TP Sensor E) Circuit High Voltage

NOTE: Before you troubleshoot, record all freeze data and any on-board snapshot, and review the general troubleshooting information (see page 11-3).

1. Turn the ignition switch ON (II).
2. Check APP SENSOR B in the DATA LIST with the HDS.

   *Is there about 4.9 V or more?*

   **YES**—Go to step 3.

   **NO**—Intermittent failure, the system is OK at this time. Check for poor connections or loose terminals at APP sensor B and the PCM.■
3. Turn the ignition switch OFF.
4. Disconnect the APP sensor 6P connector.
5. Turn the ignition switch ON (II).
6. Measure voltage between APP sensor 6P connector terminals No. 5 and No. 6.

**APP SENSOR 6P CONNECTOR**

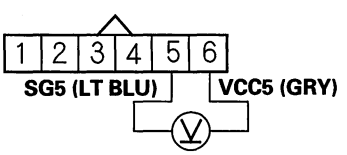


Wire side of female terminals

*Is there about 5 V?*

**YES**—Go to step 12.

**NO**—Go to step 7.

7. Turn the ignition switch OFF.
8. Jump the SCS line with the HDS.
9. Disconnect PCM connector A (44P).
10. Connect APP sensor 6P connector terminal No. 5 to body ground with a jumper wire.

**APP SENSOR 6P CONNECTOR**

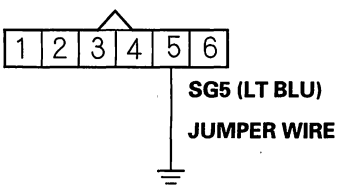


Wire side of female terminals

11. Check for continuity between PCM connector terminal A34 and body ground.

**PCM CONNECTOR A (44P)**

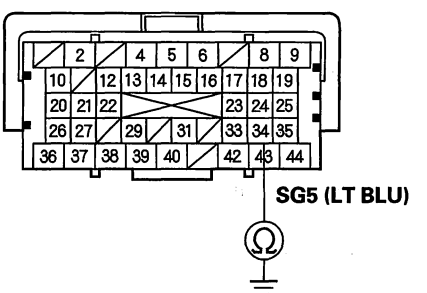


Terminal side of female terminals

*Is there continuity?*

**YES**—Go to step 19.

**NO**—Repair open in the wire between the PCM (A34) and APP sensor B, then go to step 14.



BACK

Protected by AR

12. Turn the ignition switch OFF.

13. Replace the accelerator pedal module (see page 11-295).

14. Reconnect all connectors.

15. Turn the ignition switch ON (II).

16. Reset the PCM with the HDS.

17. Do the PCM idle learn procedure (see page 11-339).

18. Check for Temporary DTCs or DTCs with the HDS.

    *Is DTC P2128 indicated?*

    **YES**—Check for poor connections or loose terminals at APP sensor B and the PCM, then go to step 1.

    **NO**—Troubleshooting is complete. If any other Temporary DTCs or DTCs are indicated, go to the indicated DTC's troubleshooting. ■

19. Reconnect all connectors.

20. Update the PCM if it does not have the latest software (see page 11-7), or substitute a known-good PCM (see page 11-8).

21. Check for Temporary DTCs or DTCs with the HDS.

    *Is DTC P2128 indicated?*

    **YES**—Check for poor connections or loose terminals at APP sensor B and the PCM. If the PCM was updated, substitute a known-good PCM (see page 11-8), then recheck. If the PCM was substituted, go to step 1.

    **NO**—If the PCM was updated, troubleshooting is complete. If the PCM was substituted, replace the original PCM (see page 11-252). If any other Temporary DTCs or DTCs are indicated, go to the indicated DTC's troubleshooting. ■

Protected by AR



## DTC Troubleshooting (cont'd)

**DTC P2135:** TP Sensor A/B Incorrect Voltage Correlation

**⚠CAUTION**

Do not insert your fingers into the installed throttle body when you turn the ignition switch ON (II) or while the ignition switch is ON (II). If you do, you will seriously injure your fingers if the throttle valve is activated.

NOTE: Before you troubleshoot, record all freeze data and any on-board snapshot, and review the general troubleshooting information (see page 11-3).

1. Turn the ignition switch ON (II).
2. Clear the DTC with the HDS.
3. Do the ETCS TEST in the INSPECTION MENU with the HDS.
4. Check for Temporary DTCs or DTCs with the HDS.

   *Is DTC P2135 indicated?*

   **YES**—Go to step 5.

   **NO**—Intermittent failure, the system is OK at this time. Check for poor connections or loose terminals at the throttle body and the PCM.■

5. Turn the ignition switch OFF.
6. Remove the charge air cooler (see page 9-7) and intake air duct (charge air cooler outlet tube) (see page 9-11).
7. Turn the ignition switch ON (II).
8. Visually check the throttle valve operation while you clear the DTC with the HDS.

   *Does the valve temporarily move to its fully closed position?*

   **YES**—Go to step 15.

   **NO**—Go to step 9.

9. Turn the ignition switch OFF.
10. Jump the SCS line with the HDS.
11. Disconnect PCM connector C (44P).
12. Check for continuity between PCM connector terminals C20 and C21.

**PCM CONNECTOR C (44P)**

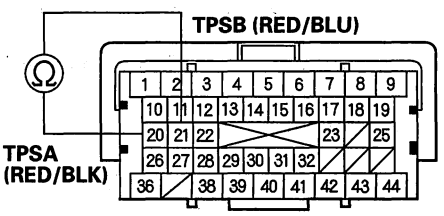


Terminal side of female terminals

*Is there continuity?*

**YES**—Go to step 13.

**NO**—Go to step 22.



BACK

Protected by AR

13. Disconnect the throttle body 6P connector.

14. Check for continuity between PCM connector terminals C20 and C21.

**PCM CONNECTOR C (44P)**

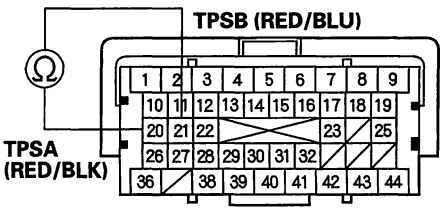


Terminal side of female terminals

*Is there continuity?*

**YES**—Repair short in the wires between the PCM C20 (TPSA line) and the C21 (TPSB line), then go to step 17.

**NO**—Go to step 15.

15. Turn the ignition switch OFF.

16. Replace the throttle body (see page 11-394).

17. Reconnect all connectors.

18. Turn the ignition switch ON (II).

19. Reset the PCM with the HDS.

20. Do the PCM idle learn procedure (see page 11-339).

21. Check for Temporary DTCs or DTCs with the HDS.

*Is DTC P2135 indicated?*

**YES**—Check for poor connections or loose terminals at the throttle body and the PCM, then go to step 1.

**NO**—Troubleshooting is complete. If any other Temporary DTCs or DTCs are indicated, go to the indicated DTC's troubleshooting. ■

22. Reconnect all connectors.

23. Update the PCM if it does not have the latest software (see page 11-7), or substitute a known-good PCM (see page 11-8).

24. Check for Temporary DTCs or DTCs with the HDS.

*Is DTC P2135 indicated?*

**YES**—Check for poor connections or loose terminals at the throttle body and the PCM. If the PCM was updated, substitute a known-good PCM (see page 11-8), then recheck. If the PCM was substituted, go to step 1.

**NO**—If the PCM was updated, troubleshooting is complete. If the PCM was substituted, replace the original PCM (see page 11-252). If any other Temporary DTCs or DTCs are indicated, go to the indicated DTC's troubleshooting. ■

Protected by AR



## DTC Troubleshooting (cont'd)

### DTC P2138: APP Sensor A/B (TP Sensor D/E) Incorrect Voltage Correlation

NOTE: Before you troubleshoot, record all freeze data and any on-board snapshot, and review the general troubleshooting information (see page 11-3).

1. Turn the ignition switch ON (II).
2. Clear the DTC with HDS.
3. Press the accelerator pedal to the floor.
4. Check for Temporary DTCs or DTCs with the HDS.

   *Is DTC P2138 indicated?*

   **YES**—Go to step 5.

   **NO**—Intermittent failure, the system is OK at this time. Check for poor connections or loose terminals at the APP sensor and the PCM. ■

5. Check APP SENSOR A and APP SENSOR B in the DATA LIST with the HDS.

   *Are they the same voltage?*

   **YES**—Go to step 6.

   **NO**—Go to step 12.

6. Turn the ignition switch OFF.
7. Jump the SCS line with the HDS.
8. Disconnect PCM connector A (44P).
9. Check for continuity between PCM connector terminals A17 and A18.

**PCM CONNECTOR A (44P)**

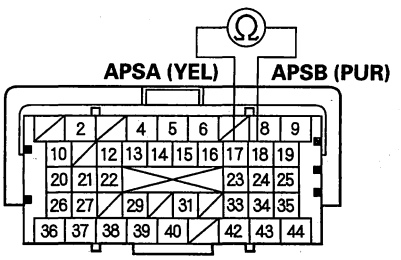


Terminal side of female terminals

*Is there continuity?*

**YES**—Go to step 10.

**NO**—Go to step 22.

10. Disconnect the APP sensor 6P connector.
11. Check for continuity between PCM connector terminals A17 and A18.

**PCM CONNECTOR A (44P)**

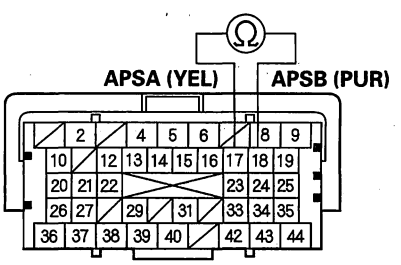


Terminal side of female terminals

*Is there continuity?*

**YES**—Repair short in the wires between PCM connector terminals A17 (APSA line) and A18 (APSB line), then go to step 14.

**NO**—Go to step 13.



BACK

Protected by AR

12. Turn the ignition switch OFF.

13. Replace the accelerator pedal module (see page 11-295).

14. Reconnect all connectors.

15. Turn the ignition switch ON (II).

16. Reset the PCM with the HDS.

17. Do the PCM idle learn procedure (see page 11-339).

18. Turn the ignition switch OFF.

19. Turn the ignition switch ON (II).

20. Press the accelerator pedal to the floor.

21. Check for Temporary DTCs or DTCs with the HDS.

    *Is DTC P2138 indicated?*

    **YES**—Check for poor connections or loose terminals at the APP sensor A/B and the PCM, then go to step 1.

    **NO**—Troubleshooting is complete. If any other Temporary DTCs or DTCs are indicated, go to the indicated DTC's troubleshooting.■

22. Reconnect all connectors.

23. Update the PCM if it does not have the latest software (see page 11-7), or substitute a known-good PCM (see page 11-8).

24. Turn the ignition switch OFF.

25. Turn the ignition switch ON (II).

26. Press the accelerator pedal to the floor.

27. Check for Temporary DTCs or DTCs with the HDS.

    *Is DTC P2138 indicated?*

    **YES**—Check for poor connections or loose terminals at APP sensor A/B and the PCM. If the PCM was updated, substitute a known-good PCM (see page 11-8), then go to step 24. If the PCM was substituted, go to step 1.

    **NO**—If the PCM was updated, troubleshooting is complete. If the PCM was substituted, replace the original PCM (see page 11-252). If any other Temporary DTCs or DTCs are indicated, go to the indicated DTC's troubleshooting.■

Protected by AR



## DTC Troubleshooting (cont'd)

**DTC P2176:** Throttle Actuator Control System Idle Position Not Learned

**⚠CAUTION**

Do not insert your fingers into the installed throttle body when you turn the ignition switch ON (II) or while the ignition switch is ON (II). If you do, you will seriously injure your fingers if the throttle valve is activated.

NOTE:
- Before you troubleshoot, record all freeze data and any on-board snapshot, and review the general troubleshooting information (see page 11-3).
- If DTC P2135 is stored at the same time as DTC P2176, troubleshoot DTC P2135 first, then recheck for DTC P2176.

1. Turn the ignition switch ON (II).
2. Clear the DTC with the HDS.
3. Turn the ignition switch OFF.
4. Turn the ignition switch ON (II), and wait 10 seconds.
5. Check for Temporary DTCs or DTCs with the HDS.

   *Is DTC P2176 indicated?*

   **YES**—Go to step 6.

   **NO**—Intermittent failure, the system is OK at this time. Check for poor connections or loose terminals at the throttle body and the PCM, then clean the throttle body (see page 11-394).■
6. Turn the ignition switch OFF.
7. Remove the charge air cooler (see page 9-7) and intake air duct (charge air cooler outlet tube) (see page 9-11).
8. Turn the ignition switch ON (II).
9. Clear the DTC with the HDS.
10. Visually check the throttle valve operation while doing the ETCS TEST in the INSPECTION MENU with the HDS.

    *Does the throttle valve move to its fully closed position?*

    **YES**—Go to step 11.

    **NO**—Go to step 12.
11. Check for sludge or carbon on the throttle valve.

    *Is there sludge or carbon on the throttle valve?*

    **YES**—Clean the throttle body (see page 11-394), then go to step 21.

    **NO**—Go to step 18.
12. Turn the ignition switch OFF.
13. Disconnect the throttle body 6P connector.
14. Jump the SCS line with the HDS.
15. Disconnect PCM connector C (44P).
16. Connect throttle body 6P connector terminals No. 5 and No. 6 with a jumper wire.

**THROTTLE BODY 6P CONNECTOR**

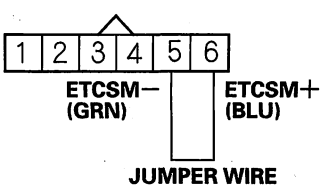


Wire side of female terminals



BACK

Protected by AR

17. Check for continuity between PCM connector terminals C3 and C4.

**PCM CONNECTOR C (44P)**

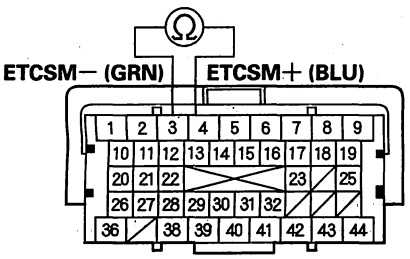


Terminal side of female terminals

*Is there continuity?*

**YES**—Go to step 27.

**NO**—Repair open in the wires between the throttle body and the PCM (C3, C4), then go to step 20.

18. Turn the ignition switch OFF.

19. Replace the throttle body (see page 11-396).

20. Reconnect all connectors.

21. Turn the ignition switch ON (II).

22. Reset the PCM with the HDS.

23. Do the PCM idle learn procedure (see page 11-339).

24. Turn the ignition switch OFF.

25. Turn the ignition switch ON (II), and wait 10 seconds.

26. Check for Temporary DTCs or DTCs with the HDS.

*Is DTC P2176 indicated?*

**YES**—Check for poor connections or loose terminals at the throttle body and the PCM, then clean the throttle body (see page 11-394), and go to step 1.

**NO**—Troubleshooting is complete. If any other Temporary DTCs or DTCs are indicated, go to the indicated DTC's troubleshooting. ■

27. Reconnect all connectors.

28. Update the PCM if it does not have the latest software (see page 11-7), or substitute a known-good PCM (see page 11-8).

29. Check for Temporary DTCs or DTCs with the HDS.

*Is DTC P2176 indicated?*

**YES**—Check for poor connections or loose terminals at the throttle body and the PCM. If the PCM was updated, substitute a known-good PCM (see page 11-8), then recheck. If the PCM was substituted, go to step 1.

**NO**—If the PCM was updated, troubleshooting is complete. If the PCM was substituted, replace the original PCM (see page 11-252). If any other Temporary DTCs or DTCs are indicated, go to the indicated DTC's troubleshooting. ■

Protected by AR



## APP Sensor Signal Inspection

NOTE:
- This procedure checks the APP sensor in its fully closed position. In any other position, the APP sensor stores DTCs which are covered in other troubleshooting procedures.
- Check for Temporary DTCs or DTCs with the HDS before doing this procedure. If any DTCs are indicated, troubleshoot them first, then do this procedure.
- Press the accelerator pedal several times, to check its operation. If it does not operate smoothly, check the pedal. If you find a problem, replace the accelerator pedal module (see page 11-295).

1. Connect the HDS to the data link connector (DLC) (A) located under the driver's side of the dashboard.

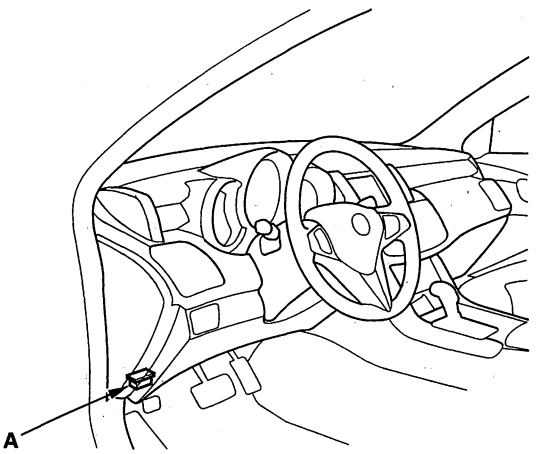


2. Turn the ignition switch ON (II).

3. Make sure the HDS communicates with the PCM. If it doesn't, go to the DLC circuit troubleshooting (see page 11-229).

4. Make sure the accelerator pedal is not pressed, then check the APP SENSOR in the DATA LIST with the HDS.

   - If it is 0 %, the APP sensor is OK.
   - If it is not 0 %, update the PCM if it does not have the latest software (see page 11-7), or substitute a known-good PCM (see page 11-8), then go to step 5.

5. Make sure the accelerator pedal is not pressed, then check the APP SENSOR in the DATA LIST with the HDS.

   - If it is 0 %, the APP sensor is OK.
   - If it is not 0 %, replace the accelerator pedal module (see page 11-295), then go to step 1.



BACK

Protected by AR

## Accelerator Pedal Module Removal/Installation

1. Disconnect the accelerator pedal module 6P connector (A).

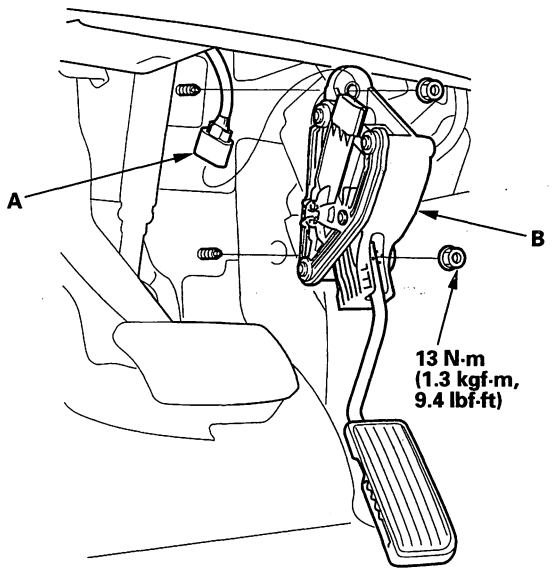


2. Remove the accelerator pedal module (B).

   NOTE: The APP sensor is not available separately. Do not disassemble the accelerator pedal module.

3. Install the parts in the reverse order of removal.

Protected by AR



## Component Location Index

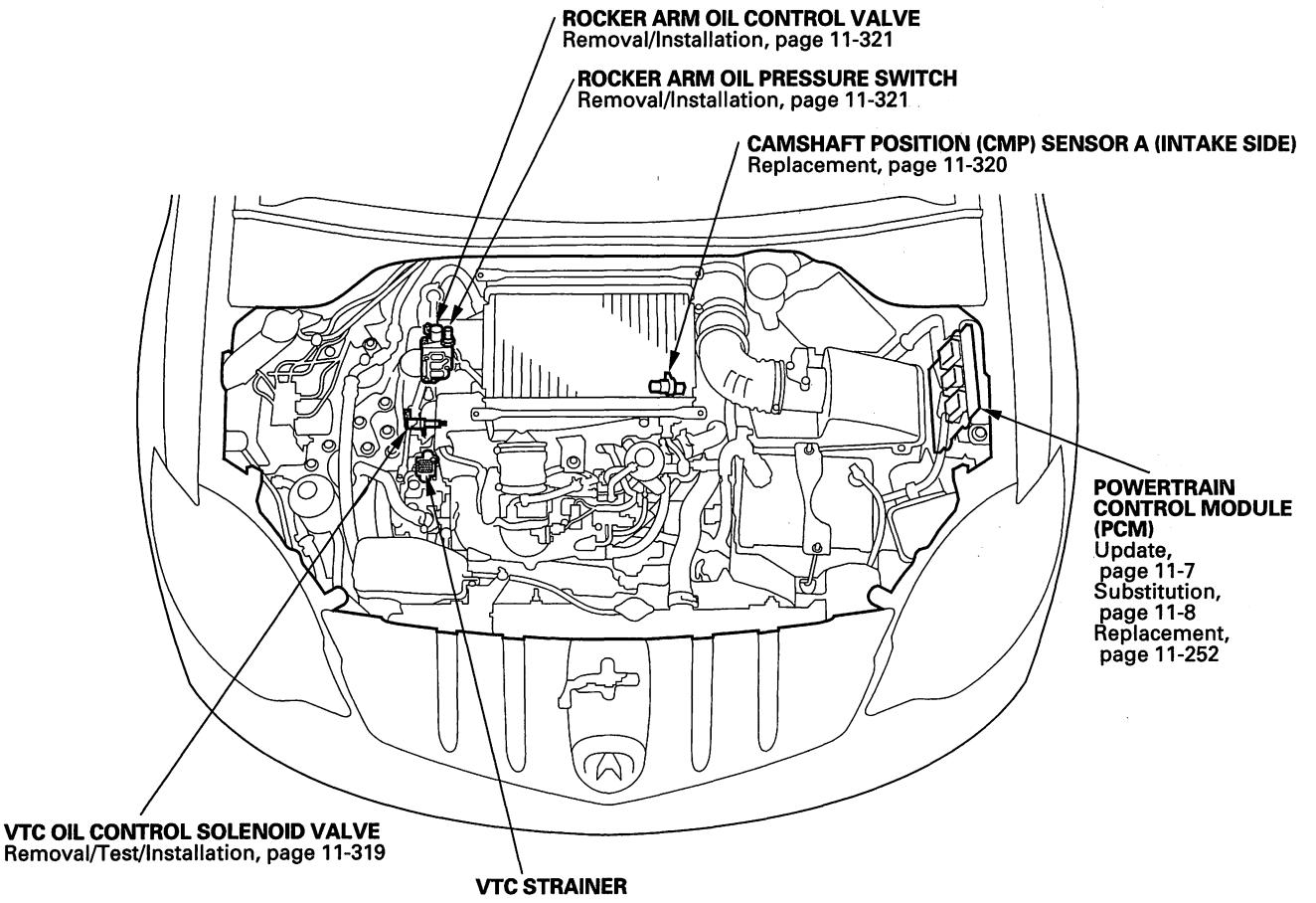




BACK

Protected by AR



## **DTC P0010:** VTC Oil Control Solenoid Valve Malfunction

NOTE: Before you troubleshoot, record all freeze data and any on-board snapshot, and review the general troubleshooting information (see page 11-3).

1. Turn the ignition switch ON (II).
2. Clear the DTC with the HDS.
3. Start the engine. Hold the engine speed at 3,000 rpm without load (in Park or neutral) until the radiator fan comes on, then let it idle.
4. Do the VTC TEST in the INSPECTION MENU with the HDS.
5. Check for Temporary DTCs or DTCs with the HDS.

   *Is DTC P0010 indicated?*

   **YES**—Go to step 6.

   **NO**—Intermittent failure, the system is OK at this time. Check for poor connections or loose terminals at the VTC oil control solenoid valve and the PCM. ■

6. Turn the ignition switch OFF.
7. Disconnect the VTC oil control solenoid valve 2P connector.
8. Measure resistance between VTC oil control solenoid valve 2P connector terminals No. 1 and No. 2.

**VTC OIL CONTROL SOLENOID VALVE 2P CONNECTOR**

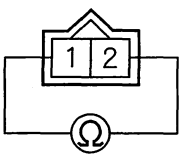


Terminal side of male terminals

*Is there 6.75—8.25 Ω at room temperature?*

**YES**—Go to step 9.

**NO**—Go to step 14.

(cont'd)

Protected by AR



## DTC Troubleshooting (cont'd)

9. Check for continuity between VTC oil control solenoid valve 2P connector terminal No. 1 and body ground.

**VTC OIL CONTROL SOLENOID VALVE 2P CONNECTOR**

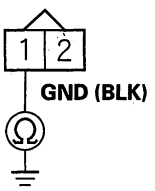


Wire side of female terminals

*Is there continuity?*

**YES**—Go to step 10.

**NO**—Repair open in the wire between the VTC oil control solenoid valve and G101 (see page 22-18), then go to step 15.

10. Jump the SCS line with the HDS.

11. Disconnect PCM connector C (44P).

12. Check for continuity between PCM connector terminal C23 and body ground.

**PCM CONNECTOR C (44P)**

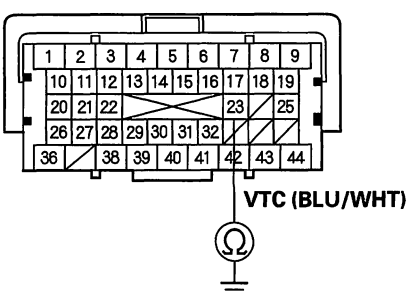


Terminal side of female terminals

*Is there continuity?*

**YES**—Repair short in the wire between the PCM (C23) and the VTC oil control solenoid valve, then go to step 15.

**NO**—Go to step 13.

13. Check for continuity between VTC oil control solenoid valve 2P connector terminal No. 2 and PCM connector terminal C23.

**VTC OIL CONTROL SOLENOID VALVE 2P CONNECTOR**

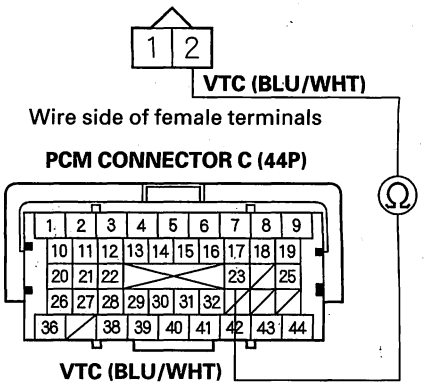


Terminal side of female terminals

*Is there continuity?*

**YES**—Go to step 22.

**NO**—Repair open in the wire between the PCM (C23) and the VTC oil control solenoid valve, then go to step 15.

14. Replace the VTC oil control solenoid valve (see page 11-319).

15. Reconnect all connectors.

16. Turn the ignition switch ON (II).

17. Reset the PCM with the HDS.

18. Do the PCM idle learn procedure (see page 11-339).

19. Do the VTC TEST in the INSPECTION MENU with the HDS.



BACK

Protected by AR

20. Check for Temporary DTCs or DTCs with the HDS.

    *Is DTC P0010 indicated?*

    **YES**—Check for poor connections or loose terminals at the VTC oil control solenoid valve and the PCM, then go to step 1.

    **NO**—Go to step 21.

21. Monitor the OBD STATUS for DTC P0010 in the DTCs MENU with the HDS.

    *Does the screen indicate PASSED?*

    **YES**—Troubleshooting is complete. If any other Temporary DTCs or DTCs were indicated in step 20, go to the indicated DTC's troubleshooting.■

    **NO**—If the screen indicates FAILED, check for poor connections or loose terminals at the VTC oil control solenoid valve and the PCM, then go to step 1. If the screen indicates NOT COMPLETED, go to step 19.

22. Reconnect all connectors.

23. Update the PCM if it does not have the latest software (see page 11-7), or substitute a known-good PCM (see page 11-8).

24. Do the VTC TEST in the INSPECTION MENU with the HDS.

25. Check for Temporary DTCs or DTCs with the HDS.

    *Is DTC P0010 indicated?*

    **YES**—Check for poor connections or loose terminals at the VTC oil control solenoid valve and the PCM. If the PCM was updated, substitute a known-good PCM (see page 11-8), then go to step 24. If the PCM was substituted, go to step 1.

    **NO**—Go to step 26.

26. Monitor the OBD STATUS for DTC P0010 in the DTCs MENU with the HDS.

    *Does the screen indicate PASSED?*

    **YES**—If the PCM was updated, troubleshooting is complete. If the PCM was substituted, replace the original PCM (see page 11-252). If any other Temporary DTCs or DTCs were indicated in step 25, go to the indicated DTC's troubleshooting.■

    **NO**—If the screen indicates FAILED, check for poor connections or loose terminals at the VTC oil control solenoid valve and the PCM. If the PCM was updated, substitute a known-good PCM (see page 11-8), then go to step 24. If the PCM was substituted, go to step 1. If the screen indicates NOT COMPLETED, go to step 24.

Protected by AR



## DTC Troubleshooting (cont'd)

### DTC P0011: VTC System Malfunction

NOTE: Before you troubleshoot, record all freeze data and any on-board snapshot, and review the general troubleshooting information (see page 11-3).

1. Turn the ignition switch ON (II).
2. Clear the DTC with the HDS.
3. Start the engine.
4. Watch the low oil pressure indicator with the engine running.

   *Is the low oil pressure indicator on?*

   **YES**—Check the oil pressure (see page 8-9), then go to step 15.

   **NO**—Go to step 5.
5. Do the VTC TEST in the INSPECTION MENU with the HDS.

   *Is the result OK?*

   **YES**—Go to step 6.

   **NO**—Go to step 9.
6. Test-drive at a steady speed between 25—75 mph (40—120 km/h) for 10 minutes.
7. Check the VTC STATUS in the DATA LIST with the HDS.

   *Does it indicate ON?*

   **YES**—Go to step 8.

   **NO**—Go to step 6 and recheck.
8. Monitor the OBD STATUS for DTC P0011 in the DTCs MENU with the HDS.

   *Does the screen indicate FAILED?*

   **YES**—Go to step 9.

   **NO**—If the screen indicates PASSED, intermittent failure, the system is OK at this time. If the screen indicates NOT COMPLETED, go to step 5 and recheck.
9. Turn the ignition switch OFF.
10. Remove the drive belt auto-tensioner (see page 4-33).
11. Remove the VTC strainer (A), and check it for clogging.

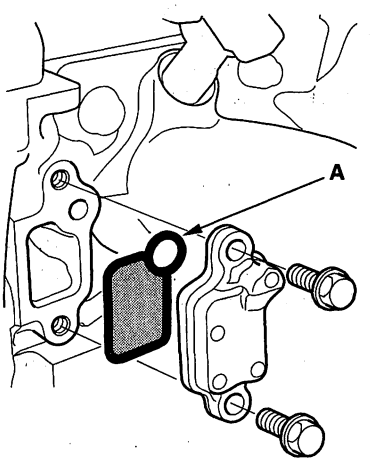


   *Is the strainer OK?*

   **YES**—Go to step 12.

   **NO**—Clean the VTC strainer, replace the engine oil filter and the engine oil, then go to step 14.
12. Test the VTC oil control solenoid valve (see page 11-319).

   *Is the VTC oil control solenoid valve OK?*

   **YES**—Go to step 13.

   **NO**—Replace the VTC oil control solenoid valve (see page 11-319), then go to step 14.



BACK

Protected by AR

13. Inspect the VTC actuator (see page 6-8).

    *Is the VTC actuator OK?*

    **YES**—Check the VTC system oil passages, then go to step 14.

    **NO**—Replace the VTC actuator (see page 6-35), then go to step 14.

14. Turn the ignition switch ON (II).

15. Reset the PCM with the HDS.

16. Clear the CKP pattern with the HDS.

17. Do the PCM idle learn procedure (see page 11-339).

18. Do the CKP pattern learn procedure (see page 11-4).

19. Do the VTC TEST in the INSPECTION MENU with the HDS.

20. Check for Temporary DTCs or DTCs with the HDS.

    *Is DTC P0011 indicated?*

    **YES**—Check for poor connections or loose terminals at the VTC oil control solenoid valve and the PCM, then go to step 1.

    **NO**—Go to step 21.

21. Monitor the OBD STATUS for DTC P0011 in the DTCs MENU with the HDS.

    *Does the screen indicate PASSED?*

    **YES**—Troubleshooting is complete. If any other Temporary DTCs or DTCs were indicated in step 20, go to the indicated DTC's troubleshooting. ■

    **NO**—If the screen indicates FAILED, check for poor connections or loose terminals at the VTC oil control solenoid valve and the PCM, then go to step 1. If the screen indicates NOT COMPLETED, go to step 19.

Protected by AR



## DTC Troubleshooting (cont'd)

### DTC P0340: CMP Sensor A No Signal

NOTE: Before you troubleshoot, record all freeze data and any on-board snapshot, and review the general troubleshooting information (see page 11-3).

1. Turn the ignition switch ON (II).
2. Clear the DTC with the HDS.
3. Start the engine.
4. Check for Temporary DTCs or DTCs with the HDS.

   *Is DTC P0340 indicated?*

   **YES**—Go to step 5.

   **NO**—Intermittent failure, the system is OK at this time. Check for poor connections or loose terminals at CMP sensor A and the PCM.■

5. Turn the ignition switch OFF.
6. Disconnect the CMP sensor A 3P connector.
7. Turn the ignition switch ON (II).
8. Measure voltage between CMP sensor A 3P connector terminal No. 3 and body ground.

**CMP SENSOR A 3P CONNECTOR**

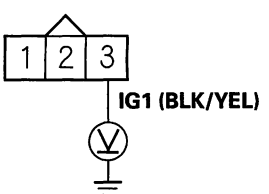


Wire side of female terminals

*Is there battery voltage?*

**YES**—Go to step 9.

**NO**—Repair open in the wire between CMP sensor A and the No. 3 IG1 ACG (15 A) fuse, then go to step 18.

9. Measure voltage between CMP sensor A 3P connector terminal No. 1 and body ground.

**CMP SENSOR A 3P CONNECTOR**

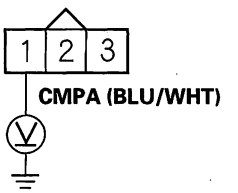


Wire side of female terminals

*Is there about 5 V?*

**YES**—Go to step 10.

**NO**—Go to step 11.

10. Measure voltage between CMP sensor A 3P connector terminals No. 2 and No. 3.

**CMP SENSOR A 3P CONNECTOR**

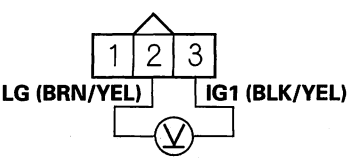


Wire side of female terminals

*Is there battery voltage?*

**YES**—Go to step 16.

**NO**—Repair open in the wire between CMP sensor A and G101 (see page 22-18), then go to step 18.



BACK

Protected by AR

11. Turn the ignition switch OFF.

12. Jump the SCS line with the HDS.

13. Disconnect PCM connector C (44P).

14. Check for continuity between PCM connector terminal C41 and body ground.

**PCM CONNECTOR C (44P)**

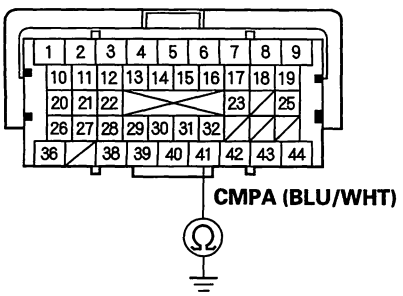


Terminal side of female terminals

*Is there continuity?*

**YES**—Repair short in the wire between the PCM (C41) and CMP sensor A, then go to step 18.

**NO**—Go to step 15.

15. Check for continuity between CMP sensor A 3P connector terminal No. 1 and PCM connector terminal C41.

**CMP SENSOR A 3P CONNECTOR**

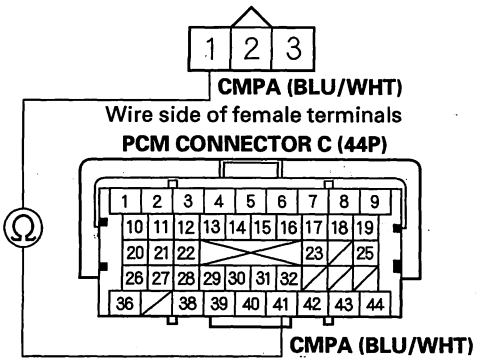


Terminal side of female terminals

*Is there continuity?*

**YES**—Go to step 23.

**NO**—Repair open in the wire between the PCM (C41) and CMP sensor A, then go to step 18.

(cont'd)

Protected by AR



## DTC Troubleshooting (cont'd)

16. Turn the ignition switch OFF.

17. Replace CMP sensor A (see page 11-320).

18. Reconnect all connectors.

19. Turn the ignition switch ON (II).

20. Reset the PCM with the HDS.

21. Do the PCM idle learn procedure (see page 11-339).

22. Check for Temporary DTCs or DTCs with the HDS.

    *Is DTC P0340 indicated?*

    **YES**—Check for poor connections or loose terminals at CMP sensor A and the PCM, then go to step 1.

    **NO**—Troubleshooting is complete. If any other Temporary DTCs or DTCs are indicated, go to the indicated DTC's troubleshooting.■

23. Reconnect all connectors.

24. Update the PCM if it does not have the latest software (see page 11-7), or substitute a known-good PCM (see page 11-8).

25. Check for Temporary DTCs or DTCs with the HDS.

    *Is DTC P0340 indicated?*

    **YES**—Check for poor connections or loose terminals at CMP sensor A and the PCM. If the PCM was updated, substitute a known-good PCM (see page 11-8), then recheck. If the PCM was substituted, go to step 1.

    **NO**—If the PCM was updated, troubleshooting is complete. If the PCM was substituted, replace the original PCM (see page 11-252). If any other Temporary DTCs or DTCs are indicated, go to the indicated DTC's troubleshooting.■



BACK

Protected by AR

## **DTC P0341:** CMP Sensor A and CKP Sensor Incorrect Phase Detected

NOTE: Before you troubleshoot, record all freeze data and any on-board snapshot, and review the general troubleshooting information (see page 11-3).

1. Turn the ignition switch ON (II).
2. Clear the DTC with the HDS.
3. Test-drive at a steady speed between 19—38 mph (30—60 km/h) for 10 minutes.
4. Check for Temporary DTCs or DTCs with the HDS.

   *Is DTC P0341 indicated?*

   **YES**—Go to step 9.

   **NO**—Go to step 5.
5. Do the VTC TEST in the INSPECTION MENU with the HDS.

   *Is the result OK?*

   **YES**—Go to step 6.

   **NO**—Go to step 9.
6. Test-drive at a steady speed between 19—38 mph (30—60 km/h) for 10 minutes.
7. Check the VTC STATUS in the DATA LIST with the HDS.

   *Does it indicate ON?*

   **YES**—Go to step 8.

   **NO**—Go to step 6 and recheck.
8. Monitor the OBD STATUS for DTC P0341 in the DTCs MENU with the HDS.

   *Does the screen indicate FAILED?*

   **YES**—Go to step 9.

   **NO**—If the screen indicates PASSED, intermittent failure, the system is OK at this time. Check for poor connections or loose terminals at the VTC oil control solenoid valve and the PCM. If the screen indicates NOT COMPLETED, go to step 6 and recheck.
9. Turn the ignition switch OFF.
10. Test the VTC oil control solenoid valve (see page 11-319).

    *Is the VTC oil control solenoid valve OK?*

    **YES**—Go to step 11.

    **NO**—Replace the VTC oil control solenoid valve (see page 11-319), then go to step 14.
11. Check the camshaft timing (see step 5 on page 6-13).

    *Is the camshaft timing OK?*

    **YES**—Go to step 12.

    **NO**—Reset the camshaft timing (see page 6-13), then go to step 14.
12. Check for damage or stretch at the cam chain (see page 6-24).

    *Is the cam chain damaged?*

    **YES**—Replace the cam chain and auto-tensioner (see page 6-22), then go to step 14.

    **NO**—Go to step 13.
13. Inspect the VTC actuator (see page 6-8).

    *Is the actuator OK?*

    **YES**—Go to step 14.

    **NO**—Replace the VTC actuator (see page 6-35), then go to step 14.

(cont'd)

Protected by AR



## DTC Troubleshooting (cont'd)

14. Turn the ignition switch ON (II).

15. Reset the PCM with the HDS.

16. Clear the CKP pattern with the HDS.

17. Do the PCM idle learn procedure (see page 11-339).

18. Do the CKP pattern learn procedure (see page 11-4).

19. Test-drive at a steady speed between 19—38 mph (30—60 km/h) for 10 minutes.

20. Check for Temporary DTCs or DTCs with the HDS.

    *Is DTC P0341 indicated?*

    **YES**—Check for poor connections or loose terminals at the VTC oil control solenoid valve and the PCM, then go to step 1.

    **NO**—Go to step 21.

21. Monitor the OBD STATUS for DTC P0341 in the DTCs MENU with the HDS.

    *Does the screen indicate PASSED?*

    **YES**—Troubleshooting is complete. If any other Temporary DTCs or DTCs were indicated in step 20, go to the indicated DTC's troubleshooting. ■

    **NO**—If the screen indicates FAILED, check for poor connections or loose terminals at the VTC oil control solenoid valve and the PCM, then go to step 1. If the screen indicates NOT COMPLETED, go to step 19.



BACK

Protected by AR

## **DTC P0344:** CMP Sensor A Circuit Intermittent Interruption

NOTE: Before you troubleshoot, record all freeze data and any on-board snapshot, and review the general troubleshooting information (see page 11-3).

1. Turn the ignition switch ON (II).

2. Clear the DTC with the HDS.

3. Start the engine, and let it idle for 10 seconds.

4. Check the CMP NOISE A count in the DATA LIST with the HDS.

   *Are 0 counts indicated?*

   **YES**—Go to step 7.

   **NO**—Go to step 5.

5. Test-drive the vehicle for several minutes in the range of these recorded freeze data parameters:

   - ENGINE SPEED
   - VSS

6. Check the CMP NOISE A count in the DATA LIST with the HDS.

   *Are 0 counts indicated?*

   **YES**—Go to step 7.

   **NO**—Intermittent failure, the system is OK at this time. Check for poor connections or loose terminals at CMP sensor A and the PCM. ■

7. Check for poor or loose connections and terminals at these locations:

   - CMP sensor A
   - PCM
   - Engine ground
   - Body ground

   *Are the connections and terminals OK?*

   **YES**—Go to step 8.

   **NO**—Repair the connectors or terminals, then go to step 11.

8. Check for damage to the CMP sensor A pulser plate (see page 6-34).

   *Is the pulser plate damaged?*

   **YES**—Replace the CMP sensor A pulser plate (see page 6-34), then go to step 11.

   **NO**—Go to step 9.

9. Turn the ignition switch OFF.

10. Replace CMP sensor A (see page 11-320).

11. Turn the ignition switch ON (II).

12. Reset the PCM with the HDS.

13. Do the PCM idle learn procedure (see page 11-339).

14. Start the engine, and let it idle for 10 seconds.

15. Check for Temporary DTCs or DTCs with the HDS.

    *Is DTC P0344 indicated?*

    **YES**—Check for poor connections or loose terminals at CMP sensor A and the PCM, then go to step 1.

    **NO**—Troubleshooting is complete. If any other Temporary DTCs or DTCs are indicated, go to the indicated DTC's troubleshooting. ■

Protected by AR



## DTC Troubleshooting (cont'd)

### DTC P1009: VTC Advance Malfunction

NOTE:
- Before you troubleshoot, record all freeze data and any on-board snapshot, and review the general troubleshooting information (see page 11-3).
- If DTC P0341 is stored at the same time as DTC P1009, troubleshoot DTC P1009 first, then recheck for DTC P0341.

1. Turn the ignition switch ON (II).
2. Clear the DTC with the HDS.
3. Start the engine.
4. Check for Temporary DTCs or DTCs with the HDS.

   *Is DTC P1009 indicated?*

   **YES**—Go to step 5.

   **NO**—Intermittent failure, the system is OK at this time.■

5. Turn the ignition switch OFF.
6. Remove the drive belt auto-tensioner (see page 4-33).
7. Remove the VTC strainer (A), and check it for clogging.

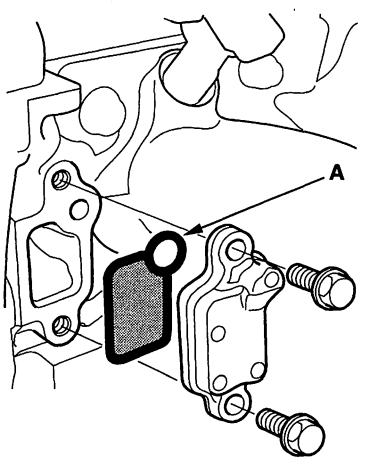


   *Is the strainer OK?*

   **YES**—Go to step 8.

   **NO**—Clean the VTC strainer, replace the engine oil filter and the engine oil, then go to step 10.

8. Test the VTC oil control solenoid valve (see page 11-319).

   *Is the valve OK?*

   **YES**—Go to step 9.

   **NO**—Replace the VTC oil control solenoid valve (see page 11-319), then go to step 10.

9. Inspect the VTC actuator (see page 6-8).

   *Is the actuator OK?*

   **YES**—Check the VTC system oil passages, then go to step 10.

   **NO**—Replace the VTC actuator (see page 6-35), then go to step 10.

10. Turn the ignition switch ON (II).
11. Reset the PCM with the HDS.
12. Clear the CKP pattern with the HDS.
13. Do the PCM idle learn procedure (see page 11-339).
14. Do the CKP pattern learn procedure (see page 11-4).
15. Check for Temporary DTCs or DTCs with the HDS.

    *Is DTC P1009 indicated?*

    **YES**—Check the oil passages at the VTC system, then go to step 1.

    **NO**—Troubleshooting is complete. If any other Temporary DTCs or DTCs are indicated, go to the indicated DTC's troubleshooting.■



BACK

Protected by AR

## **DTC P2646:** Rocker Arm Oil Pressure Switch Circuit Low Voltage

**Special Tools Required**
- Pressure gauge adapter 07NAJ-P07010A
- A/T low pressure gauge w/panel 07406-0070301
- A/T pressure hose 07406-0020201
- A/T pressure hose, 2,210 mm 07MAJ-PY4011A
- A/T pressure adapter 07MAJ-PY40120
- Oil pressure hose 07ZAJ-S5AA200

NOTE: Before you troubleshoot, record all freeze data and any on-board snapshot, and review the general troubleshooting information (see page 11-3).

1. Check the engine oil level.

   *Is the engine oil level OK?*

   **YES**—Go to step 2.

   **NO**—Adjust the engine oil to the proper level, then go to step 20.

2. Turn the ignition switch ON (II).

3. Clear the DTC with the HDS.

4. Do the VTEC TEST in the INSPECTION MENU with the HDS.

   *Is the result OK?*

   **YES**—Intermittent failure, the system is OK at this time. Check for poor connections or loose terminals at the rocker arm oil pressure switch, the rocker arm oil control solenoid, and the PCM. ■

   **NO**—Go to step 5.

5. Turn the ignition switch OFF.

6. Disconnect the rocker arm oil pressure switch 2P connector.

7. Turn the ignition switch ON (II).

8. Check the VTEC PRES SW in the DATA LIST with the HDS.

   *Is SWITCH ON indicated?*

   **YES**—Go to step 16.

   **NO**—Go to step 9.

9. Turn the ignition switch OFF.

10. Remove the charge air cooler cover (see step 1 on page 9-8).

11. Remove the rocker arm oil pressure switch (A), and install the special tools as shown, then install the rocker arm oil pressure switch on the oil pressure gauge attachment (B).

    NOTE: Install the switch in the reverse order of removal with a new O-ring.

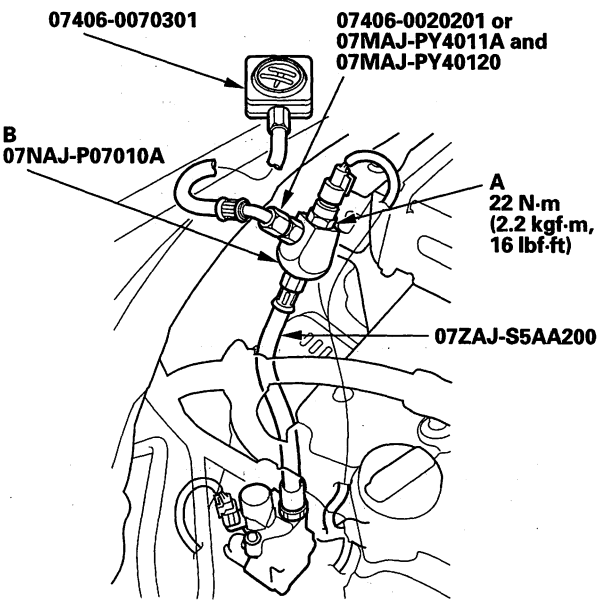


12. Reconnect the rocker arm oil pressure switch 2P connector.

13. Start the engine.

14. Do the VTEC TEST in the INSPECTION MENU with the HDS.

(cont'd)

Protected by AR



## DTC Troubleshooting (cont'd)

15. Check the oil pressure.

    *Does the oil pressure increase to at least 392 kPa (4.0 kgf/cm², 56.9 psi)?*

    **YES**—Replace the rocker arm oil pressure switch (see page 11-321), then go to step 20.

    **NO**—Inspect the VTEC system. If it is OK, replace the rocker arm oil control solenoid (see page 11-321), then go to step 20.

16. Turn the ignition switch OFF.

17. Jump the SCS line with the HDS.

18. Disconnect PCM connector C (44P).

19. Check for continuity between PCM connector terminal C22 and body ground.

**PCM CONNECTOR C (44P)**

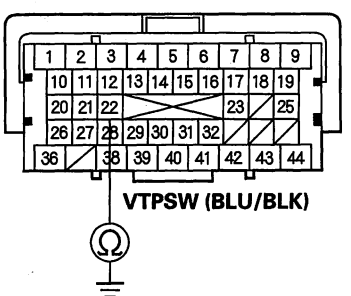


Terminal side of female terminals

*Is there continuity?*

**YES**—Repair short in the wire between the PCM (C22) and the rocker arm oil pressure switch, then go to step 20.

**NO**—Go to step 27.

20. Reconnect all connectors.

21. Turn the ignition switch ON (II).

22. Reset the PCM with the HDS.

23. Do the PCM idle learn procedure (see page 11-339).

24. Do the VTEC TEST in the INSPECTION MENU with the HDS.

25. Check for Temporary DTCs or DTCs with the HDS.

    *Is DTC P2646 indicated?*

    **YES**—Check for poor connections or loose terminals at the rocker arm oil pressure switch, the rocker arm oil control solenoid and the PCM, then go step 1.

    **NO**—Go to step 26.

26. Monitor the OBD STATUS for DTC P2646 in the DTCs MENU with the HDS.

    *Does the screen indicate PASSED?*

    **YES**—Troubleshooting is complete. If any other Temporary DTCs or DTCs were indicated in step 25, go to the indicated DTC's troubleshooting. ■

    **NO**—If the screen indicates FAILED, check for poor connections or loose terminals at the rocker arm oil pressure switch, the rocker arm oil control solenoid, and the PCM, then go to step 1. If the screen indicates NOT COMPLETED, go to step 24.

27. Reconnect all connectors.

28. Update the PCM if it does not have the latest software (see page 11-7), or substitute a known-good PCM (see page 11-8).

29. Do the VTEC TEST in the INSPECTION MENU with the HDS.

30. Check for Temporary DTCs or DTCs with the HDS.

    *Is DTC P2646 indicated?*

    **YES**—Check for poor connections or loose terminals at the rocker arm oil pressure switch, the rocker arm oil control solenoid and the PCM. If the PCM was updated, substitute a known-good PCM (see page 11-8), then go to step 29. If the PCM was substituted, go to step 1.

    **NO**—Go to step 31.



BACK

Protected by AR

31. Monitor the OBD STATUS for DTC P2646 in the DTCs MENU with the HDS.

    *Does the screen indicate PASSED?*

    **YES**—If the PCM was updated, troubleshooting is complete. If the PCM was substituted, replace the original PCM (see page 11-252). If any other Temporary DTCs or DTCs were indicated in step 30, go to the indicated DTC's troubleshooting. ■

    **NO**—If the screen indicates FAILED, check for poor connections or loose terminals at the rocker arm oil pressure switch, the rocker arm oil control solenoid, and the PCM. If the PCM was updated, substitute a known-good PCM (see page 11-8), then go to step 29. If the PCM was substituted, go to step 1. If the screen indicates NOT COMPLETED, go to step 29.

Protected by AR



## DTC Troubleshooting (cont'd)

### DTC P2647: Rocker Arm Oil Pressure Switch Circuit High Voltage

NOTE: Before you troubleshoot, record all freeze data and any on-board snapshot, and review the general troubleshooting information (see page 11-3).

1. Check the engine oil level.

   *Is the engine oil level OK?*

   **YES**—Go to step 2.

   **NO**—Adjust the engine oil to the proper level, then go to step 17.

2. Turn the ignition switch ON (II).

3. Clear the DTC with the HDS.

4. Do the VTEC TEST in the INSPECTION MENU with the HDS.

   *Is the result OK?*

   **YES**—Intermittent failure, the system is OK at this time. Check for poor connections or loose terminals at the rocker arm oil pressure switch, the rocker arm oil control solenoid, and the PCM. ■

   **NO**—Go to step 5.

5. Check the result of step 4.

   - VTEC Switch Failure
   - VTEC Switch Open
   - VTEC Switch SIG Line Open
   - VTEC Switch GND Line Open

   *Is the test result any of above?*

   **YES**—Go to step 6.

   **NO**—Check for poor connections or loose terminals at the rocker arm oil pressure switch. If it is OK, replace the rocker arm oil control valve (see page 11-321), then, go to step 15.

6. Turn the ignition switch OFF.

7. Disconnect the rocker arm oil pressure switch 2P connector.

8. At the rocker arm oil pressure switch side, check for continuity between rocker arm oil pressure switch 2P connector terminals No. 1 and No. 2.

**ROCKER ARM OIL PRESSURE SWITCH 2P CONNECTOR**

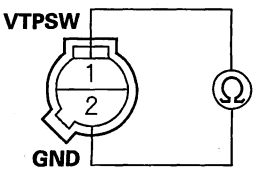


Terminal side of male terminals

*Is there continuity?*

**YES**—Go to step 9.

**NO**—Replace the rocker arm oil pressure switch (see page 11-321), then go to step 16.

9. Turn the ignition switch ON (II).

10. Measure voltage between rocker arm oil pressure switch 2P connector terminal No. 1 and body ground.

**ROCKER ARM OIL PRESSURE SWITCH 2P CONNECTOR**

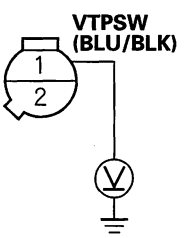


Wire side of female terminals

*Is there battery voltage?*

**YES**—Repair open in the wire between the rocker arm oil pressure switch and G101 (see page 22-18), then go to step 15.

**NO**—Go to step 11.



BACK

Protected by AR

11. Turn the ignition switch OFF.

12. Jump the SCS line with the HDS.

13. Disconnect PCM connector C (44P).

14. Check for continuity between rocker arm oil pressure switch 2P connector terminal No. 1 and PCM connector terminal C22.

**ROCKER ARM OIL PRESSURE SWITCH 2P CONNECTOR**

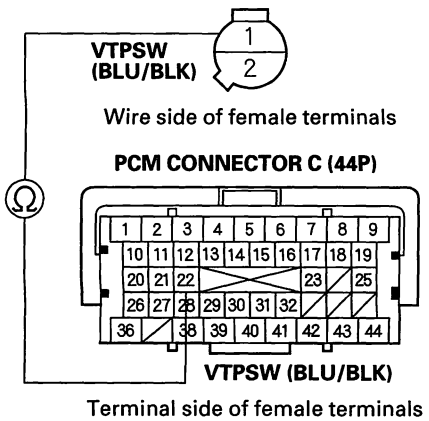


*Is there continuity?*

**YES**—Go to step 22.

**NO**—Repair open in the wire between the PCM (C22) and the rocker arm oil pressure switch, then go to step 16.

15. Turn the ignition switch OFF.

16. Reconnect all connectors.

17. Turn the ignition switch ON (II).

18. Reset the PCM with the HDS.

19. Do the PCM idle learn procedure (see page 11-339).

20. Check for Temporary DTCs or DTCs with the HDS.

*Is DTC P2647 indicated?*

**YES**—Check for poor connections or loose terminals at the rocker arm oil pressure switch, the rocker arm oil control solenoid and the PCM, then go to step 1.

**NO**—Go to step 21.

21. Monitor the OBD STATUS for DTC P2647 in the DTCs MENU with the HDS.

*Does the screen indicate PASSED?*

**YES**—Troubleshooting is complete. If any other Temporary DTCs or DTCs were indicated in step 20, go to the indicated DTC's troubleshooting. ■

**NO**—If the screen indicates FAILED, check for poor connections or loose terminals at the rocker arm oil pressure switch, the rocker arm oil control solenoid, and the PCM, then go to step 1. If the screen indicates NOT COMPLETED, keep idling until a result comes on.

22. Reconnect all connectors.

23. Update the PCM if it does not have the latest software (see page 11-7), or substitute a known-good PCM (see page 11-8).

24. Start the engine, and let it idle.

25. Check for Temporary DTCs or DTCs with the HDS.

*Is DTC P2647 indicated?*

**YES**—Check for poor connections or loose terminals at the rocker arm oil pressure switch, the rocker arm oil control solenoid and the PCM. If the PCM was updated, substitute a known-good PCM (see page 11-8), then go to step 24. If the PCM was substituted, go to step 1.

**NO**—Go to step 26.

(cont'd)

Protected by AR



## DTC Troubleshooting (cont'd)

26. Monitor the OBD STATUS for DTC P2647 in the DTCs MENU with the HDS.

    *Does the screen indicate PASSED?*

    **YES**—If the PCM was updated, troubleshooting is complete. If the PCM was substituted, replace the original PCM (see page 11-252). If any other Temporary DTCs or DTCs were indicated in step 25, go to the indicated DTC's troubleshooting. ■

    **NO**—If the screen indicates FAILED, check for poor connections or loose terminals at the rocker arm oil pressure switch, the rocker arm oil control solenoid, and the PCM. If the PCM was updated, substitute a known-good PCM (see page 11-8), then go to step 24. If the PCM was substituted, go to step 1. If the screen indicates NOT COMPLETED, keep idling until a result comes on.



BACK

Protected by AR

## **DTC P2648:** Rocker Arm Oil Control Solenoid Circuit Low Voltage

NOTE: Before you troubleshoot, record all freeze data and any on-board snapshot, and review the general troubleshooting information (see page 11-3).

1. Turn the ignition switch ON (II).
2. Clear the DTC with the HDS.
3. Do the VTEC TEST in the INSPECTION MENU with the HDS.

   *Is the result OK?*

   **YES**—Intermittent failure, the system is OK at this time. Check for poor connections or loose terminals at the rocker arm oil control solenoid and the PCM. ■

   **NO**—Go to step 4.

4. Turn the ignition switch OFF.
5. Disconnect the rocker arm oil control solenoid 2P connector.
6. At the solenoid side, measure resistance between rocker arm oil control solenoid 2P connector terminals No. 1 and No. 2.

**ROCKER ARM OIL CONTROL SOLENOID 2P CONNECTOR**

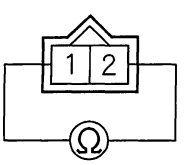


Terminal side of male terminals

*Is there 14—30 Ω at room temperature?*

**YES**—Go to step 7.

**NO**—Go to step 10.

7. Jump the SCS line with the HDS.
8. Disconnect PCM connector B (44P).
9. Check for continuity between PCM connector terminal B34 and body ground.

**PCM CONNECTOR B (44P)**

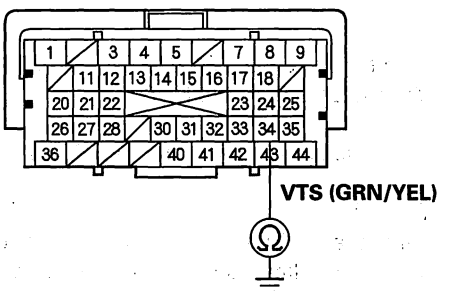


Terminal side of female terminals

*Is there continuity?*

**YES**—Repair short in the wire between the PCM (B34) and the rocker arm oil control solenoid, then go to step 11.

**NO**—Go to step 18.

10. Replace the rocker arm oil control valve (see page 11-321).
11. Reconnect all connectors.
12. Turn the ignition switch ON (II).
13. Reset the PCM with the HDS.
14. Do the PCM idle learn procedure (see page 11-339).
15. Do the VTEC TEST in the INSPECTION MENU with the HDS.

(cont'd)

Protected by AR



## DTC Troubleshooting (cont'd)

16. Check for Temporary DTCs or DTCs with the HDS.

    *Is DTC P2648 indicated?*

    **YES**—Check for poor connections or loose terminals at the rocker arm oil control solenoid and the PCM, then go to step 1.

    **NO**—Go to step 17.

17. Monitor the OBD STATUS for DTC P2648 in the DTCs MENU with the HDS.

    *Does the screen indicate PASSED?*

    **YES**—Troubleshooting is complete. If any other Temporary DTCs or DTCs were indicated in step 16, go to the indicated DTC's troubleshooting. ■

    **NO**—If the screen indicates FAILED, go to step 1 and recheck. If the screen indicates NOT COMPLETED, go to step 15.

18. Reconnect all connectors.

19. Update the PCM if it does not have the latest software (see page 11-7), or substitute a known-good PCM (see page 11-8).

20. Do the VTEC TEST in the INSPECTION MENU with the HDS.

21. Check for Temporary DTCs or DTCs with the HDS.

    *Is DTC P2648 indicated?*

    **YES**—Check for poor connections or loose terminals at the rocker arm oil control solenoid and the PCM. If the PCM was updated, substitute a known-good PCM (see page 11-8), then go to step 20. If the PCM was substituted, go to step 1.

    **NO**—Go to step 22.

22. Monitor the OBD STATUS for DTC P2648 in the DTCs MENU with the HDS.

    *Does the screen indicate PASSED?*

    **YES**—If the PCM was updated, troubleshooting is complete. If the PCM was substituted, replace the original PCM (see page 11-252). If any other Temporary DTCs or DTCs were indicated in step 21, go to the indicated DTC's troubleshooting. ■

    **NO**—If the screen indicates FAILED, check for poor connections or loose terminals at the rocker arm oil control solenoid and the PCM. If the PCM was updated, substitute a known-good PCM (see page 11-8), then go to step 20. If the PCM was substituted, go to step 1. If the screen indicates NOT COMPLETED, go to step 20.



BACK

Protected by AR

## **DTC P2649:** Rocker Arm Oil Control Solenoid Circuit High Voltage

NOTE: Before you troubleshoot, record all freeze data and any on-board snapshot, and review the general troubleshooting information (see page 11-3).

1. Turn the ignition switch ON (II).
2. Clear the DTC with the HDS.
3. Start the engine. Hold the engine speed at 3,000 rpm without load (in Park or neutral) until the radiator fan comes on, then let it idle.
4. Check for Temporary DTCs or DTCs with the HDS.

   *Is DTC P2649 indicated?*

   **YES**—Go to step 5.

   **NO**—Intermittent failure, the system is OK at this time. Check for poor connections or loose terminals at the rocker arm oil control solenoid and the PCM. ■

5. Turn the ignition switch OFF.
6. Disconnect the rocker arm oil control solenoid 2P connector.
7. At the solenoid side, measure resistance between rocker arm oil control solenoid 2P connector terminals No. 1 and No. 2.

**ROCKER ARM OIL CONTROL SOLENOID 2P CONNECTOR**

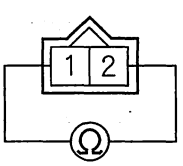


Terminal side of male terminals

*Is there 14—30 Ω at room temperature?*

**YES**—Go to step 8.

**NO**—Go to step 12.

8. Check for continuity between rocker arm oil control solenoid 2P connector terminal No. 1 and body ground.

**ROCKER ARM OIL CONTROL SOLENOID 2P CONNECTOR**

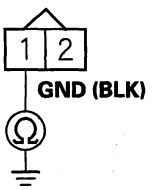


Wire side of female terminals

*Is there continuity?*

**YES**—Go to step 9.

**NO**—Repair open in the wire between the rocker arm oil control solenoid and G101 (see page 22-18), then go to step 13.

9. Jump the SCS line with the HDS.
10. Disconnect PCM connector B (44P).

(cont'd)

Protected by AR



## DTC Troubleshooting (cont'd)

11. Check for continuity between PCM connector terminal B34 and rocker arm oil control solenoid 2P connector terminal No. 2.

**ROCKER ARM OIL CONTROL SOLENOID 2P CONNECTOR**

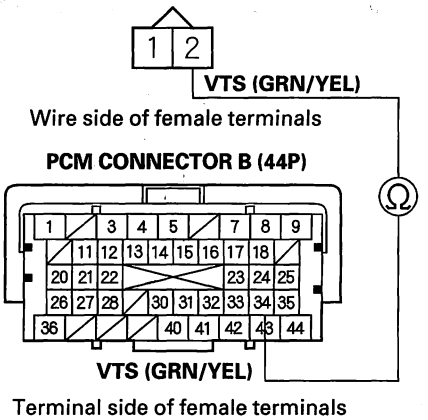


*Is there continuity?*

**YES**—Go to step 19.

**NO**—Repair open in the wire between the PCM (B34) and the rocker arm oil control solenoid, then go to step 13.

12. Replace the rocker arm oil control valve (see page 11-321).

13. Reconnect all connectors.

14. Turn the ignition switch ON (II).

15. Reset the PCM with the HDS.

16. Do the PCM idle learn procedure (see page 11-339).

17. Check for Temporary DTCs or DTCs with the HDS.

*Is DTC P2649 indicated?*

**YES**—Check for poor connections or loose terminals at the rocker arm oil control solenoid and the PCM, then go to step 1.

**NO**—Go to step 18.

18. Monitor the OBD STATUS for DTC P2649 in the DTCs MENU with the HDS.

*Does the screen indicate PASSED?*

**YES**—Troubleshooting is complete. If any other Temporary DTCs or DTCs were indicated in step 17, go to the indicated DTC's troubleshooting. ■

**NO**—If the screen indicates FAILED, go to step 1 and recheck. If the screen indicates NOT COMPLETED, keep idling until a result comes on.

19. Reconnect all connectors.

20. Update the PCM if it does not have the latest software (see page 11-7), or substitute a known-good PCM (see page 11-8).

21. Start the engine, and let it idle.

22. Check for Temporary DTCs or DTCs with the HDS.

*Is DTC P2649 indicated?*

**YES**—Check for poor connections or loose terminals at the rocker arm oil control solenoid and the PCM. If the PCM was updated, substitute a known-good PCM (see page 11-8), then go to step 21. If the PCM was substituted, go to step 1.

**NO**—Go to step 23.

23. Monitor the OBD STATUS for DTC P2649 in the DTCs MENU with the HDS.

*Does the screen indicate PASSED?*

**YES**—If the PCM was updated, troubleshooting is complete. If the PCM was substituted, replace the original PCM (see page 11-252). If any other Temporary DTCs or DTCs were indicated in step 22, go to the indicated DTC's troubleshooting. ■

**NO**—If the screen indicates FAILED, check for poor connections or loose terminals at the rocker arm oil control solenoid and the PCM. If the PCM was updated, substitute a known-good PCM (see page 11-8), then go to step 21. If the PCM was substituted, go to step 1. If the screen indicates NOT COMPLETED, keep idling until a result comes on.



BACK

Protected by AR

## VTC Oil Control Solenoid Valve Removal/Test/Installation

1. Disconnect the VTC oil control solenoid valve 2P connector (A).

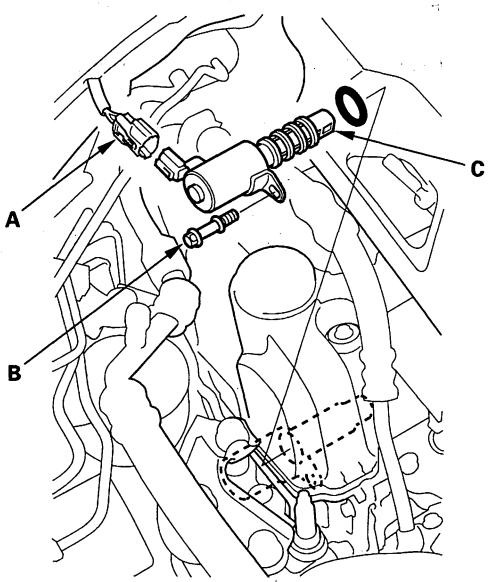


2. Remove the bolt (B) and the VTC oil control solenoid valve (C).

3. Check the VTC oil control solenoid valve strainer for clogging. If the strainer is clogged, replace the VTC oil control solenoid valve.

4. Note the amount of valve opening by observing the position of the piston shoulder (A) through the valve retard drain port. If you see the shoulder of the piston, the valve is open and must be replaced.

**Closed**

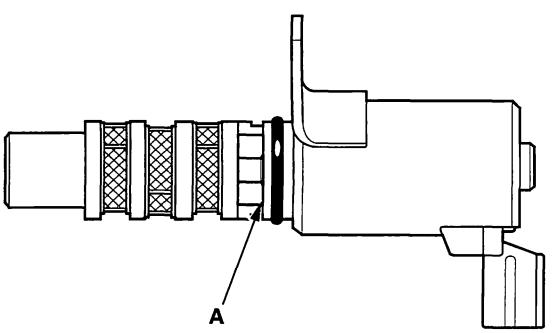


5. Connect the battery positive terminal to VTC oil control solenoid valve 2P connector terminal No. 2.

**VTC OIL CONTROL SOLENOID VALVE 2P CONNECTOR**

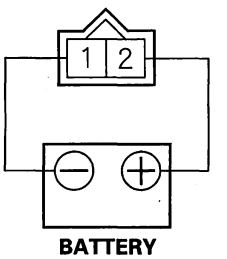


Terminal side of male terminals

6. Connect the battery negative terminal to VTC oil control solenoid valve 2P connector terminal No. 1. Appearance of inner valve (A) in the port should be at least 1/16 in. (1.2 mm). If the inner valve does not open, replace it; then go to step 7.

**Open**

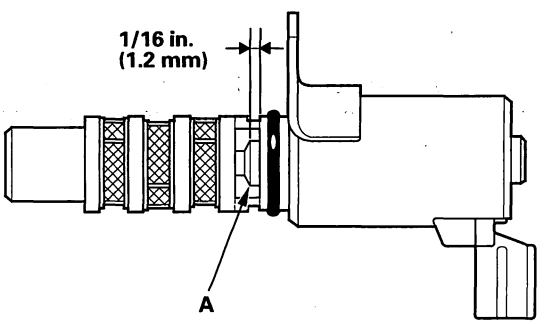


(cont'd)

Protected by AR



## VTC Oil Control Solenoid Valve Removal/Test/Installation (cont'd)

7. Coat a new O-ring (A) with engine oil, then install it.

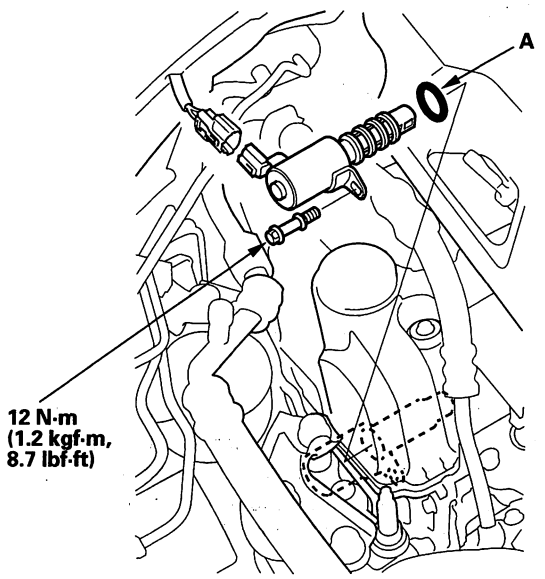


8. Clean and dry the mating surface of the valve.

9. Install the valve.

   NOTE: Do not install the valve while wearing cloth fibrous gloves. Be careful not to contaminate the cylinder head opening.

## CMP Sensor A Replacement

1. Remove the air cleaner (see page 11-394).

2. Remove the air bypass outlet pipe (see page 9-7).

3. Disconnect the CMP sensor A 3P connector (A).

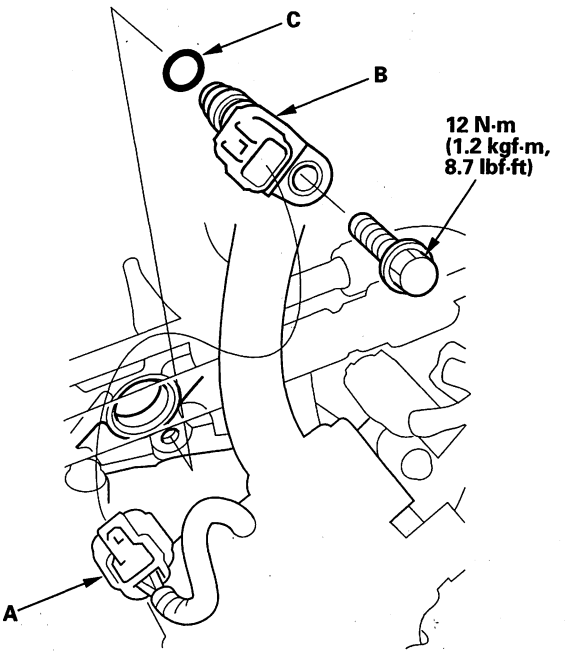


4. Remove CMP sensor A (B) from the intake camshaft side of the cylinder head.

5. Install the parts in the reverse order of removal with a new O-ring (C).



BACK

Protected by AR

## Rocker Arm Oil Control Valve Removal/Installation

1. Remove the charge air cooler cover (see step 1 on page 9-8).

2. Remove the turbocharger cover (see step 4 on page 11-440).

3. Disconnect the rocker arm oil control solenoid connector (A) and the rocker arm oil pressure switch connector (B).

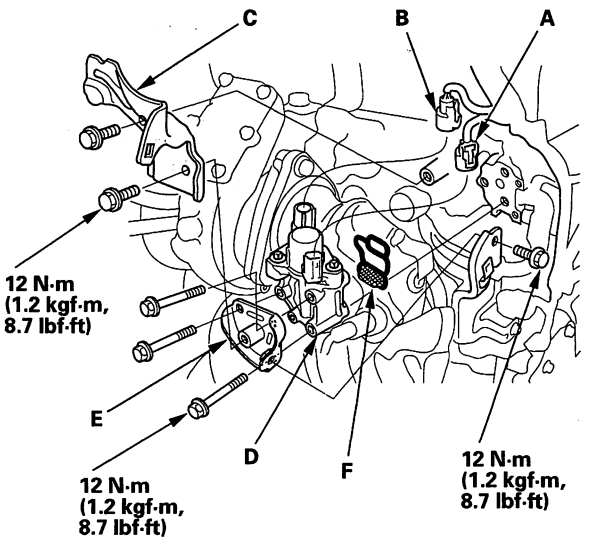


4. Remove the water hose upper cover (C).

5. Remove the rocker arm oil control valve (D) and cover (E).

6. Install the parts in the reverse order of removal with a new solenoid valve filter (F).

## Rocker Arm Oil Pressure Switch Removal/Installation

1. Remove the rocker arm oil control valve (see page 11-321).

2. Remove the rocker arm oil pressure switch (A).

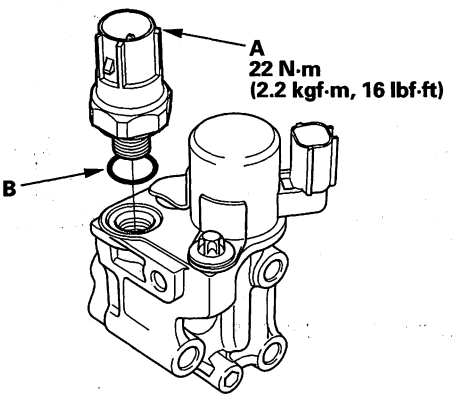


3. Install the parts in the reverse order of removal with a new O-ring (B).

Protected by AR

# Idle Control System

## Component Location Index

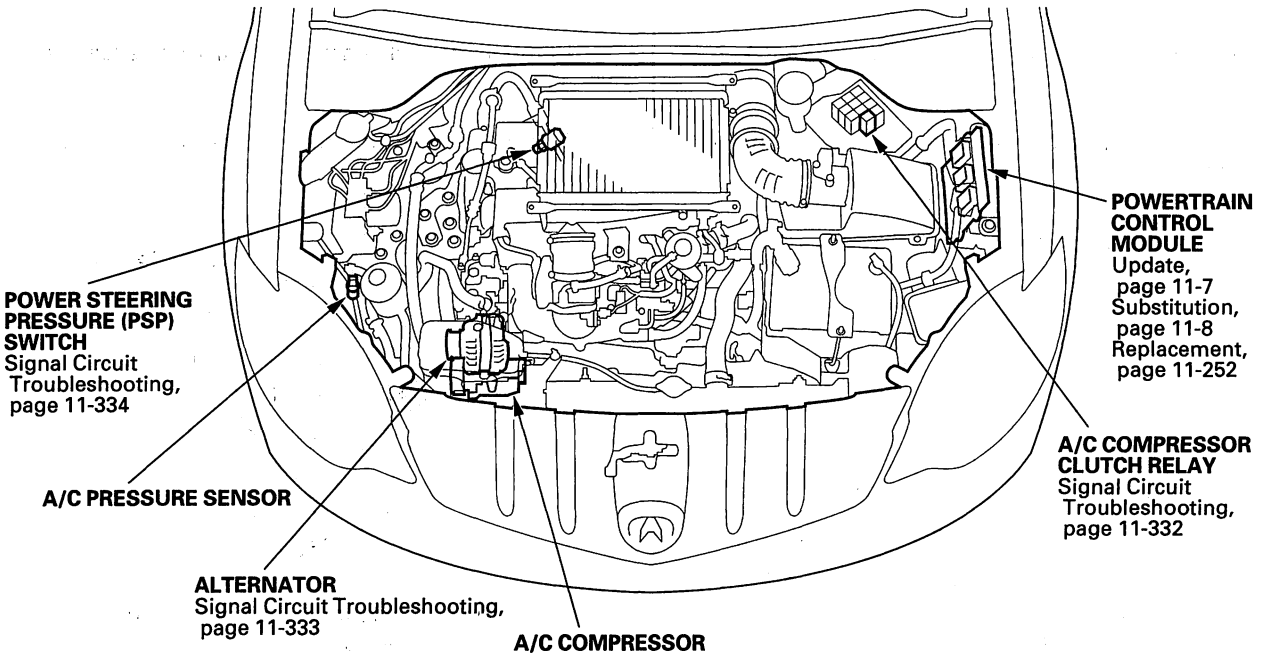


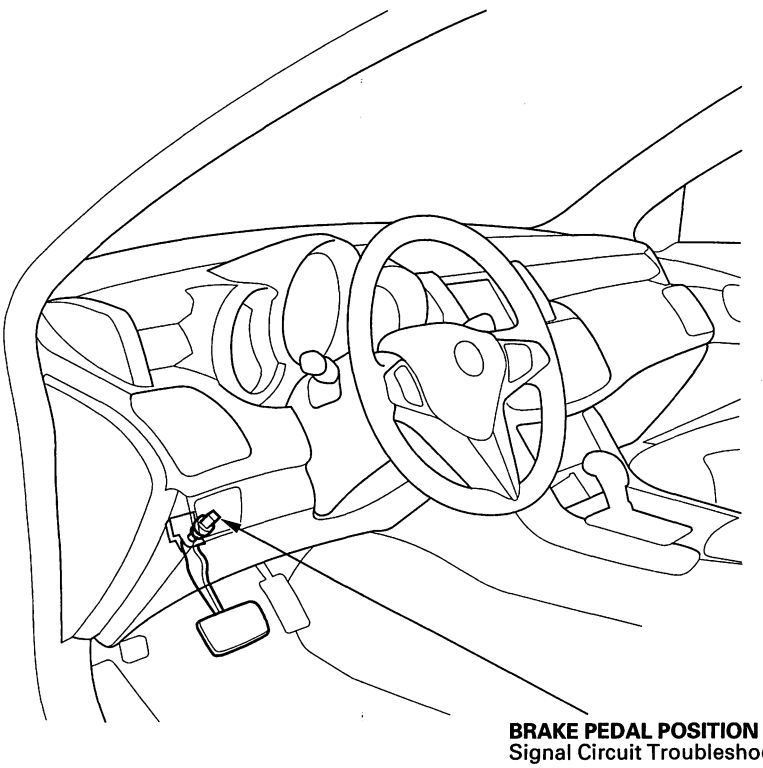




BACK

Protected by AR

## DTC Troubleshooting

### DTC P0506: Idle Control System RPM Lower Than Expected

NOTE: Before you troubleshoot, record all freeze data and any on-board snapshot, and review the general troubleshooting information (see page 11-3).

1. Turn the ignition switch ON (II).

2. Clear the DTC with the HDS.

3. Start the engine. Hold the engine speed at 3,000 rpm without load (in Park or neutral) until the radiator fan comes on, then let it idle.

4. Check under these DATA LIST parameter conditions with the HDS:

   - ECT SENSOR 1 above 156 °F (70 °C)
   - IAT SENSOR above 32 °F (0 °C)
   - VSS is 0 mph (0 km/h)
   - ST FUEL TRIM between 0.69—1.47
   - FSS is CLOSED

5. Monitor the OBD STATUS for DTC P0506 in the DTCs MENU with the HDS.

   *Does the screen indicate FAILED?*

   **YES**—Go to step 6.

   **NO**—If the screen indicates PASSED, go to step 15. If the screen indicates EXECUTING, keep idling until a result comes on. If the screen indicates OUT OF CONDITION, go to step 4 and recheck.

6. Remove the charge air cooler (see page 9-7) and intake air duct (charge air cooler outlet tube) (see page 9-11).

7. Check for dirt, carbon, or damage in the throttle bore.

   *Is there dirt, carbon, or damage in the throttle bore?*

   **YES**—If there is dirt or carbon, clean the throttle body (see page 11-394). Also check for damage to the air cleaner element (see page 11-395), then go to step 9. If there is damage in the throttle bore, go to step 8.

   **NO**—Check the A/C system or power steering system, then go to step 9.

8. Replace the throttle body (see page 11-396).

9. Reset the PCM with the HDS.

10. Do the PCM idle learn procedure (see page 11-339).

11. Start the engine. Hold the engine speed at 3,000 rpm without load (in Park or neutral) until the radiator fan comes on, then let it idle.

12. Check under these DATA LIST parameter conditions with the HDS:

    - ECT SENSOR 1 above 156 °F (70 °C)
    - IAT SENSOR above 32 °F (0 °C)
    - VSS is 0 mph (0 km/h)
    - ST FUEL TRIM between 0.69—1.47
    - FSS is CLOSED

13. Check for Temporary DTCs or DTCs with the HDS.

    *Is DTC P0506 indicated?*

    **YES**—Go to step 19.

    **NO**—Go to step 14.

(cont'd)

Protected by AR



## DTC Troubleshooting (cont'd)

14. Monitor the OBD STATUS for DTC P0506 in the DTCs MENU with the HDS.

    *Does the screen indicate PASSED?*

    **YES**—Troubleshooting is complete. If any other Temporary DTCs or DTCs were indicated in step 13, go to the indicated DTC's troubleshooting.■

    **NO**—If the screen indicates FAILED, go to step 19. If the screen indicates EXECUTING, keep idling until a result comes on. If the screen indicates OUT OF CONDITION, go to step 12.

15. Remove the charge air cooler (see page 9-7) and intake air duct (charge air cooler outlet tube) (see page 9-11).

16. Check for dirt, carbon, or damage in the throttle bore.

    *Is there dirt, carbon, or damage in the throttle bore?*

    **YES**—If there is dirt or carbon, clean the throttle body (see page 11-394). Also check for damage to the air cleaner element (see page 11-395), then go to step 9. If there is damage in the throttle bore, go to step 8.

    **NO**—Go to step 17.

17. Recheck with different load conditions (turn on the headlights, blower motor, rear window defogger and/or A/C, change the gear position, etc.).

18. Monitor the OBD STATUS for DTC P0506 in the DTCs MENU with the HDS.

    *Does the screen indicate PASSED?*

    **YES**—Intermittent failure, the system is OK at this time.■

    **NO**—If the screen indicates FAILED, check the A/C system and/or power steering system, then go to step 1 and recheck. If the screen indicates EXECUTING, keep idling until a result comes on. If the screen indicates OUT OF CONDITION, go to step 17.

19. Update the PCM if it does not have the latest software (see page 11-7), or substitute a known-good PCM (see page 11-8).

20. Start the engine. Hold the engine speed at 3,000 rpm without load (in Park or neutral) until the radiator fan comes on, then let it idle.

21. Check under these DATA LIST parameter conditions with the HDS:

    - ECT SENSOR 1 above 156 °F (70 °C)
    - IAT SENSOR above 32 °F (0 °C)
    - VSS is 0 mph (0 km/h)
    - ST FUEL TRIM between 0.69—1.47
    - FSS is CLOSED

22. Check for Temporary DTCs or DTCs with the HDS.

    *Is DTC P0506 indicated?*

    **YES**—Check for poor connections or loose terminals at the throttle body and the PCM. If the PCM was updated, substitute a known-good PCM (see page 11-8), then go to step 20. If the PCM was substituted, go to step 1.

    **NO**—Go to step 23.

23. Monitor the OBD STATUS for DTC P0506 in the DTCs MENU with the HDS.

    *Does the screen indicate PASSED?*

    **YES**—If the PCM was updated, troubleshooting is complete. If the PCM was substituted, replace the original PCM (see page 11-252). If any other Temporary DTCs or DTCs were indicated in step 22, go to the indicated DTC's troubleshooting.■

    **NO**—If the screen indicates FAILED, check for poor connections or loose terminals at the throttle body and the PCM. If the PCM was updated, substitute a known-good PCM (see page 11-8), then go to step 20. If the PCM was substituted, go to step 1. If the screen indicates EXECUTING, keep idling until a result comes on. If the screen indicates OUT OF CONDITION, go to step 20.



BACK

Protected by AR

## **DTC P0507:** Idle Control System RPM Higher Than Expected

NOTE: Before you troubleshoot, record all freeze data and any on-board snapshot, and review the general troubleshooting information (see page 11-3).

1. Turn the ignition switch ON (II).

2. Clear the DTC with the HDS.

3. Start the engine. Hold the engine speed at 3,000 rpm without load (in Park or neutral) until the radiator fan comes on, then let it idle for 20 seconds.

4. Monitor the OBD STATUS for DTC P0507 in the DTCs MENU with the HDS.

   *Does the screen indicate FAILED?*

   **YES**—Go to step 5.

   **NO**—If the screen indicates PASSED, intermittent failure, the system is OK at this time. If the screen indicates EXECUTING, keep idling until a result comes on. If the screen indicates OUT OF CONDITION, recheck with different load conditions (electrical, A/C, gear position, etc.), then go to step 3.

5. Check for vacuum or air leaks at these parts:

   - PCV valve
   - PCV hose
   - EVAP canister purge valve
   - Throttle body
   - Intake air duct (air flow tube)
   - Intake manifold
   - Turbocharger
   - Intake air duct (turbocharger inlet tube and pipe)
   - Intake air duct (turbocharger outlet pipe)
   - Charge air cooler
   - Intake air duct (charge air cooler inlet hose)
   - Intake air duct (charge air cooler outlet tube)
   - Turbocharger bypass control solenoid valve
   - Pressure regulator
   - Brake booster hose
   - Brake booster

   *Are there any leaks?*

   **YES**—Repair or replace the leaking part(s), then go to step 6.

   **NO**—Go to step 6.

6. Turn the ignition switch ON (II).

7. Reset the PCM with the HDS.

8. Do the PCM idle learn procedure (see page 11-339).

9. Start the engine. Hold the engine speed at 3,000 rpm without load (in Park or neutral) until the radiator fan comes on, then let it idle for 20 seconds.

10. Check for Temporary DTCs or DTCs with the HDS.

    *Is DTC P0507 indicated?*

    **YES**—Go to step 12.

    **NO**—Go to step 11.

(cont'd)

Protected by AR



## DTC Troubleshooting (cont'd)

11. Monitor the OBD STATUS for DTC P0507 in the DTCs MENU with the HDS.

    *Does the screen indicate PASSED?*

    **YES**—Troubleshooting is complete. If any other Temporary DTCs or DTCs were indicated in step 10, go to the indicated DTC's troubleshooting.■

    **NO**—If the screen indicates FAILED, go to step 12. If the screen indicates EXECUTING, keep idling until a result comes on. If the screen indicates OUT OF CONDITION, recheck with different load conditions (turn on the headlights, blower motor, or A/C; change the gear position, etc.), then go to step 9.

12. Update the PCM if it does not have the latest software (see page 11-7), or substitute a known-good PCM (see page 11-8).

13. Start the engine. Hold the engine speed at 3,000 rpm without load (in Park or neutral) until the radiator fan comes on, then let it idle for 20 seconds.

14. Check for Temporary DTCs or DTCs with the HDS.

    *Is DTC P0507 indicated?*

    **YES**—Check for poor connections or loose terminals at the throttle body and the PCM. If the PCM was updated, substitute a known-good PCM (see page 11-8), then go to step 13. If the PCM was substituted, go to step 1.

    **NO**—Go to step 15.

15. Monitor the OBD STATUS for DTC P0507 in the DTCs MENU with the HDS.

    *Does the screen indicate PASSED?*

    **YES**—If the PCM was updated, troubleshooting is complete. If the PCM was substituted, replace the original PCM (see page 11-252). If any other Temporary DTCs or DTCs were indicated in step 14, go to the indicated DTC's troubleshooting.■

    **NO**—If the screen indicates FAILED, check for poor connections or loose terminals at the throttle body and the PCM. If the PCM was updated, substitute a known-good PCM (see page 11-8), then go to step 13. If the PCM was substituted, go to step 1. If the screen indicates EXECUTING, keep idling until a result comes on. If the screen indicates OUT OF CONDITION, go to step 13.



BACK

Protected by AR

## DTC P0532: A/C Pressure Sensor Circuit Low Voltage

NOTE: Before you troubleshoot, record all freeze data and any on-board snapshot, and review the general troubleshooting information (see page 11-3).

1. Start the engine, and let it idle.
2. Turn the blower switch on.
3. Turn the A/C switch on.
4. Check the A/C PRESSURE SENSOR in the DATA LIST with the HDS.

   *Is there about 0.3 V or less?*

   **YES**—Go to step 5.

   **NO**—Intermittent failure, the system is OK at this time. Check for poor connections or loose terminals at the A/C pressure sensor and the PCM. ■
5. Turn the ignition switch OFF.
6. Disconnect the A/C pressure sensor 3P connector.
7. Turn the ignition switch ON (II).
8. Check the A/C PRESSURE SENSOR in the DATA LIST with the HDS.

   *Is there about 0.3 V or less?*

   **YES**—Go to step 10.

   **NO**—Go to step 9.
9. Measure voltage between A/C pressure sensor 3P connector terminals No. 1 and No. 3.

**A/C PRESSURE SENSOR 3P CONNECTOR**

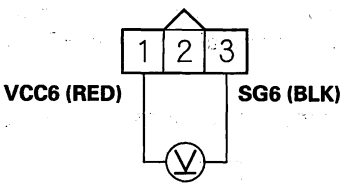


Wire side of female terminals

*Is there about 5 V?*

**YES**—Go to step 18.

**NO**—Go to step 14.

10. Turn the ignition switch OFF.
11. Jump the SCS line with the HDS.
12. Disconnect PCM connector A (44P).
13. Check for continuity between A/C pressure sensor 3P connector terminal No. 2 and body ground.

**A/C PRESSURE SENSOR 3P CONNECTOR**

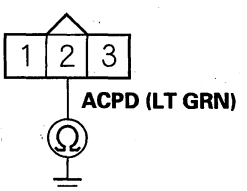


Wire side of female terminals

*Is there continuity?*

**YES**—Repair short in the wire between the PCM (A16) and the A/C pressure sensor, then go to step 20.

**NO**—Go to step 28.

(cont'd)

Protected by AR



## DTC Troubleshooting (cont'd)

14. Turn the ignition switch OFF.

15. Jump the SCS line with the HDS.

16. Disconnect PCM connector A (44P).

17. Check for continuity between A/C pressure sensor 3P connector terminal No. 1 and PCM connector terminal A19.

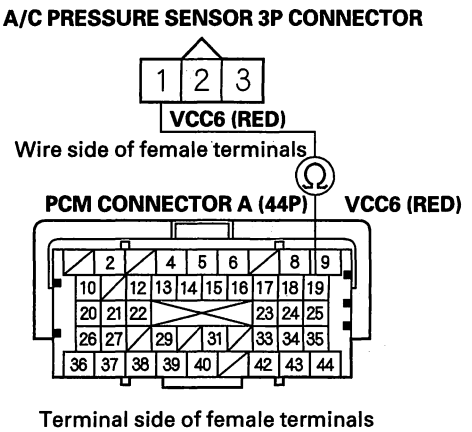


*Is there continuity?*

**YES**—Go to step 28.

**NO**—Repair open in the wire between the PCM (A19) and the A/C pressure sensor, then go to step 20.

18. Turn the ignition switch OFF.

19. Replace the A/C pressure sensor (see page 21-7).

20. Reconnect all connectors.

21. Turn the ignition switch ON (II).

22. Reset the PCM with the HDS.

23. Do the PCM idle learn procedure (see page 11-339).

24. Start the engine, and let it idle.

25. Turn the blower switch on.

26. Turn the A/C switch on.

27. Check for Temporary DTCs or DTCs with the HDS.

*Is DTC P0532 indicated?*

**YES**—Check for poor connections or loose terminals at the A/C pressure sensor and the PCM, then go to step 1.

**NO**—Troubleshooting is complete. If any other Temporary DTCs or DTCs are indicated, go to the indicated DTC's troubleshooting. ■

28. Reconnect all connectors.

29. Update the PCM if it does not have the latest software (see page 11-7), or substitute a known-good PCM (see page 11-8).

30. Start the engine, and let it idle.

31. Turn the blower switch on.

32. Turn the A/C switch on.

33. Check for Temporary DTCs or DTCs with the HDS.

*Is DTC P0532 indicated?*

**YES**—Check for poor connections or loose terminals at the A/C pressure sensor and the PCM. If the PCM was updated, substitute a known-good PCM (see page 11-8), then go to step 30. If the PCM was substituted, go to step 1.

**NO**—If the PCM was updated, troubleshooting is complete. If the PCM was substituted, replace the original PCM (see page 11-252). If any other Temporary DTCs or DTCs are indicated, go to the indicated DTC's troubleshooting. ■



BACK

Protected by AR

## **DTC P0533:** A/C Pressure Sensor Circuit High Voltage

NOTE: Before you troubleshoot, record all freeze data and any on-board snapshot, and review the general troubleshooting information (see page 11-3).

1. Start the engine, and let it idle.
2. Turn the blower switch on.
3. Turn the A/C switch on.
4. Check the A/C PRESSURE SENSOR in the DATA LIST with the HDS.

   *Is there about 4.75 V or more?*

   **YES**—Go to step 5.

   **NO**—Intermittent failure, the system is OK at this time. Check for poor connections or loose terminals at the A/C pressure sensor and the PCM.■
5. Turn the ignition switch OFF.
6. Disconnect the A/C pressure sensor 3P connector.
7. Connect A/C pressure sensor 3P connector terminals No. 2 and No. 3 with a jumper wire.

**A/C PRESSURE SENSOR 3P CONNECTOR**

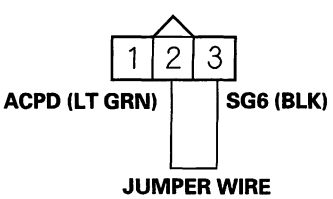


Wire side of female terminals

8. Turn the ignition switch ON (II).
9. Check the A/C PRESSURE SENSOR in the DATA LIST with the HDS.

   *Is there about 4.75 V or more?*

   **YES**—Go to step 10.

   **NO**—Go to step 22.
10. Turn the ignition switch OFF.
11. Remove the jumper wire from the A/C pressure sensor 3P connector.
12. Turn the ignition switch ON (II).
13. Measure voltage between A/C pressure sensor 3P connector terminal No. 1 and No. 3.

**A/C PRESSURE SENSOR 3P CONNECTOR**

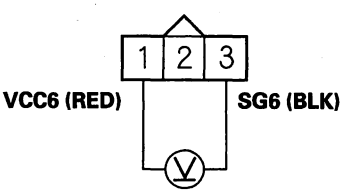


Wire side of female terminals

*Is there about 5 V?*

**YES**—Go to step 14.

**NO**—Go to step 18.

(cont'd)

Protected by AR



## DTC Troubleshooting (cont'd)

14. Turn the ignition switch OFF.

15. Jump the SCS line with the HDS.

16. Disconnect PCM connector A (44P).

17. Check for continuity between A/C pressure sensor 3P connector terminal No. 2 and PCM connector terminal A16.

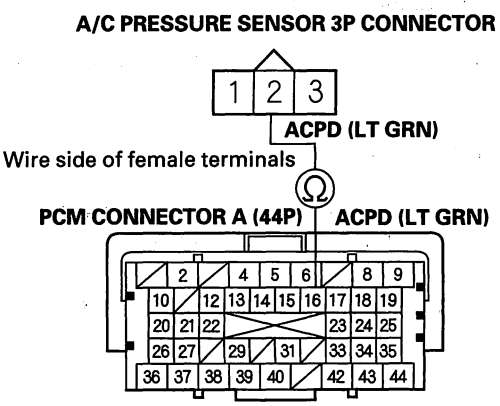


*Is there continuity?*

**YES**—Go to step 32.

**NO**—Repair open in the wire between the PCM (A16) and the A/C pressure sensor, then go to step 24.

18. Turn the ignition switch OFF.

19. Jump the SCS line with the HDS.

20. Disconnect PCM connector A (44P).

21. Check for continuity between A/C pressure sensor 3P connector terminal No. 3 and PCM connector terminal A9.

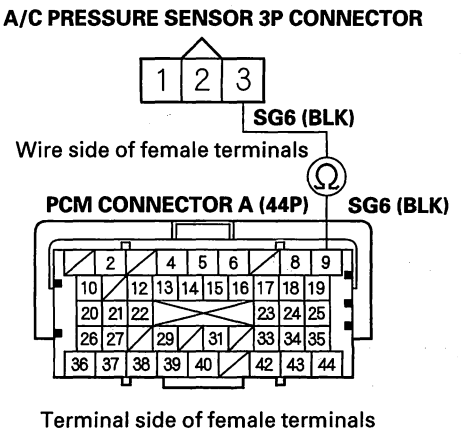


*Is there continuity?*

**YES**—Go to step 32.

**NO**—Repair open in the wire between the PCM (A9) and the A/C pressure sensor, then go to step 24.



BACK

Protected by AR

22. Turn the ignition switch OFF.

23. Replace the A/C pressure sensor (see page 21-7).

24. Reconnect all connectors.

25. Turn the ignition switch ON (II).

26. Reset the PCM with the HDS.

27. Do the PCM idle learn procedure (see page 11-339).

28. Start the engine, and let it idle.

29. Turn the blower switch on.

30. Turn the A/C switch on.

31. Check for Temporary DTCs or DTCs with the HDS.

    *Is DTC P0533 indicated?*

    **YES**—Check for poor connections or loose terminals at the A/C pressure sensor and the PCM, then go to step 1.

    **NO**—Troubleshooting is complete. If any other Temporary DTCs or DTCs are indicated, go to the indicated DTC's troubleshooting. ■

32. Reconnect all connectors.

33. Update the PCM if it does not have the latest software (see page 11-7), or substitute a known-good PCM (see page 11-8).

34. Start the engine, and let it idle.

35. Turn the blower switch on.

36. Turn the A/C switch on.

37. Check for Temporary DTCs or DTCs with the HDS.

    *Is DTC P0533 indicated?*

    **YES**—Check for poor connections or loose terminals at the A/C pressure sensor and the PCM. If the PCM was updated, substitute a known-good PCM (see page 11-8), then go to step 34. If the PCM was substituted, go to step 1.

    **NO**—If the PCM was updated, troubleshooting is complete. If the PCM was substituted, replace the original PCM (see page 11-252). If any other Temporary DTCs or DTCs are indicated, go to the indicated DTC's troubleshooting. ■

Protected by AR



## A/C Signal Circuit Troubleshooting

1. Start the engine, and let it idle.
2. Turn the blower switch on.
3. Turn the A/C switch on.
4. Check the A/C CLUTCH in the DATA LIST with the HDS.

   *Does it indicate ON?*

   **YES**—Go to step 5.

   **NO**—Do the A/C system test (see page 21-109).■

5. Check the A/C system.

   *Does the A/C system operate?*

   **YES**—The air conditioning system circuit is OK.■

   **NO**—Go to step 6.

6. Turn the ignition switch OFF.
7. Turn the ignition switch ON (II).
8. Activate the A/C CLUTCH in the INSPECTION MENU with the HDS.

   *Is there a clicking noise from the A/C compressor clutch?*

   **YES**—Do the A/C system test (see page 21-109).■

   **NO**—Go to step 9.

9. Turn the ignition switch OFF.
10. Jump the SCS line with the HDS.
11. Disconnect PCM connector A (44P).
12. Turn the ignition switch ON (II).
13. Momentarily connect PCM connector terminal A14 to body ground with a jumper wire several times.

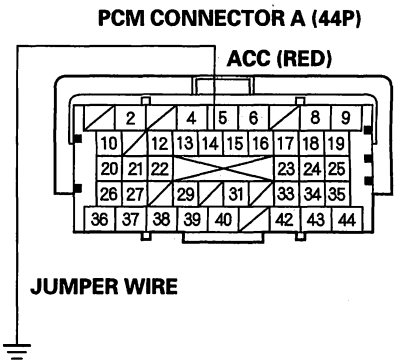


Terminal side of female terminals

*Is there a clicking noise from the A/C compressor clutch?*

**YES**—Update the PCM if it does not have the latest software (see page 11-7), or substitute a known-good PCM (see page 11-8), then recheck. If the symptom/indication goes away with a known-good PCM, replace the original PCM (see page 11-252).■

**NO**—Check for poor connections or loose terminals at the A/C compressor clutch relay and the PCM. If the connections are OK, check the A/C compressor clutch relay (see page 22-64), then repair open in the wire between the PCM (A14) and the A/C compressor clutch relay and the other A/C systems.■



BACK

Protected by AR

## Alternator FR Signal Circuit Troubleshooting

1. Start the engine, and let it idle.
2. Monitor the ALTERNATOR in the DATA LIST with the HDS.
3. Check if the indicated percentage varies when the headlight switch is turned on.

   *Does the percentage vary?*

   **YES**—The alternator signal circuit is OK.■

   **NO**—Go to step 4.
4. Turn the headlight switch and ignition switch OFF.
5. Jump the SCS line with the HDS.
6. Disconnect the alternator 4P connector.
7. Disconnect PCM connector B (44P).
8. Check for continuity between body ground and PCM connector terminal B43.

**PCM CONNECTOR B (44P)**

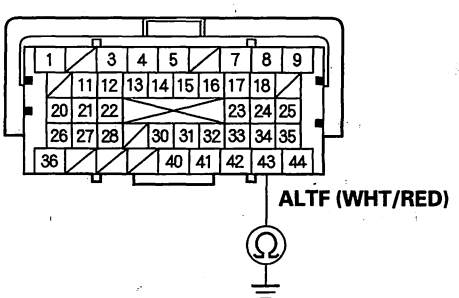


Terminal side of female terminals

*Is there continuity?*

**YES**—Repair short in the wire between the PCM (B43) and the alternator.■

**NO**—Update the PCM if it does not have the latest software (see page 11-7), or substitute a known-good PCM (see page 11-8), then recheck. If the symptom/indication goes away with a known-good PCM, replace the original PCM (see page 11-252).■

BACK

Protected by AR



## PSP Switch Signal Circuit Troubleshooting

1. Start the engine, and let it idle.
2. Align the steering wheel straight ahead.
3. Check the PSP SWITCH in the DATA LIST with the HDS.

   *Does it indicate ON?*

   **YES**—Go to step 4.

   **NO**—Go to step 14.
4. Turn the steering wheel to the full lock position.
5. Check the PSP SWITCH in the DATA LIST with the HDS.

   *Does it change to OFF?*

   **YES**—The PSP switch signal circuit is OK.■

   **NO**—Go to step 6.
6. Turn the ignition switch OFF.
7. Disconnect the PSP switch 2P connector.
8. Start the engine.
9. Check the PSP SWITCH in the DATA LIST with the HDS.

   *Does it change to OFF?*

   **YES**—Replace the PSP switch (see page 17-13).■

   **NO**—Go to step 10.
10. Turn the ignition switch OFF.
11. Jump the SCS line with the HDS.
12. Disconnect PCM connector A (44P).
13. Check for continuity between PSP switch 2P connector terminal No. 1 and body ground.

**PSP SWITCH 2P CONNECTOR**

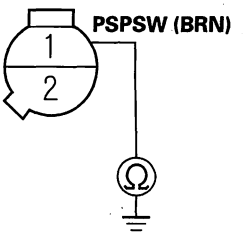


Wire side of female terminals

*Is there continuity?*

**YES**—Repair short in the wire between the PCM (A22) and the PSP switch.■

**NO**—Update the PCM if it does not have the latest software (see page 11-7), or substitute a known-good PCM (see page 11-8), then recheck. If the symptom/indication goes away with a known-good PCM, replace the original PCM (see page 11-252).■

14. Turn the ignition switch OFF.
15. Disconnect the PSP switch 2P connector.
16. Connect PSP switch 2P connector terminals No. 1 and No. 2 with a jumper wire, then start the engine.

**PSP SWITCH 2P CONNECTOR**

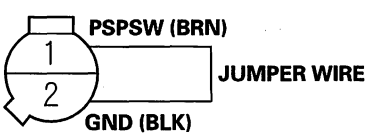


Wire side of female terminals



BACK

Protected by AR

17. Check the PSP SWITCH in the DATA LIST with the HDS.

    *Does it change to ON?*

    **YES**—Replace the PSP switch (see page 17-13).■

    ***NO***—*Go to step 18.*

18. Turn the ignition switch OFF.

19. Remove the jumper wire from the PSP switch 2P connector.

20. Jump the SCS line with the HDS.

21. Disconnect PCM connector A (44P).

22. Connect PSP switch 2P connector terminal No. 1 to body ground with a jumper wire.

**PSP SWITCH 2P CONNECTOR**

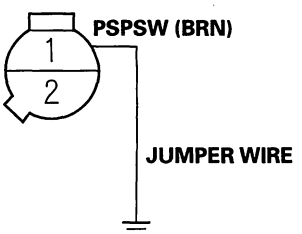


Wire side of female terminals

23. Check for continuity between body ground and PCM connector terminal A22.

**PCM CONNECTOR A (44P)**

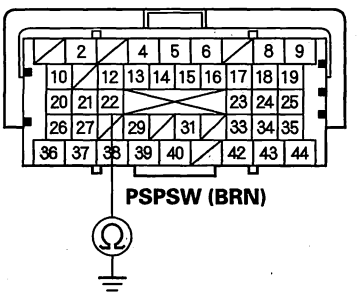


Terminal side of female terminals

*Is there continuity?*

**YES**—Go to step 24.

**NO**—Repair open in the wire between the PSP switch and the PCM (A22).■

24. Check for continuity between PSP switch 2P connector terminal No. 2 and body ground.

**PSP SWITCH 2P CONNECTOR**

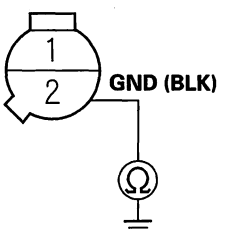


Wire side of female terminals

*Is there continuity?*

**YES**—Update the PCM if it does not have the latest software (see page 11-7), or substitute a known-good PCM (see page 11-8), then recheck. If the symptom/indication goes away with a known-good PCM, replace the original PCM (see page 11-252).■

**NO**—Repair open in the wire between the PSP switch and G401 (see page 22-26).■

Protected by AR



## Brake Pedal Position Switch Signal Circuit Troubleshooting

1. Turn the ignition switch ON (II).

2. Check the BRAKE SWITCH in the DATA LIST with the HDS.

   *Does it indicate OFF?*

   **YES**—Go to step 3.

   **NO**—Inspect the brake pedal position switch (see page 19-6).■

3. Press the brake pedal, and check the BRAKE SWITCH in the DATA LIST with the HDS.

   *Does it change to ON?*

   **YES**—The brake pedal position switch signal circuit (BKSW line) is OK.■

   **NO**—Go to step 4.

4. Turn the ignition switch OFF.

5. Jump the SCS line with the HDS.

6. Disconnect the brake pedal position switch 4P connector.

7. Disconnect PCM connector A (44P).

8. Check for continuity between PCM connector terminal A40 and body ground.

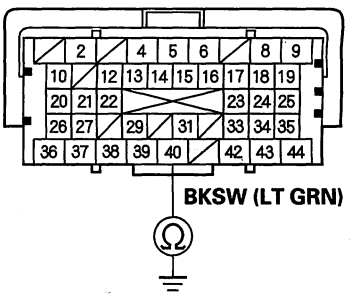


Terminal side of female terminals

*Is there continuity?*

**YES**—Repair short in the wire between the PCM (A40) and the No. 12 HORN, STOP (15 A) fuse. Replace the No. 12 HORN, STOP (15 A) fuse.■

**NO**—Go to step 9.



BACK

Protected by AR

9. Connect brake pedal position switch 4P connector terminal No. 2 to body ground with a jumper wire.

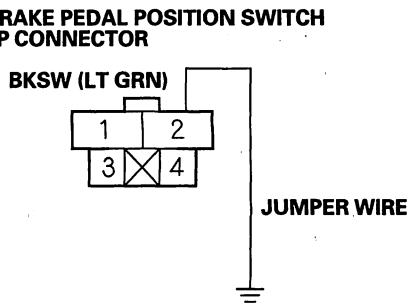


Wire side of female terminals

10. Check for continuity between PCM connector terminal A40 and body ground.

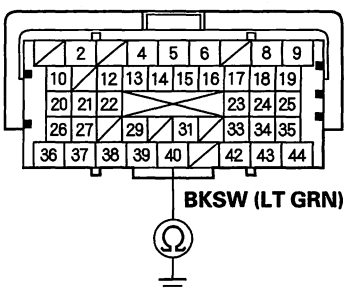


Terminal side of female terminals

*Is there continuity?*

**YES**—Repair open in the wire between the brake pedal position switch and the No. 12 HORN, STOP (15 A) fuse. Inspect the brake pedal position switch (see page 19-6). ■

**NO**—Repair open in the wire between the PCM (A40) and the brake pedal position switch. ■

Protected by AR



## Idle Speed Inspection

NOTE:
- Before checking the idle speed, check these items:
  - The malfunction indicator lamp (MIL) has not been reported on, and there are no DTCs.
  - Ignition timing
  - Spark plugs
  - Air cleaner
  - PCV system
- Apply the parking brake.
- Make sure the daytime running lights are off.

1. Disconnect the evaporative emission (EVAP) canister purge valve connector.

2. Connect the HDS to the data link connector (DLC) (A) located under the driver's side of the dashboard.

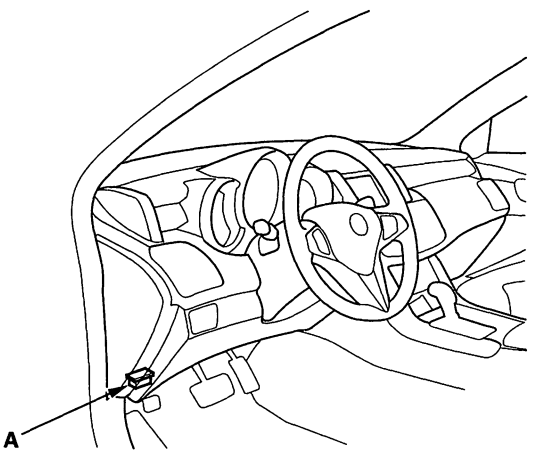


3. Make sure the HDS communicates with the PCM. If it doesn't, go to the DLC circuit troubleshooting (see page 11-229).

4. Start the engine. Hold the engine speed at 3,000 rpm without load (in Park or neutral) until the radiator fan comes on, then let it idle.

5. Check the idle speed without load conditions: headlights, blower fan, radiator fan, and air conditioner off.

   **Idle speed should be: 720±50 rpm**

6. Let the engine idle for 1 minute with high electric load (A/C switch on, temperature set to max cool, blower fan on High, and headlights on high beam).

   **Idle speed should be: 720±50 rpm**

   NOTE: If the idle speed is not within specification, do the PCM idle learn procedure (see page 11-339). If the idle speed is still not within specification, go to symptom troubleshooting.

7. Reconnect the EVAP canister purge valve connector.



BACK

Protected by AR

## PCM Idle Learn Procedure

The idle learn procedure must be done so the PCM can learn the engine idle characteristics.

Do the idle learn procedure whenever you do any of these actions:

- Replace PCM.
- Reset PCM.
- Update PCM.
- Replace or clean the throttle body.

NOTE: Erasing DTCs with the HDS does not require you to do the idle learn procedure.

### Procedure

1. Make sure all electrical items (A/C, audio, lights, etc.) are off.

2. Reset the PCM with the HDS.

3. Turn the ignition switch ON (II), and wait 2 seconds.

4. Start the engine. Hold the engine speed at 3,000 rpm without load (in Park or neutral) until the radiator fan comes on, or until the engine coolant temperature reaches 194 °F (90 °C).

5. Let the engine idle for about 5 minutes with the throttle fully closed.

   NOTE: If the radiator fan comes on, do not include its running time in the 5 minutes.

Protected by AR

# Fuel Supply System

## Component Location Index

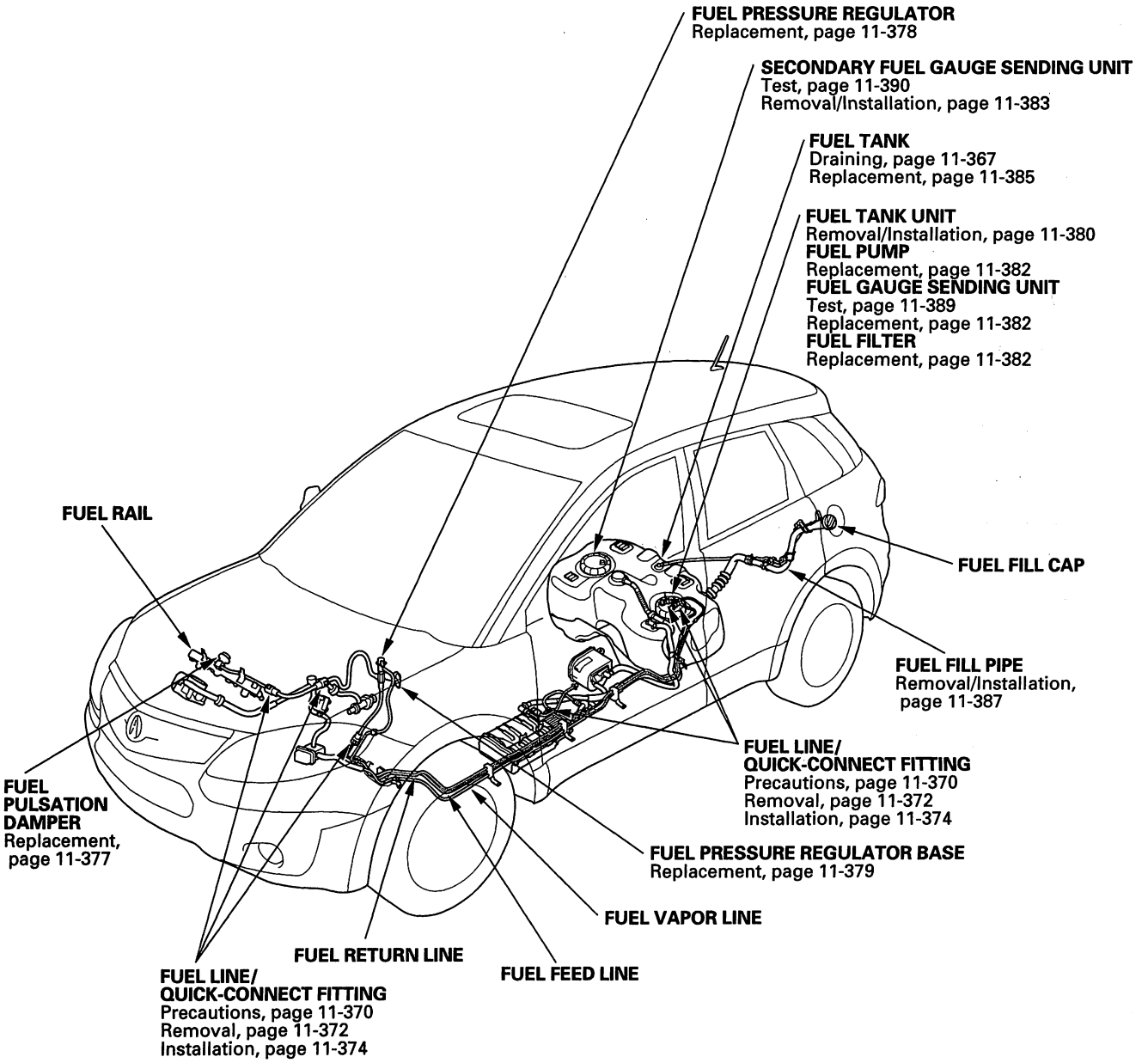




BACK

Protected by AR

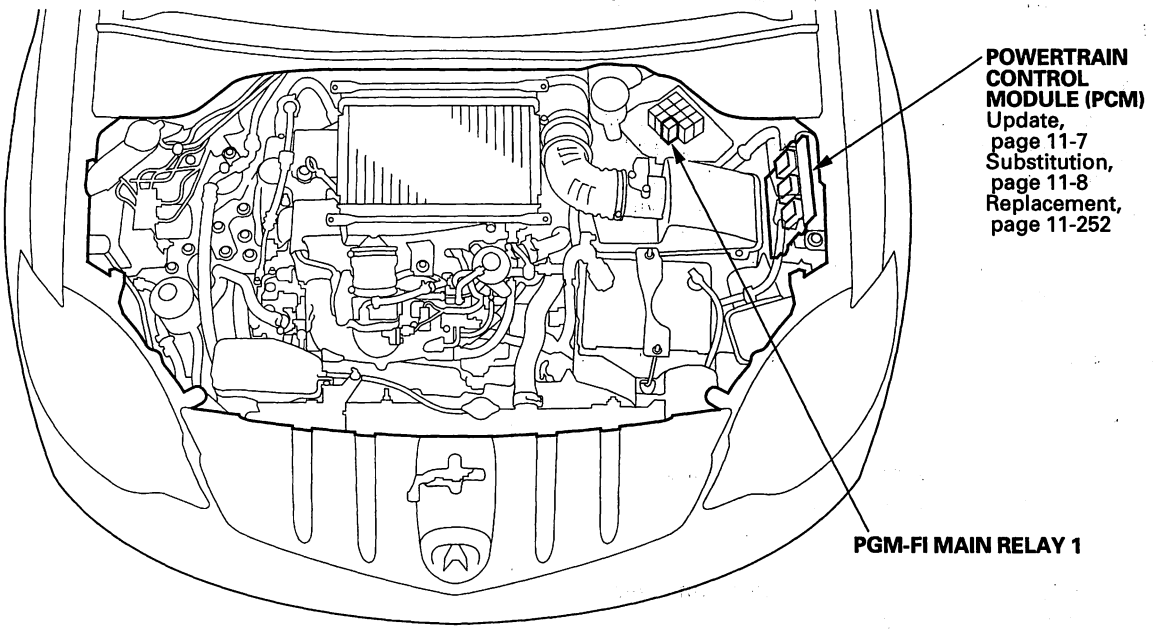


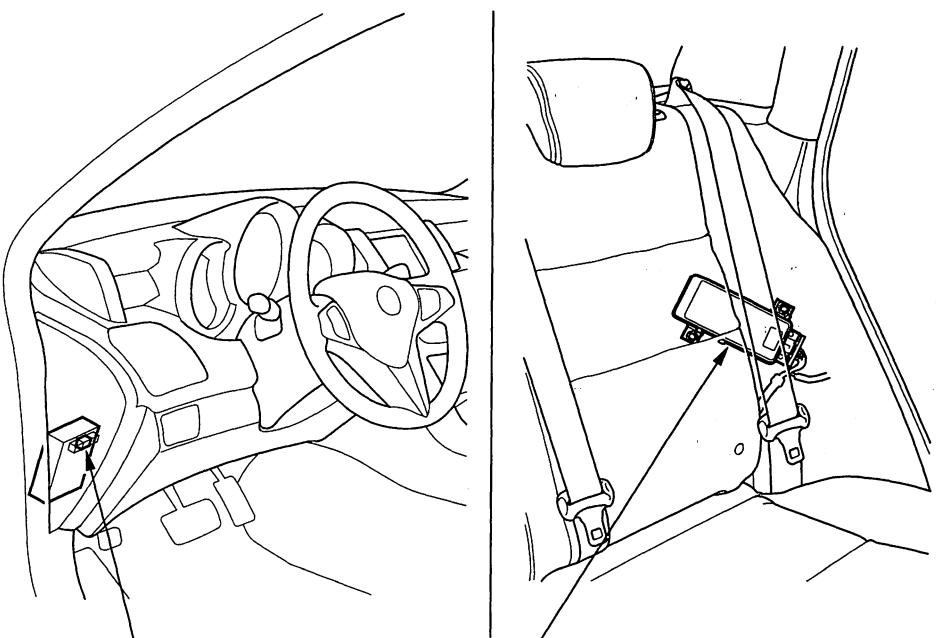

Protected by AR



## DTC Troubleshooting

### DTC P0461: Fuel Level Sensor (Fuel Gauge Sending Unit) Circuit Range/Performance Problem

NOTE:
- Before you troubleshoot, record all freeze data and any on-board snapshot, and review the general troubleshooting information (see page 11-3).
- Because it requires 162 miles (260 km) of driving without refueling to complete this diagnosis, DTC P0461 cannot be duplicated during this troubleshooting.

1. Test the fuel gauge sending unit (see page 11-389).

   *Is the fuel gauge sending unit OK?*

   **YES**—Check for poor connections or loose terminals at the fuel gauge sending unit and the gauge control module.■

   **NO**—Replace the fuel gauge sending unit (see page 11-382), then go to step 2.

2. Turn the ignition switch ON (II).

3. Reset the PCM with the HDS.

4. Do the PCM idle learn procedure (see page 11-339).

5. Check for Temporary DTCs or DTCs with the HDS.

   *Is DTC P0461 indicated?*

   **YES**—Check for poor connections or loose terminals at the fuel gauge sending unit and the gauge control module, then go to step 1.

   **NO**—Troubleshooting is complete. If any other Temporary DTCs or DTCs are indicated, go to the indicated DTC's troubleshooting.■



BACK

Protected by AR

## **DTC P0462:** Fuel Level Sensor (Fuel Gauge Sending Unit) Circuit Low Voltage

NOTE: Before you troubleshoot, record all freeze data and any on-board snapshot, and review the general troubleshooting information (see page 11-3).

1. Turn the ignition switch ON (II).
2. Clear the DTC with the HDS, and wait 5 seconds.
3. Check for Temporary DTCs or DTCs with the HDS.

   *Is DTC P0462 indicated?*

   **YES**—Go to step 4.

   **NO**—Intermittent failure, the system is OK at this time. Check for poor connections or loose terminals at the gauge control module, the fuel gauge sending unit, and the secondary fuel gauge sending unit. ■
4. Turn the ignition switch OFF.
5. Fold the rear seat down, then remove the right rear side garnish (see page 20-76).
6. Pull back the carpet to expose the access panel (see step 9 on page 20-91), then remove the access panel from the right side of the floor (see page 11-383).
7. Disconnect the secondary fuel gauge sending unit 4P connector.
8. Turn the ignition switch ON (II).
9. Clear the DTC with the HDS, and wait 5 seconds.
10. Check for Temporary DTCs or DTCs with the HDS.

    *Is DTC P0463 indicated?*

    **YES**—Check the secondary fuel gauge sending unit (see page 11-383), then go to step 31.

    **NO**—Go to step 11.
11. Turn the ignition switch OFF.
12. Remove the left cargo area side trim panel (see page 20-76), then remove the access panel from the left side of the floor (see page 11-380).
13. Disconnect the fuel tank unit 4P connector.
14. Turn the ignition switch ON (II).
15. Clear the DTC with the HDS, and wait 5 seconds.
16. Check for Temporary DTCs or DTCs with the HDS.

    *Is DTC P0463 indicated?*

    **YES**—Go to step 21.

    **NO**—Go to step 17.
17. Turn the ignition switch OFF.
18. Remove the gauge control module (see page 22-284).
19. Disconnect the gauge control module 36P connector.

(cont'd)

Protected by AR



## DTC Troubleshooting (cont'd)

20. Check for continuity between fuel tank unit 4P connector terminal No. 1 and body ground.

**FUEL TANK UNIT 4P CONNECTOR**

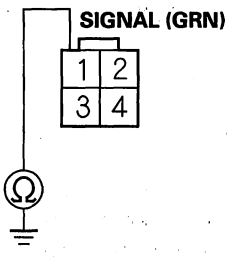


Wire side of female terminals

*Is there continuity?*

**YES**—Repair short in the wire between the gauge control module (signal line) and the fuel gauge sending unit, then go to step 31.

**NO**—Go to step 23.

21. Turn the ignition switch OFF.

22. Check for continuity between fuel tank unit 4P connector terminal No. 3 and body ground.

**FUEL TANK UNIT 4P CONNECTOR**

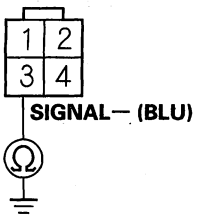


Wire side of female terminals

*Is there continuity?*

**YES**—Repair short in the wire between the fuel gauge sending unit and secondary fuel gauge sending unit, then go to step 31.

**NO**—Check the fuel gauge sending unit (see page 11-389).

23. Reconnect the gauge control module 36P connector.

24. Remove the fuel tank unit (see page 11-380) and the secondary fuel gauge sending unit (see page 11-383)

25. Connect the fuel tank unit and secondary fuel gauge sending unit 4P connectors.

26. Turn the ignition switch ON (II).

27. Clear the DTC with the HDS.



BACK

Protected by AR

28. Set the floats (A) to the E position.

**Fuel tank unit**

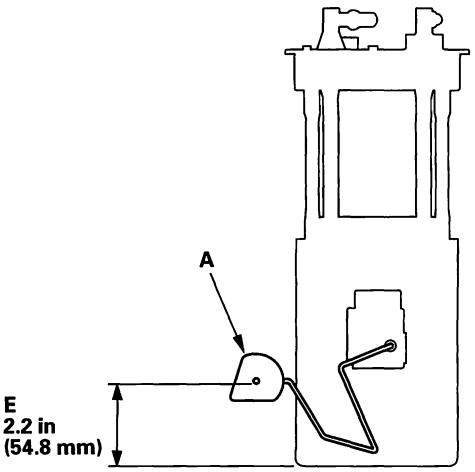


**Secondary fuel gauge sending unit**

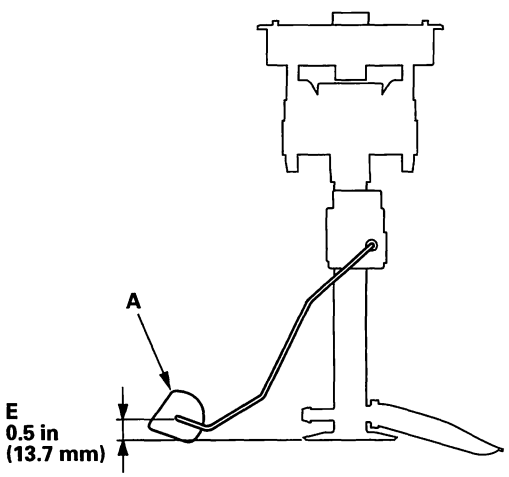


29. Check the fuel gauge.

    *Does the gauge move to the empty position?*

    **YES**—Go to step 37.

    **NO**—Replace the gauge control module (see page 22-284), then go to step 30.

30. Turn the ignition switch OFF.

31. Install the parts in the reverse order of removal.

32. Reconnect all connectors.

33. Turn the ignition switch ON (II).

34. Reset the PCM with the HDS.

35. Do the PCM idle learn procedure (see page 11-339).

36. Check for Temporary DTCs or DTCs with the HDS.

    *Is DTC P0462 indicated?*

    **YES**—Check for poor connections or loose terminals at the gauge control module, the fuel gauge sending unit, and the secondary fuel gauge sending unit, then go to step 1.

    **NO**—Troubleshooting is complete. If any other Temporary DTCs or DTCs are indicated, go to the indicated DTC's troubleshooting.■

(cont'd)

Protected by AR



## DTC Troubleshooting (cont'd)

37. Reconnect all connectors.

38. Update the PCM if it does not have the latest software (see page 11-7), or substitute a known-good PCM (see page 11-8).

39. Check for Temporary DTCs or DTCs with the HDS.

    *Is DTC P0462 indicated?*

    **YES**—Check for poor connections or loose terminals at the gauge control module, the fuel gauge sending unit, and the secondary fuel gauge sending unit. If the PCM was updated, substitute a known-good PCM (see page 11-8), then recheck. If the PCM was substituted, go to step 1.

    **NO**—If the PCM was updated, troubleshooting is complete. If the PCM was substituted, replace the original PCM (see page 11-252). If any other Temporary DTCs or DTCs are indicated, go to the indicated DTC's troubleshooting.■



BACK

Protected by AR

## DTC P0463: Fuel Level Sensor (Fuel Gauge Sending Unit) Circuit High Voltage

NOTE: Before you troubleshoot, record all freeze data and any on-board snapshot, and review the general troubleshooting information (see page 11-3).

1. Turn the ignition switch ON (II).
2. Clear the DTC with the HDS, and wait 5 seconds.
3. Check for Temporary DTCs or DTCs with the HDS.

   *Is DTC P0463 indicated?*

   **YES**—Go to step 4.

   **NO**—Intermittent failure, the system is OK at this time. Check for poor connections or loose terminals at the gauge control module, the fuel gauge sending unit, and the secondary fuel gauge sending unit.■

4. Turn the ignition switch OFF.
5. Fold the rear seat down, then remove the left cargo area side trim panel (see page 20-76).
6. Pull back the carpet to expose the access panel (see step 9 on page 20-91), then remove the access panel from the left side of the floor (see page 11-380).
7. Disconnect the fuel tank unit 4P connector.
8. Remove the access panel from the right side of the floor (see page 11-383).
9. Disconnect the secondary fuel gauge sending unit 4P connector.
10. Check for continuity between fuel tank unit 4P connector terminal No. 3 and the secondary fuel gauge sending unit 4P connector terminal No. 1.

**FUEL TANK UNIT 4P CONNECTOR**

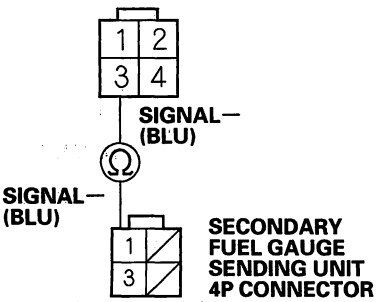


Wire side of female terminals

*Is there continuity?*

**YES**—Go to step 11.

**NO**—Repair open in the wire between the fuel gauge sending unit and the secondary fuel gauge sending unit, then go to step 27.

11. Remove the gauge control module (see page 22-284).
12. Disconnect the gauge control module 36P connector.

(cont'd)

Protected by AR



## DTC Troubleshooting (cont'd)

13. Connect secondary fuel gauge sending unit 4P connector terminal No. 3 to body ground with a jumper wire.

**SECONDARY FUEL GAUGE SENDING UNIT 4P CONNECTOR**

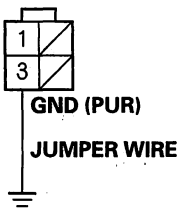


Wire side of female terminals

14. Check for continuity between gauge control module 36P connector terminal No. 20 and body ground.

**GAUGE CONTROL MODULE 36P CONNECTOR**

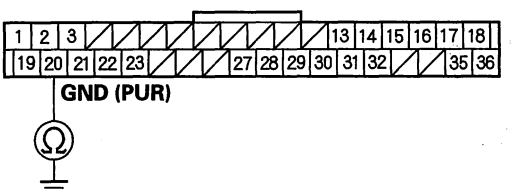


Wire side of female terminals

*Is there continuity?*

**YES**—Go to step 15.

**NO**—Repair open in the wire between the gauge control module and the secondary fuel gauge sending unit, then go to step 27.

15. Connect fuel tank unit 4P connector terminal No. 1 to body ground with a jumper wire.

**FUEL TANK UNIT 4P CONNECTOR**

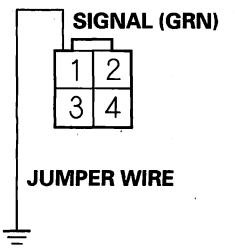


Wire side of female terminals

16. Check for continuity between gauge control module 36P connector terminal No. 27 and body ground.

**GAUGE CONTROL MODULE 36P CONNECTOR**

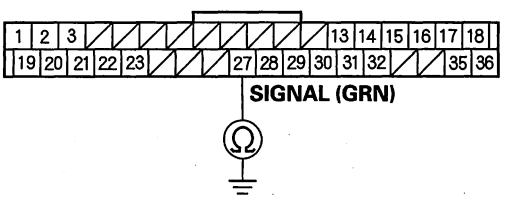


Wire side of female terminals

*Is there continuity?*

**YES**—Go to step 17.

**NO**—Repair open in the wire between the gauge control module and the fuel gauge sending unit, then go to step 27.



BACK

Protected by AR

17. Disconnect the jumper wire from the fuel gauge sending unit 4P connector.

18. Remove the fuel tank unit (see page 11-380).

19. Test the fuel gauge sending unit (see page 11-389).

    *Is the fuel gauge sending unit OK?*

    **YES**—Go to step 20.

    **NO**—Replace the fuel gauge sending unit (see page 11-382), then go to step 27.

20. Remove the secondary fuel gauge sending unit (see page 11-383).

21. Test the secondary fuel gauge sending unit (see page 11-390).

    *Is the secondary fuel gauge sending unit OK?*

    **YES**—Go to step 22.

    **NO**—Replace the secondary fuel gauge sending unit (see page 11-383), then go to step 27.

22. Reconnect the fuel tank unit 4P connector, the secondary fuel gauge sending unit 4P connector, and the gauge control module 36P connector.

23. Turn the ignition switch ON (II).

24. Set the floats (A) to the F position.

**Fuel sending unit**

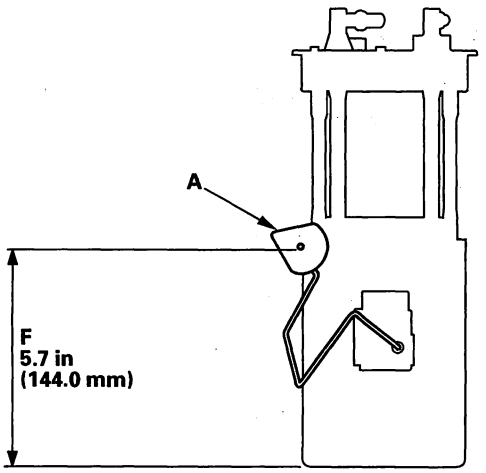


**Secondary fuel sending unit**

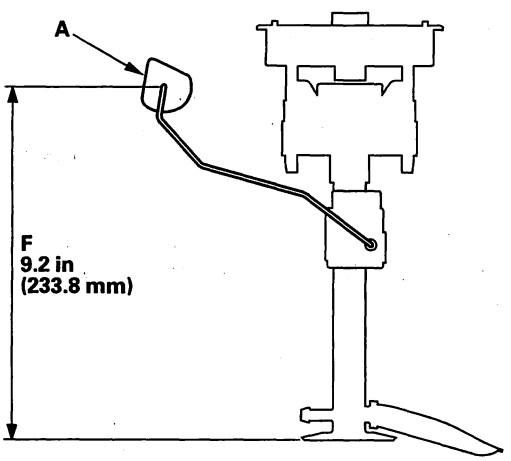


(cont'd)

Protected by AR



## DTC Troubleshooting (cont'd)

25. Check the fuel gauge.

    *Does the gauge move to the full position?*

    **YES**—Go to step 33.

    **NO**—Replace the gauge control module (see page 22-284), then go to step 26.

26. Turn the ignition switch OFF.

27. Install the parts in the reverse order of removal.

28. Reconnect all connectors.

29. Turn the ignition switch ON (II).

30. Reset the PCM with the HDS.

31. Do the PCM idle learn procedure (see page 11-339).

32. Check for Temporary DTCs or DTCs with the HDS.

    *Is DTC P0463 indicated?*

    **YES**—Check for poor connections or loose terminals at the gauge control module, the fuel gauge sending unit, and the secondary fuel gauge sending unit, then go to step 1.

    **NO**—Troubleshooting is complete. If any other Temporary DTCs or DTCs are indicated, go to the indicated DTC's troubleshooting.■

33. Reconnect all connectors.

34. Update the PCM if it does not have the latest software (see page 11-7), or substitute a known-good PCM (see page 11-8).

35. Check for Temporary DTCs or DTCs with the HDS.

    *Is DTC P0463 indicated?*

    **YES**—Check for poor connections or loose terminals at the gauge control module, the fuel gauge sending unit, and the secondary fuel gauge sending unit. If the PCM was updated, substitute a known-good PCM (see page 11-8), then recheck. If the PCM was substituted, go to step 1.

    **NO**—If the PCM was updated, troubleshooting is complete. If the PCM was substituted, replace the original PCM (see page 11-252). If any other Temporary DTCs or DTCs are indicated, go to the indicated DTC's troubleshooting.■



BACK

Protected by AR

## **DTC P0627:** Fuel Pump Control Module System Malfunction

NOTE: Before you troubleshoot, record all freeze data and any on-board snapshot, and review the general troubleshooting information (see page 11-3).

1. Turn the ignition switch ON (II).
2. Clear the DTC with the HDS.
3. Turn the ignition switch to the start (III) position.

   NOTE:
   - If the engine starts, release the ignition switch.
   - If the engine does not start, do not keep cranking for more than 10 seconds.

4. Check for Temporary DTCs or DTCs with the HDS.

   *Is DTC P0627 indicated?*

   **YES**—Go to step 5.

   **NO**—Intermittent failure, the system is OK at this time. Check for poor connections or loose terminals at the fuel pump control module, PGM-FI main relay 2 (FUEL PUMP), the fuel pump, and the PCM. ■

5. Turn the ignition switch OFF.
6. Check the No. 2 FUEL PUMP (20 A) fuse in under-dash fuse/relay box.

   *Is the fuse blown?*

   **YES**—Repair short in the wire between PGM-FI main relay 2 (FUEL PUMP) and the No. 2 FUEL PUMP (20 A) fuse. Also replace the No. 2 FUEL PUMP (20 A) fuse, then go to step 79.

   **NO**—Go to step 7.

7. Disconnect the fuel pump control module 10P connector (see page 11-388).
8. Turn the ignition switch ON (II), and measure voltage between fuel pump control module 10P connector terminals No. 3 and No. 8 within 2 seconds.

**FUEL PUMP CONTROL MODULE 10P CONNECTOR**

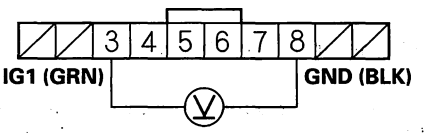


Wire side of female terminals

*Is there battery voltage?*

**YES**—Go to step 35.

**NO**—Go to step 9.

9. Turn the ignition switch OFF.
10. Remove the driver's dashboard under cover (see page 20-102), then remove PGM-FI main relay 2 (FUEL PUMP) (A) from the under-dash fuse/relay box.

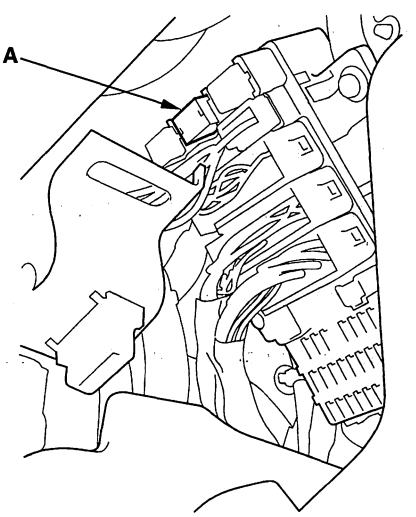


(cont'd)

Protected by AR



## DTC Troubleshooting (cont'd)

11. Test PGM-FI main relay 2 (FUEL PUMP) (see page 22-64).

    *Is PGM-FI main relay 2 (FUEL PUMP) OK?*

    **YES**—Go to step 12.

    **NO**—Replace PGM-FI main relay 2 (FUEL PUMP), then go to step 79.

12. Turn the ignition switch ON (II).

13. Measure voltage between PGM-FI main relay 2 (FUEL PUMP) 4P connector terminal No. 4 and body ground.

**PGM-FI MAIN RELAY 2 (FUEL PUMP) 4P CONNECTOR**

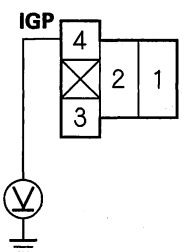


Terminal side of female terminals

*Is there battery voltage?*

**YES**—Go to step 20.

**NO**—Go to step 14.

14. Turn the ignition switch OFF.

15. Disconnect the under-hood fuse/relay box 10P connector.

16. Disconnect the engine wire harness 23P connector.

17. Disconnect the under-dash fuse/relay box 21P connector.

18. Connect under-dash fuse/relay box 21P connector terminal No. 4 to body ground with a jumper wire.

**UNDER-DASH FUSE/RELAY BOX 21P CONNECTOR**

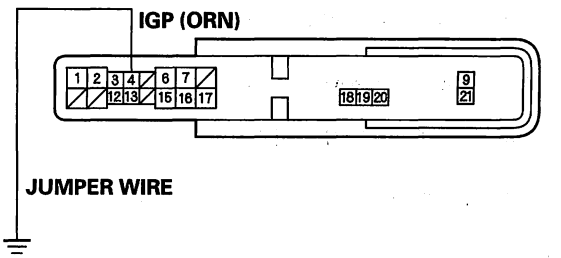


Wire side of female terminals

19. Check for continuity between under-hood fuse/relay box 10P connector terminal No. 5 and body ground.

**UNDER-HOOD FUSE/RELAY BOX 10P CONNECTOR**

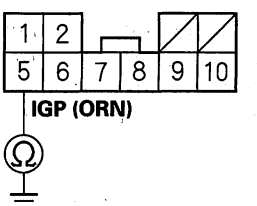


Wire side of female terminals

*Is there continuity?*

**YES**—
- Replace PGM-FI main relay 1. ■
- If needed, replace the under-hood fuse/relay box (see page 22-61). ■

**NO**—Repair open in the wire between the under-hood fuse/relay box and the under-dash fuse/relay box. ■



BACK

Protected by AR

20. Measure voltage between PGM-FI main relay 2 (FUEL PUMP) 4P connector terminal No. 1 and body ground.

**PGM-FI MAIN RELAY 2 (FUEL PUMP) 4P CONNECTOR**

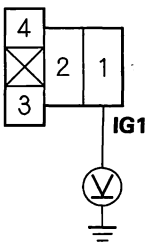


Terminal side of female terminals

*Is there battery voltage?*

**YES**—Go to step 21.

**NO**—Replace the under-dash fuse/relay box (see page 22-62). ■

21. Turn the ignition switch OFF.

22. Connect PGM-FI main relay 2 (FUEL PUMP) 4P connector terminals No. 1 and No. 2 with a jumper wire.

**PGM-FI MAIN RELAY 2 (FUEL PUMP) 4P CONNECTOR**

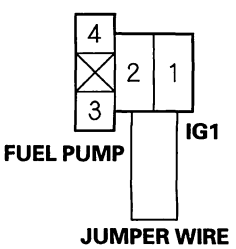


Terminal side of female terminals

23. Turn the ignition switch ON (II), and measure voltage between fuel pump control module 10P connector terminal No. 3 and body ground.

**FUEL PUMP CONTROL MODULE 10P CONNECTOR**

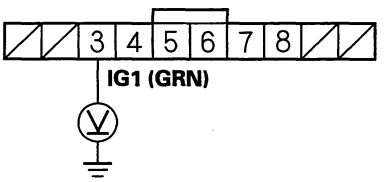


Wire side of female terminals

*Is there battery voltage?*

**YES**—Go to step 24.

**NO**—
- Repair open in the wire between the under-dash fuse/relay box and the fuel pump control module, then go to step 79.
- If needed, replace the under-dash fuse/relay box (see page 22-62), then go to step 79.

24. Turn the ignition switch OFF.

25. Jump the SCS line with the HDS.

26. Disconnect PCM connector A (44P).

(cont'd)

Protected by AR



## DTC Troubleshooting (cont'd)

27. Connect PGM-FI main relay 2 (FUEL PUMP) 4P connector terminal No. 3 to body ground with a jumper wire.

**PGM-FI MAIN RELAY 2 (FUEL PUMP) 4P CONNECTOR**

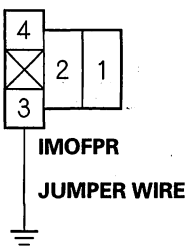


Terminal side of female terminals

28. Check for continuity between PCM connector terminal A15 and body ground.

**PCM CONNECTOR A (44P)**

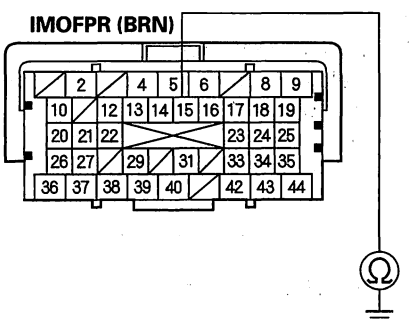


Terminal side of female terminals

*Is there continuity?*

**YES**—Go to step 29.

**NO**—Repair open in the wire between the PCM (A15) and PGM-FI main relay 2 (FUEL PUMP), then go to step 79.

29. Remove the jumper wire.

30. Reinstall PGM-FI main relay 2 (FUEL PUMP).

31. Reconnect PCM connector A (44P).

32. Open SCS line with the HDS.

33. Turn the ignition switch ON (II), and measure voltage between under-dash fuse/relay box 34P connector terminal No. 10 and body ground within 2 seconds.

**UNDER-DASH FUSE/RELAY BOX 34P CONNECTOR**

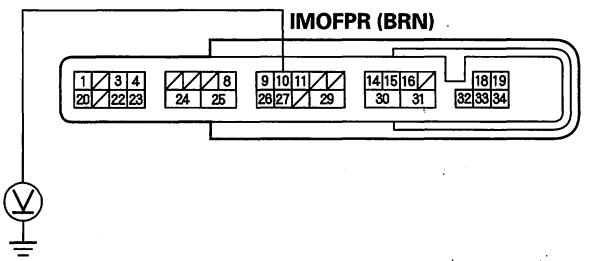


Wire side of female terminals

*Is there battery voltage?*

**YES**—Update the PCM if it does not have the latest software (see page 11-7), or substitute a known-good PCM (see page 11-8), then recheck. If the symptom/indication goes away with a known-good PCM, replace the original PCM (see page 11-252). ■

**NO**—Go to step 34.



BACK

Protected by AR

34. Turn the ignition switch ON (II), and measure voltage between under-dash fuse/relay box 34P connector terminal No. 10 and body ground after 2 seconds.

**UNDER-DASH FUSE/RELAY BOX 34P CONNECTOR**

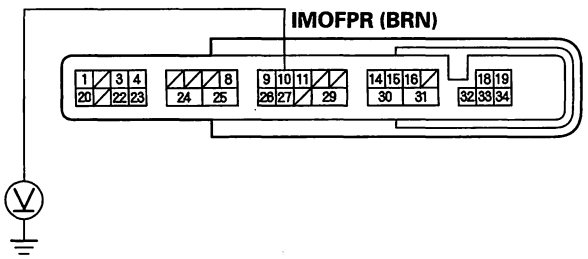


Wire side of female terminals

*Is there battery voltage?*

**YES**—Go to step 85.

**NO**—If needed, replace the under-dash fuse/relay box (see page 22-62), then go to step 79.

35. Turn the ignition switch OFF.

36. Reconnect the fuel pump control module 10P connector (see page 11-388).

37. Turn the ignition switch ON (II).

38. Clear the DTC with the HDS.

39. Turn the ignition switch OFF.

40. Turn the ignition switch ON (II), and check for sound from the fuel pump within 2 seconds.

*Does the fuel pump operate?*

**YES**—Go to step 41.

**NO**—Go to step 60.

41. Turn the ignition switch OFF.

42. Disconnect the fuel pump control module 10P connector.

43. Check for continuity between fuel pump control module 10P connector terminal No. 4 and body ground.

**FUEL PUMP CONTROL MODULE 10P CONNECTOR**

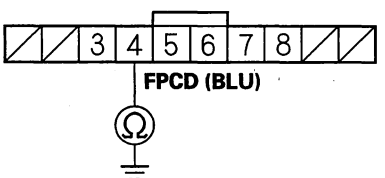


Wire side of female terminals

*Is there continuity?*

**YES**—Go to step 44.

**NO**—Go to step 47.

(cont'd)

Protected by AR



## DTC Troubleshooting (cont'd)

44. Jump the SCS line with the HDS.

45. Disconnect PCM connector A (44P).

46. Check for continuity between PCM connector terminal A38 and body ground.

**PCM CONNECTOR A (44P)**

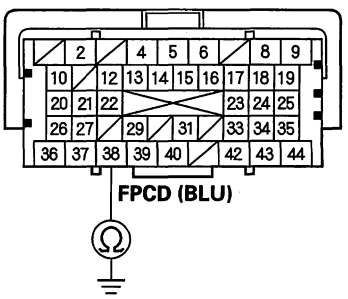


Terminal side of female terminals

*Is there continuity?*

**YES**—Repair short in the wire between the PCM (A38) and the fuel pump control module, then go to step 79.

**NO**—Go to step 86.

47. Jump the SCS line with the HDS.

48. Disconnect PCM connector A (44P).

49. Connect fuel pump control module 10P connector terminal No. 4 to body ground with a jumper wire.

**FUEL PUMP CONTROL MODULE 10P CONNECTOR**

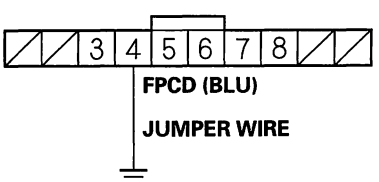


Wire side of female terminals

50. Check for continuity between PCM connector terminal A38 and body ground.

**PCM CONNECTOR A (44P)**

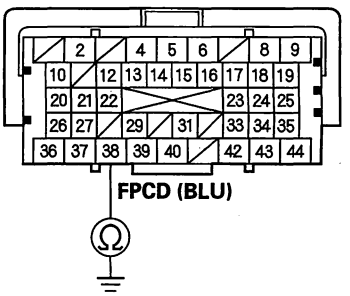


Terminal side of female terminals

*Is there continuity?*

**YES**—Go to step 51.

**NO**—Repair open in the wire between the PCM (A38) and the fuel pump control module, then go to step 79.

51. Remove the jumper wire from the fuel pump control module 10P connector.

52. Reconnect the fuel pump control module 10P connector and PCM connector A (44P).

53. Turn the ignition switch ON (II).



BACK

Protected by AR

54. Measure voltage between fuel pump control module 10P connector terminal No. 4 and body ground.

**FUEL PUMP CONTROL MODULE 10P CONNECTOR**

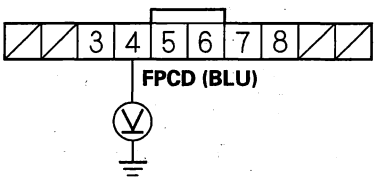


Wire side of female terminals

*Is there about 8 V or more?*

**YES**—Go to step 55.

**NO**—Replace the fuel pump control module (see page 11-388), then go to step 79.

55. Turn the ignition switch OFF.

56. Fold the rear seat down, then remove the left cargo area side trim panel (see page 20-76).

57. Pull back the carpet to expose the access panel (see step 9 on page 20-91), then remove the access panel from the left side of the floor (see page 11-380).

58. Disconnect the fuel pump 4P connector.

59. Check for continuity between fuel pump control module 10P connector terminal No. 7 and body ground.

**FUEL PUMP CONTROL MODULE 10P CONNECTOR**

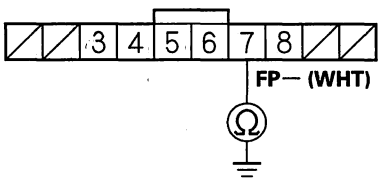


Wire side of female terminals

*Is there continuity?*

**YES**—Repair short in the wire between the fuel pump control module (FP— line) and the fuel pump, then go to step 79.

**NO**—Substitute a known-good fuel pump control module (see page 11-388), then go to step 79 and recheck. If DTC P0627 is not indicated, replace the original fuel pump control module (see page 11-388), then go to step 79. If DTC P0627 is indicated, go to step 85.

60. Turn the ignition switch OFF.

61. Disconnect the fuel pump control module 10P connector (see page 11-388).

(cont'd)

Protected by AR



## DTC Troubleshooting (cont'd)

62. Check for continuity between fuel pump control module 10P connector terminal No. 5 and body ground.

**FUEL PUMP CONTROL MODULE 10P CONNECTOR**

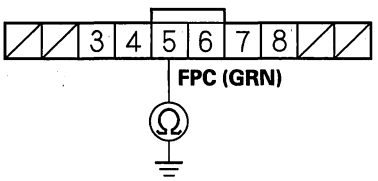


Wire side of female terminals

*Is there continuity?*

**YES**—Go to step 63.

**NO**—Go to step 66.

63. Jump the SCS line with the HDS.

64. Disconnect PCM connector A (44P).

65. Check for continuity between PCM connector terminal A43 and body ground.

**PCM CONNECTOR A (44P)**

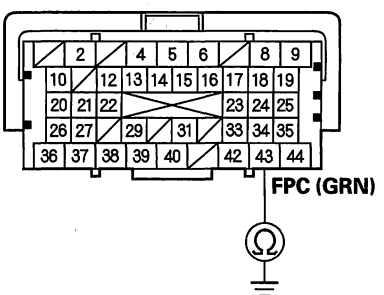


Terminal side of female terminals

*Is there continuity?*

**YES**—Repair short in the wire between the PCM (A43) and the fuel pump control module, then go to step 79.

**NO**—Go to step 86.

66. Reconnect the fuel pump control module 10P connector.



BACK

Protected by AR

67. Turn the ignition switch ON (II), and measure voltage between fuel pump control module 10P connector terminal No. 5 and body ground within 2 seconds.

**FUEL PUMP CONTROL MODULE 10P CONNECTOR**

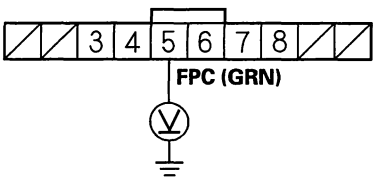


Wire side of female terminals

*Is there battery voltage?*

**YES**—Go to step 68.

**NO**—Replace the fuel pump control module (see page 11-388), then go to step 79.

68. Turn the ignition switch OFF.

69. Fold the rear seat down, then remove the left cargo area side trim panel (see page 20-76).

70. Pull back the carpet to expose the access panel (see step 9 on page 20-91), then remove the access panel from the left side of the floor (see page 11-380).

71. Disconnect the fuel tank unit 4P connector.

72. Disconnect the fuel pump control module 10P connector (see page 11-388).

73. Connect fuel tank unit 4P connector terminal No. 2 to body ground with a jumper wire.

**FUEL TANK UNIT 4P CONNECTOR**

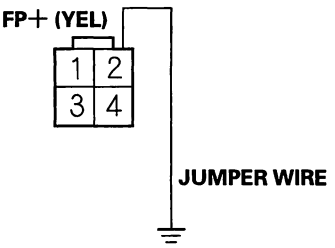


Wire side of female terminals

74. Check for continuity between fuel pump control module 10P connector terminal No. 6 and body ground.

**FUEL PUMP CONTROL MODULE 10P CONNECTOR**

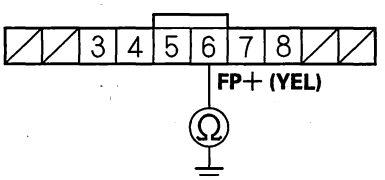


Wire side of female terminals

*Is there continuity?*

**YES**—Go to step 75.

**NO**—Repair open in the wire between the fuel pump control module (FP+ line) and the fuel pump, then go to step 79.

(cont'd)

Protected by AR



## DTC Troubleshooting (cont'd)

75. Remove the jumper wire from the fuel tank unit 4P connector terminal No. 2, then connect between fuel tank unit 4P connector terminal No. 4 to body ground with a jumper wire.

**FUEL TANK UNIT 4P CONNECTOR**

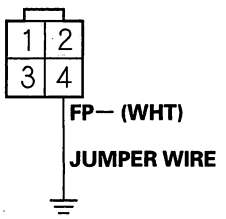


Wire side of female terminals

76. Check for continuity between fuel pump control module 10P connector terminal No. 7 and body ground.

**FUEL PUMP CONTROL MODULE 10P CONNECTOR**

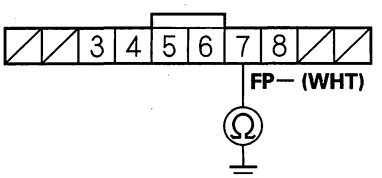


Wire side of female terminals

*Is there continuity?*

**YES**—Go to step 77.

**NO**—Repair open in the wire between the fuel pump control module (FP— line) and the fuel pump, then go to step 79.

77. Remove the jumper wire from the fuel tank unit 4P connector terminal No. 4, and reconnect the fuel pump control module 10P connector.

78. Turn the ignition switch ON (II), and measure voltage between fuel tank unit 4P connector terminal No. 2 and body ground within 2 seconds.

**FUEL TANK UNIT 4P CONNECTOR**

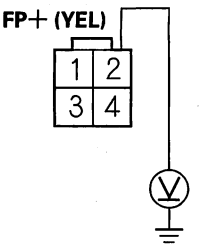


Wire side of female terminals

*Is there battery voltage?*

**YES**—Replace the fuel pump (see page 11-382), then go to step 79.

**NO**—Substitute a known-good fuel pump control module (see page 11-388), then go to step 79 and recheck. If DTC P0627 is not indicated, replace the original fuel pump control module (see page 11-388), then go to step 79. If DTC P0627 is indicated, go to step 85.

79. Turn the ignition switch OFF.

80. Reconnect all connectors.

81. Turn the ignition switch ON (II).

82. Reset the PCM with the HDS.

83. Do the PCM idle learn procedure (see page 11-339).



BACK

Protected by AR

84. Check for Temporary DTCs or DTCs with the HDS.

    *Is DTC P0627 indicated?*

    **YES**—Check for poor connections or loose terminals at the fuel pump control module, PGM-FI main relay 2 (FUEL PUMP), the fuel pump, and the PCM, then go to step 1.

    **NO**—Troubleshooting is complete. If any other Temporary DTCs or DTCs are indicated, go to the indicated DTC's troubleshooting. ■

85. Turn the ignition switch OFF.

86. Reconnect all connectors.

87. Update the PCM if it does not have the latest software (see page 11-7), or substitute a known-good PCM (see page 11-8).

88. Check for Temporary DTCs or DTCs with the HDS.

    *Is DTC P0627 indicated?*

    **YES**—Check for poor connections or loose terminals at the fuel pump control module, PGM-FI main relay 2 (FUEL PUMP), the fuel pump, and the PCM. If the PCM was updated, substitute a known-good PCM (see page 11-8), then recheck. If the PCM was substituted, go to step 1.

    **NO**—If the PCM was updated, troubleshooting is complete. If the PCM was substituted, replace the original PCM (see page 11-252). If any other Temporary DTCs or DTCs are indicated, go to the indicated DTC's troubleshooting. ■

Protected by AR



## Fuel Pressure Relieving

Before disconnecting fuel lines or hoses, relieve pressure from the system by disabling the fuel pump and then disconnecting the fuel tube/quick connect fitting in the engine compartment.

### With the HDS

1. Make sure you have the anti-theft code for the audio system and the navigation system (if equipped).

2. Turn the ignition switch OFF.

3. Connect the HDS to the data link connector (DLC) (A) located under the driver's side of the dashboard.

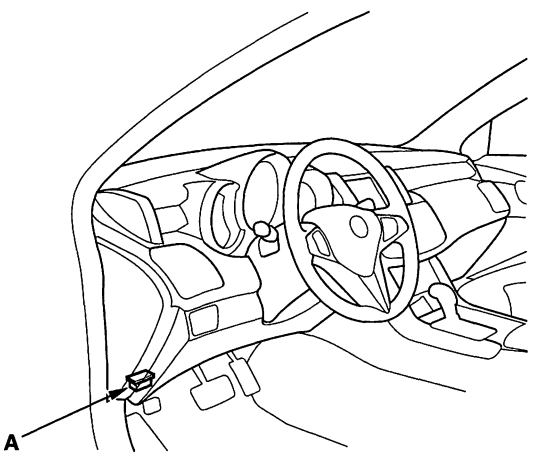


4. Turn the ignition switch ON (II).

5. Make sure the HDS communicates with the PCM and other vehicle systems. If it doesn't, go to the DLC circuit troubleshooting (see page 11-229).

6. Turn the ignition switch OFF.

7. Remove the fuel fill cap to relieve the pressure in the fuel tank.

8. Turn the ignition switch ON (II).

9. From the INSPECTION MENU of the HDS, select Fuel Pump OFF, then start the engine, and let it idle until it stalls.

10. Turn the ignition switch OFF.

    NOTE:
    - Do not allow the engine to idle above 1,000 rpm or the PCM will continue to operate the fuel pump.
    - A DTC or a Temporary DTC may be set during this procedure. Check for DTCs, and clear them as needed (see page 11-4).

11. Turn the ignition switch OFF.

12. Disconnect the negative cable from the battery.

13. Remove the charge air cooler cover (see step 1 on page 9-8) and intake air duct (air flow tube) (see step 19 on page 9-16).

14. Remove the quick-connect fitting cover (A).

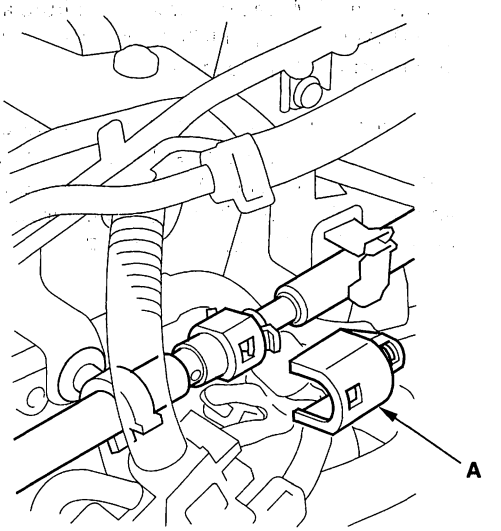




BACK

Protected by AR

15. Check the fuel quick-connect fitting for dirt, and clean it if needed.

16. Place a rag or shop towel over the quick-connect fitting (A).

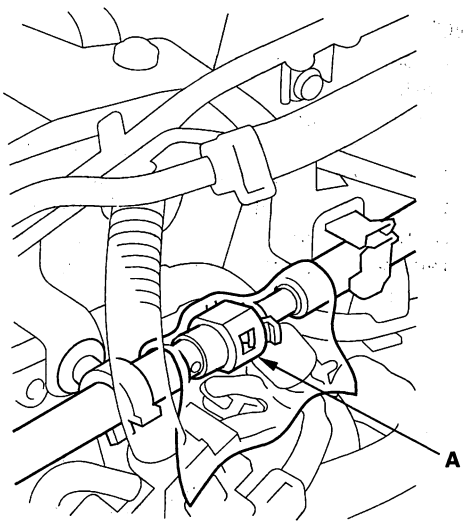


17. Disconnect the quick-connect fitting (A): Hold the connector (B) with one hand, and squeeze the retainer tabs (C) with the other hand to release them from the locking tabs (D). Pull the connector off.

    NOTE:
    - Be careful not to damage the line (E) or other parts.
    - Do not use tools.
    - If the connector does not move, keep the retainer tabs pressed down, and alternately pull and push the connector until it comes off easily.
    - Do not remove the retainer from the line; once removed, the retainer must be replaced with a new one.

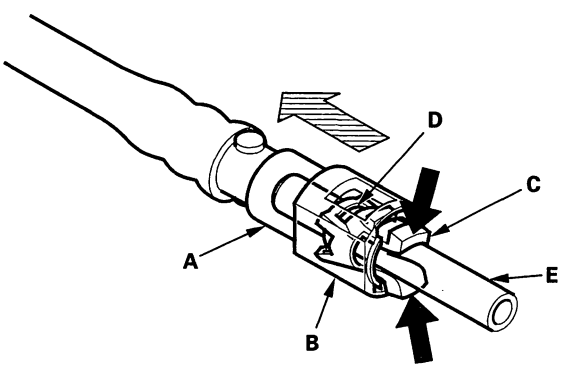


18. After disconnecting the quick-connect fitting, check it for dirt or damage (see step 4 on page 11-373).

19. Reconnect the negative cable to the battery, then do this:

    - Enter the anti-theft code for the audio system and the navigation system (if equipped).
    - Set the clock.

## Without the HDS

1. Make sure you have the anti-theft code for the audio system and the navigation system (if equipped).

2. Remove the driver's dashboard under cover (see page 20-102), then remove PGM-FI main relay 2 (FUEL PUMP) (A) from the under-dash fuse/relay box.

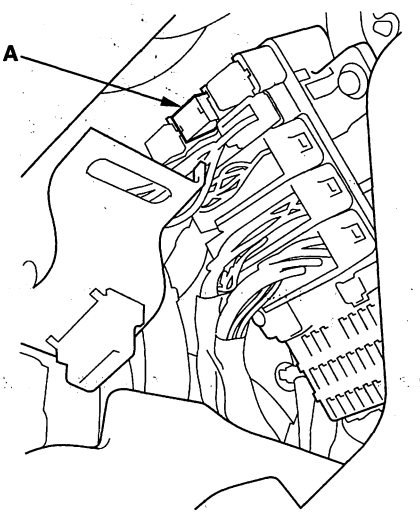


3. Start the engine, and let it idle until it stalls.

    NOTE: If any DTCs are stored, clear and ignore them.

(cont'd)

Protected by AR



## Fuel Pressure Relieving (cont'd)

4. Turn the ignition switch OFF.

5. Remove the fuel fill cap.

6. Disconnect the negative cable from the battery.

7. Remove the charge air cooler cover (see step 1 on page 9-8) and intake air duct (air flow tube) (see step 19 on page 9-16).

8. Remove the quick-connect fitting cover (A).

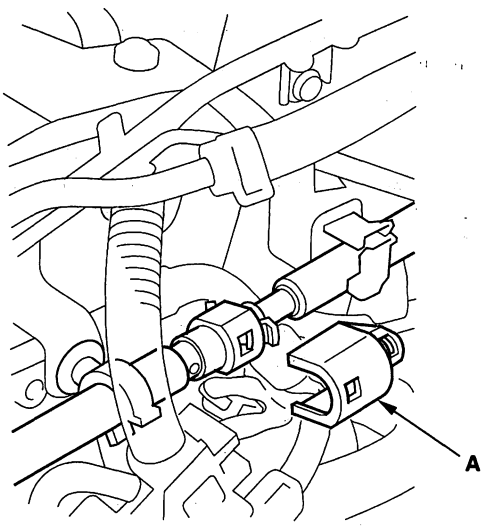


9. Check the fuel quick-connect fitting for dirt, and clean it if needed.

10. Place a rag or shop towel over the quick-connect fitting (A).

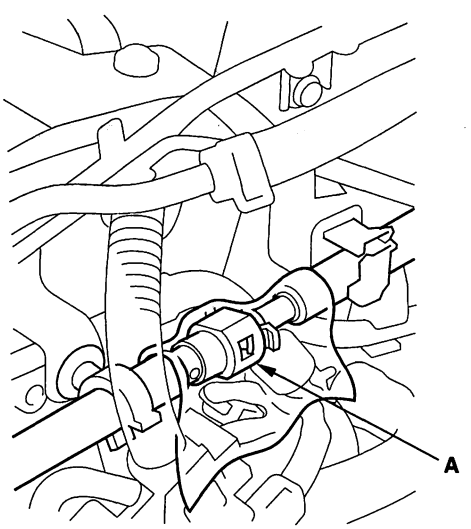


11. Disconnect the quick-connect fitting (A): Hold the connector (B) with one hand, and squeeze the retainer tabs (C) with the other hand to release them from the locking tabs (D). Pull the connector off.

    NOTE:
    - Be careful not to damage the line (E) or other parts.
    - Do not use tools.
    - If the connector does not move, keep the retainer tabs pressed down, and alternately pull and push the connector until it comes off easily.
    - Do not remove the retainer from the line; once removed, the retainer must be replaced with a new one.

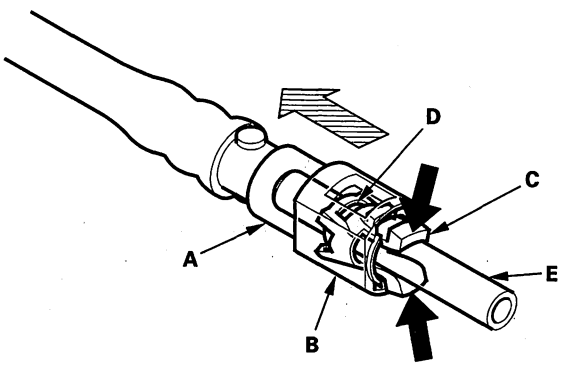


12. After disconnecting the quick-connect fitting, check it for dirt or damage (see step 4 on page 11-373).

13. Reconnect the negative cable to the battery, then do this:

    - Enter the anti-theft code for the audio system and the navigation system (if equipped).
    - Set the clock.



BACK

Protected by AR

# Fuel Pressure Test

**Special Tools Required**
- Fuel pressure gauge 07406-004000B
- Fuel pressure gauge attachment set 07AAJ-S6MA150

1. Relieve the fuel pressure (see page 11-362).

2. Disconnect the vacuum hose (A) from the fuel pressure regulator (B), and pinch it closed with a clamp (C).

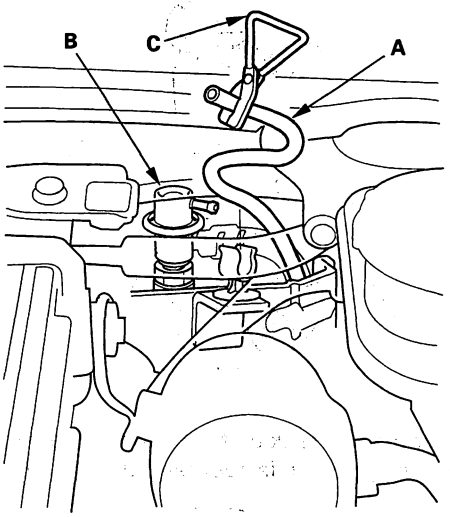


3. Disconnect the quick-connect fitting. Attach the fuel pressure gauge set and the fuel pressure gauge.

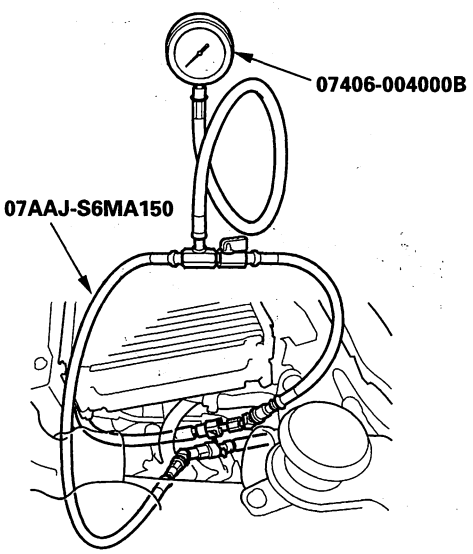


4. Reinstall the intake air duct (air flow tube) (see step 16 on page 9-20).

5. Start the engine, and let it idle.

   - If the engine starts, go to step 7.
   - If the engine does not run, go to step 6.

6. Check to see if the fuel pump is running: Listen to the fuel filler port with the fuel fill cap removed. The fuel pump should run for 2 seconds when the ignition switch is first turned on.

   - If the pump runs, go to step 7.
   - If the pump does not start, refer to the DTC troubleshooting.

7. Read the fuel pressure gauge. The pressure should be 320—370 kPa (3.3—3.8 kgf/cm$^2$, 47—54 psi).

8. With the engine running, unpinch and reconnect the vacuum hose while you watch the pressure gauge. The pressure should fall when you connected the hose.

   - If the pressure falls, and the fuel pressure was OK in step 7, the test is complete.
   - If the pressure did not fall, check the vacuum line between the pressure regulator and the intake manifold. If the line is OK, replace the fuel pressure regulator (see page 11-378).
   - If the pressure falls, but the fuel pressure was lower than specified in step 7, check for a clogged fuel filter (see page 11-382), and for leaks in the fuel lines (see page 11-368).
   - If the pressure falls, but the fuel pressure was higher than specified in step 7, check for a pinched or clogged fuel return hose or line (see page 11-368).

Protected by AR



## Transfer Fuel Pump Test

**Special Tools Required**
Vacuum pump/gauge, 0—30 in.Hg, Snap-on YA4000A or equivalent, commercially available

1. Remove the secondary fuel gauge sending unit (see page 11-383).
2. Connect the vacuum pump/gauge 0—30 in.Hg to the transfer tube (A).

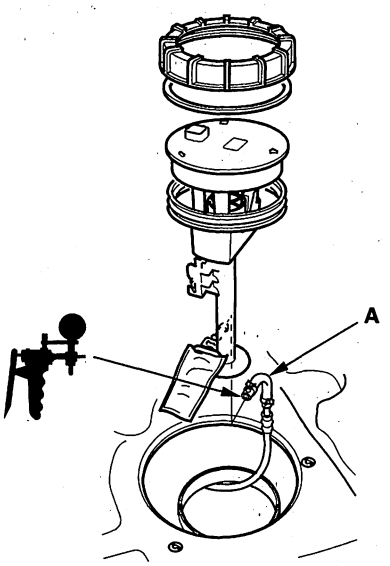


3. Turn the ignition switch ON (II).
4. From the INSPECTION MENU of the HDS, select Fuel Pump ON.
5. Read the vacuum pump/gauge 0—30 in.Hg. The vacuum should be 4.0 kPa (1.2 in.Hg, 30 mmHg).
   - If the vacuum is OK, the transfer fuel pump and transfer tube is OK.
   - If the vacuum is out of specification, go to step 6.
6. Turn the ignition switch OFF.
7. Install the secondary fuel gauge sending unit (see page 11-383).
8. Remove the fuel tank unit (see page 11-380).
9. Connect the vacuum pump/gauge 0—30 in.Hg to the fuel tank unit.

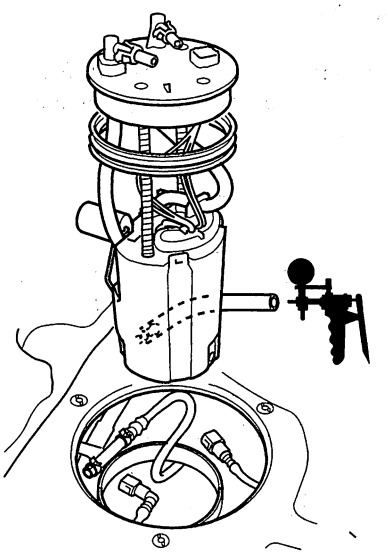

10. Lower the fuel tank unit (A) into the fuel tank until the pick up screen is submerged in the fuel.

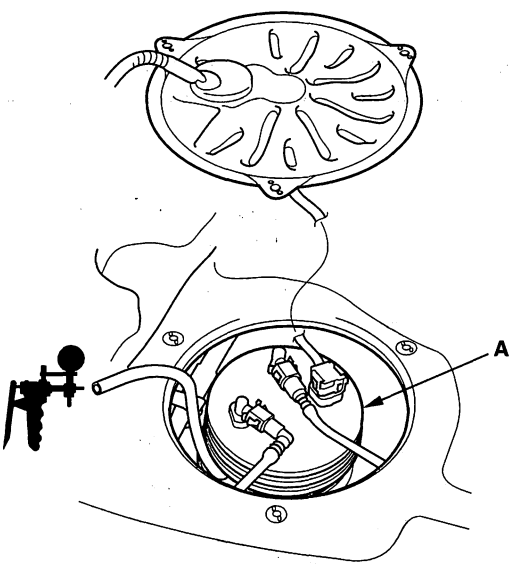


11. Connect the fuel tank unit 4P connector.



BACK

Protected by AR

12. Turn the ignition switch ON (II).

13. From INSPECTION MENU of the HDS, select Fuel Pump ON.

14. Read the vacuum pump/gauge 0—30 in.Hg. The vacuum should be 4.0 kPa (1.2 in.Hg, 30 mmHg).

    - If the vacuum is OK, replace the transfer tube, then recheck the fuel vacuum.
    - If the vacuum is out of specification, replace the fuel tank unit (see page 11-380), then recheck the fuel vacuum.

## Fuel Tank Draining

1. Remove the fuel tank unit (see page 11-380).

2. Using a hand pump, a hose, and a container suitable for fuel, draw the fuel from the fuel tank.

3. Reinstall the fuel tank unit (see page 11-380).

Protected by AR



## Fuel Line Inspection

Check the fuel system lines and hoses for damage, leaks, and deterioration. Replace any damaged parts.

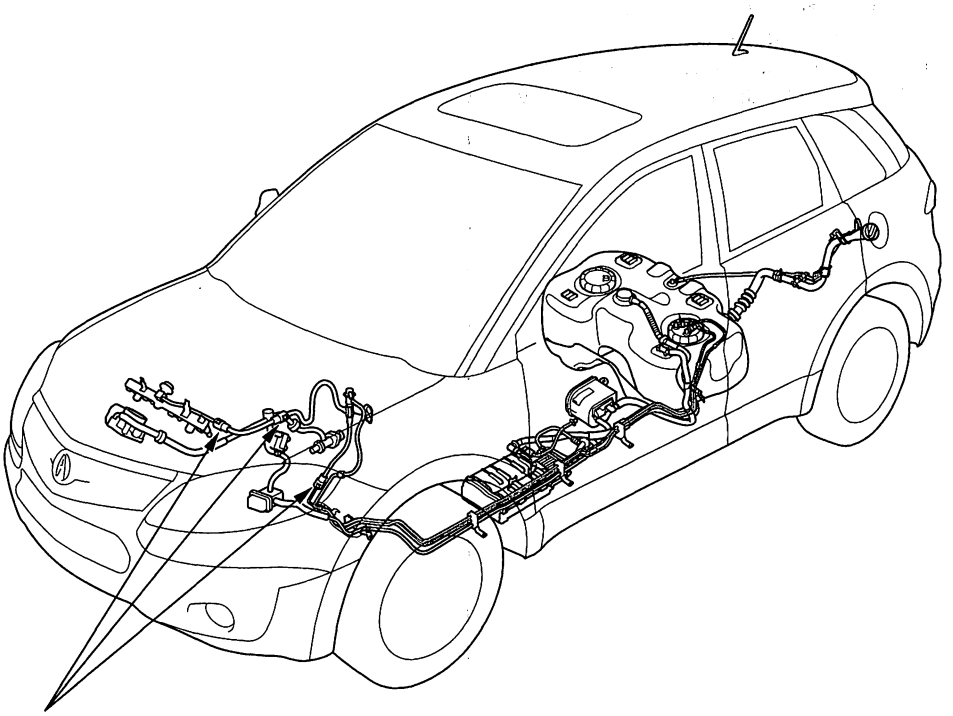

Make sure the connections are secure and the quick-connect fitting covers are firmly locked in place.



BACK

Protected by AR

Check all clamps, and retighten if necessary.

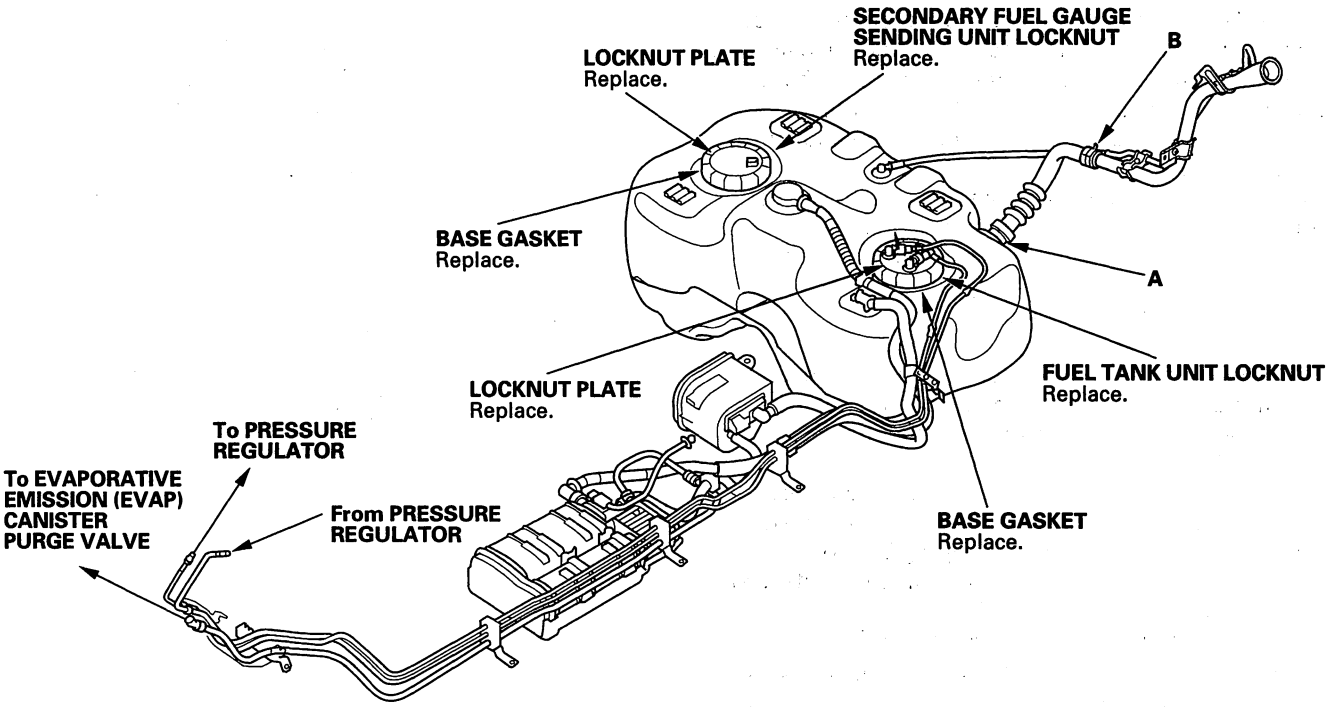


A:

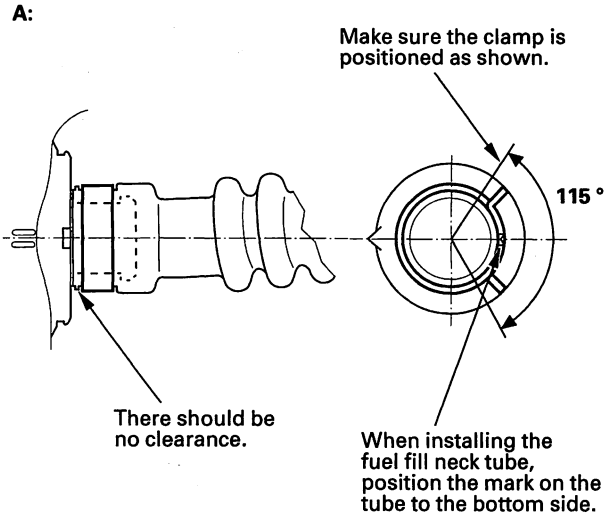


B:

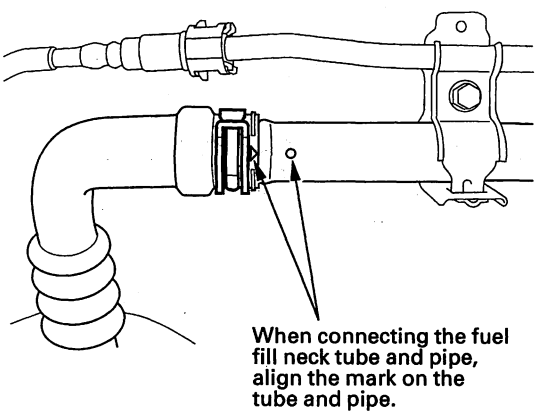

Protected by AR



## Fuel Line/Quick-Connect Fitting Precautions

The fuel line/quick-connect fittings (A), (B), (C), (D), (E), and (F) connect the fuel rail (G) to the fuel feed hose (H), the fuel feed hose to the fuel pressure regulator base (I), the fuel pressure regulator base to the fuel feed line (J), the fuel feed line (K) and fuel return line (L) to the fuel tank unit (M), the fuel vapor line (O) to the EVAP canister (P), and the fuel tank vapor recirculation tube (Q) to the fuel fill pipe (F).
When removing or installing the fuel feed hose, fuel pressure regulator base, the fuel tank unit, the fuel tank, or the fuel fill pipe, it is necessary to disconnect or connect the quick-connect fittings.
Pay attention to the following:

- The fuel feed hoses, fuel line, and quick-connect fittings are not heat-resistant; be careful not to damage them during welding or other heat-generating procedures.
- The fuel feed hoses, fuel line, and quick-connect fittings are not acid-proof; do not touch them with a shop towel that was used for wiping battery electrolyte. Replace them if they come in contact with electrolyte or something similar.
- When connecting or disconnecting the fuel feed hoses, fuel line, and quick-connect fittings, be careful not to bend or twist them excessively. Replace them if they are damaged.

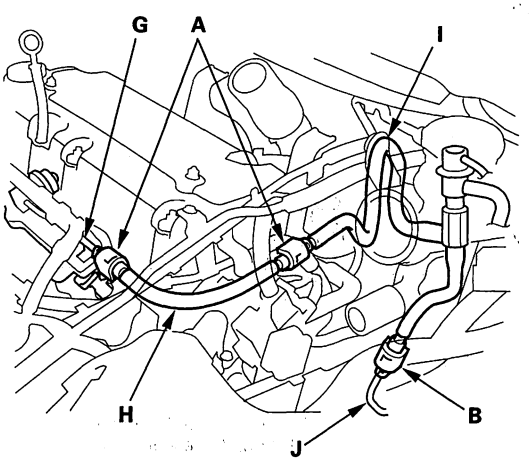


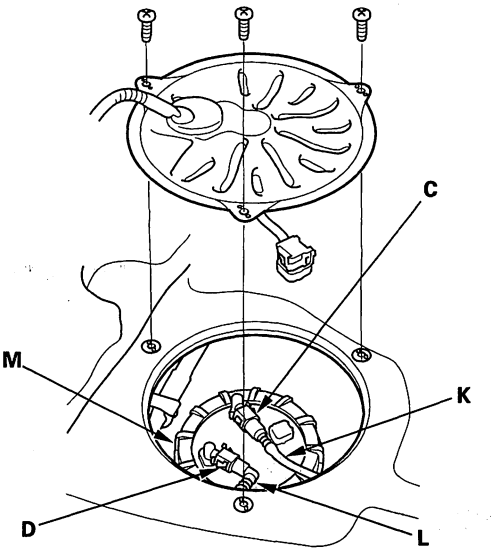


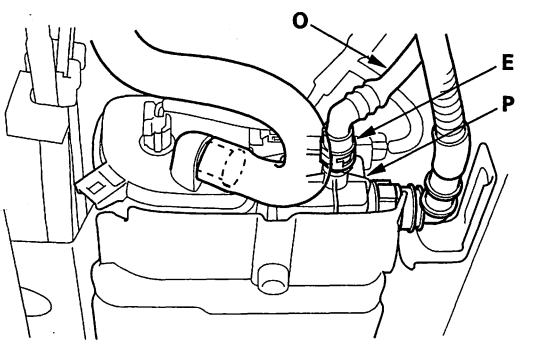


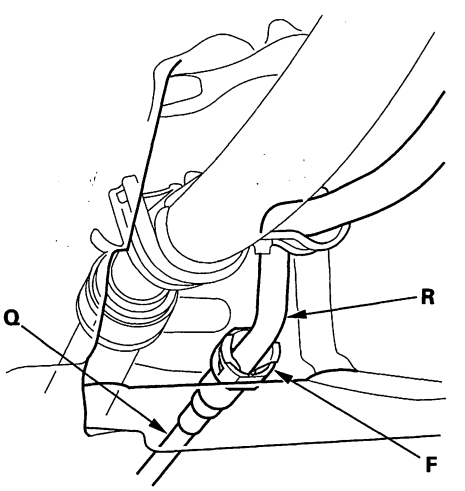




BACK

Protected by AR

A disconnected quick-connect fitting can be reconnected, but the retainer on the mating line cannot be reused once it has been removed from the line. Replace the retainer when:

- replacing the fuel rail.
- replacing the fuel line.
- replacing the fuel return line.
- replacing the fuel pump.
- replacing the fuel filter.
- replacing the fuel gauge sending unit.
- replacing the EVAP purge line.
- replacing the EVAP canister.
- replacing the fuel tank.
- replacing the fuel fill pipe.
- it has been removed from the line.
- it is damaged.

| Location | Manufacturer | Retainer color | Line diameter |
|---|---|---|---|
| A | Tokai | Blue Green | 0.3 in. (8 mm) |
| B | Sanoh | White | 0.3 in. (8 mm) |
| C | Sanoh | White | 0.4 in. (9.5 mm) |
| D | Sanoh | White | 0.3 in. (8 mm) |
| E | Sanoh | White | 0.4 in. (9.5 mm) |
| F | Tokai | Natural | 0.5 in. (12 mm) |

Protected by AR



## Fuel Line/Quick-Connect Fitting Removal

NOTE: Before you work on the fuel lines and fittings, read the "Fuel Line/Quick-Connect Fitting Precautions" (see page 11-370).

1. Relieve the fuel pressure (see page 11-362).
2. Check the fuel quick-connect fittings (A) for dirt, and clean them if needed.

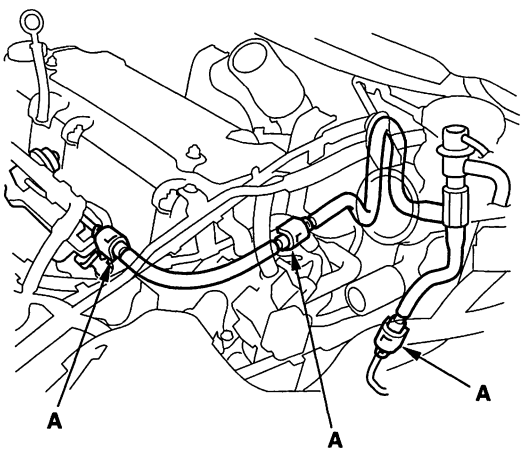


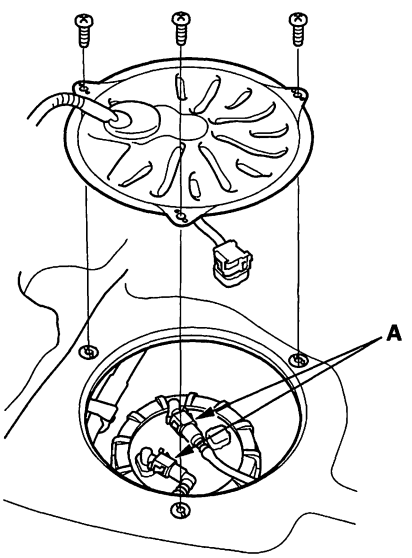


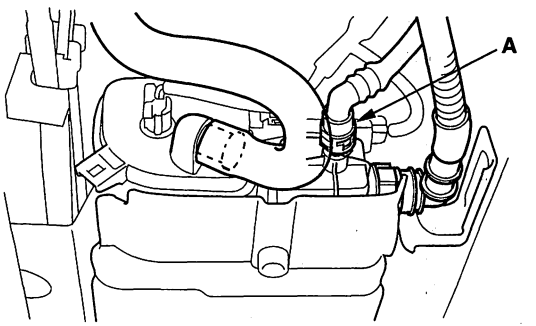


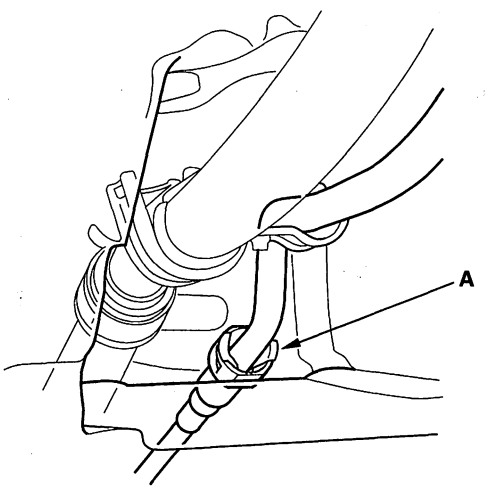




BACK

Protected by AR

3. Place a rag or shop towel over the quick-connect fitting. Hold the connector (A) with one hand, and squeeze the retainer tabs (B) with the other hand to release them from the locking tabs (C). Pull the connector off.

   NOTE:
   - Be careful not to damage the line (D) or other parts. Do not use tools.
   - If the connector does not move, keep the retainer tabs pressed down, and alternately pull and push the connector until it comes off easily.
   - Do not remove the retainer from the line; once removed, the retainer must be replaced with a new one.

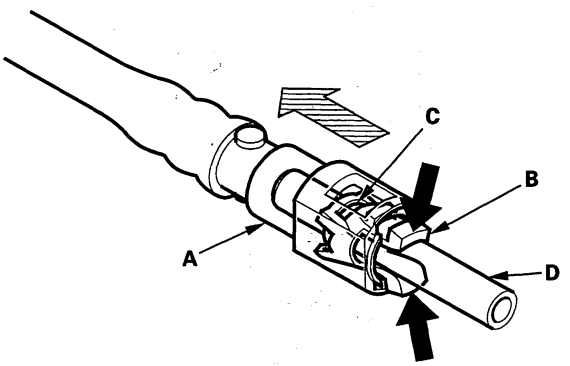


4. Check the contact area (A) of the line (B) for dirt or damage.

   - If dirty, clean the connector with a pressure washer, and dry it with the compressed air.
   - If it is rusty or damaged, replace the fuel filter, or fuel feed line.

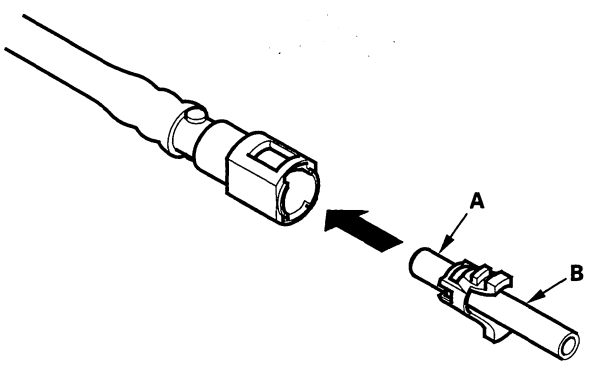


5. To prevent damage and keep foreign matter out, cover the disconnected connector and line ends with plastic bags (A).

   NOTE: The retainer cannot be reused once it has been removed from the line.
   Replace the retainer when:
   - replacing the fuel rail.
   - replacing the fuel feed line.
   - replacing the fuel return line.
   - replacing the fuel pump.
   - replacing the fuel filter.
   - replacing the fuel gauge sending unit.
   - replacing the EVAP purge pipe.
   - replacing the EVAP canister.
   - replacing the fuel tank.
   - replacing the fuel fill pipe.
   - it has been removed from the line.
   - it is damaged.

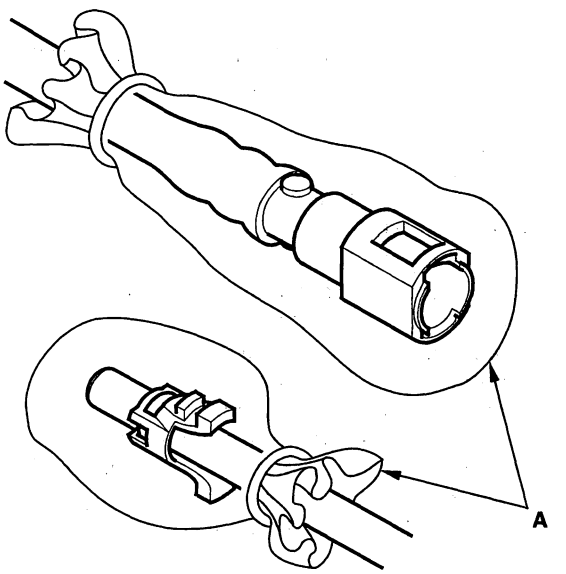

Protected by AR



## Fuel Line/Quick-Connect Fitting Installation

NOTE: Before you work on the fuel lines and fittings, read the "Fuel Line/Quick-Connect Fitting Precautions" (see page 11-370).

1. Check the contact area (A) of the line (B) for dirt or damage, and clean it if needed.

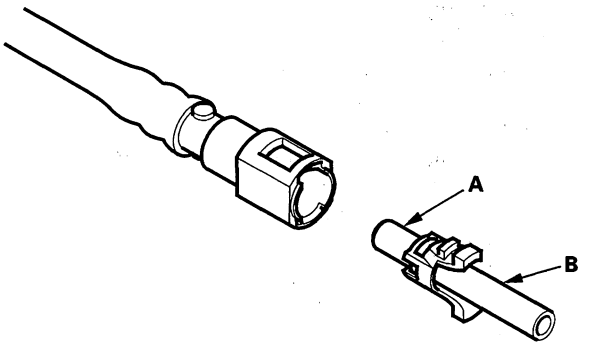


2. Insert a new retainer (A) into the connector (B) if the retainer is damaged, or after:

   - replacing the fuel rail.
   - replacing the fuel feed line.
   - replacing the fuel return line.
   - replacing the fuel pump.
   - replacing the fuel filter.
   - replacing the fuel gauge sending unit.
   - replacing the EVAP purge pipe.
   - replacing the EVAP canister.
   - replacing the fuel tank.
   - replacing the fuel fill pipe.
   - removing the retainer from the line.
   - Use the same manufacturer retainer and the same size retainer when the replacing the retainer (see page 11-370).

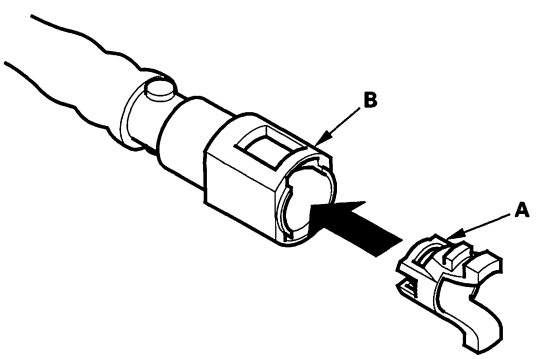


3. Before connecting a new fuel tube/quick-connect fitting assembly (A), remove the old retainer from the mating line.

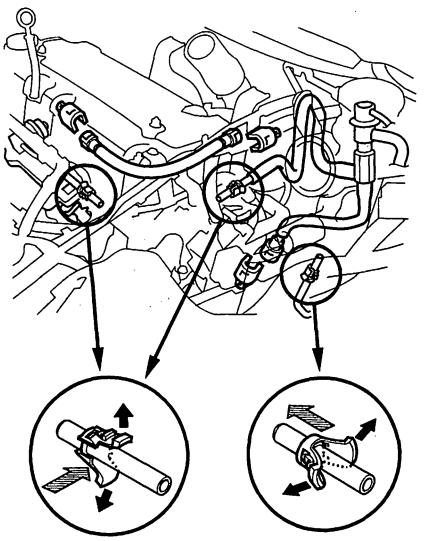

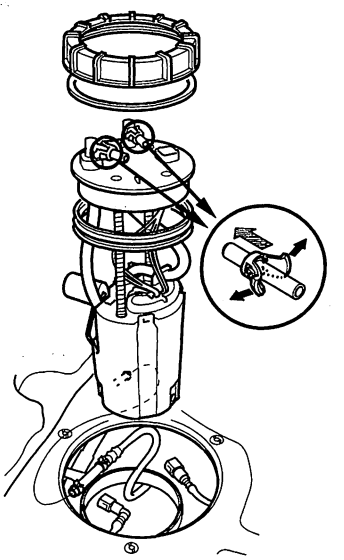



BACK

Protected by AR

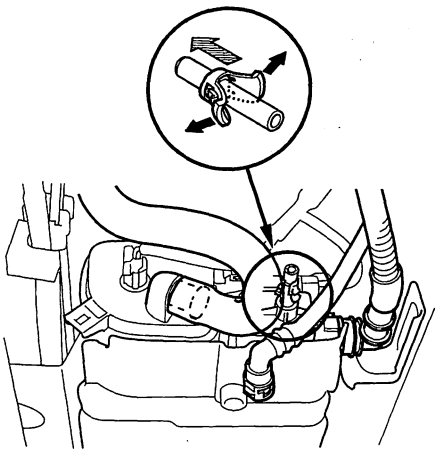

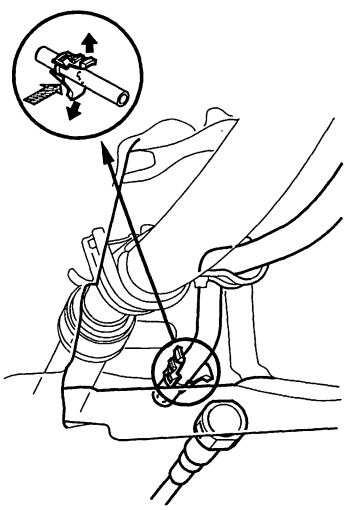

4. Align the quick-connect fittings with the line (A), and align the retainer locking tabs (B) with the connector grooves (C). Then press the quick-connect fittings onto the line until both retainer tabs lock with a clicking sound.

   NOTE: If it is hard to connect, put a small amount of new engine oil on the line end.

**Connection with new retainer**

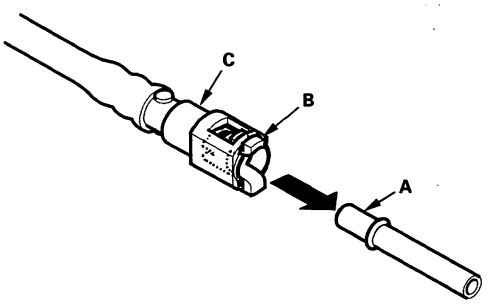


**Reconnection to existing retainer**

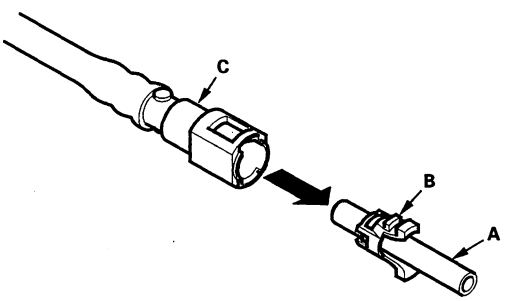


**Connection to new fuel line**

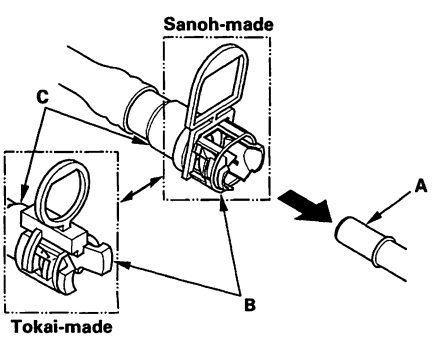


(cont'd)

Protected by AR



## Fuel Line/Quick-Connect Fitting Installation (cont'd)

5. When you reconnect the connector with the old retainer, make sure the connection is secure and the tabs are firmly locked into place; check visually and also by pulling the connector. When you replace the fuel line with a new one, make sure you remove the ring pull upwards after you confirm the connection is secure.

   NOTE: Before you remove the ring pull, make sure the fuel line connection is secure. If the connection is not secure, the ring pull could break when you try to remove it.

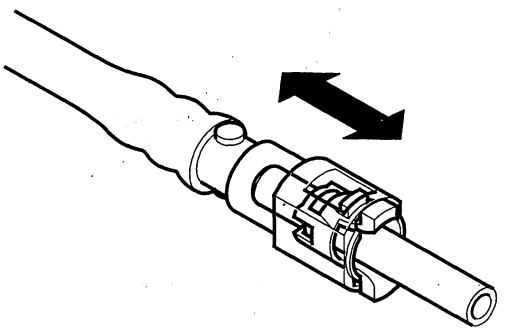

**Connection to new fuel line**

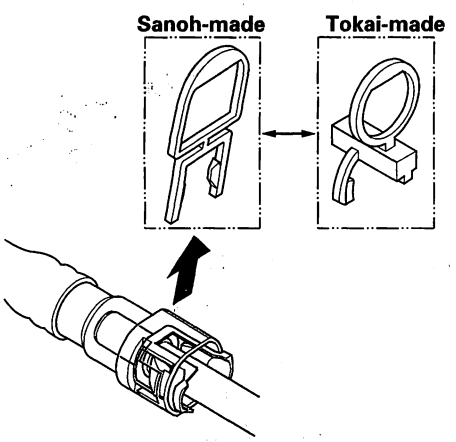


6. Reconnect the negative cable to the battery, and turn the ignition switch ON (II) (but do not operate the starter motor). The fuel pump will run for about 2 seconds, and fuel pressure will rise. Repeat this two or three times, and check that there is no leakage in the fuel supply system.



BACK

Protected by AR

## Fuel Pulsation Damper Replacement

1. Relieve the fuel pressure (see page 11-362).
2. Remove the charge air cooler (see page 9-7).
3. Remove the injector cover (see step 3 on page 11-243).
4. Disconnect the connectors from the injectors, then, Remove the harness holder (see step 4 on page 11-243).
5. Remove the fuel pulsation damper (A) from the fuel rail (B).

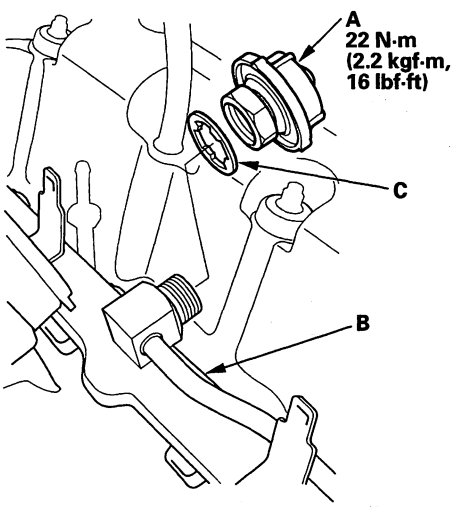


6. Install the parts in the reverse order of removal with a new sealing washer (C).

Protected by AR



## Fuel Pressure Regulator Replacement

1. Relieve the fuel pressure (see page 11-362).

2. Remove the charge air cooler (see page 9-7).

3. Remove the pressure regulator cover (A).

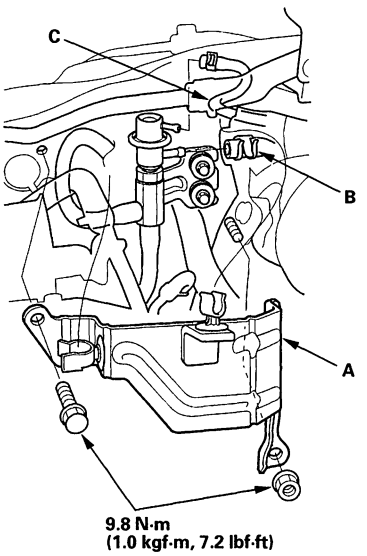


4. Disconnect the fuel return hose (B), and vacuum hose (C).

5. Loosen the nut (A), then remove the fuel pressure regulator (B).

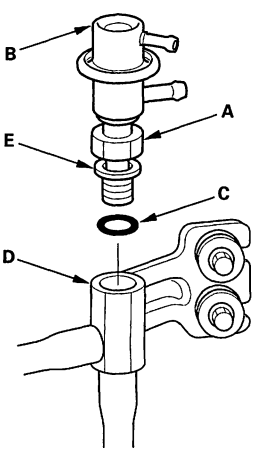


6. Coat the new O-ring (C) with clean engine oil, and install the fuel pressure regulator into the fuel pressure regulator base (D) by hand until the washer (E) is pressed between the base and the regulator.

   NOTE: Do not fully tighten the fuel pressure regulator yet.

7. Make sure the fuel return pipe (A) is positioned as shown. If needed, turn the fuel pressure regulator counterclockwise to line up the pipe.

   NOTE:
   - Do not turn the fuel pressure regulator clockwise.
   - Do not turn the fuel pressure regulator counterclockwise more than once complete turn.

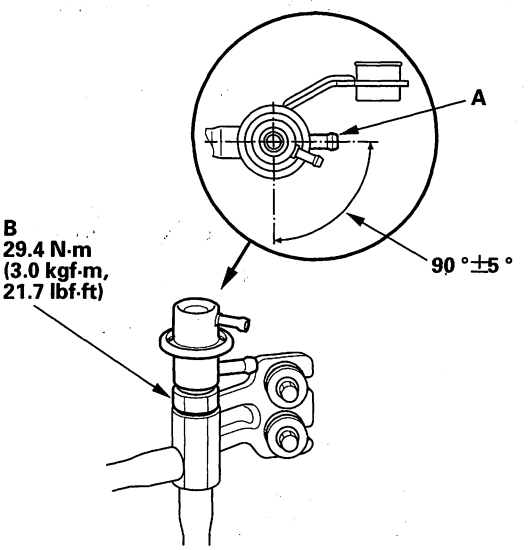


8. Tighten the nut (B) to the specified torque.

9. Connect the fuel return hose and vacuum hose.

10. Install the pressure regulator cover, then install the charge air cooler (see page 9-9).



BACK

Protected by AR

## Fuel Pressure Regulator Base Replacement

1. Remove the fuel pressure regulator (see page 11-378).

2. Remove the bolt (A) and nut (B), then remove the fuel pipe protector (C).

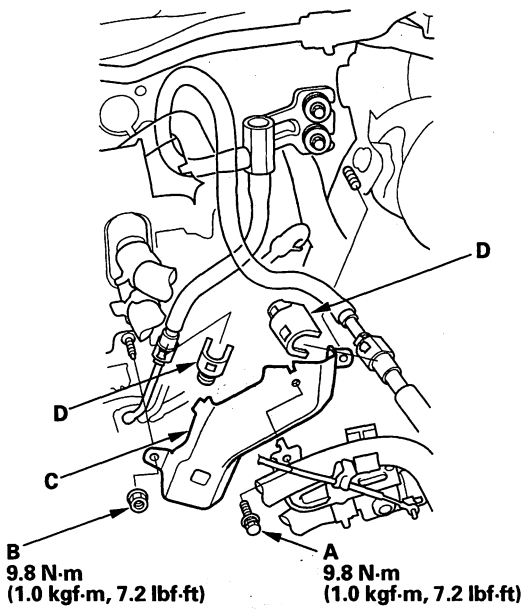


3. Remove the quick-connect fitting covers (D).

4. Disconnect the quick-connect fittings (A).

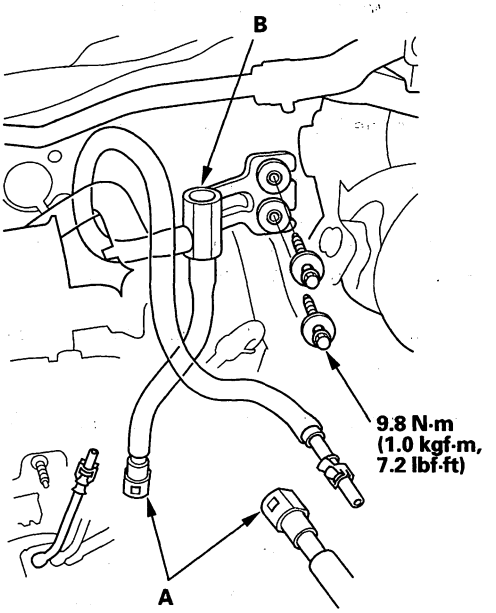


5. Remove the pressure regulator base (B).

6. Reinstall the parts in the reverse order of removal.

Protected by AR



## Fuel Tank Unit Removal/Installation

**Special Tools Required**
Fuel sender wrench 07AAA-S0XA100

### Removal

1. Relieve the fuel pressure (see page 11-362).
2. Remove the fuel fill cap.
3. Fold the rear seat down, then remove the left cargo area side trim panel (see page 20-76).
4. Pull back the carpet to expose the access panel (see step 9 on page 20-91).
5. Remove the access panel (A) from the left side of the floor.

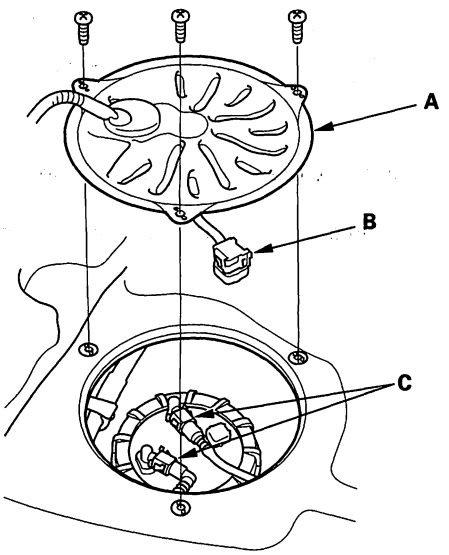


6. Disconnect the fuel tank unit 4P connector (B).
7. Disconnect the quick-connect fittings (C) from the fuel tank unit.
8. Using the special tool, loosen the locknut (A).

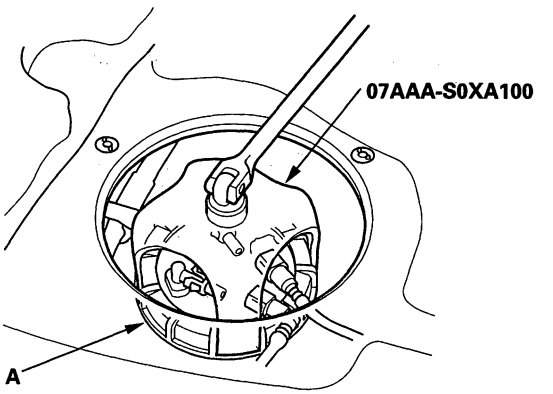


9. Remove the locknut (A).

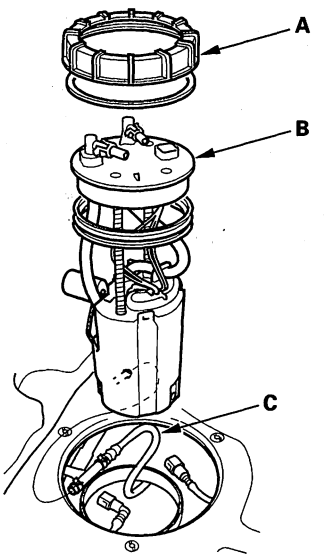


10. Remove the fuel tank unit (B), and disconnect the transfer tube (C).



BACK

Protected by AR

## Installation

1. Position the mark of the transfer tube (A) up, then connect the tube.

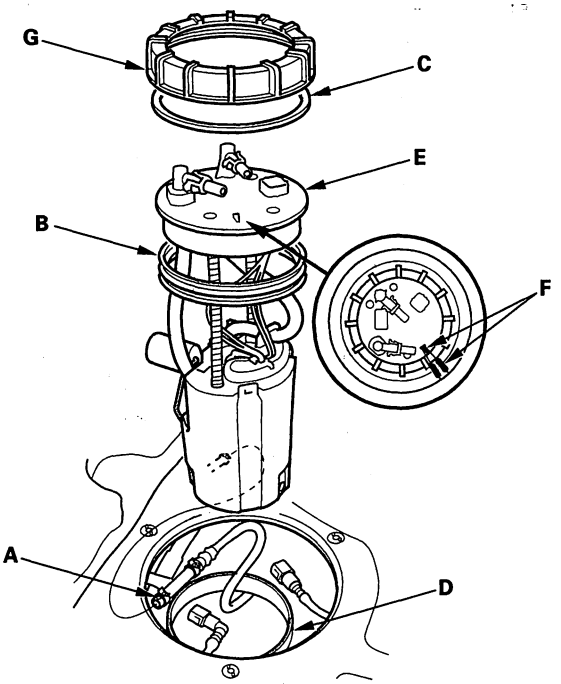


2. Install a new base gasket (B), and locknut plate (C) to the fuel tank (D).

3. Insert the fuel tank unit (E) into the fuel tank. Be careful not to bend the fuel gauge sending unit.

4. Align the marks (F) on the fuel tank and the fuel tank unit, then tighten a new locknut (G) by hand.

   NOTE:
   - After tightening, make sure the marks are aligned. Check circumference of the base gasket visually or by hand and be sure that the gasket is not pinched.
   - Do not coat the base gasket and the locknut plate with engine oil.

5. Using the tool, tighten the fuel tank unit locknut (A).

   NOTE: After installation, check the base gasket visually or by hand to be sure the gasket is not pinched.

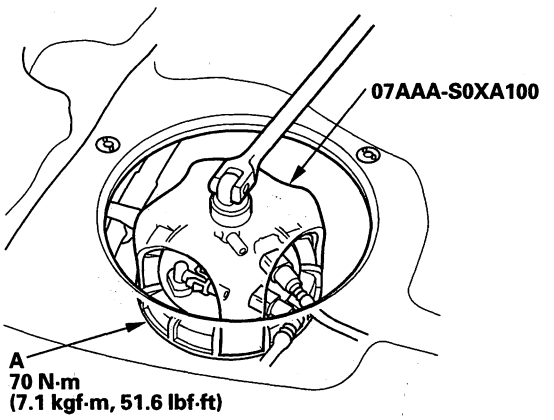

Protected by AR



## Fuel Filter Replacement

The fuel filter should be replaced whenever the fuel pressure drops below the specified value (see page 11-365), after making sure that the fuel pump and the fuel pressure regulator are OK.

1. Remove the fuel tank unit (see page 11-380).
2. Remove the fuel filter set (A).

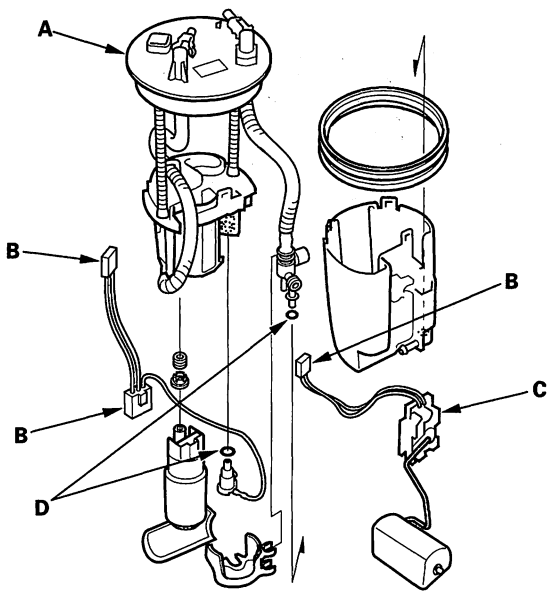


3. Check these items before installing the fuel tank unit:
   - When connecting the wire harness, make sure the connection is secure and the connectors (B) are firmly locked into place.
   - When installing the fuel gauge sending unit (C), make sure the connection is secure and the connector is firmly locked into place. Be careful not to bend or twist it excessively.
4. Install the parts in the reverse order of removal with new O-rings (D).

   NOTE: Coat the O-rings with clean engine oil.
5. Install the fuel tank unit (see page 11-380).

## Fuel Pump/Fuel Gauge Sending Unit Replacement

1. Remove the fuel tank unit (see page 11-380).
2. Remove the fuel level sensor (fuel gauge sending unit) (A) from the fuel tank unit (B).

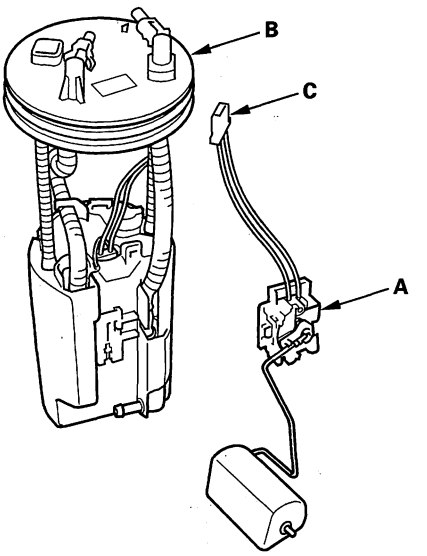


3. Check these items before installing the fuel tank unit:
   - When connecting the wire harness, make sure the connection is secure and the connector (C) it firmly locked into place.
   - When installing the fuel gauge sending unit, make sure the connection is secure and the connector is firmly locked into place. Be careful not to bend or twist it excessively.
4. Install the parts in the reverse order of removal.
5. Install the fuel tank unit (see page 11-380).



BACK

Protected by AR

# Secondary Fuel Gauge Sending Unit Removal/Installation

**Special Tools Required**
Fuel sender wrench 07AAA-S0XA100

## Removal

1. Relieve the fuel pressure (see page 11-362).
2. Remove the fuel fill cap.
3. Fold the rear seat down, then remove the right cargo area side trim panel (see page 20-76).
4. Pull back the carpet to expose the access panel (see step 9 on page 20-91).
5. Remove the access panel (A) from the right side of the floor.

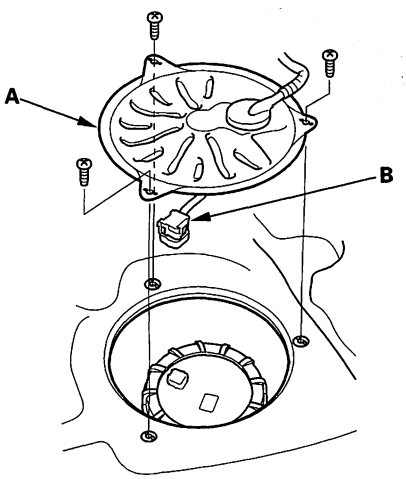


6. Disconnect the fuel tank unit 4P connector (B).
7. Using the special tool, loosen the locknut (A).

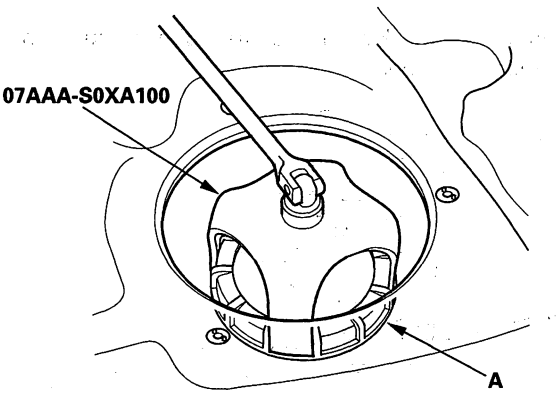


8. Remove the locknut (A).

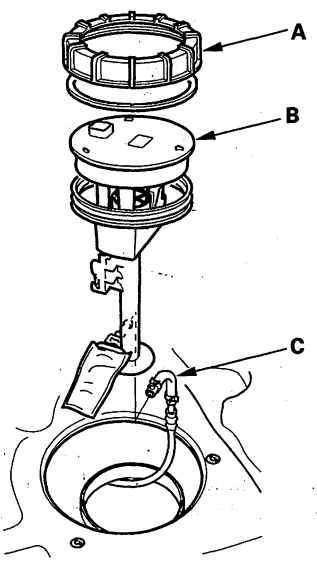


9. Remove the secondary fuel gauge sending unit (B), then disconnect the transfer tube (C).

(cont'd)

Protected by AR



## Secondary Fuel Gauge Sending Unit Removal/Installation (cont'd)

### Installation

1. Position the mark of the transfer tube (A) up, then connect the tube.

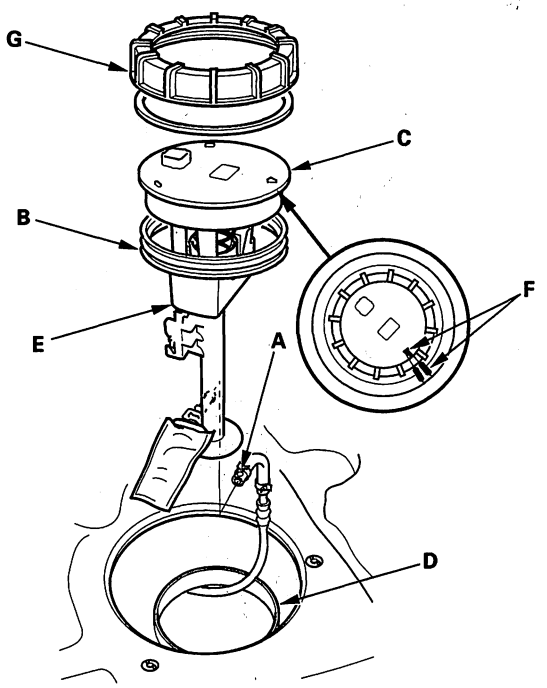


2. Install a new base gasket (B), and locknut plate (C) to the fuel tank (D).

3. Insert the secondary fuel gauge sending unit (E) into the fuel tank. Be careful not to bend the secondary fuel gauge sending unit.

4. Align the marks (F) on the fuel tank and the fuel tank unit, then tighten a new locknut (G) by hand.

   NOTE:
   - After tightening, make sure the marks are aligned. Check circumference of the base gasket visually or by hand and be sure that the gasket is not pinched.
   - Do not coat the base gasket and the locknut plate with engine oil.

5. Using the tool, tighten the fuel tank unit locknut (A).

   NOTE: After installation, check the base gasket visually or by hand to be sure the gasket is not pinched.

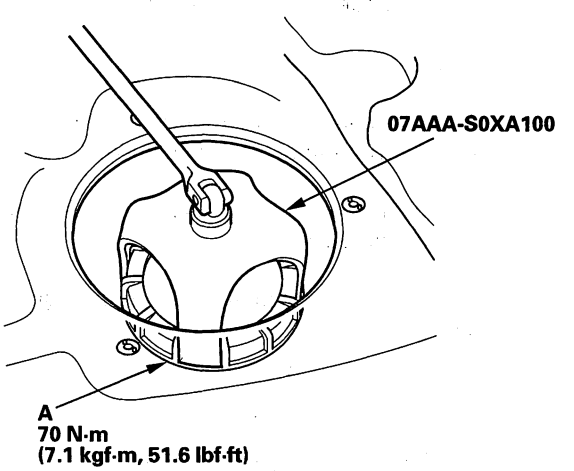




BACK

Protected by AR

## Fuel Tank Replacement

1. Drain the fuel tank (see page 11-367).

2. Reinstall the fuel tank unit without connecting quick-connect fittings and fuel tank unit 4P connector.

3. Disconnect the secondary fuel gauge sending unit 4P connector (see step 5 on page 11-383).

4. Remove the fuel fill pipe cover (A).

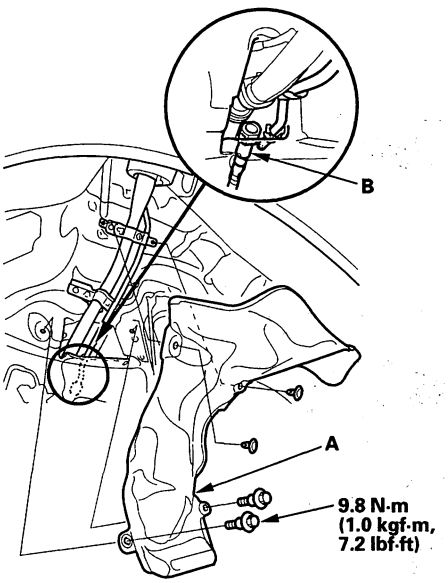


5. Disconnect the quick-connect fitting (B).

6. Lift the vehicle, and support it with jackstands.

7. Disconnect the fuel fill tube (A) from the fuel tank. Slide back the clamp, then twist the tube as you pull to avoid damage it.

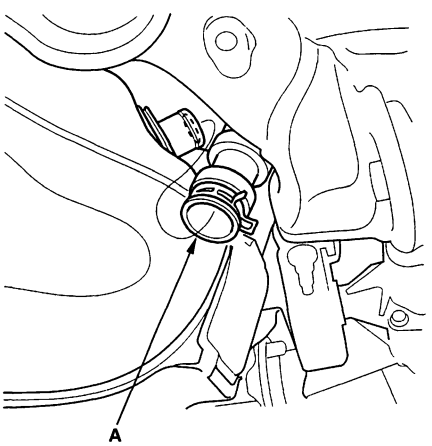


8. Disconnect the fuel vent tube (A).

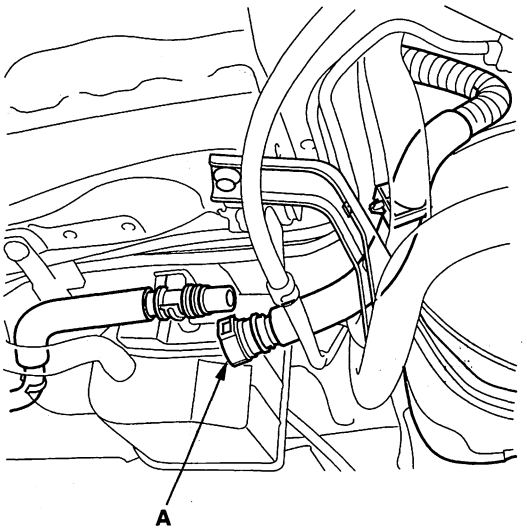


9. Remove the exhaust pipe (see page 9-23).

10. Remove the propeller shaft (see page 16-38).

(cont'd)

Protected by AR



## Fuel Tank Replacement (cont'd)

11. Remove the fuel tank cover (A).

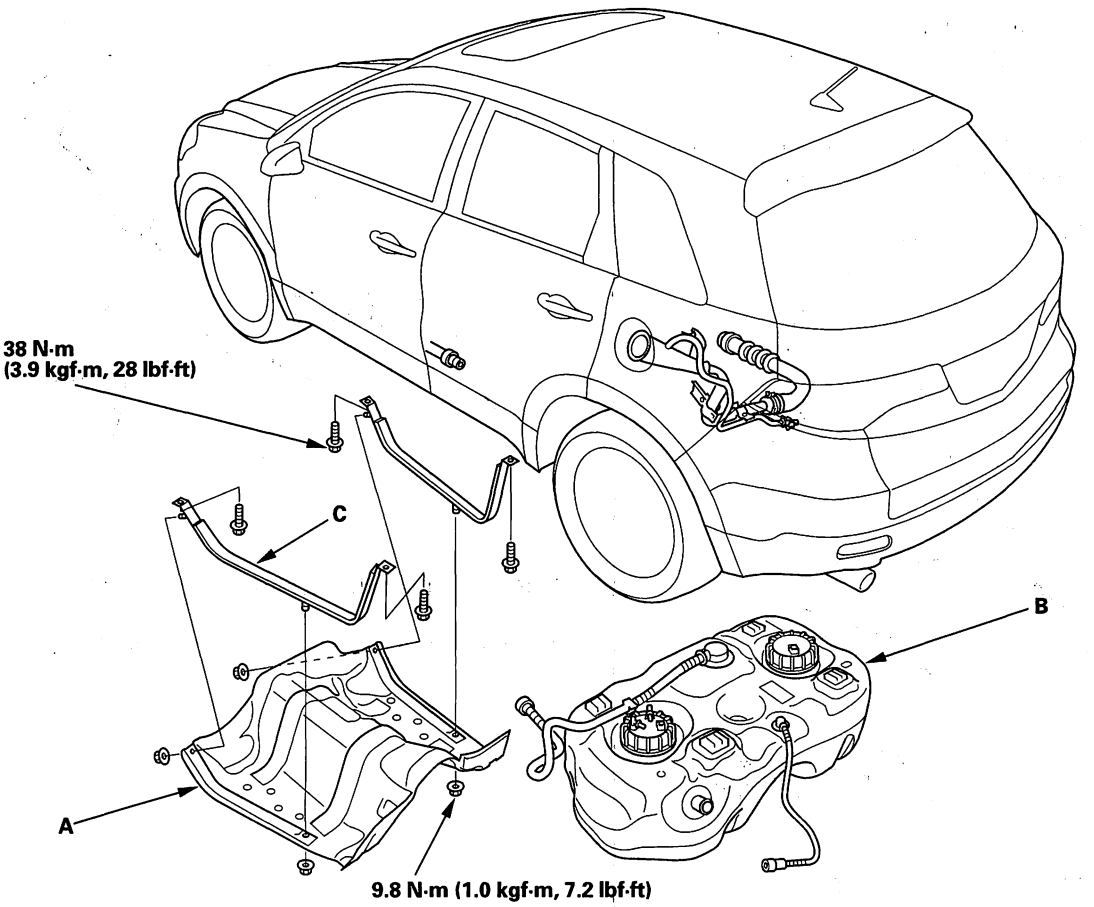


12. Place a jack or support under the fuel tank (B).
13. Remove the strap bolts and straps (C).
14. Remove the fuel tank.
15. Install the parts in the reverse order of removal.



BACK

Protected by AR

## Fuel Fill Pipe Removal/Installation

1. Drain the fuel tank (see page 11-367).

2. Remove the fuel fill cap.

3. Disconnect the fuel fill tube (A) from the fuel tank. Slide back the clamp, then twist the tube as you pull to avoid damage it.

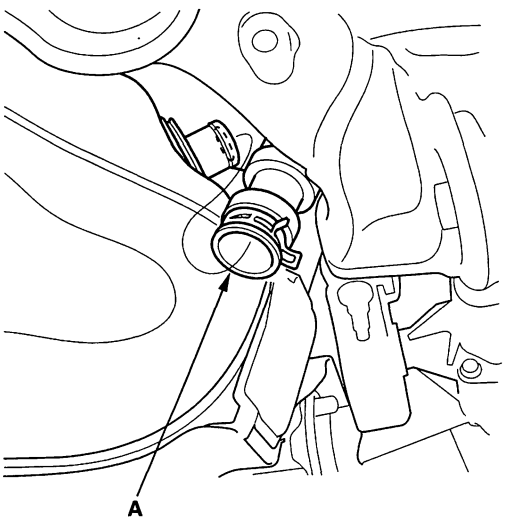


4. Remove the fuel fill pipe cover (A).

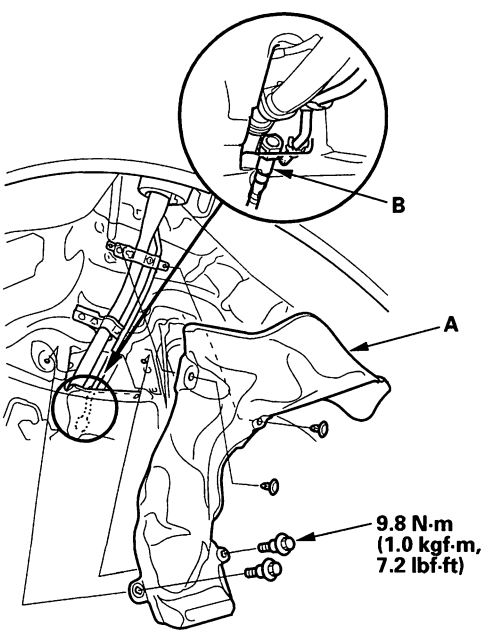


5. Disconnect the quick-connect fitting (B).

6. Remove the bolts (A), then remove the fuel fill pipe (B) and fuel fill tube (C).

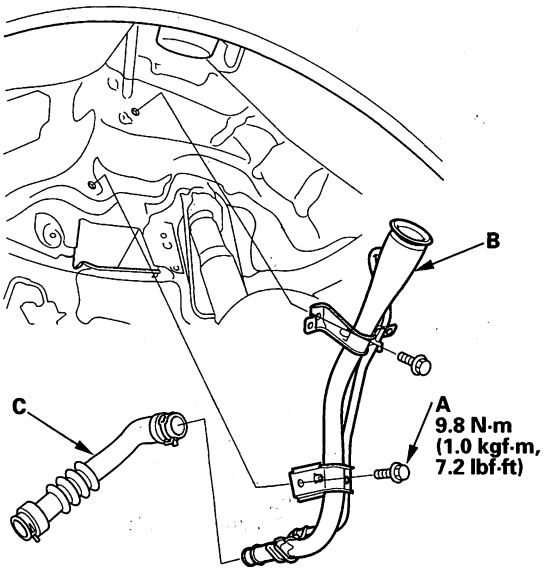


7. Install the parts in the reverse order of removal.

Protected by AR



## Fuel Pump Control Module Replacement

1. Fold the rear seat down, then remove the rear seat side bolster (see page 20-138).

2. Disconnect the fuel pump control module connector (A).

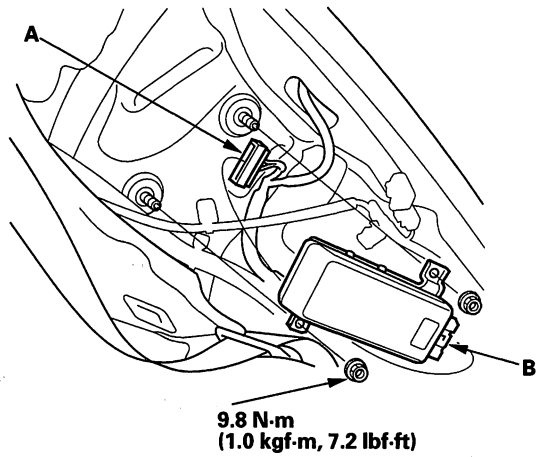


3. Remove the fuel pump control module (B).

4. Install the parts in the reverse order of removal.



BACK

Protected by AR

## Fuel Gauge Sending Unit Test

NOTE: For the fuel gauge system circuit diagram, refer to the Gauges Circuit Diagram (see page 22-262).

1. Check the No. 10 METER (7.5 A) fuse in the under-dash fuse/relay box before testing.

2. Check for body electrical system DTCs.

   - If no problem is found, go to step 3.
   - If DTC B1175 or B1176 is indicated, go to the indicated DTC's troubleshooting.

3. Turn the ignition switch OFF.

4. Fold the rear seat down, then remove the left cargo area side trim panel (see page 20-76).

5. Pull back the carpet to expose the access panel (see step 9 on page 20-91).

6. Remove the access panel (A) from the left side of the floor.

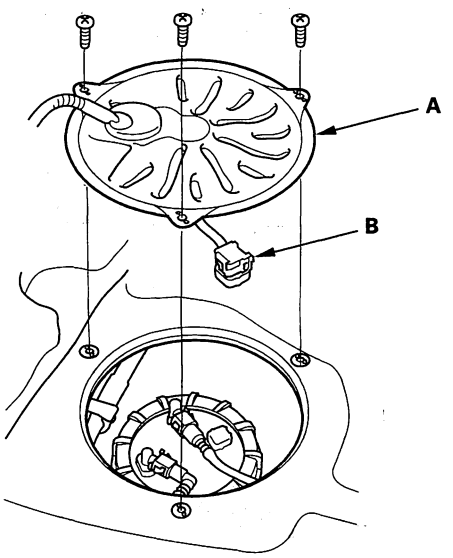


7. Disconnect the fuel tank unit 4P connector (B).

8. Remove the fuel tank unit from the fuel tank (see page 11-380).

   NOTE: If the fuel tank is full, drain the fuel (see page 11-367).

9. Measure resistance between the No. 1 and No. 3 terminals of the fuel tank unit 4P connector with the float at E (EMPTY), LOW (LOW FUEL INDICATOR), and F (FULL) positions.

   - If you do not get the following readings, replace the fuel gauge sending unit (see page 11-382).
   - If the fuel gauge sending unit test is OK, do the secondary fuel gauge sending unit test (see page 11-390).

| Float Position | F<br>5.7 in.<br>(144.0 mm) | LOW<br>3.7 in.<br>(93.7 mm) | E<br>2.2 in.<br>(54.8 mm) |
|---|---|---|---|
| Resistance (Ω) | 18 to<br>22 | 703.6 to<br>743 | 772 to<br>788 |

NOTE: Remove the No. 23 BACK UP (10 A) fuse from the under-hood fuse/relay box for at least 30 seconds after completing troubleshooting, otherwise it may take up to 20 minutes for the fuel gauge to indicate the correct fuel level.

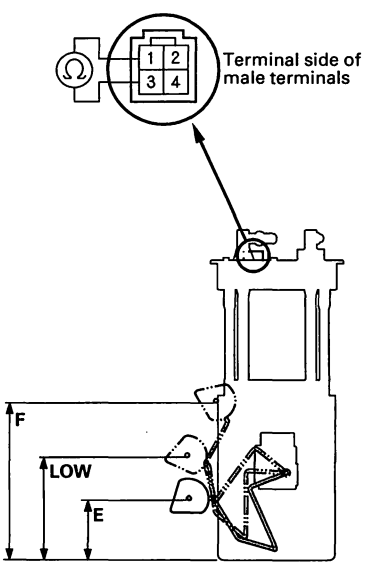

Protected by AR



## Secondary Fuel Gauge Sending Unit Test

1. Fold the rear seat down, then remove the right cargo area side trim panel (see page 20-76).

2. Pull back the carpet to expose the access panel (see step 9 on page 20-91).

3. Remove the access panel (A) from the right side of the floor.

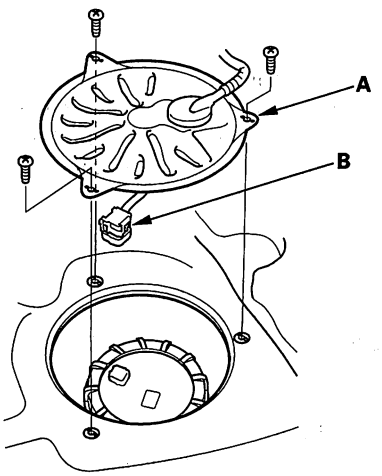


4. Disconnect the secondary fuel gauge sending unit 4P connector (B).

5. Remove the secondary fuel gauge sending unit from the fuel tank (see page 11-383).

6. Measure resistance between the No. 1 and No. 3 terminals of the secondary fuel gauge sending unit 4P connector with the float at E (EMPTY), 1/2 (HALF FULL), and F (FULL) positions.

| Float Position | F<br>9.2 in.<br>(233.8 mm) | 1/2<br>5.4 in.<br>(136.8 mm) | E<br>0.5 in.<br>(13.7 mm) |
|---|---|---|---|
| Resistance (Ω) | 18 to<br>22 | 402 to<br>414 | 772 to<br>788 |

NOTE: Remove the No. 23 BACK UP (10 A) fuse from the under-hood fuse/relay box for at least 10 seconds after completing troubleshooting, otherwise it may take up to 20 minutes for the fuel gauge to indicate the correct fuel level.

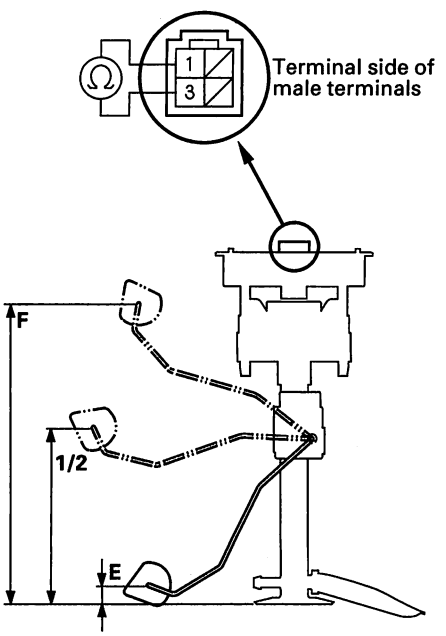




BACK

Protected by AR

## Low Fuel Indicator Test

1. Do the gauge self-diagnostic test (see page 22-258).

   - If the low fuel indicator flashes, go to step 2.
   - If the low fuel indicator does not flash, replace the gauge control module (see page 22-284).

2. Check for body electrical system DTCs.

   - If any DTCs are indicated, do the indicated DTC's troubleshooting.
   - If no DTCs are indicated, go to step 3.

3. Do the fuel gauge sending unit test (see page 11-389), and secondary fuel gauge sending unit test (see page 11-390),

Protected by AR



## Component Location Index

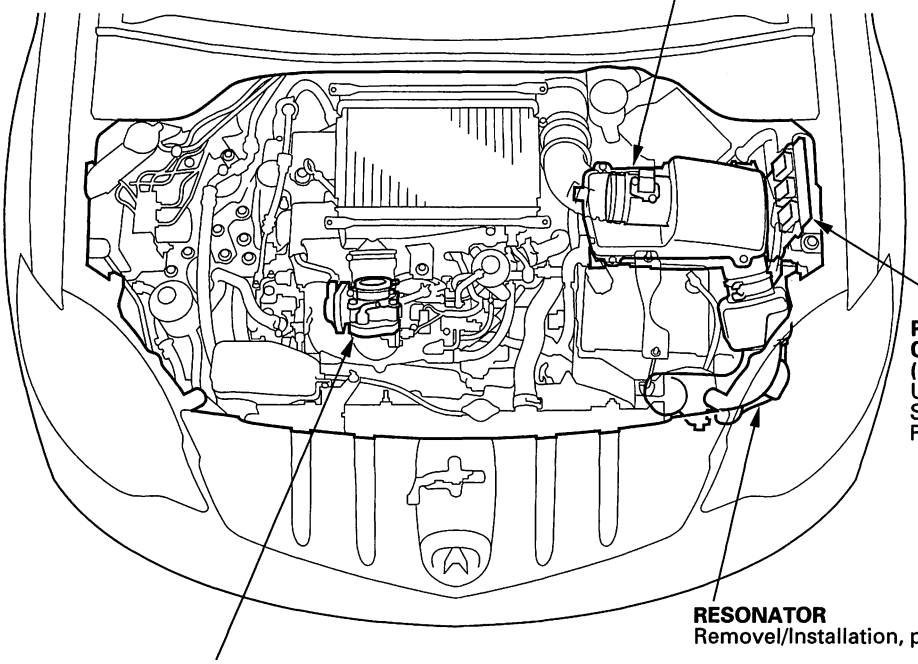

**AIR CLEANER**
Removel/Installation, page 11-394
Element Inspection/Replacement, page 11-395

**POWERTRAIN CONTROL MODULE (PCM)**
Update, page 11-7
Substitution, page 11-8
Replacement, page 11-252

**RESONATOR**
Removel/Installation, page 11-395

**THROTTLE BODY**
Test, page 11-393
Cleaning, page 11-394
Removal/Installation, page 11-396



BACK

Protected by AR

# Throttle Body Test

## Carbon Accumulation Check

NOTE: If the malfunction indicator lamp (MIL) has been reported on, check for diagnostic trouble codes (DTCs).

1. Connect the HDS to the data link connector (DLC) (A) located under the driver's side of the dashboard.

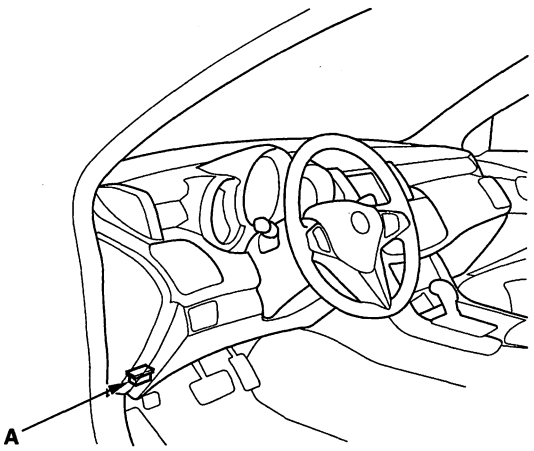


2. Turn the ignition switch ON (II).
3. Make sure the HDS communicates with the PCM. If it doesn't, go to the DLC circuit troubleshooting (see page 11-229).
4. Start the engine. Hold the engine speed at 3,000 rpm without load (in Park or neutral) until the radiator fan comes on, then let it idle.
5. Check the REL TP SENSOR in the DATA LIST with the HDS. The reading should be below 2.46 deg. If it is not, clean the throttle body (see page 11-394).

## Throttle Position Learning Check

NOTE: If the malfunction indicator lamp (MIL) has been reported on, check for diagnostic trouble codes (DTCs).

1. Connect the HDS to the data link connector (DLC) (A) located under the driver's side of the dashboard.

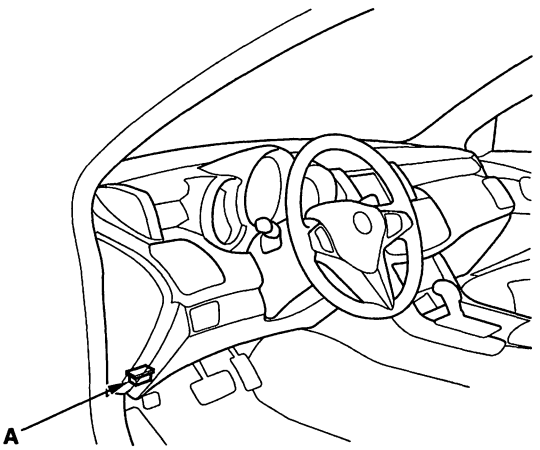


2. Turn the ignition switch ON (II).
3. Make sure the HDS communicates with the PCM. If it doesn't, go to the DLC circuit troubleshooting (see page 11-229).
4. Select the INSPECTION MENU with the HDS.
5. Do the TP POSITION CHECK in the ETCS TEST. If needed, clean the throttle body (see page 11-394).

Protected by AR



## Throttle Body Cleaning

**⚠CAUTION**

Do not insert your fingers into the installed throttle body when you turn the ignition switch ON (II) or while the ignition switch is ON (II). If you do, you will seriously injure your fingers if the throttle valve is activated.

1. Check for damage to the air cleaner. If the air cleaner is damaged, replace it (see page 11-395).
2. Remove the throttle body (see page 11-396).
3. Clean off the carbon from the throttle valve and inside the throttle body with a paper towel soaked in throttle plate and induction cleaner.

   NOTE:
   - Remove the throttle body to clean it.
   - Be careful not to pinch your fingers.
   - To avoid removing the molybdenum coating, do not clean the bearing area of the throttle shaft (A).
   - Do not spray throttle plate and induction cleaner directly on the throttle body.
   - Use Honda genuine throttle plate and induction cleaner.

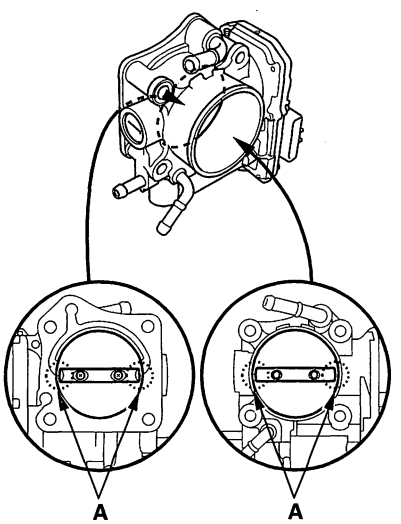


4. Install the throttle body (see page 11-396).
5. Reset the PCM with the HDS (see page 11-4).
6. Turn the ignition switch ON (II), and wait for 2 seconds.
7. Do the PCM idle learn procedure (see page 11-339).

## Air Cleaner Removal/Installation

1. Remove the battery upper bracket to avoid damaging the air cleaner.
2. Loosen the screw of the hose band (A).

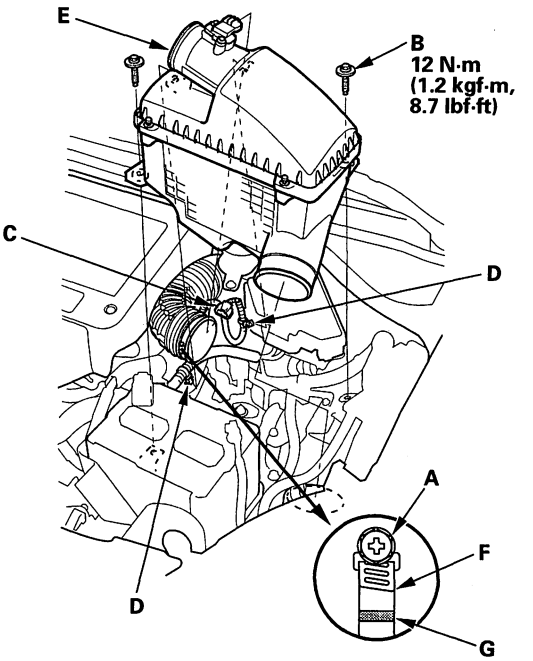


3. Remove the bolts (B).
4. Remove the MAF/IAT sensor connector (C) and harness clamps (D).
5. Remove the air cleaner (E).
6. Install the parts in the reverse order of removal.

   NOTE: Tigthen the hose band screw (A) until the edge of the hose band (F) goes over the paint mark (G) up to 11 mm.



BACK

Protected by AR

## Air Cleaner Element Inspection/ Replacement

1. Loosen the bolts (A), then open the air cleaner housing cover (B).

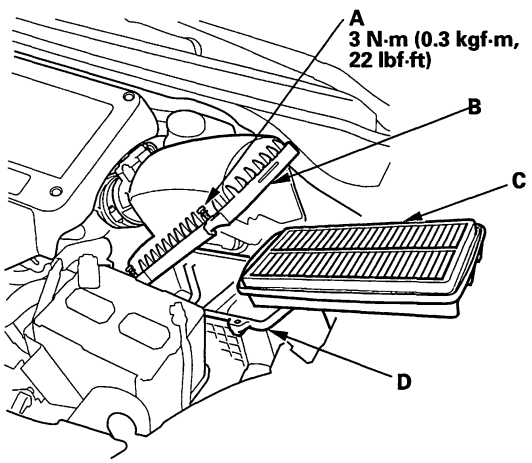


2. Remove the air cleaner element (C) from the air cleaner housing (D).

3. Check the air cleaner element for damage or clogging. If there is damage or clogging, replace the air cleaner element.

   NOTE: Do not use compressed air to clean the air cleaner element.

4. Install the parts in the reverse order of removal. Clean and remove any debris from inside the air cleaner housing.

5. If the maintenance minder indicated air cleaner replacement, reset the maintenance minder (see page 3-9), and this procedure is complete. If the maintenance minder did not indicated air cleaner replacement, go to step 6.

6. Select BODY ELECTRICAL with the HDS.

7. Select ADJUSTMENT in the GAUGES MENU with the HDS.

8. Select RESET in the MAINTENANCE MINDER with the HDS.

9. Select MAINTENANCE SUB ITEM 2 RESET with the HDS.

## Resonator Removal/Installation

1. Make sure you have anti-theft code for the audio system and the navigation system (if equipped).

2. Remove the battery and battery tray.

3. Remove the under-hood sub fuse/relay box (A) from the battery base.

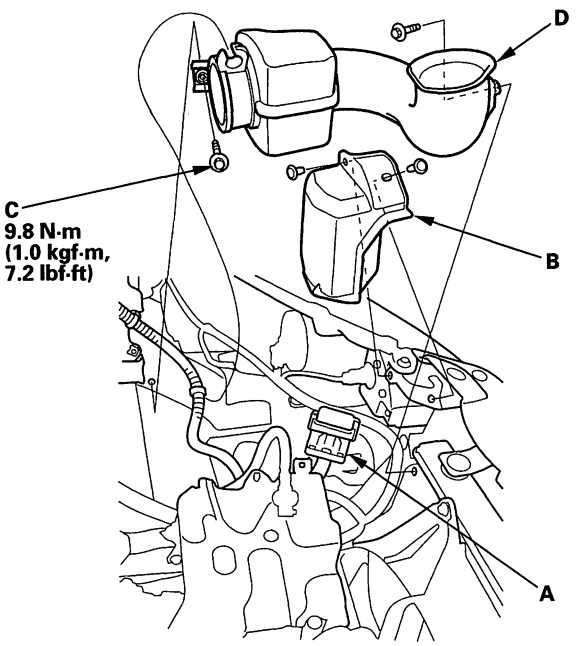


4. Remove the air intake cover (B).

5. Remove the bolts (C), then remove the resonator (D).

6. Install the parts in the reverse order of removal.

7. Reinstall the battery, and do the these items:

   - Enter the anti-theft code for the audio system and navigation system (if equipped).
   - Set the clock.

Protected by AR



## Throttle Body Removal/Installation

**⚠CAUTION**

Do not insert your fingers into the installed throttle body when you turn the ignition switch ON (II) or while the ignition switch is ON (II). If you do, there will be serious injury to your fingers if the throttle valve is activated.

NOTE: If you are replacing or cleaning the throttle body, start at step 1. If you are removing the throttle body, start at step 4.

1. USA, Canada models: Connect the HDS to the DLC while the engine is stopped.
2. USA, Canada models: Select the INSPECTION MENU on the HDS.
3. USA, Canada models: Do the TP POSITION CHECK in the ETCS TEST.
4. Remove the charge air cooler (see page 9-7), then remove the intake air duct (charge air cooler outlet tube) (A).

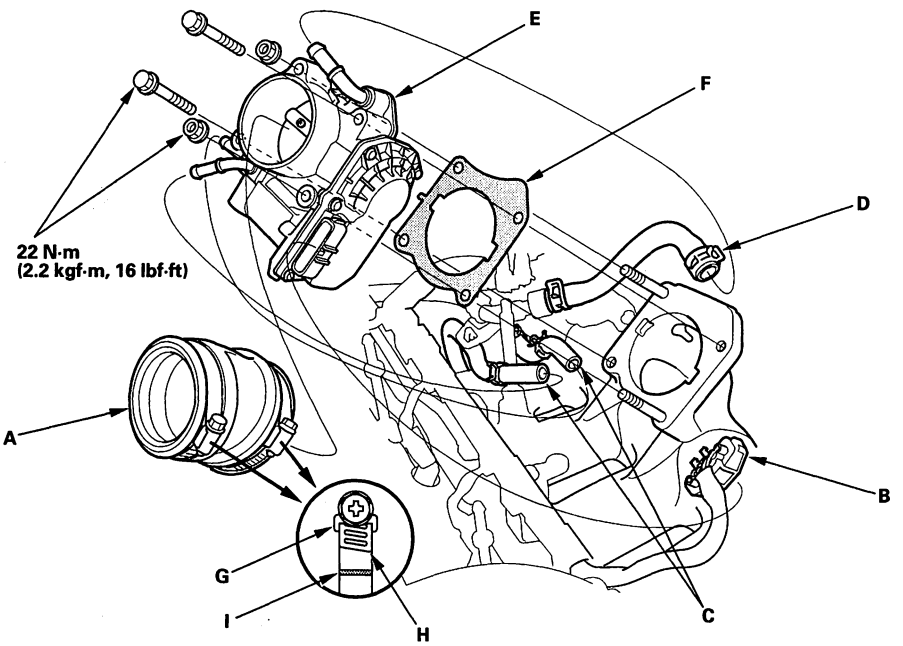


5. Disconnect the throttle body connector (B), the water bypass hoses (C), and the vacuum hose (D).

   NOTE: Plug the water bypass hoses after disconnecting them.

6. Remove the throttle body (E).
7. Install the parts in the reverse order of removal with a new gasket (F).

   NOTE: When torquing the screw of the hose band (G), align the edge of the hose band (H) with the mark (I) painted on the hose band. If you tighten the screw over the mark, replace the hose band.

8. Check these items.

   - Do the PCM idle learn procedure after replacing the throttle body (see page 11-339).
   - Refill the radiator with engine coolant (see page 10-7).



BACK

Protected by AR



## Component Location Index

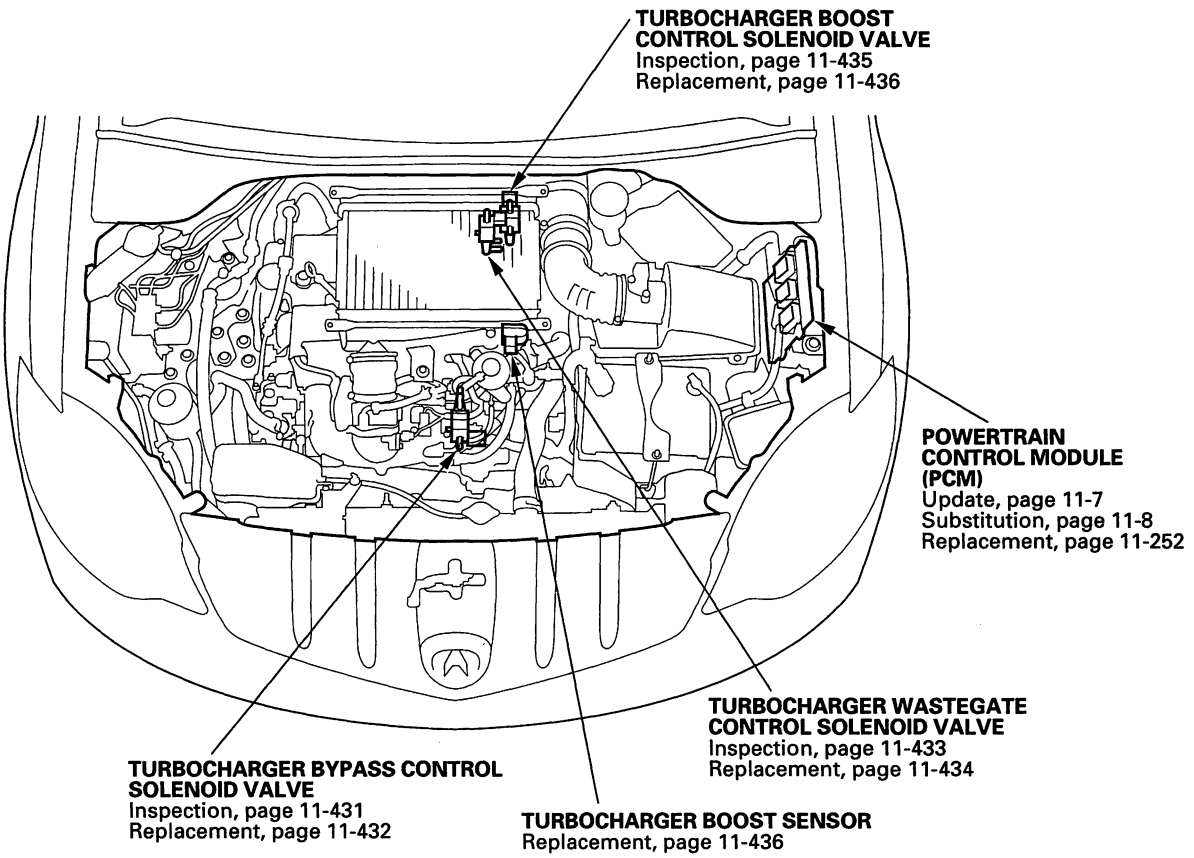

Protected by AR



## DTC Troubleshooting

### DTC P0034: Turbocharger Bypass Control Solenoid Valve Circuit Low Voltage

NOTE: Before you troubleshoot, record all freeze data and any on-board snapshot, and review the general troubleshooting information (see page 11-3).

1. Turn the ignition switch ON (II).
2. Clear the DTC with the HDS.
3. Select TURBOCHARGER BYPASS CONTROL SOLENOID VALVE ON in the INSPECTION MENU with the HDS.
4. Check for Temporary DTCs or DTCs with the HDS.

   *Is DTC P0034 indicated?*

   **YES**—Go to step 5.

   **NO**—Intermittent failure, the system is OK at this time. Check for poor connections or loose terminals at the turbocharger bypass control solenoid valve and the PCM. ■
5. Turn the ignition switch OFF.
6. Disconnect the turbocharger bypass control solenoid valve 2P connector.
7. At the solenoid side, measure resistance between turbocharger bypass control solenoid valve 2P connector terminals No.1 and No.2.

**TURBOCHARGER BYPASS CONTROL SOLENOID VALVE 2P CONNECTOR**

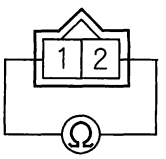


Terminal side of male terminals

*Is there 30.0 Ω – 34.0 Ω at room temperature?*

**YES**—Go to step 8.

**NO**—Go to step 16.

8. Check the No. 3 IG1 ACG (15 A) fuse in the under-dash fuse/relay box.

   *Is the fuse OK?*

   **YES**—Go to step 9.

   **NO**—Repair short in the wire between the turbocharger bypass control solenoid valve and the fuse. Also replace the blown fuse, then go to step 17.



BACK

Protected by AR

9. Turn the ignition switch ON (II).

10. Measure voltage between turbocharger bypass control solenoid valve 2P connector terminal No. 1 and body ground.

**TURBOCHARGER BYPASS CONTROL SOLENOID VALVE 2P CONNECTOR**

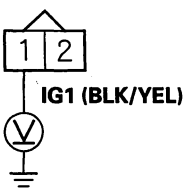


Wire side of female terminals

*Is there battery voltage?*

**YES**—Go to step 11.

**NO**—Repair open in the wire between the turbocharger bypass control solenoid valve and No. 3 IG1 ACG fuse, then go to step 17.

11. Turn the ignition switch OFF.

12. Jump the SCS line with the HDS.

13. Disconnect PCM connector C (44P).

14. Check for continuity between PCM connector terminal C25 and body ground.

**PCM CONNECTOR C (44P)**

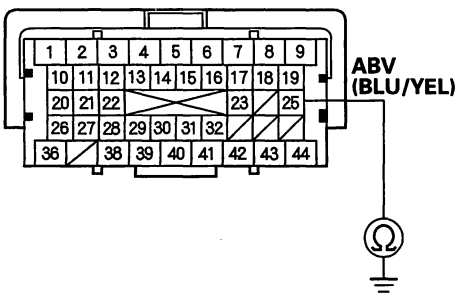


Terminal side of female terminals

*Is there continuity?*

**YES**—Repair short in the wire between the PCM (C25) and turbocharger bypass control solenoid valve, then go to step 17.

**NO**—Go to step 15.

(cont'd)

Protected by AR



## DTC Troubleshooting (cont'd)

15. Check for continuity between turbocharger bypass control solenoid valve 2P connector terminal No. 2 and PCM connector terminal C25.

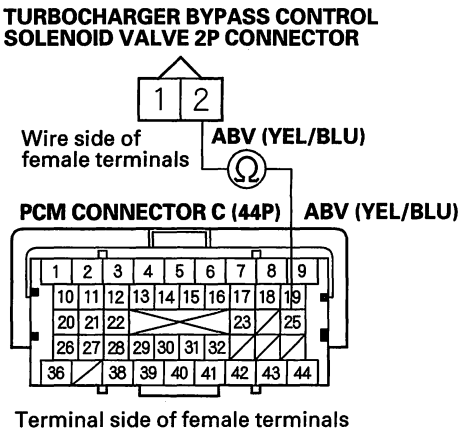


*Is there continuity?*

**YES**—Go to step 24.

**NO**—Repair open in the wire between the PCM (C25) and turbocharger bypass control solenoid valve, then go to step 17.

16. Replace the turbocharger bypass control solenoid valve (see page 11-432).

17. Reconnect all connectors.

18. Turn the ignition switch ON (II).

19. Reset the PCM with the HDS.

20. Do the PCM idle learn procedure (see page 11-339).

21. Select TURBOCHARGER BYPASS CONTROL SOLENOID VALVE ON in the INSPECTION MENU with the HDS.

22. Check for Temporary DTCs or DTCs with the HDS.

*Is DTC P0034 indicated?*

**YES**—Check for poor connections or loose terminals at the turbocharger bypass control solenoid valve and the PCM, then go to step 1.

**NO**—Go to step 23.

23. Monitor the OBD STATUS for DTC P0034 in the DTCs MENU with the HDS.

*Does the screen indicate PASSED?*

**YES**—Troubleshooting is complete. If any other Temporary DTCs or DTCs were indicated in step 22, go to the indicated DTC's troubleshooting. ■

**NO**—If the screen indicates FAILED, check for poor connections or loose terminals at the turbocharger bypass control solenoid valve and the PCM, then go to step 1. If the screen indicates NOT COMPLETED, go to step 21.



BACK

Protected by AR

24. Reconnect all connectors.

25. Update the PCM if it does not have the latest software (see page 11-7), or substitute a known-good PCM (see page 11-8).

26. Select TURBOCHARGER BYPASS CONTROL SOLENOID VALVE ON in the INSPECTION MENU with the HDS.

27. Check for Temporary DTCs or DTCs with the HDS.

    *Is DTC P0034 indicated?*

    **YES**—Check for poor connections or loose terminals at the turbocharger bypass control solenoid valve and the PCM. If the PCM was updated, substitute a known-good PCM (see page 11-8), then go to step 26. If the PCM was substituted, go to step 1.

    **NO**—Go to step 28.

28. Monitor the OBD STATUS for DTC P0034 in the DTCs MENU with the HDS.

    *Does the screen indicate PASSED?*

    **YES**—If the PCM was updated, troubleshooting is complete. If the PCM was substituted, replace the original PCM (see page 11-252). If any other Temporary DTCs or DTCs were indicated in step 27, go to the indicated DTC's troubleshooting. ■

    **NO**—If the screen indicates FAILED, check for poor connections or loose terminals at the turbocharger bypass control solenoid valve and the PCM. If the PCM was updated, substitute a known-good PCM (see page 11-8), then go to step 26. If the PCM was substituted, go to step 1. If the screen indicates NOT COMPLETED, go to step 26.

Protected by AR



## DTC Troubleshooting (cont'd)

### **DTC P0035:** Turbocharger Bypass Control Solenoid Valve Circuit High Voltage

NOTE: Before you troubleshoot, record all freeze data and any on-board snapshot, and review the general troubleshooting information (see page 11-3).

1. Turn the ignition switch ON (II).

2. Clear the DTC with the HDS.

3. Select TURBOCHARGER BYPASS CONTROL SOLENOID VALVE ON in the INSPECTION MENU with the HDS.

4. Check for Temporary DTCs or DTCs with the HDS.

   *Is DTC P0035 indicated?*

   **YES**—Go to step 6.

   **NO**—Go to step 5.

5. Monitor the OBD STATUS for P0035 in the DTC MENU with the HDS.

   *Does the screen indicate PASSED?*

   **YES**—Intermittent failure, the system is OK at this time. Check for poor connections or loose terminals at the turbocharger bypass control valve and the PCM. ■

   **NO**—If the screen indicate FAILED, go to step 6. If the screen indicate NOT COMPLETED, go to step 3 and recheck.

6. Update the PCM if it does not have the latest software (see page 11-7), or substitute a known-good PCM (see page 11-8).

7. Select the TURBOCHARGER BYPASS CONTROL SOLENOID VALVE ON in the INSPECTION MENU with the HDS.

8. Check for Temporary DTCs or DTCs with the HDS.

   *Is DTC P0035 indicated?*

   **YES**—Check for poor connections or loose terminals at the turbocharger bypass control solenoid valve and the PCM. If the PCM was updated, substitute a known-good PCM (see page 11-8), then recheck. If the PCM was substituted, go to step 1.

   **NO**—Go to step 9.

9. Monitor the OBD STATUS for P0035 in the DTC MENU with the HDS.

   *Does the screen indicate PASSED?*

   **YES**—If the PCM was updated, troubleshooting is complete. If the PCM was substituted, replace the original PCM (see page 11-252). If any other Temporary DTCs or DTCs were indicated in step 8, go to the indicated DTC's troubleshooting. ■

   **NO**—If the screen indicates FAILED, check for poor connections or loose terminals at the turbocharger bypass control solenoid valve and the PCM. If the PCM was updated, substitute a known-good PCM (see page 11-8), then recheck. If the PCM was substituted, go to step 1. If the screen indicates NOT COMPLETED, go to step 7.



BACK

Protected by AR

## **DTC P0045:** Turbocharger Boost Control Solenoid Valve Circuit Malfunction

NOTE: Before you troubleshoot, record all freeze data and any on-board snapshot, and review the general troubleshooting information (see page 11-3).

1. Turn the ignition switch ON (II).

2. Clear the DTC with the HDS.

3. Start the engine. Hold the engine speed at 3,000 rpm without load (in Park or neutral) until the radiator fan comes on, then let it idle.

4. Test-drive under these conditions:

   - ECT SENSOR 1 above 158 °F (70 °C)
   - Transmission in D position
   - Engine speed above 3,800 rpm
   - REL TP SENSOR above 59 deg
   - Drive at least 2 seconds

5. Check for Temporary DTCs or DTCs with the HDS.

   *Is DTC P0045 indicated?*

   **YES**—Go to step 6.

   **NO**—Intermittent failure, the system is OK at this time. Check for poor connections or loose terminals at the turbocharger boost control solenoid valve and the PCM. ■

6. Turn the ignition switch OFF.

7. Disconnect the turbocharger boost control solenoid valve 2P connector.

8. At the solenoid side, measure resistance between turbocharger boost control solenoid valve 2P connector terminals No. 1 and No. 2.

**TURBOCHARGER BOOST CONTROL SOLENOID VALVE 2P CONNECTOR**

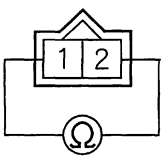


Terminal side of male terminals

*Is there 22.0 Ω – 26.0 Ω at room temperature?*

**YES**—Go to step 9.

**NO**—Go to step 17.

9. Check the No. 3 IG1 ACG (15 A) fuse in the under-dash fuse/relay box.

   *Is the fuse OK?*

   **YES**—Go to step 10.

   **NO**—Repair short in the wire between the turbocharger boost control solenoid valve and No. 3 IG1 ACG (15 A) fuse. Also replace the blown fuse, then go to step 18.

(cont'd)

Protected by AR



## DTC Troubleshooting (cont'd)

10. Turn the ignition switch ON (II).

11. Measure voltage between turbocharger boost control solenoid valve 2P connector terminal No. 1 and body ground.

**TURBOCHARGER BOOST CONTROL SOLENOID VALVE 2P CONNECTOR**

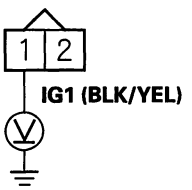


Wire side of female terminals

*Is there battery voltage?*

**YES**—Go to step 12.

**NO**—Repair open in the wire between the turbocharger boost control solenoid valve and No. 3 IG1 ACG fuse, then go to step 18.

12. Turn the ignition switch OFF.

13. Jump the SCS line with the HDS.

14. Disconnect the PCM connector C (44P).

15. Check for continuity between PCM connector terminal C26 and body ground.

**PCM CONNECTOR C (44P)**

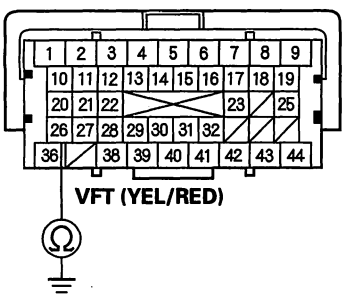


Terminal side of female terminals

*Is there continuity?*

**YES**—Repair short in the wire between PCM (C26) and turbocharger boost control solenoid valve, then go to step 18.

**NO**—Go to step 16.



BACK

Protected by AR

16. Check for continuity between turbocharger boost control solenoid valve 2P connector terminal No. 2 and PCM connector terminal C26.

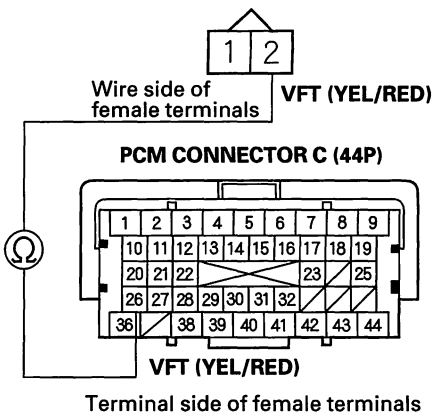


*Is there continuity?*

**YES**—Go to step 26.

**NO**—Repair open in the wire between the PCM (C26) and turbocharger boost control solenoid valve, then go to step 18.

17. Replace the turbocharger boost control solenoid valve (see page 11-436).

18. Reconnect all connectors.

19. Turn the ignition switch ON (II).

20. Reset the PCM with the HDS.

21. Do the PCM idle learn procedure (see page 11-339).

22. Start the engine. Hold the engine speed at 3,000 rpm without load (in Park or neutral) until the radiator fan comes on, then let it idle.

23. Test-drive under these conditions:

- ECT SENSOR 1 above 158 °F (70 °C)
- Transmission in D position
- Engine speed above 3,800 rpm
- REL TP SENSOR above 59 deg
- Drive at least 2 seconds

24. Check for Temporary DTCs or DTCs with the HDS.

*Is DTC P0045 indicated?*

**YES**—Check for poor connections or loose terminals at the turbocharger boost control solenoid valve and the PCM, then go to step 1.

**NO**—Go to step 25.

25. Monitor the OBD STATUS for DTC P0045 in the DTCs MENU with the HDS.

*Does the screen indicate PASSED?*

**YES**—Troubleshooting is complete. If any other Temporary DTCs or DTCs were indicated in step 24, go to the indicated DTC's troubleshooting.■

**NO**—If the screen indicates FAILED, check for poor connections or loose terminals at the turbocharger boost control solenoid valve and the PCM, then go to step 1. If the screen indicates EXECUTING, keep driving until a result comes on. If the screen indicates OUT OF CONDITION, go to step 22.

(cont'd)

Protected by AR



## DTC Troubleshooting (cont'd)

26. Reconnect all connectors.

27. Update the PCM if it does not have the latest software (see page 11-7), or substitute a known-good PCM (see page 11-8).

28. Start the engine. Hold the engine speed at 3,000 rpm without load (in Park or neutral) until the radiator fan comes on, then let it idle.

29. Test-drive under these conditions:

    - ECT SENSOR 1 above 158 °F (70 °C)
    - Transmission in D position
    - Engine speed above 3,800 rpm
    - REL TP SENSOR above 59 deg
    - Drive at least 2 seconds

30. Check for Temporary DTCs or DTCs with the HDS.

    *Is DTC P0045 indicated?*

    **YES**—Check for poor connections or loose terminals at the turbocharger boost control solenoid valve and the PCM. If the PCM was updated, substitute a known-good PCM (see page 11-8), then go to step 28. If the PCM was substituted, go to step 1.

    **NO**—Go to step 31.

31. Monitor the OBD STATUS for DTC P0045 in the DTCs MENU with the HDS.

    *Does the screen indicate PASSED?*

    **YES**—If the PCM was updated, troubleshooting is complete. If the PCM was substituted, replace the original PCM (see page 11-252). If any other Temporary DTCs or DTCs were indicated in step 30, go to the indicated DTC's troubleshooting.■

    **NO**—If the screen indicates FAILED, check for poor connections or loose terminals at the turbocharger boost control solenoid valve and the PCM. If the PCM was updated, substitute a known good PCM (see page 11-8), then go to step 28. If PCM was substituted, go to step 1. If the screen indicates EXECUTING, keep driving until a result comes on. If the screen indicates OUT OF CONDITION, go to step 28.



BACK

Protected by AR

## **DTC P0234:** Turbocharger Overboost Problem

NOTE:
- Before you troubleshoot, record all freeze data and any on-board snapshot, and review the general troubleshooting information (see page 11-3).
- If any of the DTCs listed below are indicated at the same time as DTC P0234, troubleshoot those DTCs first, then recheck for P0234.
  P0107, P0108, P1128, P1129: Manifold absolute pressure (MAP) sensor.
  P0236, P0237, P0238: Turbocharger boost sensor.

1. Turn the ignition switch ON (II).

2. Clear the DTC with the HDS.

3. Select the TURBOCHARGER WASTEGATE CONTROL SYSTEM TEST in the INSPECTION MENU with the HDS.

   *Is the result OK?*

   **YES**—Intermittent failure, the system is OK at this time.■

   **NO**—Go to step 4.

4. Select TURBOCHARGER WASTEGATE CONTROL SOLENOID VALVE ON in the INSPECTION MENU with the HDS.

   *Do you hear the solenoid operating?*

   **YES**—Go to step 5.

   **NO**—Replace the turbocharger wastegate control solenoid valve (see page 11-434), then go to step 10.

5. Turn the ignition switch OFF.

6. Remove the charge air cooler (see page 9-7).

7. Check for poor connections, blockage, or damage at these parts:

   - Hose (A) between the turbocharger wastegate control solenoid valve and the turbocharger wastegate control actuator
   - Hoses (B) and pipe (C) between the turbocharger wastegate control solenoid valve and turbocharger
   - Turbocharger port (D)

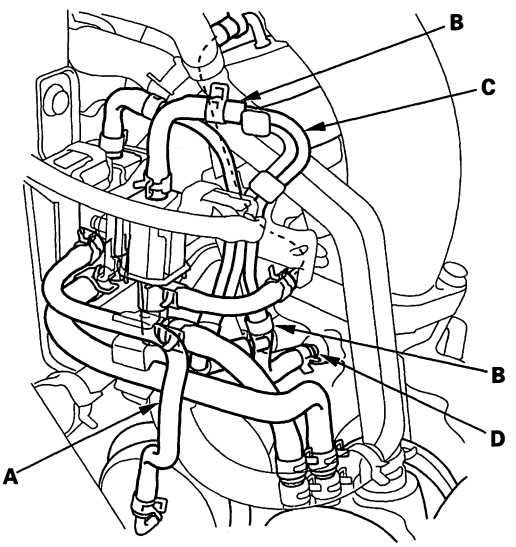


*: This view is from the rear of the engine compartment.

*Are the parts OK?*

**YES**—Go to step 8.

**NO**—Repair or replace any damaged parts, then go to step 9.

(cont'd)

Protected by AR



## DTC Troubleshooting (cont'd)

8. Inspect the turbocharger wastegate control solenoid valve (see page 11-433).

   *Is the solenoid valve OK?*

   **YES**—Check the turbocharger (see page 9-11) and turbocharger wastegate control actuator (see page 9-11), make any necessary repairs, then go to step 9.

   **NO**—Replace the turbocharger wastegate control solenoid valve (see page 11-434), then go to step 9.

9. Reinstall the charge air cooler (see page 9-9).

10. Turn the ignition switch ON (II).

11. Reset the PCM with the HDS.

12. Do the PCM idle learn procedure (see page 11-339).

13. Start the engine. Hold the engine speed at 3,000 rpm without load (in Park or neutral) until the radiator fan comes on, then let it idle.

14. Test-drive under these conditions:

    - ECT SENSOR 1 above 158 °F (70 °C)
    - Transmission in D position
    - Engine speed above 3,800 rpm
    - REL TP SENSOR above 59 deg
    - Drive at least 2 seconds

15. Check for Temporary DTCs or DTCs with the HDS.

    *Is DTC P0234 indicated?*

    **YES**—Make sure the turbocharger wastegate control solenoid valve, connecting hose, and port are OK, then go to step 1.

    **NO**—Troubleshooting is complete. If any other Temporary DTCs or DTCs are indicated, go to the indicated DTC's troubleshooting. ■



BACK

Protected by AR

## **DTC P0236:** Turbocharger Boost Sensor Circuit Range/Performance Problem

NOTE: Before you troubleshoot, record all freeze data and any on-board snapshot, and review the general troubleshooting information (see page 11-3).

1. Turn the ignition switch ON (II).

2. Check the TURBOCHARGER BOOST SENSOR and the BARO SENSOR in the DATA LIST with the HDS.

   *Is the difference in value between the sensors 26.7 kPa (7.9 in Hg, 200 mmHg) or more?*

   **YES**—Go to step 9.

   **NO**—Go to step 3.

3. Note the value of TURBOCHARGER BOOST SENSOR in the DATA LIST with the HDS.

4. Start the engine. Hold the engine speed at 3,000 rpm without load (in Park or neutral) until the radiator fan comes on, then let it idle.

5. Hold the engine speed at 4,500 rpm without load.

6. Check the TURBOCHARGER BOOST SENSOR in the DATA LIST with the HDS.

   *Does the TURBOCHARGER BOOST SENSOR change 0.67 kPa (0.2 in Hg, 5 mmHg) or more?*

   **YES**—Go to step 7.

   **NO**—Go to step 9.

7. Test-drive the vehicle for several minutes in the range of recorded freeze data parameters:

   - ENGINE SPEED
   - VSS
   - REL TP SENSOR
   - CLV (calculated load value)
   - APP SENSOR

8. Monitor the OBD STATUS for DTC P0236 in the DTCs MENU with the HDS.

   *Does the screen indicate FAILED?*

   **YES**—Go to step 9.

   **NO**—If the screen indicates PASSED, intermittent failure, the system is OK at this time. Check for poor connections or loose terminals at the turbocharger boost pressure sensor and the PCM. If the screen indicates EXECUTING, keep driving until a result come on. If the screen indicates OUT OF CONDITION, go to step 4.

9. Replace the turbocharger boost sensor (see page 11-436).

10. Reset the PCM with the HDS.

11. Do the PCM idle learn procedure (see page 11-339).

12. Start the engine. Hold the engine speed at 3,000 rpm without load (in Park or neutral) until the radiator fan comes on.

13. Test-drive the vehicle for several minutes in the range of recorded freeze data parameters:

    - ENGINE SPEED
    - VSS
    - REL TP SENSOR
    - CLV (calculated load value)
    - APP SENSOR

14. Check for Temporary DTCs or DTCs with the HDS.

    *Is DTC P0236 indicated?*

    **YES**—Check for poor connections or loose terminals at the turbocharger boost sensor and the PCM, then go to step 1.

    **NO**—Go to step 15.

(cont'd)

Protected by AR



## DTC Troubleshooting (cont'd)

15. Monitor the OBD STATUS for DTC P0236 in the DTCs MENU with the HDS.

    *Does the screen indicate PASSED?*

    **YES**—Troubleshooting is complete. If any other Temporary DTCs or DTCs were indicated in step 14, go to the indicated DTC's troubleshooting.■

    **NO**—If the screen indicates FAILED, check for poor connections or loose terminals at the turbocharger boost sensor and the PCM, then go to step 1. If the screen indicates EXECUTING, keep driving until a result comes on. If the screen indicates OUT OF CONDITION, go to step 12.



BACK

Protected by AR

## **DTC P0237:** Turbocharger Boost Sensor Circuit Low Voltage

NOTE: Before you troubleshoot, record all freeze data and any on-board snapshot, and review the general troubleshooting information (see page 11-3).

1. Turn the ignition switch ON (II).

2. Check the TURBOCHARGER BOOST SENSOR in the DATA LIST with the HDS.

   *Is about 3 kPa (1.0 in.Hg, 26 mmHg), or 0.23 V or less indicated?*

   **YES**—Go to step 3.

   **NO**—Intermittent failure, the system is OK at this time. Check for poor connections or loose terminals at the turbocharger boost sensor and the PCM. ■

3. Turn the ignition switch OFF.

4. Disconnect the turbocharger boost sensor 3P connector.

5. Turn the ignition switch ON (II).

6. Check the TURBOCHARGER BOOST SENSOR in the DATA LIST with the HDS.

   *Is about 3 kPa (1.0 in.Hg, 26 mmHg), or 0.23 V or less indicated?*

   **YES**—Go to step 12.

   **NO**—Go to step 7.

7. Measure voltage between turbocharger boost sensor 3P connector terminals No. 1 and No. 3.

**TURBOCHARGER BOOST SENSOR 3P CONNECTOR**

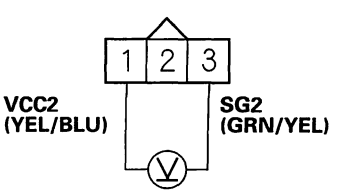


Wire side of female terminals

*Is there about 5 V?*

**YES**—Go to step 16.

**NO**—Go to step 8.

8. Turn the ignition switch OFF.

9. Jump the SCS line with the HDS.

10. Disconnect PCM connector C (44P).

11. Check for continuity between PCM connector terminal B18 and turbocharger boost sensor 3P connector terminal No. 1.

**TURBOCHARGER BOOST SENSOR 3P CONNECTOR**

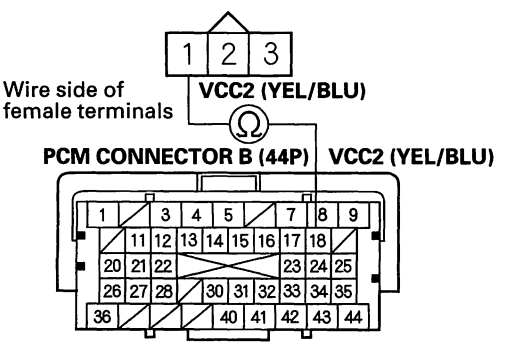


Terminal side of female terminals

*Is there continuity?*

**YES**—Go to step 23.

**NO**—Repair open in the wire between the PCM (B18) and the turbocharger boost sensor, then go to step 18.

(cont'd)

Protected by AR



## DTC Troubleshooting (cont'd)

12. Turn the ignition switch OFF.

13. Jump the SCS line with the HDS.

14. Disconnect PCM connector C (44P).

15. Check for continuity between turbocharger boost sensor 3P connector terminal No. 2 and body ground.

**TURBOCHARGER BOOST SENSOR 3P CONNECTOR**

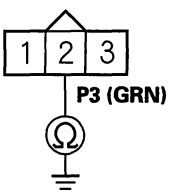


Wire side of female terminals

*Is there continuity?*

**YES**—Repair short in the wire between the PCM (C10) and the turbocharger boost sensor, then go to step 18.

**NO**—Go to step 23.

16. Turn the ignition switch OFF.

17. Replace the turbocharger boost sensor (see page 11-436).

18. Reconnect all connectors.

19. Turn the ignition switch ON (II).

20. Reset the PCM with the HDS.

21. Do the PCM idle learn procedure (see page 11-339).

22. Check for Temporary DTCs or DTCs with the HDS.

*Is DTC P0237 indicated?*

**YES**—Check for poor connections or loose terminals at the turbocharger boost sensor and the PCM, then go to step 1.

**NO**—Troubleshooting is complete. If any other Temporary DTCs or DTCs are indicated, go to the indicated DTC's troubleshooting. ■

23. Reconnect all connectors.

24. Update the PCM if it does not have the latest software (see page 11-7), or substitute a known-good PCM (see page 11-8).

25. Check for Temporary DTCs or DTCs with the HDS.

*Is DTC P0237 indicated?*

**YES**—Check for poor connections or loose terminals at the turbocharger boost sensor and the PCM. If the PCM was updated, substitute a known-good PCM (see page 11-8), then recheck. If the PCM was substituted, go to step 1.

**NO**—If the PCM was updated, troubleshooting is complete. If the PCM was substituted, replace the original PCM (see page 11-252). If any other Temporary DTCs or DTCs are indicated, go to the indicated DTC's troubleshooting. ■



BACK

Protected by AR

## DTC P0238: Turbocharger Boost Sensor Circuit High Voltage

NOTE: Before you troubleshoot, record all freeze data and any on-board snapshot, and review the general troubleshooting information (see page 11-3).

1. Turn the ignition switch ON (II).

2. Check the TURBOCHARGER BOOST SENSOR in the DATA LIST with the HDS.

   *Is about 160 kPa (47.1 in.Hg, 1,197 mmHg), or 4.49 V or more indicated?*

   **YES**—Go to step 3.

   **NO**—Intermittent failure, the system is OK at this time. Check for poor connections or loose terminals at the turbocharger boost sensor and the PCM. ■

3. Turn the ignition switch OFF.

4. Disconnect the turbocharger boost sensor 3P connector.

5. Connect turbocharger boost sensor 3P connector terminals No. 2 and No. 3 with a jumper wire.

**TURBOCHARGER BOOST SENSOR 3P CONNECTOR**

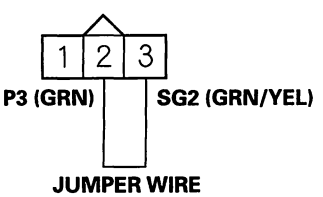


Wire side of female terminals

6. Turn the ignition switch ON (II).

7. Check the TURBO BOOST SENSOR in the DATA LIST with the HDS.

   *Is about 160 kPa (47.1 in.Hg, 1,197 mmHg), or 4.49 V or more indicated?*

   **YES**—Go to step 8.

   **NO**—Go to step 18.

8. Remove the jumper wire from the turbocharger boost sensor 3P connector.

9. Measure voltage between turbocharger boost sensor 3P connector terminals No. 1 and No. 3.

**TURBOCHARGER BOOST SENSOR 3P CONNECTOR**

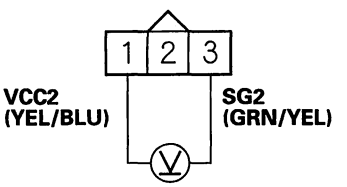


Wire side of female terminals

*Is there about 5 V?*

**YES**—Go to step 14.

**NO**—Go to step 10.

(cont'd)

Protected by AR



## DTC Troubleshooting (cont'd)

10. Turn the ignition switch OFF.
11. Jump the SCS line with the HDS.
12. Disconnect PCM connector B (44P).
13. Check for continuity between PCM connector terminal B33 and turbocharger boost sensor 3P connector terminal No. 3.

**TURBOCHARGER BOOST SENSOR 3P CONNECTOR**

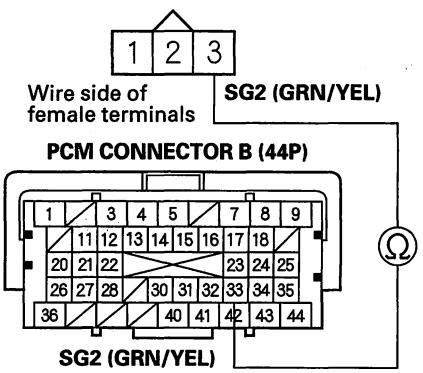


Terminal side of female terminals

*Is there continuity?*

**YES**—Go to step 25.

**NO**—Repair open in the wire between the PCM (B33) and the turbocharger boost sensor, then go to step 20.

14. Turn the ignition switch OFF.
15. Jump the SCS line with the HDS.
16. Disconnect PCM connector C (44P).
17. Check for continuity between PCM connector terminal C10 and turbocharger boost sensor 3P connector terminal No. 2.

**TURBOCHARGER BOOST SENSOR 3P CONNECTOR**

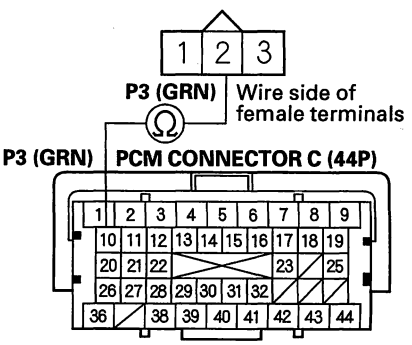


Terminal side of female terminals

*Is there continuity?*

**YES**—Go to step 25.

**NO**—Repair open in the wire between the PCM (C10) and the turbocharger boost sensor, then go to step 20.



BACK

Protected by AR

18. Turn the ignition switch OFF.

19. Replace the turbocharger boost sensor (see page 11-436).

20. Reconnect all connectors.

21. Turn the ignition switch ON (II).

22. Reset the PCM with the HDS.

23. Do the PCM idle learn procedure (see page 11-339).

24. Check for Temporary DTCs or DTCs with the HDS.

    *Is DTC P0238 indicated?*

    **YES**—Check for poor connections or loose terminals at the turbocharger boost sensor and the PCM, then go to step 1.

    **NO**—Troubleshooting is complete. If any other Temporary DTCs or DTCs are indicated, go to the indicated DTC's troubleshooting. ■

25. Reconnect all connectors.

26. Update the PCM if it does not have the latest software (see page 11-7), or substitute a known-good PCM (see page 11-8).

27. Check for Temporary DTCs or DTCs with the HDS.

    *Is DTC P0238 indicated?*

    **YES**—Check for poor connections or loose terminals at the turbocharger boost sensor and the PCM. If the PCM was updated, substitute a known-good PCM (see page 11-8), then recheck. If the PCM was substituted, go to step 1.

    **NO**—If the PCM was updated, troubleshooting is complete. If the PCM was substituted, replace the original PCM (see page 11-252). If any other Temporary DTCs or DTCs are indicated, go to the indicated DTC's troubleshooting. ■

Protected by AR



## DTC Troubleshooting (cont'd)

### DTC P0243: Turbocharger Wastegate Control Solenoid Valve Circuit Malfunction

NOTE: Before you troubleshoot, record all freeze data and any on-board snapshot, and review the general troubleshooting information (see page 11-3).

1. Turn the ignition switch ON (II).
2. Clear the DTC with the HDS.
3. Start the engine. Hold the engine speed at 3,000 rpm without load (in Park or neutral) until the radiator fan comes on, then let it idle.
4. Test-drive under these conditions:
   - ECT SENSOR 1 above 158 °F (70 °C)
   - Transmission in D position
   - Engine speed above 3,800 rpm
   - REL TP SENSOR above 59 deg
   - Drive at least 2 seconds
5. Check for Temporary DTCs or DTCs with the HDS.

   *Is DTC P0243 indicated?*

   **YES**—Go to step 6.

   **NO**—Intermittent failure, the system is OK at this time. Check for poor connections or loose terminals at the turbocharger wastegate control solenoid valve and the PCM. ■
6. Turn the ignition switch OFF.
7. Disconnect the turbocharger wastegate control solenoid valve 2P connector.
8. At the solenoid side, measure resistance between turbocharger wastegate control solenoid valve 2P connector terminals No. 1 and No. 2.

**TURBOCHARGER WASTEGATE CONTROL SOLENOID VALVE 2P CONNECTOR**

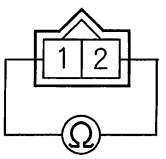


Terminal side of male terminals

*Is there 22.0—26.0 Ω at room temperature?*

**YES**—Go to step 9.

**NO**—Go to step 17.

9. Check the No. 3 IG1 ACG (15 A) fuse in the under-dash fuse/relay box.

   *Is the fuse OK?*

   **YES**—Go to step 10.

   **NO**—Repair short in the wire between the turbocharger wastegate control solenoid valve and No. 3 IG1 ACG (15 A) fuse. Also replace the blown fuse, then go to step 18.



BACK

Protected by AR

10. Turn the ignition switch ON (II).

11. Measure voltage between turbocharger wastegate control solenoid valve 2P connector terminal No. 1 and body ground.

**TURBOCHARGER WASTEGATE CONTROL SOLENOID VALVE 2P CONNECTOR**

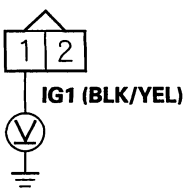


Wire side of female terminals

*Is there battery voltage?*

**YES**—Go to step 12.

**NO**—Repair open in the wire between the turbocharger wastegate control solenoid valve and No. 3 IG1 ACG (15 A) fuse, then go to step 18.

12. Turn the ignition switch OFF.

13. Jump the SCS line with the HDS.

14. Disconnect PCM connector C (44P).

15. Check for continuity between PCM connector terminal C19 and body ground.

**PCM CONNECTOR C (44P)**

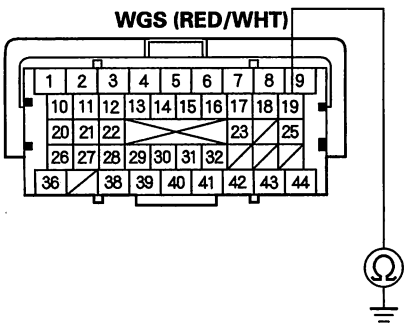


Terminal side of female terminals

*Is there continuity?*

**YES**—Repair short in the wire between the PCM (C19) and turbocharger wastegate control solenoid valve, then go to step 18.

**NO**—Go to step 16.

(cont'd)

Protected by AR



## DTC Troubleshooting (cont'd)

16. Check for continuity between turbocharger wastegate control solenoid valve 2P connector terminal No. 2 and PCM connector terminal C19.

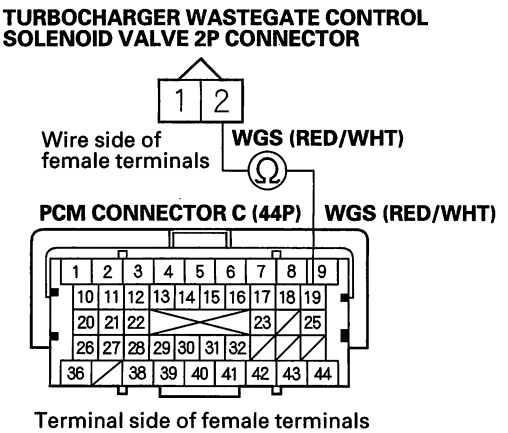


*Is there continuity?*

**YES**—Go to step 26.

**NO**—Repair open in the wire between the PCM (C19) and the turbocharger wastegate control solenoid valve, then go to step 18.

17. Replace the turbocharger wastegate control solenoid valve (see page 11-434).

18. Reconnect all connectors.

19. Turn the ignition switch ON (II).

20. Reset the PCM with the HDS.

21. Do the PCM idle learn procedure (see page 11-339).

22. Start the engine. Hold the engine speed at 3,000 rpm without load (in Park or neutral) until the radiator fan comes on, then let it idle.

23. Test-drive under these conditions:

- ECT SENSOR 1 above 158 °F (70 °C)
- Transmission in D position
- Engine speed above 3,800 rpm
- REL TP SENSOR above 59 deg
- Drive at least 2 seconds

24. Check for Temporary DTCs or DTCs with the HDS.

*Is DTC P0243 indicated?*

**YES**—Check for poor connections or loose terminals at the turbocharger wastegate control solenoid valve and the PCM, then go to step 1.

**NO**—Go to step 25.

25. Monitor the OBD STATUS for DTC P0243 in the DTCs MENU with the HDS.

*Does the screen indicate PASSED?*

**YES**—Troubleshooting is complete. If any other Temporary DTCs or DTCs were indicated in step 24, go to the indicated DTC's troubleshooting. ■

**NO**—If the screen indicates FAILED, check for poor connections or loose terminals at the turbocharger wastegate control solenoid valve and the PCM, then go to step 1. If the screen indicates EXECUTING, keep driving until a result comes on. If the screen indicates OUT OF CONDITION, go to step 22.



BACK

Protected by AR

26. Reconnect all connectors.

27. Update the PCM if it does not have the latest software (see page 11-7), or substitute a known-good PCM (see page 11-8).

28. Start the engine. Hold the engine speed at 3,000 rpm without load (in Park or neutral) until the radiator fan comes on, then let it idle.

29. Test-drive under these conditions:

    - ECT SENSOR 1 above 158 °F (70 °C)
    - Transmission in D position
    - Engine speed above 3,800 rpm
    - REL TP SENSOR above 59 deg
    - Drive at least 2 seconds

30. Check for Temporary DTCs or DTCs with the HDS.

    *Is DTC P0243 indicated?*

    **YES**—Check for poor connections or loose terminals at the turbocharger wastegate control solenoid valve and the PCM. If the PCM was updated, substitute a known-good PCM (see page 11-8), then go to step 28. If the PCM was substituted, go to step 1.

    **NO**—Go to step 31.

31. Monitor the OBD STATUS for DTC P0243 in the DTCs MENU with the HDS.

    *Does the screen indicate PASSED?*

    **YES**—If the PCM was updated, troubleshooting is complete. If the PCM was substituted, replace the original PCM (see page 11-252). If any other Temporary DTCs or DTCs were indicated in step 30, go to the indicated DTC's troubleshooting. ■

    **NO**—If the screen indicates FAILED, check for poor connections or loose terminals at the turbocharger wastegate control solenoid valve and the PCM. If the PCM was updated, substitute a known-good PCM (see page 11-8), then go to step 28. If the PCM was substituted, go to step 1. If the screen indicates EXECUTING, keep driving until a result comes on. If the screen indicates OUT OF CONDITION, go to step 28.

Protected by AR



## DTC Troubleshooting (cont'd)

### DTC P0299: Turbocharger Underboost Problem

NOTE: Before you troubleshoot, record all freeze data and any on-board snapshot, and review the general troubleshooting information (see page 11-3).

1. Inspect the air cleaner element (see page 11-395).

   *Is the air cleaner element clogged?*

   **YES**—Replace the air cleaner element (see page 11-395), then go to step 18.

   **NO**—Go to step 2.

2. Check for leak or damage at these parts.

   - Intake air duct (turbocharger outlet pipe)
   - Intake air duct (charge air cooler inlet hose)
   - Intake air duct (charge air cooler outlet tube)

   *Are the parts OK?*

   **YES**—Go to step 3.

   **NO**—Repair or replace the damaged parts, then go to step 18.

3. Turn the ignition switch ON (II).

4. Clear the DTC with the HDS.

5. Select the TURBOCHARGER BYPASS CONTROL SYSTEM TEST in the INSPECTION MENU with the HDS.

   *Is the result OK?*

   **YES**—Go to step 11.

   **NO**—Go to step 6.

6. Select TURBOCHARGER BYPASS CONTROL SOLENOID VALVE ON in the INSPECTION MENU with the HDS.

   *Do you hear the solenoid operating?*

   **YES**—Go to step 7.

   **NO**—Replace the turbocharger bypass control solenoid valve (see page 11-432), then go to step 18.

7. Turn the ignition switch OFF.

8. Remove the charge air cooler cover (see step 1 on page 9-8).

9. Check for poor connections, blockage, or damage at these parts.

   - Hose (A) between the turbocharger bypass control solenoid valve and the turbocharger bypass control valve
   - Hose (B) between the turbocharger bypass control solenoid valve and the turbocharger bypass control valve base
   - Turbocharger bypass control valve base port (C)

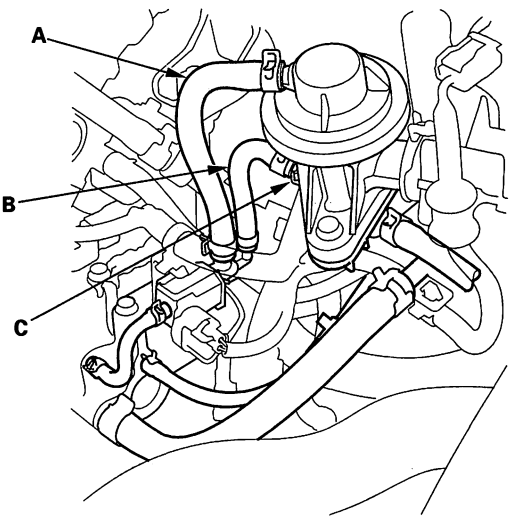


   *Are the parts OK?*

   **YES**—Go to step 10.

   **NO**—Repair or replace any damaged parts, then go to step 18.



BACK

Protected by AR

10. Inspect the turbocharger bypass control solenoid valve (see page 11-431).

    *Is the solenoid valve OK?*

    **YES**—Inspect the turbocharger bypass control valve (see page 9-10).

    **NO**—Replace the turbocharger bypass control solenoid valve (see page 11-432), then go to step 18.

11. Select the TURBOCHARGER WASTEGATE CONTROL SYSTEM TEST in the INSPECTION MENU with the HDS.

    *Is the result OK?*

    **YES**—Go to step 12.

    **NO**—Go to step 13.

12. Check for clogging or damaged in these parts:

    - Turbocharger (see page 9-11)
    - Warm up TWC (see page 11-440)
    - Under-floor TWC (see page 11-443)
    - Exhaust pipe (see page 9-23)

    *Are the parts OK?*

    **YES**—Intermittent failure, the system is OK at this time.■

    **NO**—Repair or replace any damaged parts, then go to step 18.

13. Select TURBOCHARGER WASTEGATE CONTROL SOLENOID VALVE ON in the INSPECTION MENU with the HDS.

    *Do you hear the solenoid operating?*

    **YES**—Go to step 14.

    **NO**—Replace the turbocharger wastegate control solenoid valve (see page 11-434), then go to step 18.

14. Turn the ignition switch OFF.

15. Remove the charge air cooler (see page 9-7).

16. Check for blockage or clogging at these parts:

    - Hose (A) between the turbocharger wastegate control solenoid valve and intake air duct (turbocharger inlet connecting tube)
    - Intake air duct (turbocharger inlet connecting tube) port (B)

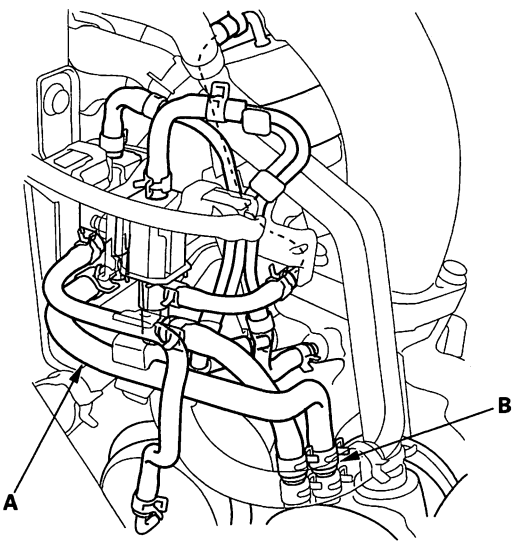


*: This view is from the rear of the engine compartment.

    *Are the parts OK?*

    **YES**—Go to step 17.

    **NO**—Repair or replace any damaged parts, then go to step 18.

17. Inspect the turbocharger wastegate control solenoid valve (see page 11-433).

    *Is the solenoid valve OK?*

    **YES**—Check the turbocharger (see page 9-11) and turbocharger wastegate control actuator (see page 9-11). Repair or replace any faulty parts, then go to step 18.

    **NO**—Replace the turbocharger wastegate control solenoid valve (see page 11-434), then go to step 18.

(cont'd)

Protected by AR



## DTC Troubleshooting (cont'd)

18. Install the parts in the reverse order of removal.

19. Turn the ignition switch ON (II).

20. Reset the PCM with the HDS.

21. Do the PCM idle learn procedure (see page 11-339).

22. Start the engine. Hold the engine speed at 3,000 rpm without load (in Park or neutral) until the radiator fan comes on, then let it idle.

23. Test-drive under these conditions:

    - Engine speed above 3,800 rpm
    - REL TP SENSOR above 59 deg
    - Transmission in D position
    - Drive at least 4 seconds

24. Check for Temporary DTCs or DTCs with the HDS.

    *Is DTC P0229 indicated?*

    **YES**—Check the turbocharger bypass control solenoid valve, turbocharger wastegate control solenoid valve, and its connecting hose and port, then go to step 1.

    **NO**—Troubleshooting is complete. If any other Temporary DTCs or DTCs are indicated, go to the indicated DTC's troubleshooting. ■



BACK

Protected by AR

**DTC P1233:** Turbocharger Boost Sensor/ BARO Sensor Incorrect Correlation

**DTC P1234:** Turbocharger Boost Sensor/MAP Sensor Incorrect Correlation

NOTE:
- Before you troubleshoot, record all freeze data and any on-board snapshot, and review the general troubleshooting information (see page 11-3).
- If DTC P1233 is indicated alone, do the troubleshooting for DTC P0236 and P2227 using freeze data from P1233. If DTC P1234 is indicated alone, do the troubleshooting for DTC P0236, P1128, and P1129 using freeze data from P1234.
- If any of the DTCs listed below are indicated at the same time as DTC P1233 and/or P1234, troubleshoot those DTCs first, then recheck for P1233 and/or P1234.

  P0236: Turbocharger boost sensor
  P1128, P1129: Manifold absolute pressure (MAP) sensor
  P2227: Barometric pressure (BARO) sensor

Protected by AR



## DTC Troubleshooting (cont'd)

### DTC P2261: Turbocharger Bypass Control Valve Stuck Closed

**Special Tools Required**
Vacuum pump/gauge, 0—30 in.Hg, Snap-on YA4000A or equivalent, commercially available

NOTE: Before you troubleshoot, record all freeze data and any on-board snapshot, and review the general troubleshooting information (see page 11-3).

1. Turn the ignition switch ON (II).

2. Clear the DTC with the HDS.

3. Select TURBOCHARGER BYPASS CONTROL SYSTEM TEST in the INSPECTION MENU with the HDS.

   *Is the result OK?*

   **YES**—Intermittent failure, the system is OK at this time.■

   **NO**—Go to step 4.

4. Select TURBOCHARGER BYPASS CONTROL SOLENOID VALVE ON in the INSPECTION MENU with the HDS.

   *Do you hear the solenoid operating?*

   **YES**—Go to step 5.

   **NO**—Go to step 9.

5. Turn the ignition switch OFF.

6. Check for clogging at the air bypass outlet pipe (see page 9-7).

   *Is the pipe OK?*

   **YES**—Go to step 8.

   **NO**—Repair the pipe, then go to step 10.

7. Disconnect the vacuum/pressure hose (A) from the turbocharger bypass control valve (B), then connect the vacuum pump/gauge, 0—30 in.Hg, as shown.

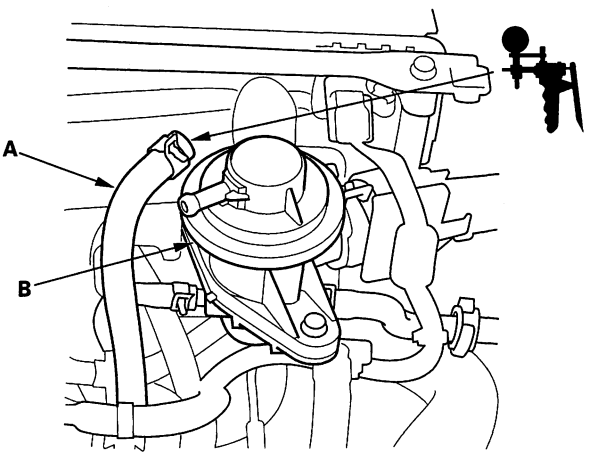


8. Start the engine. Hold the engine speed at 3,000 rpm without load (in Park or neutral) until the radiator fan comes on, then let it idle.

   *Is there vacuum?*

   **YES**—Inspect the turbocharger bypass control valve (see page 9-10).

   **NO**—Go to step 9.



BACK

Protected by AR

9. Replace the turbocharger bypass control solenoid valve (see page 11-431).

10. Turn the ignition switch ON(II).

11. Reset the PCM with the HDS.

12. Do the PCM idle learn procedure (see page 11-339).

13. Test-drive under these conditions:

    - Engine speed above 4,500 rpm
    - Accelerate with throttle fully open, then decelerate with throttle fully closed at least 3 seconds

14. Check for Temporary DTCs or DTCs with the HDS.

    *Is DTC P2261 indicated?*

    **YES**—Check the turbocharger bypass control solenoid valve and its connecting hose, then go to step 1.

    **NO**—Troubleshooting is complete. If any other Temporary DTCs or DTCs are indicated, go to the indicated DTC's troubleshooting. ■

Protected by AR



## DTC Troubleshooting (cont'd)

### DTC P2263: Turbocharger Boost System Performance Problem

NOTE:
- Before you troubleshoot, record all freeze data and any on-board snapshot, and review the general troubleshooting information (see page 11-3).
- If DTC P0229 is stored at the same time as DTC P2263, troubleshoot DTC P0229 first, then recheck for DTC P2263.

1. Inspect the air cleaner element (see page 11-395).

   *Is the air cleaner element clogged?*

   **YES**—Replace the air cleaner element (see page 11-395), then go to step 26.

   **NO**—Go to step 2.

2. Check for leak or damage at these parts.

   - Intake air duct (turbocharger outlet pipe)
   - Intake air duct (charger air cooler inlet hose)
   - Intake air duct (charger air cooler outlet tube)

   *Are the parts OK?*

   **YES**—Go to step 3.

   **NO**—Repair or replace the damaged parts, then go to step 26.

3. Turn the ignition switch ON (II).

4. Check the TURBOCHARGER BOOST SENSOR and BARO SENSOR in the DATA LIST with the HDS.

   *Does the value of TURBOCHARGER BOOST SENSOR and BARO SENSOR differ 6.8 kPa (2.0 in.Hg, 50 mmHg) or more?*

   **YES**—Replace the turbocharger boost sensor (see page 11-436), then go to step 26.

   **NO**—Go to step 5.



BACK

Protected by AR

5. Clear the DTC with the HDS.

6. Select TURBOCHARGER BYPASS CONTROL SYSTEM TEST in the INSPECTION MENU with the HDS.

   *Is the result OK?*

   **YES**—Go to step 12.

   **NO**—Go to step 7.

7. Select TURBOCHARGER BYPASS CONTROL SOLENOID VALVE ON in the INSPECTION MENU with the HDS.

   *Do you hear the solenoid operating?*

   **YES**—Go to step 8.

   **NO**—Replace the turbocharger bypass control solenoid valve (see page 11-432), then go to step 26.

8. Turn the ignition switch OFF.

9. Remove the charge air cooler cover (see step 1 on page 9-8).

10. Check for poor connections, blockage, or damage at these parts.

    - Hose (A) between the turbocharger bypass control solenoid valve and the turbocharger bypass control valve
    - Hose (B) between the turbocharger bypass control solenoid valve and the turbocharger bypass control valve
    - Turbocharger bypass control valve base port (C)

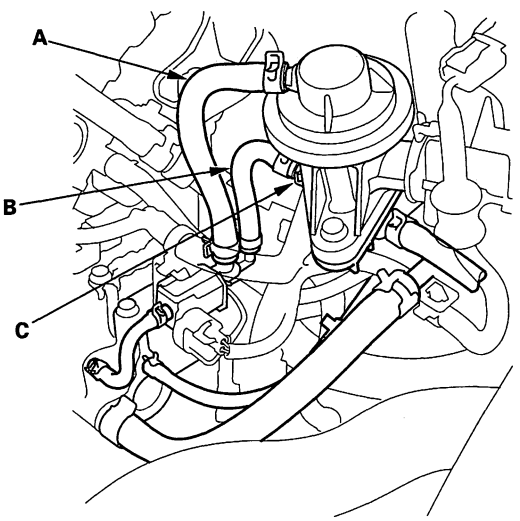


    *Are the parts OK?*

    **YES**—Go to step 11.

    **NO**—Repair or replace any damaged parts, then go to step 26.

11. Inspect the turbocharger bypass control solenoid valve (see page 11-431).

    *Is the solenoid valve OK?*

    **YES**—Inspect the turbocharger bypass control valve (see page 9-10). If the turbocharger bypass control valve is faulty, replace the turbocharger bypass control valve, then go to step 26. If the turbocharger bypass control valve is OK, go to step 12.

    **NO**—Replace the turbocharger bypass control solenoid valve (see page 11-432), then go to step 26.

(cont'd)

Protected by AR



## DTC Troubleshooting (cont'd)

12. Select the TURBOCHARGER WASTEGATE CONTROL SYSTEM TEST in the INSPECTION MENU with the HDS.

    *Is the result OK?*

    **YES**—Go to step 18.

    **NO**—Go to step 13.

13. Select the TURBOCHARGER WASTEGATE CONTROL SOLENOID VALVE ON in the INSPECTION MENU with the HDS.

    *Do you hear the solenoid operating?*

    **YES**—Go to step 14.

    **NO**—Replace the turbocharger wastegate control solenoid valve (see page 11-434), then go to step 26.

14. Turn the ignition switch OFF.

15. Remove the charge air cooler (see page 9-7).

16. Check for blockage or clogging at these parts.

    - Hose (A) between the turbocharger wastegate control solenoid valve and Intake air duct (turbocharger inlet connecting tube)
    - Intake air duct (turbocharger inlet connecting tube) port (B)

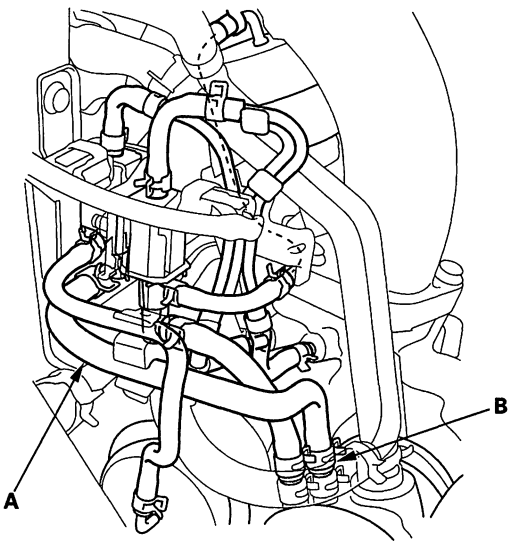


*: This view is from the rear of the engine compartment.

*Are the parts OK?*

**YES**—Go to step 17.

**NO**—Repair or replace any damaged parts, then go to step 26.

17. Inspect the turbocharger wastegate control solenoid valve (see page 11-433).

    *Is the solenoid valve OK?*

    **YES**—Check the turbocharger (see page 9-11), and turbocharger wastegate control actuator (see page 9-11). If the turbocharger or the turbocharger wastegate control actuator is faulty, replace the faulty parts, then go to step 26. If the turbocharger and the turbocharger wastegate actuator are OK, go to step 18.

    **NO**—Replace the turbocharger wastegate control solenoid valve (see page 11-434), then go to step 26.



BACK

Protected by AR

18. Clear the DTC with the HDS.

19. Select the TURBOCHARGER BOOST CONTROL SYSTEM TEST in the INSPECTION MENU with the HDS.

    *Is the result OK?*

    **YES**—Go to step 20.

    **NO**—Go to step 21.

20. Check for clogging or damaged in these parts.

    - Turbocharger (see page 9-11).
    - Warm up TWC (see page 11-440).
    - Under-floor TWC (see page 11-443).
    - Exhaust pipe (see page 9-23).

    *Are the parts OK?*

    **YES**—Intermittent failure, the system is OK at this time.■

    **NO**—Repair or replace any damaged parts, then go to step 26.

21. Select TURBOCHARGER BOOST CONTROL SOLENOID VALVE ON in the INSPECTION MENU with the HDS.

    *Do you hear the solenoid operating?*

    **YES**—Go to step 22.

    **NO**—Replace the turbocharger boost control solenoid valve (see page 11-436), then go to step 26.

22. Turn the ignition switch OFF.

23. Remove the charge air cooler (see page 9-7).

24. Check for blockage or clogging at these parts.

    - Hose (A) between the turbocharger boost control solenoid valve and intake air duct (turbocharger inlet connecting tube)
    - Intake air duct (turbocharger inlet connecting tube) port (B)

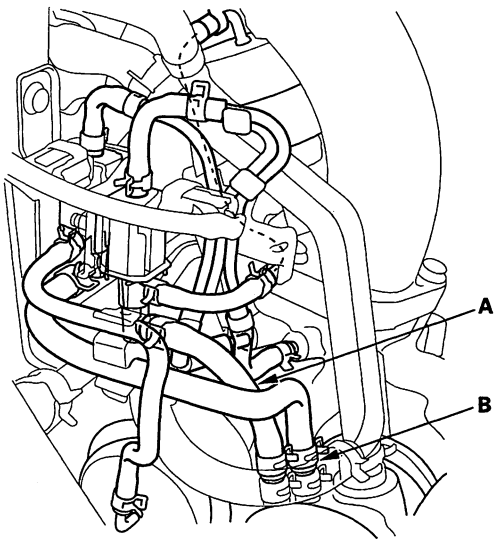


*: This view is from the rear of the engine compartment.

    *Are the parts OK?*

    **YES**—Go to step 25.

    **NO**—Repair or replace any damaged parts, then go to step 26.

25. Inspect the turbocharger boost control solenoid valve (see page 11-435).

    *Is the solenoid valve OK?*

    **YES**—Check the turbocharger (see page 9-11), and turbocharger boost control actuator (see page 9-11). Replace the turbocharger or turbocharger boost control actuator if they are faulty, then go to step 26.

    **NO**—Replace the turbocharger boost control solenoid valve (see page 11-436), then go to step 26.

(cont'd)

Protected by AR



## DTC Troubleshooting (cont'd)

26. Reinstall all parts.

27. Turn the ignition switch ON (II).

28. Reset the PCM with the HDS.

29. Do the PCM idle learn procedure (see page 11-339).

30. Start the engine. Hold the engine speed at 3,000 rpm without load (in Park or neutral) until the radiator fan comes on, then let it idle.

31. Test-drive under these conditions:

    - ECT SENSOR 1 above 158 °F (70 °C)
    - Engine speed above 1,500 rpm
    - Accelerate for 2 seconds or more (under half throttle) at least 10 times

32. Check for Temporary DTCs or DTCs with the HDS.

    *Is DTC P2263 indicated?*

    **YES**—Check the turbocharger boost sensor, the turbocharger bypass control solenoid valve, the turbocharger wastegate control solenoid valve, the turbocharger boost control solenoid valve, and its connecting hose and port, then go to step 1.

    **NO**—Troubleshooting is complete. If any other Temporary DTCs or DTCs are indicated, go to the indicated DTC's troubleshooting. ■



BACK

Protected by AR

# Turbocharger Bypass Control Solenoid Valve Inspection

**Special Tools Required**
Vacuum pump/gauge, 0—30 in.Hg, Snap-on YA4000A or equipment, commercially available

1. Remove the charge air cooler cover (see step 1 on page 9-8).

2. Disconnect the hoses (A) from the turbocharger bypass control solenoid valve (B), and connect the vacuum pump/gauge, 0—30 in.Hg (C) to the solenoid valve as shown.

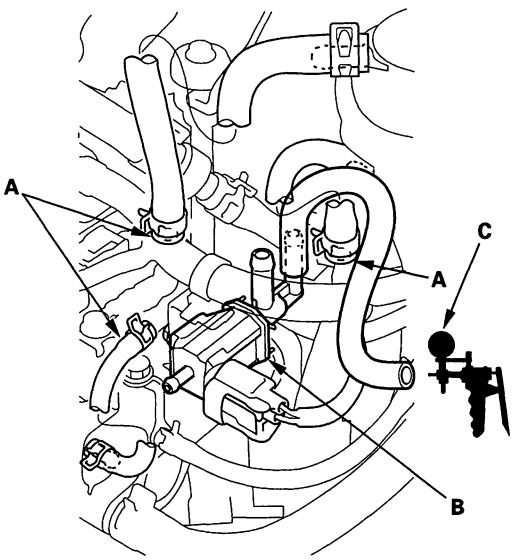


3. Apply vacuum to the port.

   - If it holds vacuum, release the vacuum, then go to step 4.
   - If it doesn't hold vacuum, replace the turbocharger bypass control solenoid valve (see page 11-432).

4. Turn the ignition switch ON (II).

5. Select TURBOCHARGER BYPASS CONTROL SOLENOID VALVE ON in the INSPECTION MENU with the HDS.

6. Reapply vacuum to the port.

   - If it holds vacuum, replace the turbocharger bypass control solenoid valve (see page 11-432).
   - If it doesn't hold vacuum, go to step 7.

7. Turn the ignition switch OFF, then remove the vacuum pump/gauge from the turbocharger bypass control solenoid valve.

8. Connect the vacuum pump/gauge, 0—30 in.Hg (A) to the turbocharger bypass control solenoid valve (B) as shown.

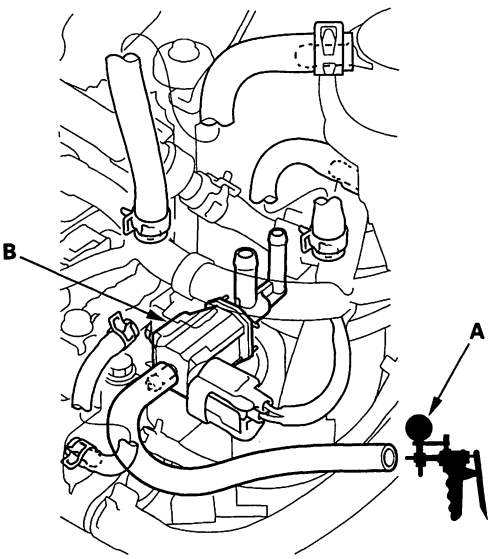


9. Apply vacuum to the port.

   - If it holds vacuum, replace the turbocharger bypass control solenoid valve (see page 11-432).
   - If it doesn't hold vacuum, go to step 10.

10. Turn the ignition switch ON (II).

11. Select TURBOCHARGER BYPASS CONTROL SOLENOID VALVE ON in the INSPECTION MENU with the HDS.

12. Reapply vacuum to the port.

   - If it holds vacuum, the turbocharger bypass control solenoid valve is OK.
   - If it doesn't hold vacuum, replace the turbocharger bypass control solenoid valve (see page 11-432).

Protected by AR



## Turbocharger Bypass Control Solenoid Valve Replacement

1. Remove the charge air cooler cover (see step 1 on page 9-8).

2. Disconnect the hoses (A).

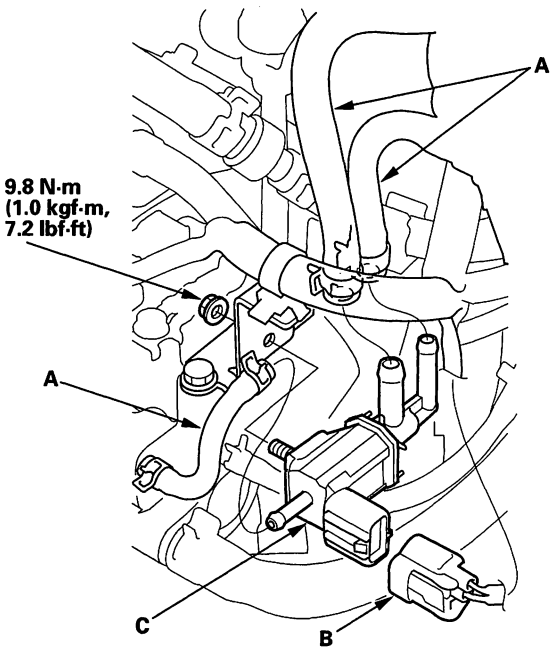


3. Disconnect the turbocharger bypass control solenoid valve connector (B).

4. Remove the turbocharger bypass control solenoid valve (C).

5. Install the parts in the reverse order of removal.



BACK

Protected by AR

# Turbocharger Wastegate Control Solenoid Valve Inspection

**Special Tools Required**
Vacuum pump/gauge, 0—30 in.Hg, Snap-on YA4000A or equipment, commercially available

1. Remove the charge air cooler (see page 9-7).

2. Disconnect the hoses (A) from the turbocharger wastegate control solenoid valve (B), and connect the vacuum pump/gauge, 0—30 in.Hg (C) to the solenoid valve as shown.

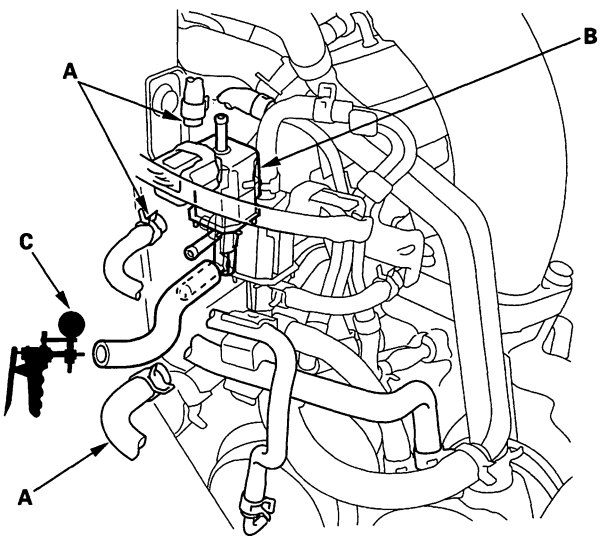


*: This view is from the rear of the engine compartment.

3. Apply vacuum to the port.

   - If it holds vacuum, release the vacuum, then go to step 4.
   - If it doesn't hold vacuum, replace the turbocharger wastegate control solenoid valve (see page 11-434).

4. Turn the ignition switch ON (II).

5. Select TURBOCHARGER WASTEGATE CONTROL SOLENOID VALVE ON in the INSPECTION MENU with the HDS.

6. Reapply vacuum to the port.

   - If it holds vacuum, replace the turbocharger wastegate control solenoid valve (see page 11-434).
   - If it doesn't hold vacuum, go to step 7.

7. Turn the ignition switch OFF, then remove the vacuum pump/gauge from the turbocharger wastegate control solenoid valve.

8. Connect the vacuum pump/gauge, 0—30 in.Hg (A) to the turbocharger wastegate control solenoid valve (B) as shown.

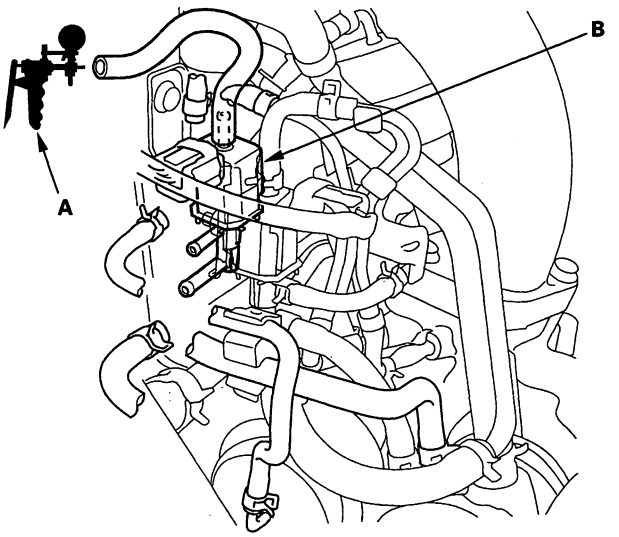


*: This view is from the rear of the engine compartment.

9. Apply vacuum to the port.

   - If it holds vacuum, replace the turbocharger wastegate control solenoid valve (see page 11-434).
   - If it doesn't hold vacuum, go to step 10.

10. Turn the ignition switch ON (II).

11. Select TURBOCHARGER WASTEGATE CONTROL SOLENOID VALVE ON in the INSPECTION MENU with the HDS.

12. Reapply vacuum to the port.

    - If it holds vacuum, replace the turbocharger wastegate control solenoid valve (see page 11-434).
    - If it doesn't hold vacuum, the turbocharger wastegate control solenoid valve is OK.

Protected by AR



## Turbocharger Wastegate Control Solenoid Valve Replacement

1. Remove the charge air cooler (see page 9-7).

2. Disconnect the breather hose (A).

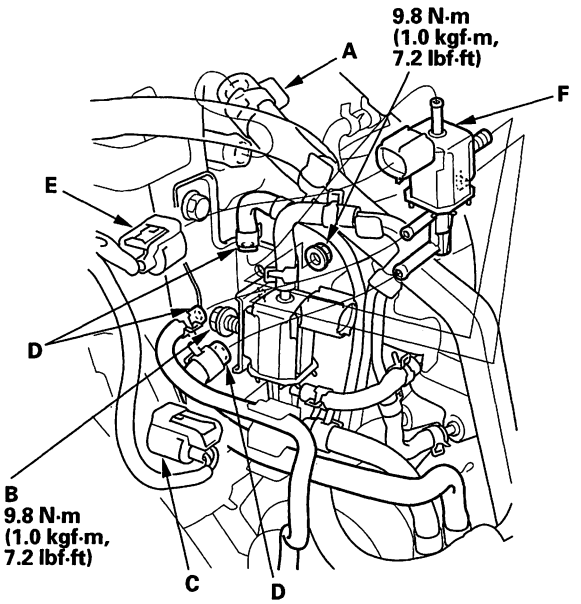


*: This view is from the rear of the engine compartment.

3. Loosen the nut (B), and disconnect the turbocharger boost control solenoid valve connector (C).

4. Disconnect the hoses (D), and the turbocharger wastegate control solenoid valve connector (E).

5. Remove the turbocharger wastegate control solenoid valve (F).

6. Install the parts in the reverse order of removal.



BACK

Protected by AR

# Turbocharger Boost Control Solenoid Valve Inspection

**Special Tools Required**
Vacuum pump/gauge, 0—30 in.Hg, Snap-on YA4000A or equipment, commercially available

1. Remove the charge air cooler (see page 9-7).

2. Disconnect the hoses (A) from the turbocharger boost control solenoid valve (B), and connect the vacuum pump/gauge, 0—30 in.Hg (C) to the solenoid valve as shown.

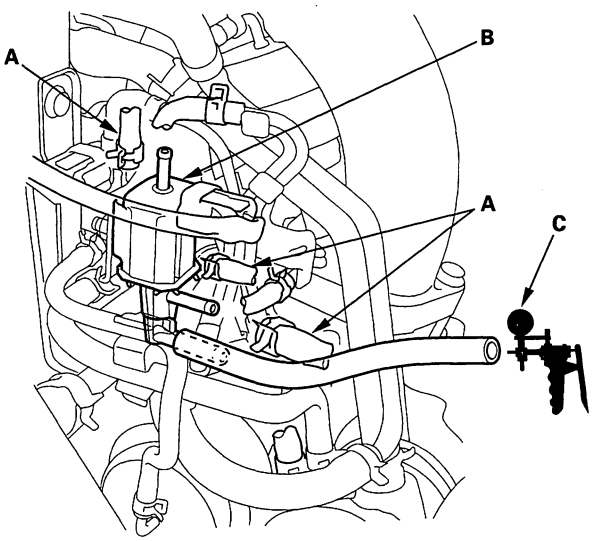


*: This view is from the rear of the engine compartment.

3. Apply vacuum to the port.

   - If it holds vacuum, release the vacuum, then go to step 4.
   - If it doesn't hold vacuum, replace the turbocharger boost control solenoid valve (see page 11-436).

4. Turn the ignition switch ON (II).

5. Select TURBOCHARGER BOOST CONTROL SOLENOID VALVE ON in the INSPECTION MENU with the HDS.

6. Reapply vacuum to the port.

   - If it holds vacuum, replace the turbocharger boost control solenoid valve (see page 11-436).
   - If it doesn't hold vacuum, go to step 7.

7. Turn the ignition switch OFF, then remove the vacuum pump/gauge from the turbocharger boost control solenoid valve.

8. Connect the vacuum pump/gauge, 0—30 in.Hg (A) to the turbocharger boost control solenoid valve (B) as shown.

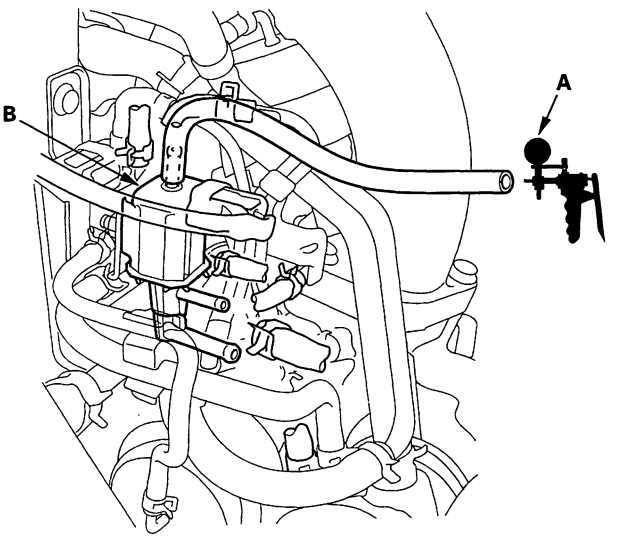


*: This view is from the rear of the engine compartment.

9. Apply vacuum to the port.

   - If it holds vacuum, replace the turbocharger boost control solenoid valve (see page 11-436).
   - If it doesn't hold vacuum, go to step 10.

10. Turn the ignition switch ON (II).

11. Select TURBOCHARGER BOOST CONTROL SOLENOID VALVE ON in the INSPECTION MENU with the HDS.

12. Reapply vacuum to the port.

    - If it holds vacuum, the turbocharger boost control solenoid valve is OK.
    - If it doesn't hold vacuum, replace the turbocharger boost control solenoid valve (see page 11-436).

Protected by AR



## Turbocharger Boost Control Solenoid Valve Replacement

1. Remove the charge air cooler (see page 9-7).
2. Disconnect the turbocharger wastegate control solenoid valve connector (A).

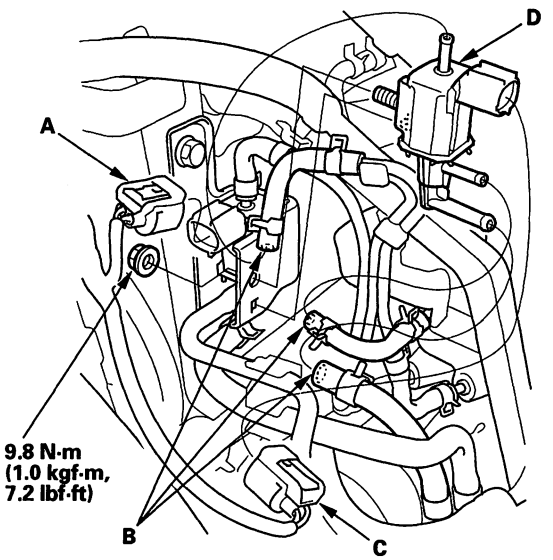


*: This view is from the rear of the engine compartment.

3. Disconnect the hoses (B), and the turbocharger boost control valve connector (C).
4. Remove the turbocharger boost control solenoid valve (D).
5. Install the parts in the reverse order of removal.

## Turbocharger Boost Sensor Replacement

1. Remove the charge air cooler cover (see step 1 on page 9-8).
2. Remove the charge air cooler cover stay (A).

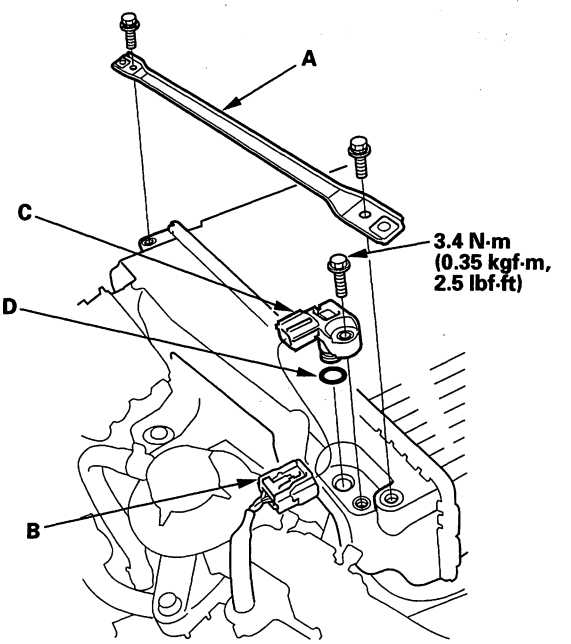


3. Disconnect the turbocharger boost sensor connector (B).
4. Remove the turbocharger boost sensor (C).
5. Install the parts in the reverse order of removal with a new O-ring (D).



BACK

Protected by AR



## Component Location Index

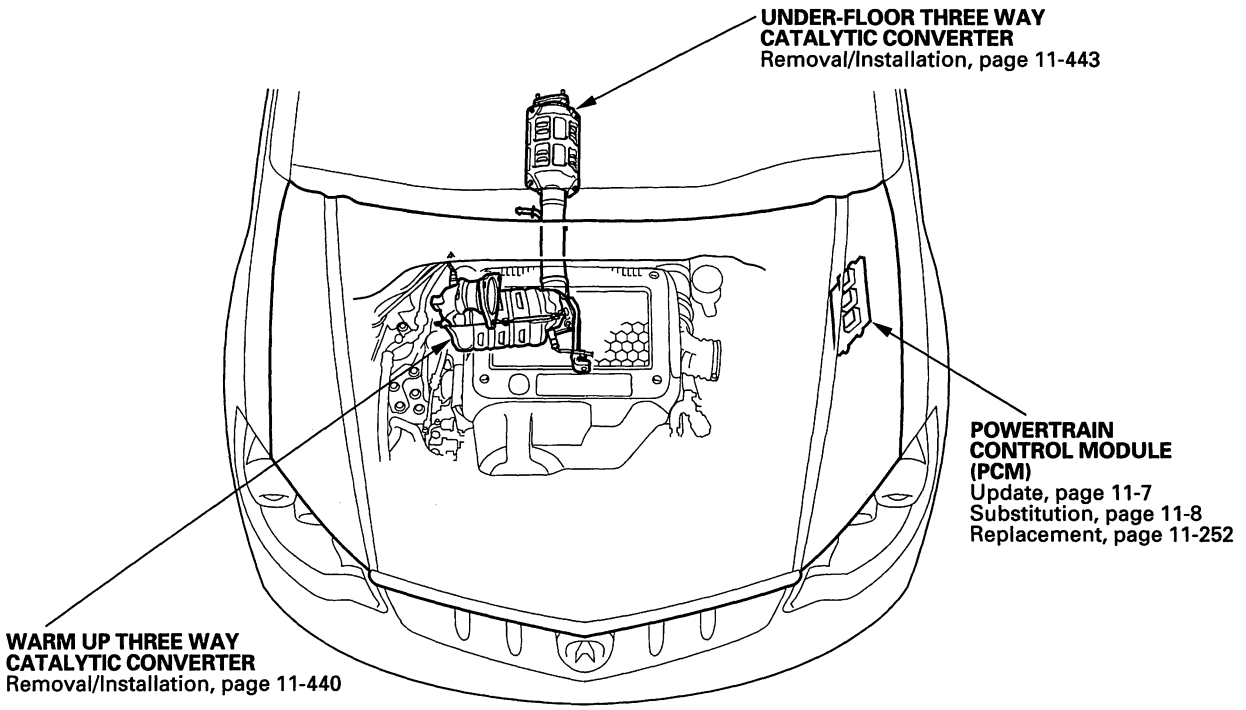


**ENGINE REAR VIEW**

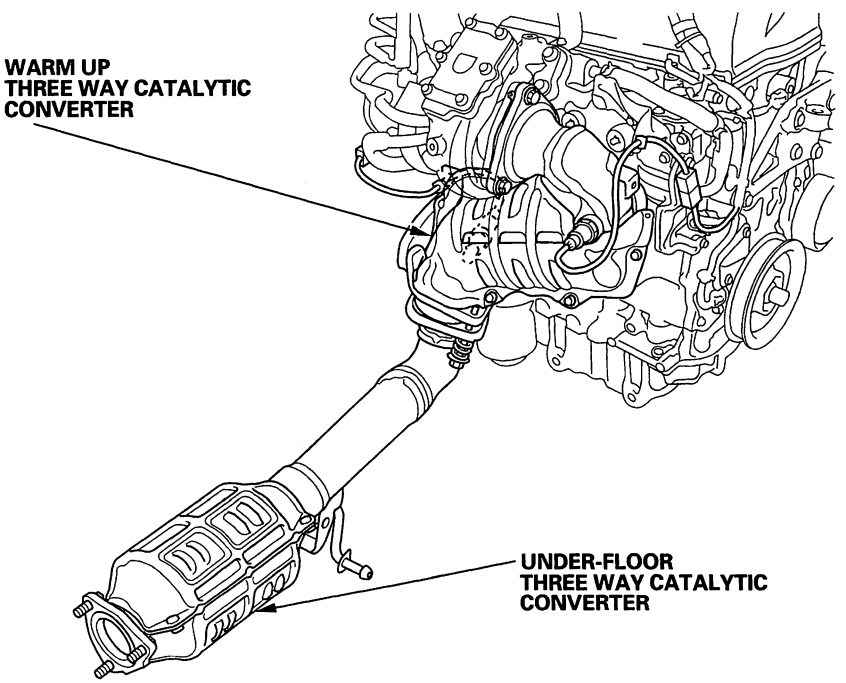

Protected by AR



## DTC Troubleshooting

### DTC P0420: Catalyst System Efficiency Below Threshold

NOTE:
- Before you troubleshoot, record all freeze data and any on-board snapshot, and review the general troubleshooting information (see page 11-3).
- Poor quality fuel may cause this DTC.

1. Turn the ignition switch ON (II).

2. Clear the DTC with the HDS.

3. Start the engine. Hold the engine speed at 3,000 rpm without load (in Park or neutral) until the radiator fan comes on, then let it idle.

4. Test-drive under these conditions:

   - ECT SENSOR 1 above 158 °F (70 °C)
   - Transmission in D position
   - Vehicle speed between 45—75 mph (72—120 km/h) for 5 minutes or more with cruise control set
   - Maintain the vehicle speed at 55 mph (88 km/h) for 5 minutes or more with cruise control set

5. Monitor the OBD STATUS for DTC P0420 in the DTCs MENU with the HDS.

   *Does the screen indicate EXECUTING?*

   **YES**—Go to step 6.

   **NO**—If the screen indicates OUT OF CONDITION, go to step 4 and recheck. If the screen indicates PASSED, intermittent failure, the system is OK at this time. If the screen indicates FAILED, go to step 8.

6. Continue test driving until a result comes on.

7. Monitor the OBD STATUS for DTC P0420 in the DTCs MENU with the HDS.

   *Does the screen indicate FAILED?*

   **YES**—Go to step 8.

   **NO**—If the screen indicates PASSED, intermittent failure, the system is OK at this time. If the screen indicates EXECUTING, keep driving until a result comes on. If the screen indicates OUT OF CONDITION, go to step 4 and recheck.

8. Turn the ignition switch OFF.

9. Replace the WU-TWC (see page 11-440).

10. Turn the ignition switch ON (II).

11. Reset the PCM with the HDS.

12. Do the PCM idle learn procedure (see page 11-339).

13. Start the engine. Hold the engine speed at 3,000 rpm without load (in Park or neutral) until the radiator fan comes on, then let it idle.

14. Test-drive for about 10 minutes, varying the vehicle speed.

15. Check the CATA MONITOR CONDITION in the DATA LIST with the HDS.

    *Is the temperature OK?*

    **YES**—Go to step 16.

    **NO**—Go to step 13 and recheck.

16. Test-drive under these conditions:

    - ECT SENSOR 1 above 158 °F (70 °C)
    - Transmission in D position
    - Vehicle speed at 55 mph (88 km/h) for 5 minutes or more with cruise control set



BACK

Protected by AR

17. Monitor the OBD STATUS for DTC P0420 in the DTCs MENU with the HDS.

    *Does the screen indicate EXECUTING?*

    **YES**—Go to step 18.

    **NO**—Go to step 16 and recheck.

18. Continue test-driving until a result comes on.

19. Check for Temporary DTCs or DTCs with the HDS.

    *Are any Temporary DTCs or DTCs indicated?*

    **YES**—Go to the indicated DTC's troubleshooting. ■

    **NO**—Go to step 20.

20. Monitor the OBD STATUS for DTC P0420 in the DTCs MENU with the HDS.

    *Does the screen indicate PASSED?*

    **YES**—Troubleshooting is complete. ■

    **NO**—If the screen indicates FAILED, check the fuel quality. If the screen indicates EXECUTING, keep driving until a result comes on. If the screen indicates OUT OF CONDITION, go to step 13 and recheck.

Protected by AR



## Warm Up TWC Removal/Installation

1. Remove the charge air cooler cover.

2. Remove the charge air cooler cover bracket (A).

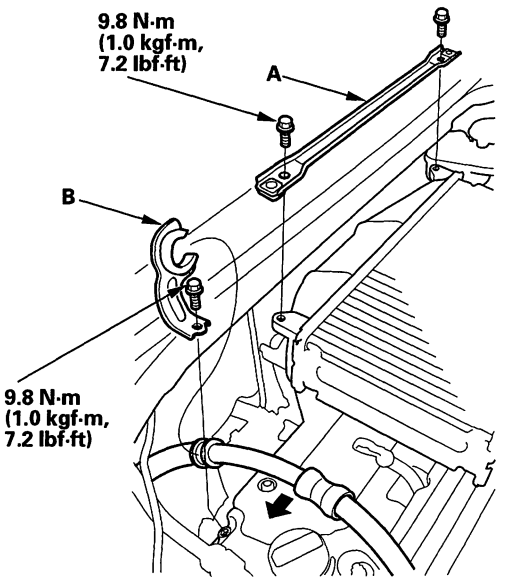


3. Remove the power steering feed hose stay (B), then move the hose (C) in the direction of the arrow.

4. Remove the bolts (A), then remove the turbocharger cover (B).

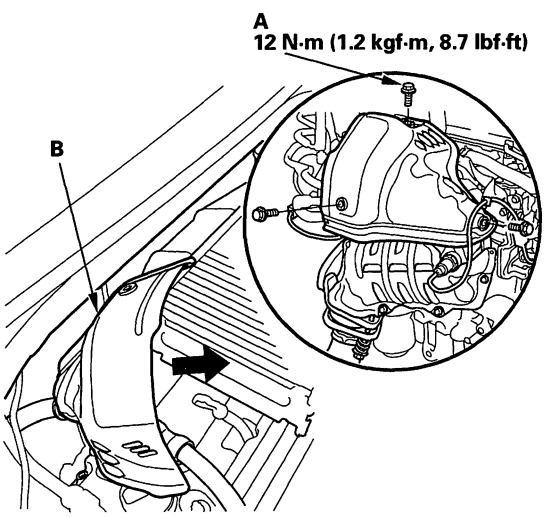


5. Remove the A/F sensor (see page 11-245).

6. Remove the water hose upper cover (A).

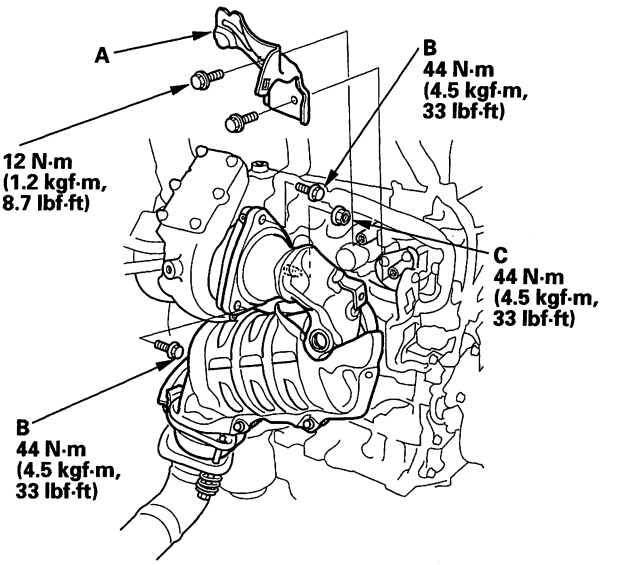


*: This view is from the rear of the engine compartment.

7. Remove the bolts (B) and nut (C).

8. Raise the vehicle all the way up on a lift.

9. Remove the under-floor TWC (see page 11-443).

10. Remove the secondary HO2S (see page 11-245).

11. Remove the splash shield (see page 20-177).

12. Remove the intermediate shaft (see page 16-21).

13. Remove the P/S heat shield (see step 22 on page 17-32).



BACK

Protected by AR

14. Disconnect the engine oil pressure switch connector (A), the right front wheel sensor connector (B), and the CKP sensor connector (C), then remove harness clamp (D).

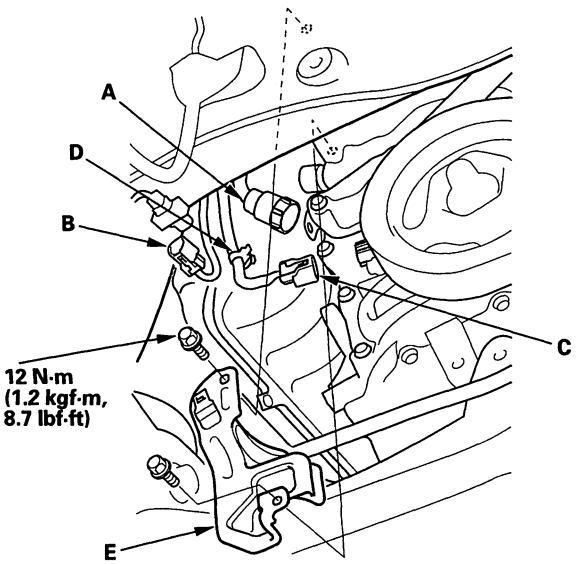


15. Remove the water hose lower cover (E).

16. Remove the torque rod mounting bolts (A) from the oil pan.

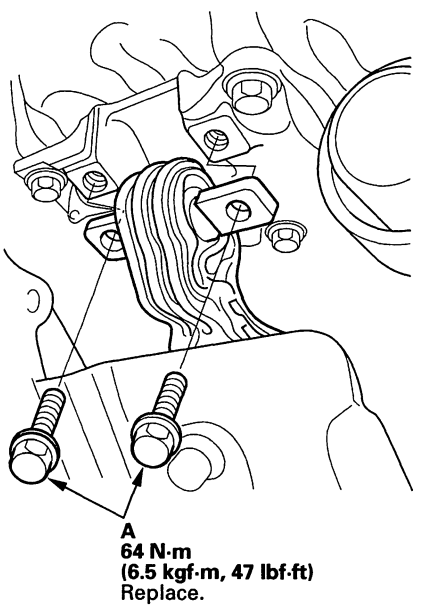


17. Remove the WU-TWC bracket (A), then remove the WU-TWC (B) and gasket (C) from the turbocharger.

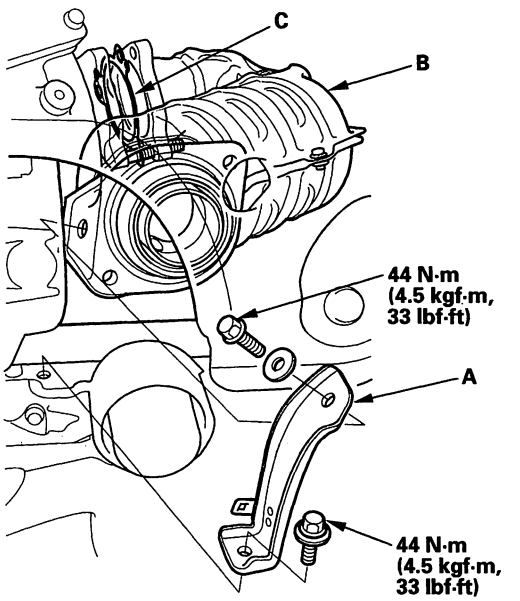


18. Lower the WU-TWC.

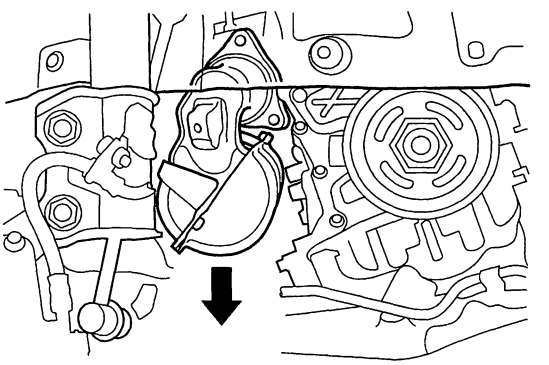

(cont'd)

Protected by AR



## Warm Up TWC Removal/Installation (cont'd)

19. Turn the under-floor TWC side of the WU-TWC upward as shown.

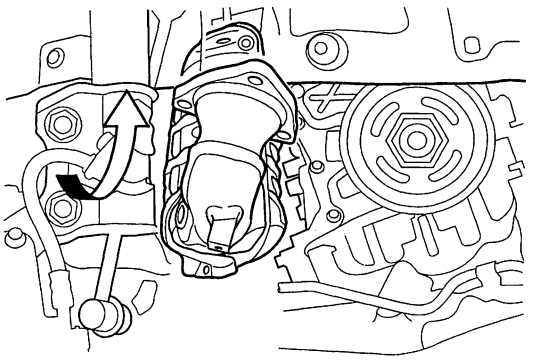

20. After the turbocharger side of the WU-TWC came out, turn the under-floor TWC side of the WU-TWC downward, and take it out by turning it.

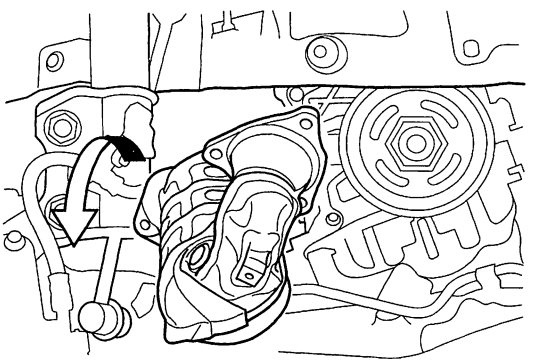

21. Remove the converter cover (A).

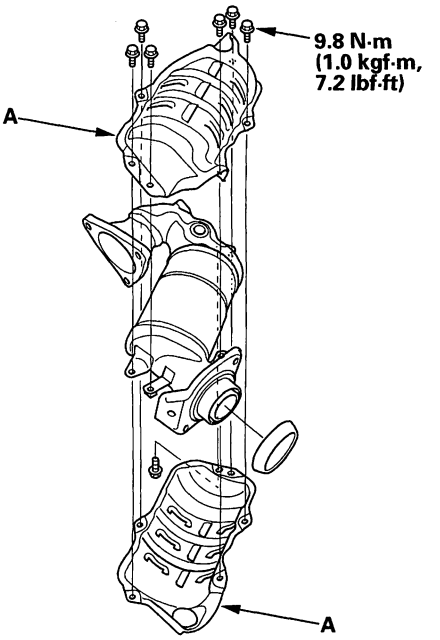


22. Install the parts in the reverse order of removal with new gaskets (turbocharger side and under-floor TWC side). Also, replace the bolts and nut that attach the WU-TWC to the turbocharger.

23. Refill the ATF (see page 14-239).



BACK

Protected by AR

## Under-floor TWC Removal/Installation

1. Remove the under-floor TWC (A).

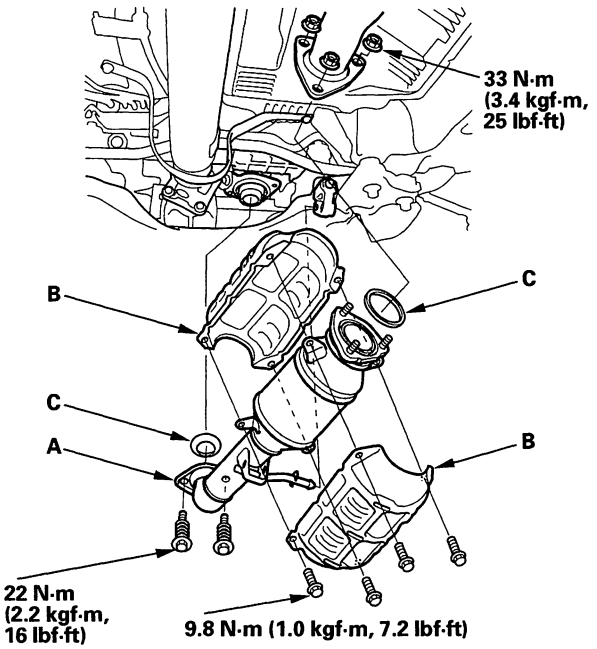


2. Remove the converter cover (B).

3. Install the parts in the reverse order of removal with new gaskets (C).

Protected by AR

# PCV System

## Component Location Index

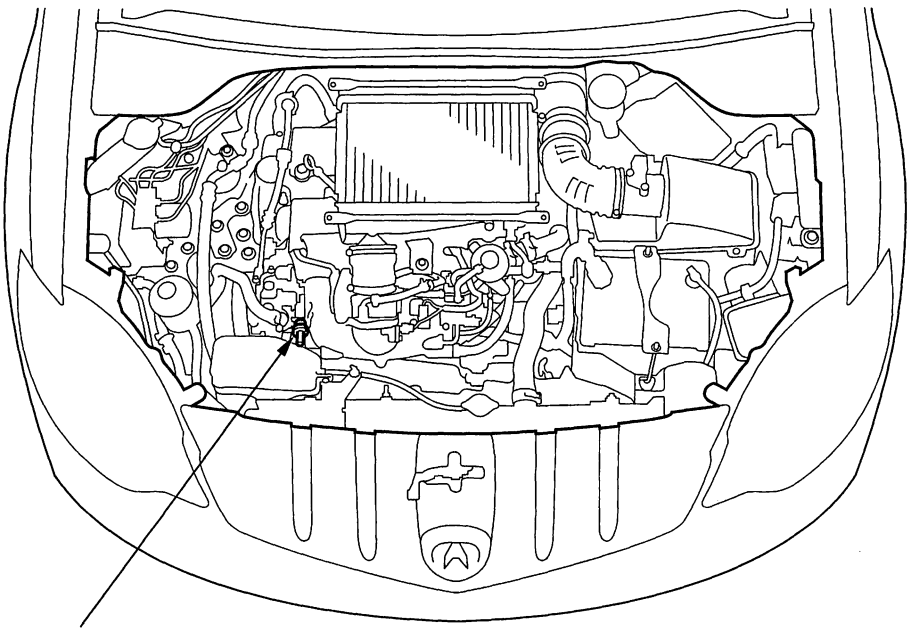

**PCV VALVE**
Inspection, page 11-445
Replacement, page 11-445



BACK

Protected by AR

## PCV Valve Inspection

1. Check the PCV valve (A), hoses (B), and connections for leaks or restrictions.

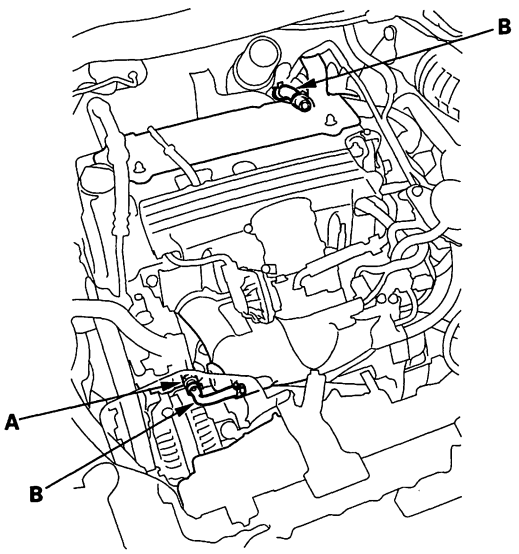


2. At idle, make sure there is a clicking sound from the PCV valve when the hose between the PCV valve and intake manifold is lightly pinched (A) with your fingers or pliers.
   If there is no clicking sound, check the PCV valve washer for cracks or damage. If the washer is OK, replace the PCV valve and recheck.

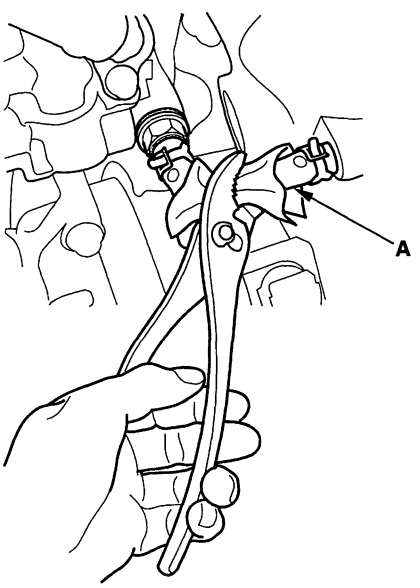


## PCV Valve Replacement

1. Disconnect the PCV hose.
2. Remove the PCV valve (A).

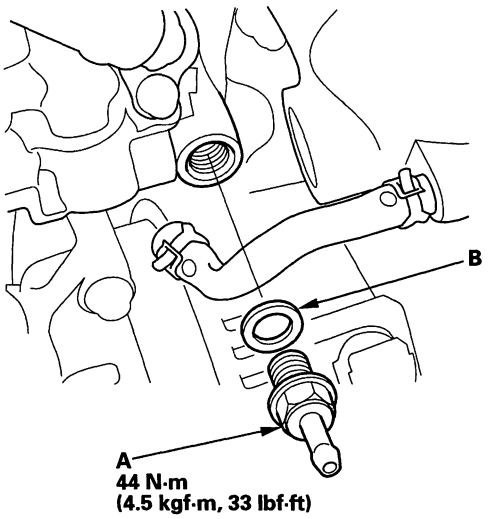


3. Install the parts in the reverse order of removal with a new washer (B).

BACK

Protected by AR

# EVAP System

## Component Location Index

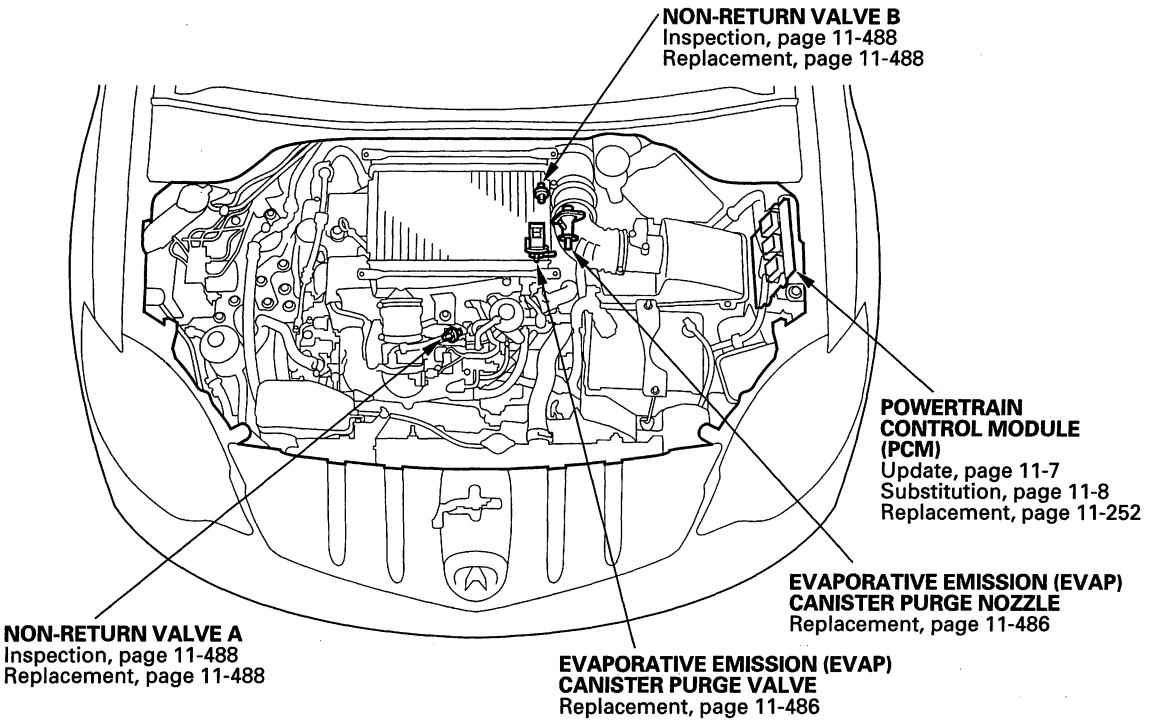


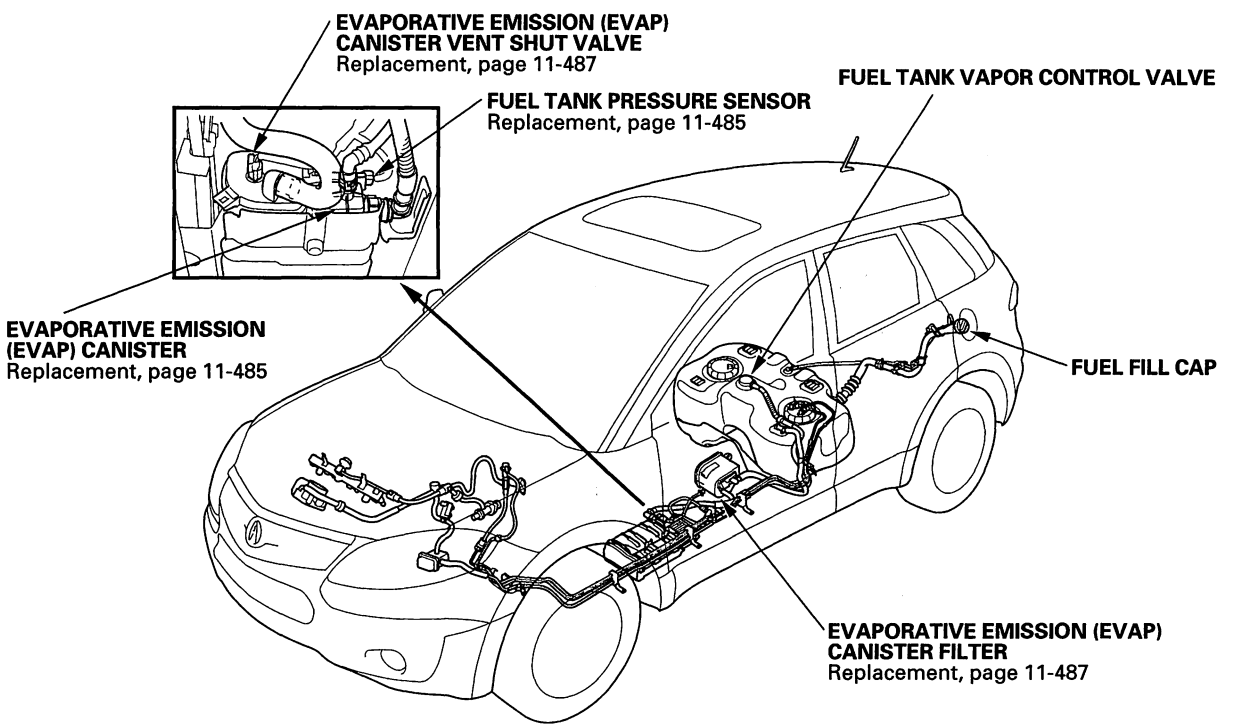




BACK

Protected by AR

# DTC Troubleshooting

## DTC P0443: EVAP Canister Purge Valve Circuit Malfunction

**Special Tools Required**
Vacuum pump/gauge, 0—30 in.Hg, Snap-on YA4000A or equivalent, commercially available

NOTE: Before you troubleshoot, record all freeze data and any on-board snapshot, and review the general troubleshooting information (see page 11-3).

1. Turn the ignition switch ON (II).
2. Clear the DTC with the HDS.
3. Start the engine. Hold the engine speed at 3,000 rpm without load (in Park or neutral) until the radiator fan comes on, then let it idle.
4. Check for Temporary DTCs or DTCs with the HDS.

   *Is DTC P0443 indicated?*

   **YES**—Go to step 5.

   **NO**—Intermittent failure, the system is OK at this time. Check for poor connections or loose terminals at the EVAP canister purge valve and the PCM. ■
5. Turn the ignition switch OFF, and allow the engine to cool below 140 °F (60 °C).
6. Remove the intake air duct (air flow tube) (see step 19 on page 9-16).
7. Disconnect the vacuum hose (A) from the purge valve (B) in the engine compartment, and connect a vacuum pump/gauge, 0—30 in.Hg, to the EVAP canister purge valve.

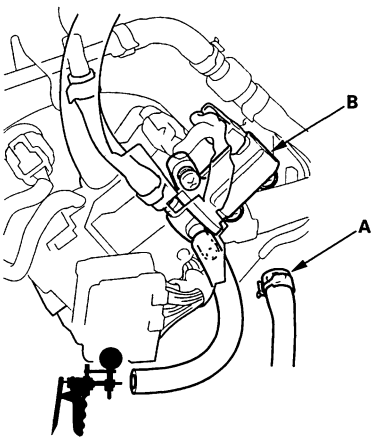


8. Install the intake air duct (air flow tube) (see step 16 on page 9-20).
9. Start the engine, and let it idle.

   *Is there vacuum?*

   **YES**—Go to step 10.

   **NO**—Go to step 16.
10. Turn the ignition switch OFF.
11. Jump the SCS line with the HDS.
12. Disconnect the EVAP canister purge valve 2P connector.

(cont'd)

Protected by AR



## DTC Troubleshooting (cont'd)

13. Check for continuity between EVAP canister purge valve 2P connector terminal No. 2 and body ground.

**EVAP CANISTER PURGE VALVE 2P CONNECTOR**

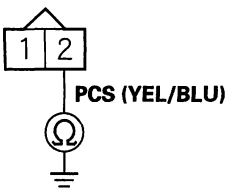


Wire side of female terminals

*Is there continuity?*

**YES**—Go to step 14.

**NO**—Go to step 39.

14. Disconnect PCM connector B (44P).

15. Check for continuity between EVAP canister purge valve 2P connector terminal No. 2 and body ground.

**EVAP CANISTER PURGE VALVE 2P CONNECTOR**

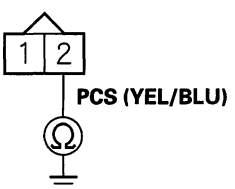


Wire side of female terminals

*Is there continuity?*

**YES**—Repair short in the wire between the EVAP canister purge valve and the PCM (B3), then go to step 40.

**NO**—Go to step 46.

16. Turn the ignition switch OFF.

17. Jump the SCS line with the HDS.

18. Disconnect the EVAP canister purge valve 2P connector.

19. Turn the ignition switch ON (II).

20. Measure voltage between EVAP canister purge valve 2P connector terminal No. 1 and body ground.

**EVAP CANISTER PURGE VALVE 2P CONNECTOR**

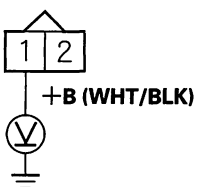


Wire side of female terminals

*Is there battery voltage?*

**YES**—Go to step 34.

**NO**—Go to step 21.



BACK

Protected by AR

21. Turn the ignition switch OFF.

22. Check the No. 11 LAF (15 A) fuse in the under-hood fuse/relay box.

    *Is the fuse OK?*

    **YES**—Go to step 23.

    **NO**—Go to step 29.

23. Remove the PGM-FI subrelay (E) from the under-hood fuse/relay box.

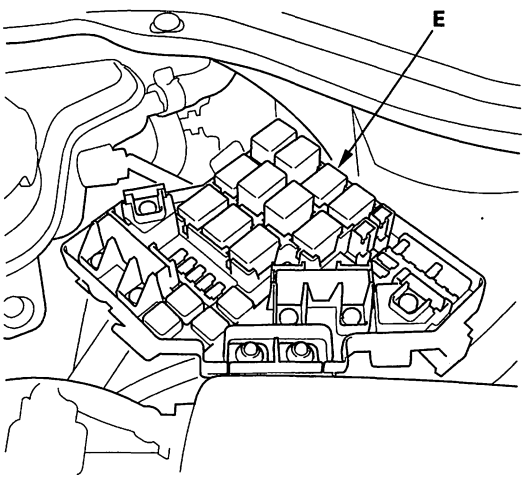


24. Test the PGM-FI subrelay.

    *Is the PGM-FI subrelay OK?*

    **YES**—Go to step 25.

    **NO**—Replace the PGM-FI subrelay, then go to step 40.

25. Connect EVAP canister purge valve 2P connector terminal No. 1 to body ground with a jumper wire.

**EVAP CANISTER PURGE VALVE 2P CONNECTOR**

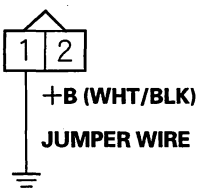


Wire side of female terminals

26. Check for continuity between PGM-FI subrelay 4P connector terminal No. 2 and body ground.

**PGM-FI SUBRELAY 4P CONNECTOR**

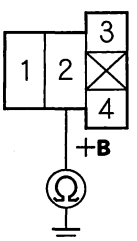


Terminal side of female terminals

*Is there continuity?*

**YES**—Go to step 27.

**NO**—Repair open in the wire between the EVAP canister purge valve and the PGM-FI subrelay, then go to step 40.

(cont'd)

Protected by AR



## DTC Troubleshooting (cont'd)

27. Disconnect PCM connector A (44P).

28. Check for continuity between PGM-FI subrelay 4P connector terminal No. 3 and PCM connector terminal A21.

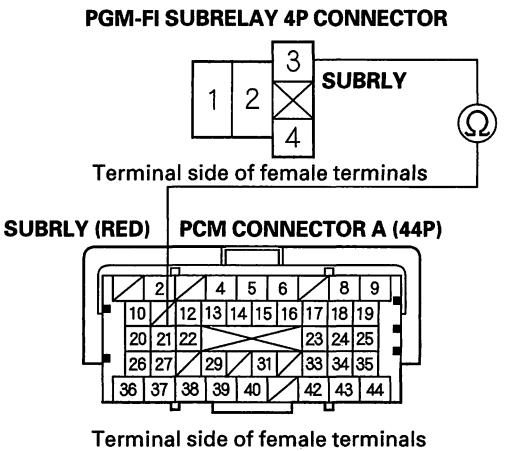


*Is there continuity?*

**YES**—Go to step 46.

**NO**—Repair open in the wire between the PCM (A21) and the PGM-FI subrelay, then go to step 40.

29. Remove the PGM-FI subrelay (E) from the under-hood fuse/relay box.

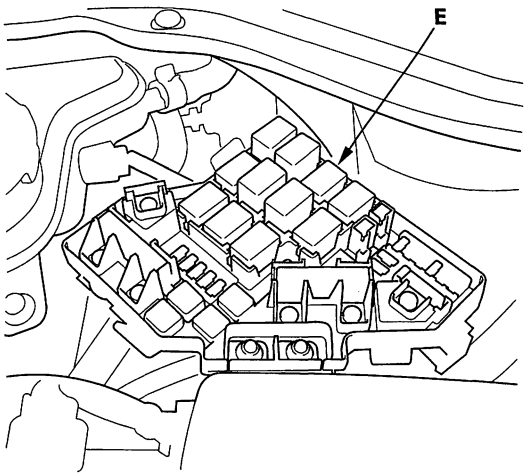


30. Disconnect the EVAP canister purge valve 2P connector.

31. Disconnect the A/F sensor (Sensor 1) 4P connector.

32. Disconnect the EVAP canister vent shut valve 2P connector.



BACK

Protected by AR

33. Check for continuity between EVAP canister purge valve 2P connector terminal No. 1 and body ground.

**EVAP CANISTER PURGE VALVE 2P CONNECTOR**

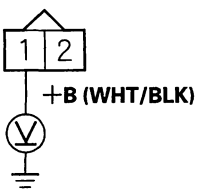


Wire side of female terminals

*Is there continuity?*

**YES**—Repair short in the wire between the PGM-FI subrelay, the EVAP canister purge valve, the EVAP canister vent shut valve, and the A/F sensor (Sensor 1). Also replace the No. 11 LAF (15 A) fuse, then go to step 40.

**NO**—Replace the under-hood fuse/relay box (see page 22-61), then go to step 40.

34. Turn the ignition switch OFF.

35. Jump the SCS line with the HDS.

36. Disconnect PCM connector B (44P).

37. Check for continuity between PCM connector terminal B3 and EVAP canister purge valve 2P connector terminal No. 2.

**EVAP CANISTER PURGE VALVE 2P CONNECTOR**

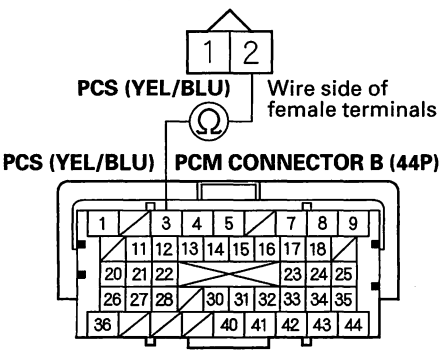


Terminal side of female terminals

*Is there continuity?*

**YES**—Go to step 38.

**NO**—Repair open in the wire between the EVAP canister purge valve and the PCM (B3), then go to step 40.

(cont'd)

Protected by AR



## DTC Troubleshooting (cont'd)

38. At the valve side, measure resistance between EVAP canister purge valve 2P connector terminals No. 1 and No. 2.

**EVAP CANISTER PURGE VALVE 2P CONNECTOR**

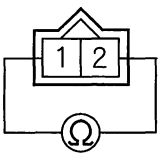


Terminal side of male terminals

*Is there about 20 Ω at room temperature?*

**YES**—Go to step 46.

**NO**—Go to step 39.

39. Replace the EVAP canister purge valve (see page 11-486).

40. Reconnect all connectors.

41. Turn the ignition switch ON (II).

42. Reset the PCM with the HDS.

43. Do the PCM idle learn procedure (see page 11-339).

44. Check for Temporary DTCs or DTCs with the HDS.

*Is DTC P0443 indicated?*

**YES**—Check for poor connections or loose terminals at the EVAP canister purge valve and the PCM, then go to step 1.

**NO**—Go to step 45.

45. Monitor the OBD STATUS for DTC P0443 in the DTCs MENU with the HDS.

*Does the screen indicate PASSED?*

**YES**—Troubleshooting is complete. If any other Temporary DTCs or DTCs were indicated in step 44, go to the indicated DTC's troubleshooting. ■

**NO**—If the screen indicates FAILED, check for poor connections or loose terminals at the EVAP canister purge valve and the PCM, then go to step 1. If the screen indicates EXECUTING or OUT OF CONDITION, keep idling until a result comes on.

46. Reconnect all connectors.

47. Update the PCM if it does not have the latest software (see page 11-7), or substitute a known-good PCM (see page 11-8).

48. Start the engine, and let it idle.

49. Check for Temporary DTCs or DTCs with the HDS.

*Is DTC P0443 indicated?*

**YES**—Check for poor connections or loose terminals at the EVAP canister purge valve and the PCM. If the PCM was updated, substitute a known-good PCM (see page 11-8), then go to step 48. If the PCM was substituted, go to step 1.

**NO**—Go to step 50.



BACK

Protected by AR

50. Monitor the OBD STATUS for DTC P0443 in the DTCs MENU with the HDS.

    *Does the screen indicate PASSED?*

    **YES**—If the PCM was updated, troubleshooting is complete. If the PCM was substituted, replace the original PCM (see page 11-252). If any other Temporary DTCs or DTCs were indicated in step 49, go to the indicated DTC's troubleshooting. ■

    **NO**—If the screen indicates FAILED, check for poor connections or loose terminals at the EVAP canister purge valve and the PCM. If the PCM was updated, substitute a known-good PCM (see page 11-8), then go to step 48. If the PCM was substituted, go to step 1. If the screen indicates EXECUTING or OUT OF CONDITION, keep idling until a result comes on.

Protected by AR



## DTC Troubleshooting (cont'd)

### DTC P0451: FTP Sensor Circuit Range/ Performance Problem

NOTE:
- Before you troubleshoot, record all freeze data and any on-board snapshot, and review the general troubleshooting information (see page 11-3).
- If DTC P2422 is stored at the same time as DTC P0451, troubleshoot DTC P2422 first, then recheck for DTC P0451.

1. Turn the ignition switch ON (II).
2. Clear the DTC with the HDS.
3. Start the engine, and let it idle without load (in Park or neutral) until the radiator fan comes on.
4. Monitor the OBD STATUS for DTC P0451 in the DTCs MENU with the HDS.

   *Does the screen indicate FAILED?*

   **YES**—Go to step 5.

   **NO**—If the screen indicates PASSED, intermittent failure, the system is OK at this time. Check for poor connections or loose terminals at the FTP sensor and the PCM. If the screen indicates NOT COMPLETED, keep idling until a result comes on.
5. Turn the ignition switch OFF.
6. Replace the FTP sensor (see page 11-485).
7. Turn the ignition switch ON (II).
8. Reset the PCM with the HDS.
9. Do the PCM idle learn procedure (see page 11-339).
10. Start the engine, and let it idle without load (in Park or neutral) until the radiator fan comes on.
11. Check for Temporary DTCs or DTCs with the HDS.

    *Is DTC P0451 indicated?*

    **YES**—Check for poor connections or loose terminals at the FTP sensor and the PCM, then go to step 1.

    **NO**—Go to step 12.
12. Monitor the OBD STATUS for DTC P0451 in the DTCs MENU with the HDS.

    *Does the screen indicate PASSED?*

    **YES**—Troubleshooting is complete. If any other Temporary DTCs or DTCs were indicated in step 11, go to the indicated DTC's troubleshooting. ■

    **NO**—If the screen indicates FAILED, check for poor connections or loose terminals at the FTP sensor and the PCM, then go to step 1. If the screen indicates NOT COMPLETED, keep idling until a result comes on.



BACK

Protected by AR

## **DTC P0452:** FTP Sensor Circuit Low Voltage

NOTE: Before you troubleshoot, record all freeze data and any on-board snapshot, and review the general troubleshooting information (see page 11-3).

1. Turn the ignition switch ON (II).
2. Clear the DTC with the HDS.
3. Turn the ignition switch OFF.
4. Remove the fuel fill cap.
5. Turn the ignition switch ON (II).
6. Check the FTP SENSOR in the DATA LIST with the HDS.

   *Is about −7.3 kPa (−2.16 in.Hg, −55 mmHg), or 0.3 V or less indicated?*

   **YES**—Go to step 10.

   **NO**—Go to step 7.
7. Install the fuel fill cap.
8. Start the engine.
9. Monitor the OBD STATUS for DTC P0452 in the DTCs MENU with the HDS.

   *Does the screen indicate FAILED?*

   **YES**—Go to step 10.

   **NO**—If the screen indicates PASSED, intermittent failure, the system is OK at this time. Check for poor connections or loose terminals at the FTP sensor and the PCM. If the screen indicates NOT COMPLETED, go to step 4 and recheck.
10. Turn the ignition switch OFF.
11. Disconnect the FTP sensor 3P connector.
12. Turn the ignition switch ON (II).
13. Check the FTP SENSOR in the DATA LIST with the HDS.

    *Is about −7.3 kPa (−2.16 in.Hg, −55 mmHg) or 0.3 V or more indicated?*

    **YES**—Go to step 20.

    **NO**—Go to step 14.
14. Measure voltage between FTP sensor 3P connector terminal No. 1 and body ground.

**FTP SENSOR 3P CONNECTOR**

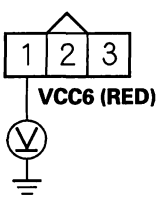


Wire side of female terminals

*Is there about 5 V?*

**YES**—Go to step 24.

**NO**—Go to step 15.

(cont'd)

Protected by AR



## DTC Troubleshooting (cont'd)

15. Turn the ignition switch OFF.
16. Jump the SCS line with the HDS.
17. Disconnect PCM connector A (44P).
18. Connect FTP sensor 3P connector terminal No. 1 to body ground with a jumper wire.

**FTP SENSOR 3P CONNECTOR**

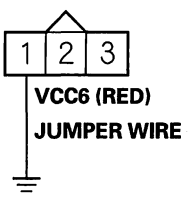


Wire side of female terminals

19. Check for continuity between PCM connector terminal A19 and body ground.

**PCM CONNECTOR A (44P)**

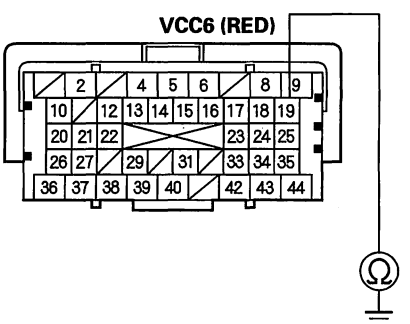


Terminal side of female terminals

*Is there continuity?*

**YES**—Go to step 32.

**NO**—Repair open in the wire between the PCM (A19) and the FTP sensor, then go to step 26.

20. Turn the ignition switch OFF.
21. Jump the SCS line with the HDS.
22. Disconnect PCM connector A (44P).
23. Check for continuity between FTP sensor 3P connector terminal No. 2 and body ground.

**FTP SENSOR 3P CONNECTOR**

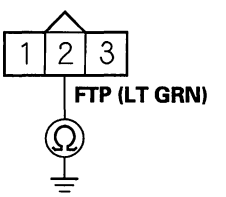


Wire side of female terminals

*Is there continuity?*

**YES**—Repair short in the wire between the PCM (A26) and the FTP sensor, then go to step 26.

**NO**—Go to step 32.



BACK

Protected by AR

24. Turn the ignition switch OFF.

25. Replace the FTP sensor (see page 11-485).

26. Reconnect all connectors.

27. Turn the ignition switch ON (II).

28. Reset the PCM with the HDS.

29. Do the PCM idle learn procedure (see page 11-339).

30. Check for Temporary DTCs or DTCs with the HDS.

    *Is DTC P0452 indicated?*

    **YES**—Check for poor connections or loose terminals at the FTP sensor and the PCM, then go to step 1.

    **NO**—Go to step 31.

31. Monitor the OBD STATUS for DTC P0452 in the DTCs MENU with the HDS.

    *Does the screen indicate PASSED?*

    **YES**—Troubleshooting is complete. If any other Temporary DTCs or DTCs were indicated in step 30, go to the indicated DTC's troubleshooting.■

    **NO**—If the screen indicates FAILED, go to step 32. If the screen indicates NOT COMPLETED keep idling until a result comes on.

32. Reconnect all connectors.

33. Update the PCM if it does not have the latest software (see page 11-7). or substitute a known-good PCM (see page 11-8).

34. Start the engine, and let it idle.

35. Check for Temporary DTCs or DTCs with the HDS.

    *Is DTC P0452 indicated?*

    **YES**—Check for poor connections or loose terminals at the FTP sensor and the PCM. If the PCM was updated, substitute a known-good PCM (see page 11-8), then go to step 34. If the PCM was substituted, go to step 1.

    **NO**—Go to step 36.

36. Monitor the OBD STATUS for DTC P0452 in the DTCs MENU with the HDS.

    *Does the screen indicate PASSED?*

    **YES**—If the PCM was updated, troubleshooting is complete. If the PCM was substituted, replace the original PCM (see page 11-252). If any other Temporary DTCs or DTCs were indicated in step 35, go to the indicated DTC's troubleshooting.■

    **NO**—If the screen indicates FAILED, check for poor connections or loose terminals at the FTP sensor and the PCM. If the PCM was updated, substitute a known-good PCM (see page 11-8), then go to step 34. If the PCM was substituted, go to step 1. If the screen indicates NOT COMPLETED, keep idling until a result comes on.

Protected by AR



## DTC Troubleshooting (cont'd)

### DTC P0453: FTP Sensor Circuit High Voltage

NOTE: Before you troubleshoot, record all freeze data and any on-board snapshot, and review the general troubleshooting information (see page 11-3).

1. Turn the ignition switch ON (II).
2. Clear the DTC with the HDS.
3. Turn the ignition switch OFF.
4. Remove the fuel fill cap.
5. Turn the ignition switch ON (II).
6. Check the FTP SENSOR in the DATA LIST with the HDS.

   *Is about 7.3 kPa (2.16 in.Hg, 55 mmHg), or 4.7 V or more indicated?*

   **YES**—Go to step 10.

   **NO**—Go to step 7.
7. Install the fuel fill cap.
8. Start the engine, and let it idle.
9. Monitor the OBD STATUS for DTC P0453 in the DTCs MENU with the HDS.

   *Does the screen indicate FAILED?*

   **YES**—Go to step 10.

   **NO**—If the screen indicates PASSED, intermittent failure, the system is OK at this time. Check for poor connections or loose terminals at the FTP sensor and the PCM. If the screen indicates NOT COMPLETED, go to step 3 and recheck.
10. Turn the ignition switch OFF.
11. Disconnect the FTP sensor 3P connector.
12. Connect FTP sensor 3P connector terminals No. 2 and No. 3 with a jumper wire.

**FTP SENSOR 3P CONNECTOR**

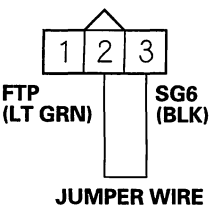


Wire side of female terminals

13. Turn the ignition switch ON (II).
14. Check the FTP SENSOR in the DATA LIST with the HDS.

    *Is about 7.3 kPa (2.16 in.Hg, 55 mmHg), or 4.7 V or more indicated?*

    **YES**—Go to step 15.

    **NO**—Go to step 26.
15. Measure voltage between FTP sensor 3P connector terminals No. 1 and No. 3.

**FTP SENSOR 3P CONNECTOR**

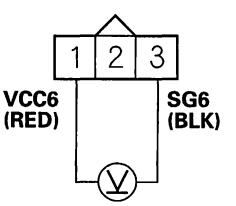


Wire side of female terminals

*Is there about 5 V?*

**YES**—Go to step 21.

**NO**—Go to step 16.



BACK

Protected by AR

16. Turn the ignition switch OFF.
17. Jump the SCS line with the HDS.
18. Disconnect PCM connector A (44P).
19. Connect FTP sensor 3P connector terminal No. 3 to body ground with a jumper wire.

**FTP SENSOR 3P CONNECTOR**

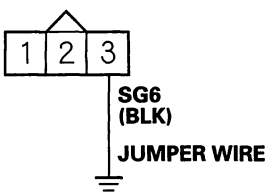


Wire side of female terminals

20. Check for continuity between PCM connector terminal A9 and body ground.

**PCM CONNECTOR A (44P)**

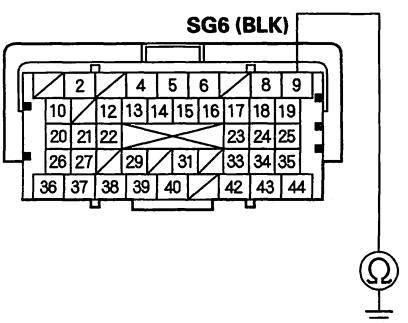


Terminal side of female terminals

*Is there continuity?*

**YES**—Go to step 34.

**NO**—Repair open in the wire between the PCM (A9) and the FTP sensor, then go to step 28.

21. Turn the ignition switch OFF.
22. Jump the SCS line with the HDS.
23. Disconnect PCM connector A (44P).
24. Connect FTP sensor 3P connector terminal No. 2 to body ground with a jumper wire.

**FTP SENSOR 3P CONNECTOR**

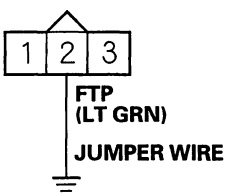


Wire side of female terminals

25. Check for continuity between PCM connector terminal A26 and body ground.

**PCM CONNECTOR A (44P)**

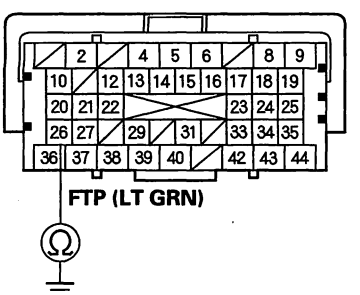


Terminal side of female terminals

*Is there continuity?*

**YES**—Go to step 34.

**NO**—Repair open in the wire between the PCM (A26) and the FTP sensor, then go to step 28.

(cont'd)

Protected by AR



## DTC Troubleshooting (cont'd)

26. Turn the ignition switch OFF.

27. Replace the FTP sensor (see page 11-485).

28. Reconnect all connectors.

29. Turn the ignition switch ON (II).

30. Reset the PCM with the HDS.

31. Do the PCM idle learn procedure (see page 11-339).

32. Check for Temporary DTCs or DTCs with the HDS.

    *Is DTC P0453 indicated?*

    **YES**—Check for poor connections or loose terminals at the FTP sensor and the PCM, then go to step 1.

    **NO**—Go to step 33.

33. Monitor the OBD STATUS for DTC P0453 in the DTCs MENU with the HDS.

    *Does the screen indicate PASSED?*

    **YES**—Troubleshooting is complete. If any other Temporary DTCs were indicated in step 32, go to the indicated DTC's troubleshooting.■

    **NO**—If the screen indicates FAILED, check for poor connections or loose terminals at the FTP sensor and the PCM, then go to step 1. If the screen indicates NOT COMPLETED, keep idling until a result comes on.

34. Reconnect all connectors.

35. Update the PCM if it does not have the latest software (see page 11-7), or substitute a known-good PCM (see page 11-8).

36. Start the engine, and let it idle.

37. Check for Temporary DTCs or DTCs with the HDS.

    *Is DTC P0453 indicated?*

    **YES**—Check for poor connections or loose terminals at the FTP sensor and the PCM. If the PCM was updated, substitute a known-good PCM (see page 11-8), then go to step 36. If the PCM was substituted, go to step 1.

    **NO**—Go to step 38.

38. Monitor the OBD STATUS for DTC P0453 in the DTCs MENU with the HDS.

    *Does the screen indicate PASSED?*

    **YES**—If the PCM was updated, troubleshooting is complete. If the PCM was substituted, replace the original PCM (see page 11-252). If any other Temporary DTCs were indicated in step 37, go to the indicated DTC's troubleshooting.■

    **NO**—If the screen indicates FAILED, check for poor connections or loose terminals at the FTP sensor and the PCM. If the PCM was updated, substitute a known-good PCM (see page 11-8), then go to step 36. If the PCM was substituted, go to step 1. If the screen indicates NOT COMPLETED, keep idling until a result comes on.



BACK

Protected by AR

## DTC P0455: EVAP System Large Leak Detected

## DTC P0456: EVAP System Very Small Leak Detected

**NOTICE**

The fuel system is designed to allow specified maximum vacuum and pressure conditions. Do not deviate from the vacuum and pressure tests as indicated in these procedures. Excessive pressure/vacuum would damage the EVAP components or cause eventual fuel tank failure.

**Special Tools Required**

Vacuum pump/gauge, 0—30 in.Hg, Snap-on YA4000A or equivalent, commercially available

NOTE:

- Before you troubleshoot, record all freeze data and any on-board snapshot, and review the general troubleshooting information (see page 11-3).
- Fresh fuel has a higher volatility that will create greater pressure/vacuum. The optimum condition for testing is less than a full tank of fresh fuel. If possible, to assist in leak detection, add 1 gallon of fresh fuel to the tank (as long as it will not fill the tank), just before starting these procedures.

1. Check the fuel fill cap (the cap must say "Tighten to click"). It should turn 1/4 turn after it's tight, then it clicks.

   *Is the correct fuel fill cap installed and properly tightened?*

   **YES**—Go to step 2.

   **NO**—Replace or tighten the cap, then go to step 23.

2. Check the fuel fill cap seal (A) and the fuel fill pipe mating surface (B). Verify that the fuel fill cap tether cord (C) is not caught under the cap.

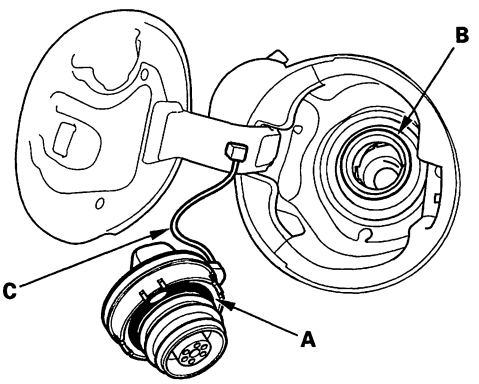


   *Is the fuel fill cap seal missing or damaged, is the fuel fill pipe damaged, or is the tether cord caught under the cap?*

   **YES**—Replace the fuel fill cap or the fuel fill pipe, then go to step 23.

   **NO**—Go to step 3.

3. Turn the ignition switch ON (II).

4. Clear the DTC with the HDS.

5. Select the EVAP FUNCTION TEST in the INSPECTION MENU with the HDS.

   *Is the result OK?*

   **YES**—Intermittent failure, the system is OK at this time. Check for poor connections or loose terminals at the FTP sensor, the EVAP canister purge valve, or the EVAP canister vent shut valve, and the PCM. ■

   **NO**—Go to step 6.

(cont'd)

Protected by AR



## DTC Troubleshooting (cont'd)

6. Turn the ignition switch OFF.

7. Check for a poor connection or damage at the fuel tank vapor recirculation tube.

   *Is the tube OK?*

   **YES**—Go to step 8.

   **NO**—
   - Replace the fuel tank vapor recirculation tube, then go to step 23.
   - If necessary, replace the fuel tank (see page 11-385), then go to step 23.

8. Disconnect the fuel tank vapor recirculation tube (A) from the EVAP canister (B), and plug the EVAP canister port (C).

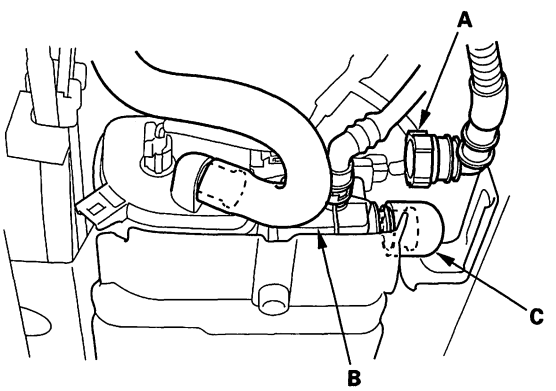


9. Remove the intake air duct (air flow tube) (see step 19 on page 9-16).

10. Disconnect the vacuum hose (purge line) (A) from the EVAP canister purge valve (B) in the engine compartment, and connect a vacuum pump/gauge, 0—30 in.Hg, to the vacuum hose as shown.

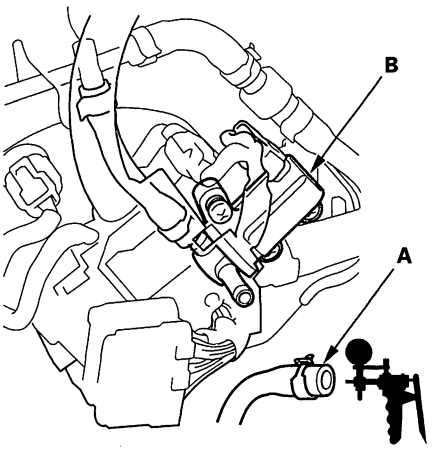


11. Turn the ignition switch ON (II).

12. Select EVAP CVS ON in the INSPECTION MENU with the HDS.

13. Apply vacuum to the hose until the FTP reads 1.90 V (—0.59 in.Hg, —15.1 mmHg).

    NOTE: Be careful not to exceed the pressure. If you exceed the pressure, the FTP sensor can be damaged.

14. Monitor the FTP SENSOR in the DATA LIST for 1 minute with the HDS.

    *Does the voltage increase more than 0.2 V (0.1 in.Hg, 0.5 mmHg)?*

    **YES**—Go to step 15.

    **NO**—Go to step 20.



BACK

Protected by AR

15. Select EVAP CVS OFF in the INSPECTION MENU with the HDS.

16. Disconnect the fresh air hose (A) from the EVAP canister (B), and plug the EVAP canister port (C).

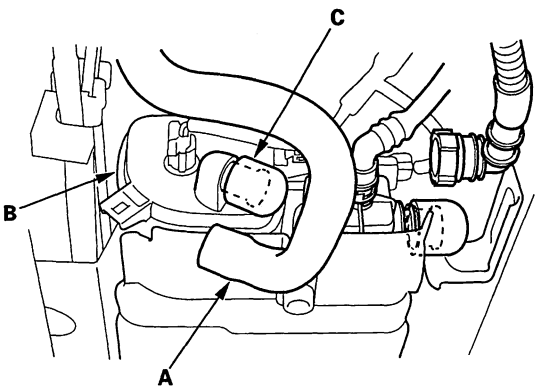


17. Apply vacuum to the EVAP system until the FTP reads 1.90 V (—0.59 in.Hg, —15.1 mmHg).

    NOTE: Be careful not to exceed the pressure. If you exceed the pressure, the FTP sensor can be damaged.

18. Monitor the FTP SENSOR in the DATA LIST for 1 minute with the HDS.

    *Does the voltage increase more than 0.2 V (0.1 in.Hg, 2.5 mmHg)?*

    **YES**—Go to step 19.

    **NO**—Replace the EVAP canister vent shut valve, then go to step 22.

19. Check for a loose or damaged EVAP canister purge line between the EVAP canister and the EVAP canister purge valve.

    *Is the line OK?*

    **YES**—Replace these parts, then go to step 22:

    - FTP sensor O-ring
    - EVAP canister vent shut valve case and O-ring
    - EVAP canister

    **NO**—Reconnect or repair the EVAP canister purge hose, then go to step 22.

20. Select EVAP CVS OFF in the INSPECTION MENU with the HDS.

21. Check these parts for looseness or damage:

    - Fuel fill pipe
    - Fuel vapor return pipe

    *Are the parts OK?*

    **YES**—Check the fuel tank unit base gasket (see page 11-381), and check the fuel tank, then go to step 22.

    **NO**—Repair or replace the damaged parts, then go to step 22.

22. Reconnect all hoses and connectors, and reinstall all parts.

23. Turn the ignition switch ON (II).

24. Reset the PCM with the HDS.

25. Do the PCM idle learn procedure (see page 11-339).

26. Select the EVAP FUNCTION TEST in the INSPECTION MENU with the HDS.

    *Is the result OK?*

    **YES**—Troubleshooting is complete.■

    **NO**—Check for poor connections or loose terminals at the FTP sensor, the EVAP canister purge valve, the EVAP canister vent shut valve, and the PCM, then go to step 1.

Protected by AR



## DTC Troubleshooting (cont'd)

### DTC P0457: EVAP System Leak Detected/Fuel Fill Cap Loose or Missing

NOTE: Before you troubleshoot, record all freeze data and any on-board snapshot, and review the general troubleshooting information (see page 11-3).

1. Check the fuel fill cap (the cap must say "Tighten to click"). It should turn 1/4 turn after it's tight, then it clicks.

   *Is the correct fuel fill cap installed and properly tightened?*

   **YES**—Go to step 2.

   **NO**—Replace or tighten the cap, then go to step 19.

2. Check the fuel fill cap seal (A) and the fuel fill pipe mating surface (B). Verify that the fuel fill cap tether cord (C) is not caught under the cap.

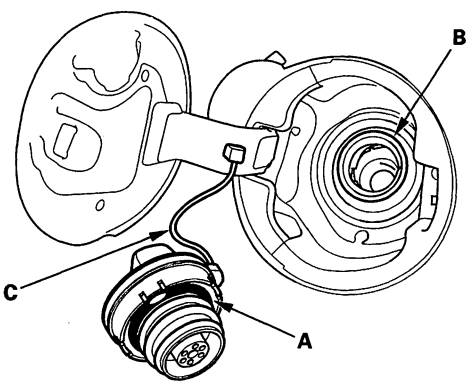


   *Is the fuel fill cap seal missing or damaged, is the fuel fill pipe damaged, or is the tether cord caught under the cap?*

   **YES**—Replace the fuel fill cap or the fuel fill pipe, then go to step 19.

   **NO**—Go to step 3.

3. Turn the ignition switch ON (II).

4. Clear the DTC with the HDS.

5. Select the EVAP FUNCTION TEST in the INSPECTION MENU with the HDS.

   *Is the result OK?*

   **YES**—Intermittent failure, the system is OK at this time. Check for poor connections or loose terminals at the FTP sensor, or the EVAP canister vent shut valve, and the PCM. ■

   **NO**—Go to step 6.

6. Turn the ignition switch OFF.

7. Remove the EVAP canister vent shut valve from the EVAP canister (see page 11-487).

8. Connect the 2P connector to the EVAP canister vent shut valve.

9. Turn the ignition switch ON (II).

10. Select EVAP CVS ON in the INSPECTION MENU with the HDS.

11. Check the EVAP canister vent shut valve (A) operation.

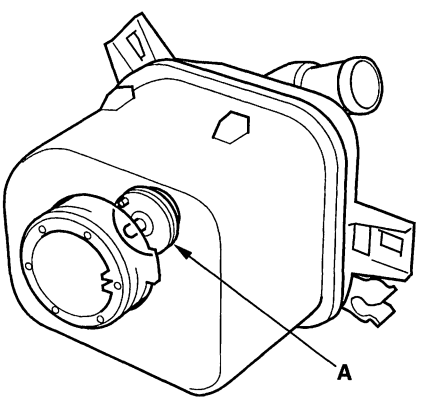


   *Does the valve operate?*

   **YES**—Check the routing of the EVAP canister vent tube, then go to step 18.

   **NO**—Go to step 12.



BACK

Protected by AR

12. Turn the ignition switch OFF.

13. Replace the EVAP canister vent shut valve (see page 11-487).

14. Turn the ignition switch ON (II).

15. Reset the PCM with the HDS.

16. Do the PCM idle learn procedure (see page 11-339).

17. Select the EVAP FUNCTION TEST in the INSPECTION MENU with the HDS.

    *Is the result OK?*

    **YES**—Troubleshooting is complete.■

    **NO**—Check for poor connections or loose terminals at the FTP sensor, the EVAP canister vent shut valve, and the PCM, then go to step 1.

18. Reinstall the EVAP canister vent shut valve.

19. Turn the ignition switch ON (II).

20. Reset the PCM with the HDS.

21. Do the PCM idle learn procedure (see page 11-339).

22. Select the EVAP FUNCTION TEST in the INSPECTION MENU with the HDS.

    *Is the result OK?*

    **YES**—Troubleshooting is complete.■

    **NO**—Check for poor connections or loose terminals at the FTP sensor, the EVAP canister vent shut valve, and the PCM, then go to step 1.

Protected by AR



## DTC Troubleshooting (cont'd)

### DTC P0496: EVAP System High Purge Flow Detected

NOTE: Before you troubleshoot, record all freeze data and any on-board snapshot, and review the general troubleshooting information (see page 11-3).

1. Turn the ignition switch ON (II).
2. Clear the DTC with the HDS.
3. Select the EVAP FUNCTION TEST in the INSPECTION MENU with the HDS.

   *Is the result OK?*

   **YES**—Intermittent failure, the system is OK at this time. Check for poor connections or loose terminals at the FTP sensor, the EVAP canister purge valve, the EVAP canister vent shut valve, and the PCM. ■

   **NO**—Go to step 4.
4. Turn the ignition switch OFF.
5. Replace the EVAP canister purge valve (see page 11-486).
6. Turn the ignition switch ON (II).
7. Reset the PCM with the HDS.
8. Do the PCM idle learn procedure (see page 11-339).
9. Select the EVAP FUNCTION TEST in the INSPECTION MENU with the HDS.

   *Is the result OK?*

   **YES**—Troubleshooting is complete. ■

   **NO**—Check for poor connections or loose terminals at the FTP sensor, the EVAP canister purge valve, the EVAP canister vent shut valve, and the PCM, then go to step 1.



BACK

Protected by AR

## **DTC P0497:** EVAP System Low Purge Flow Detected

**Special Tools Required**
- Vacuum/pressure gauge, 0—4 in.Hg 07JAZ-001000B
- Vacuum pump/gauge, 0—30 in.Hg, Snap-on YA4000A or equivalent, commercially available

NOTE: Before you troubleshoot, record all freeze data and any on-board snapshot, and review the general troubleshooting information (see page 11-3).

1. Turn the ignition switch ON (II).

2. Clear the DTC with the HDS.

3. Select the EVAP FUNCTION TEST in the INSPECTION MENU with the HDS.

   *Is the result OK?*

   **YES**—Intermittent failure, the system is OK at this time. Check for poor connections or loose terminals at the FTP sensor and the PCM.■

   **NO**—Go to step 4.

4. Check for poor connection, blockage, or damage at the EVAP canister purge line between the throttle body and EVAP canister.

   *Is the line OK?*

   **YES**—Go to step 5.

   **NO**—Reconnect or repair the EVAP canister purge line, then go to step 26.

5. Remove the intake air duct (air flow tube) (see step 19 on page 9-16).

6. Disconnect the vacuum hose (A) from the EVAP canister purge valve (B).

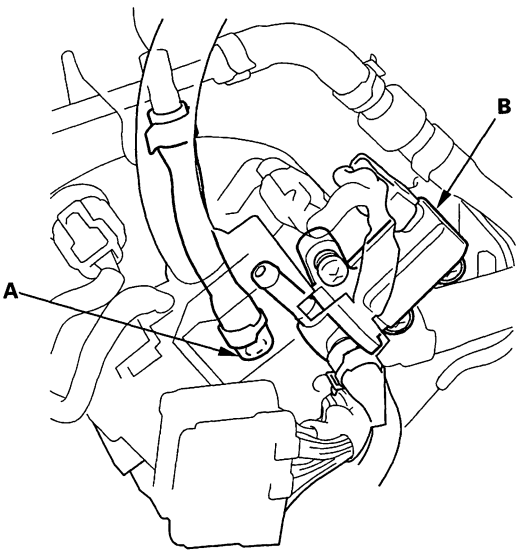


(cont'd)

Protected by AR



## DTC Troubleshooting (cont'd)

7. Disconnect the vacuum hose from the purge line (at the EVAP canister side), and connect a T-fitting (A) from the vacuum gauge and the vacuum pump/ gauge, 0—30 in.Hg, to the hose as shown.

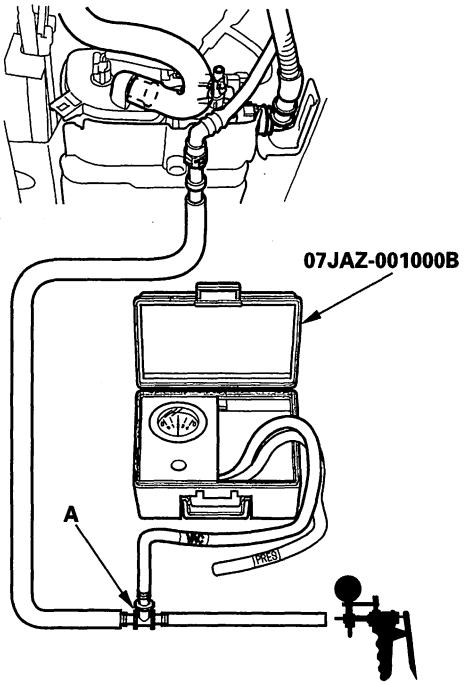


8. Apply about 2 kPa (0.6 in.Hg, 15 mmHg) of vacuum to the hose.

9. Select EVAP PCS ON in the INSPECTION MENU with the HDS.

   *Does the vacuum release immediately?*

   **YES**—Go to step 14.

   **NO**—Go to step 10.

10. Select EVAP PCS OFF in the INSPECTION MENU with the HDS.

11. Disconnect the vacuum hose (A) from the EVAP canister purge valve (B). Connect a T-fitting (C) from the vacuum gauge and the vacuum pump/ gauge, 0—30 in.Hg, to the EVAP canister purge valve as shown.

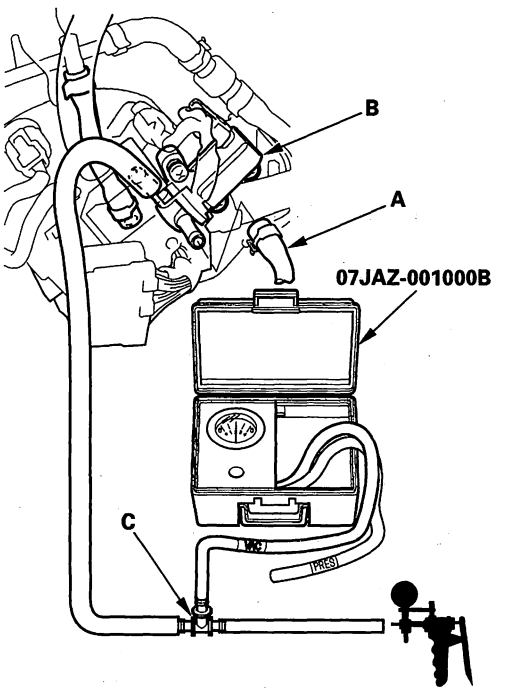


12. Apply about 2 kPa (0.6 in.Hg, 15 mmHg) of vacuum to the hose.

13. Select EVAP PCS ON in the INSPECTION MENU with the HDS.

    *Does the vacuum release immediately?*

    **YES**—Check for blockage in the vacuum hose between the EVAP canister purge valve and the EVAP canister, then go to step 26.

    **NO**—Replace the EVAP canister purge valve (see page 11-486), then go to step 26.



BACK

Protected by AR

14. Connect the vacuum pump/gauge, 0—30 in.Hg, to the vacuum hose (A) as shown.

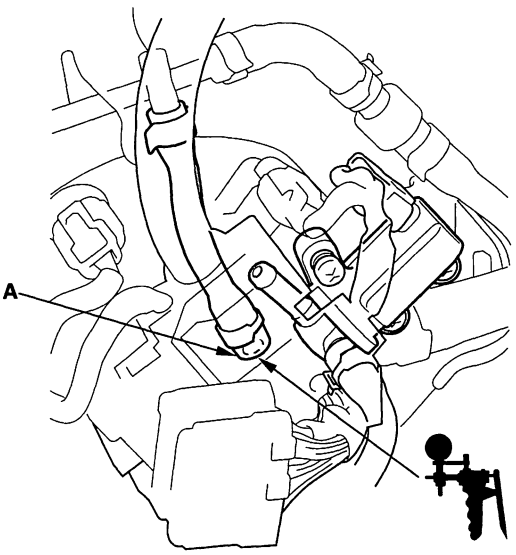


15. Reinstall the intake air duct (air flow tube). Start the engine, and let it idle.

    *Is there vacuum?*

    **YES**—Go to step 18.

    **NO**—Go to step 16.

16. Turn the ignition switch OFF.

17. Inspect non-return valve A (see page 11-488).

    *Is the valve OK?*

    **YES**—Check for blockage at the EVAP purge line between the throttle body and EVAP canister purge valve, then go to step 26.

    **NO**—Replace non-return valve A (see page 11-488), then go to step 26.

18. Turn the ignition switch OFF.

19. Remove the FTP sensor with its connector connected (see page 11-485).

20. Connect a T-fitting (A) from the vacuum pump/gauge, 0—30 in.Hg, and the vacuum pump to the FTP sensor (B) as shown.

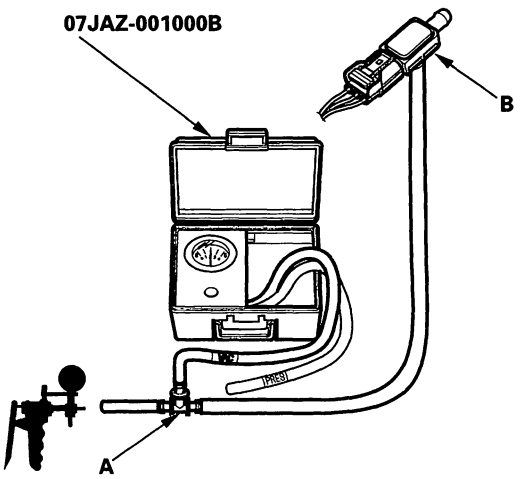


21. Turn the ignition switch ON (II).

22. Check and record the FTP SENSOR reading in the DATA LIST with the HDS.

23. Slowly apply about 1.3 kPa (0.4 in.Hg, 10 mmHg) of vacuum to the hose.

24. Check the FTP SENSOR in the DATA LIST with the HDS.

    *Does the value change?*

    **YES**—Check for debris or blockage at the FTP sensor port and at the EVAP canister, then go to step 26.

    **NO**—Go to step 25.

(cont'd)

Protected by AR



## DTC Troubleshooting (cont'd)

25. Replace the FTP sensor (see page 11-485).

26. Reconnect all hoses.

27. Turn the ignition switch ON (II).

28. Reset the PCM with the HDS.

29. Do the PCM idle learn procedure (see page 11-339).

30. Select the EVAP FUNCTION TEST in the INSPECTION MENU with the HDS.

    *Is the result OK?*

    **YES**—Troubleshooting is complete.■

    **NO**—Check for poor connections or loose terminals at the FTP sensor and the PCM, then go to step 1.



BACK

Protected by AR

## **DTC P0498:** EVAP Canister Vent Shut Valve Circuit Low Voltage

NOTE: Before you troubleshoot, record all freeze data and any on-board snapshot, and review the general troubleshooting information (see page 11-3).

1. Turn the ignition switch ON (II).
2. Clear the DTC with the HDS.
3. Check for Temporary DTCs or DTCs with the HDS.

   *Is DTC P0498 indicated?*

   **YES**—Go to step 6.

   **NO**—Go to step 4.

4. Select EVAP CVS ON in the INSPECTION MENU with the HDS.
5. Check for Temporary DTCs or DTCs with the HDS.

   *Is DTC P0498 indicated?*

   **YES**—Go to step 6.

   **NO**—Intermittent failure, the system is OK at this time. Check for poor connections or loose terminals at the EVAP canister vent shut valve and the PCM. ■

6. Turn the ignition switch OFF.
7. Disconnect the EVAP canister vent shut valve 2P connector.
8. Turn the ignition switch ON (II).
9. Measure voltage between EVAP canister vent shut valve 2P connector terminal No. 2 and body ground.

**EVAP CANISTER VENT SHUT VALVE 2P CONNECTOR**

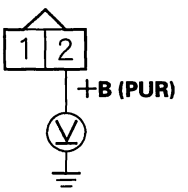


Wire side of female terminals

*Is there battery voltage?*

**YES**—Go to step 10.

**NO**—Repair open in the wire between the EVAP canister vent shut valve and the PGM-FI subrelay, then go to step 18.

10. Turn the ignition switch OFF.
11. Measure resistance between EVAP canister vent shut valve 2P connector terminals No. 1 and No. 2.

**EVAP CANISTER VENT SHUT VALVE 2P CONNECTOR**

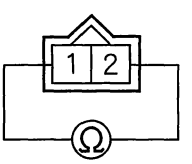


Terminal side of male terminals

*Is there about 25—30 Ω at room temperature?*

**YES**—Go to step 12.

**NO**—Go to step 17.

(cont'd)

Protected by AR



## DTC Troubleshooting (cont'd)

12. Jump the SCS line with the HDS.

13. Disconnect PCM connector A (44P).

14. Check for continuity between PCM connector terminal A10 and body ground.

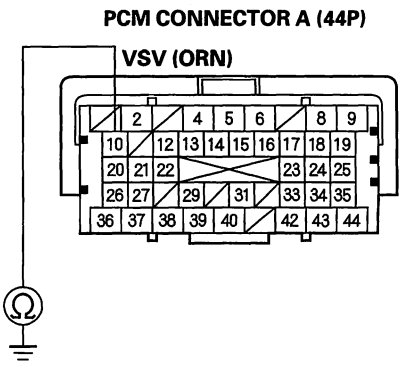


Terminal side of female terminals

*Is there continuity?*

**YES**—Repair short in the wire between the EVAP canister vent shut valve and the PCM (A10), then go to step 18.

**NO**—Go to step 15.

15. Connect EVAP canister vent shut valve 2P connector terminal No. 1 to body ground with a jumper wire.

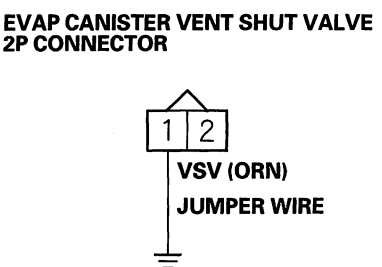


Wire side of female terminals

16. Check for continuity between PCM connector terminal A10 and body ground.

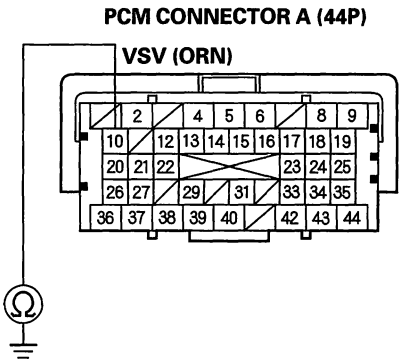


Terminal side of female terminals

*Is there continuity?*

**YES**—Go to step 25.

**NO**—Repair open in the wire between the EVAP canister vent shut valve and the PCM (A10), then go to step 18.

17. Replace the EVAP canister vent shut valve (see page 11-487).

18. Reconnect all connectors.



BACK

Protected by AR

19. Turn the ignition switch ON (II).

20. Reset the PCM with the HDS.

21. Do the PCM idle learn procedure (see page 11-339).

22. Select EVAP CVS ON in the INSPECTION MENU with the HDS.

23. Check for Temporary DTCs or DTCs with the HDS.

    *Is DTC P0498 indicated?*

    **YES**—Check for poor connections or loose terminals at the EVAP canister vent shut valve and the PCM, then go to step 1.

    **NO**—Go to step 24.

24. Monitor the OBD STATUS for DTC P0498 in the DTCs MENU with the HDS.

    *Does the screen indicate PASSED?*

    **YES**—Troubleshooting is complete. If any other Temporary DTCs or DTCs were indicated in step 23, go to the indicated DTC's troubleshooting.■

    **NO**—If the screen indicates FAILED, check for poor connections or loose terminals at the EVAP canister vent shut valve and the PCM, then go to step 1. If the screen indicates NOT COMPLETED, go to step 22.

25. Reconnect all connectors.

26. Update the PCM if it does not have the latest software (see page 11-7), or substitute a known-good PCM (see page 11-8).

27. Select EVAP CVS ON in the INSPECTION MENU with the HDS.

28. Check for Temporary DTCs or DTCs with the HDS.

    *Is DTC P0498 indicated?*

    **YES**—Check for poor connections or loose terminals at the EVAP canister vent shut valve and the PCM. If the PCM was updated, substitute a known-good PCM (see page 11-8), then go to step 27. If the PCM was substituted, go to step 1.

    **NO**—Go to step 29.

29. Monitor the OBD STATUS for DTC P0498 in the DTCs MENU with the HDS.

    *Does the screen indicate PASSED?*

    **YES**—If the PCM was updated, troubleshooting is complete. If the PCM was substituted, replace the original PCM (see page 11-252). If any other Temporary DTCs or DTCs were indicated in step 28, go to the indicated DTC's troubleshooting.■

    **NO**—If the screen indicates FAILED, check for poor connections or loose terminals at the EVAP canister vent shut valve and the PCM. If the PCM was updated, substitute a known-good PCM (see page 11-8), then go to step 27. If the PCM was substituted, go to step 1. If the screen indicates NOT COMPLETED, go to step 27.

Protected by AR



## DTC Troubleshooting (cont'd)

### **DTC P0499:** EVAP Canister Vent Shut Valve Circuit High Voltage

NOTE: Before you troubleshoot, record all freeze data and any on-board snapshot, and review the general troubleshooting information (see page 11-3).

1. Turn the ignition switch ON (II).

2. Clear the DTC with the HDS.

3. Select EVAP CVS ON in the INSPECTION MENU with the HDS.

4. Check for Temporary DTCs or DTCs with the HDS.

   *Is DTC P0499 indicated?*

   **YES**—Go to step 5.

   **NO**—Intermittent failure, the system is OK at this time. Check for poor connections or loose terminals at the EVAP canister vent shut valve and the PCM. ■

5. Update the PCM if it does not have the latest software (see page 11-7), or substitute a known-good PCM (see page 11-8).

6. Select EVAP CVS ON in the INSPECTION MENU with the HDS.

7. Check for Temporary DTCs or DTCs with the HDS.

   *Is DTC P0499 indicated?*

   **YES**—Check for poor connections or loose terminals at the EVAP canister vent shut valve and the PCM. If the PCM was updated, substitute a known-good PCM (see page 11-7), then go to step 6. If the PCM was substituted, go to step 1.

   **NO**—Go to step 8.

8. Monitor the OBD STATUS for DTC P0499 in the DTCs MENU with the HDS.

   *Does the screen indicate PASSED?*

   **YES**—If the PCM was updated, troubleshooting is complete. If the PCM was substituted, replace the original PCM (see page 11-252). If any other Temporary DTCs or DTCs were indicated in step 7, go to the indicated DTC's troubleshooting. ■

   **NO**—If the screen indicates FAILED, check for poor connections or loose terminals at the EVAP canister vent shut valve and the PCM. If the PCM was updated, substitute a known-good PCM (see page 11-8), then go to step 6. If the PCM was substituted, go to step 1. If the screen indicates NOT COMPLETED, go to step 6.



BACK

Protected by AR

## **DTC P1454:** FTP Sensor Range/Performance Problem

## **DTC P2422:** EVAP Canister Vent Shut Valve Stuck Closed Malfunction

NOTE: Before you troubleshoot, record all freeze data and any on-board snapshot, and review the general troubleshooting information (see page 11-3).

1. Turn the ignition switch ON (II).
2. Clear the DTC with the HDS.
3. Turn the ignition switch OFF.
4. Remove the fuel fill cap, and wait 1 minute.
5. Check the FTP SENSOR in the DATA LIST with the HDS.

   *Is it between −0.67 and 0.67 kPa (−0.2 and 0.2 in.Hg, −5 and 5 mmHg), or 2.4 and 2.6 V?*

   **YES**—Go to step 6.

   **NO**—Go to step 17.
6. Install the fuel fill cap.
7. Clear the DTC with the HDS.
8. Start the engine, and let it idle without load (in Park or neutral) until the radiator fan comes on.
9. Monitor the OBD STATUS for DTC P1454 in the DTCs MENU with the HDS.

   *Does the screen indicate FAILED?*

   **YES**—Go to step 10.

   **NO**—If the screen indicates PASSED, intermittent failure, the system is OK at this time. Check for poor connections or loose terminals at the FTP sensor, the EVAP canister vent shut valve, and the PCM. Also check for a blockage in the vent hoses and the drain joint. If the screen indicates NOT COMPLETED, go to step 8 and recheck.
10. Clear the DTC with the HDS.
11. Turn the ignition switch OFF.
12. Remove the EVAP canister vent shut valve from the EVAP canister (see page 11-487).
13. Connect the 2P connector to the EVAP canister vent shut valve.
14. Turn the ignition switch ON (II).
15. Select EVAP CVS ON in the INSPECTION MENU with the HDS.
16. Check the EVAP canister vent shut valve (A) operation.

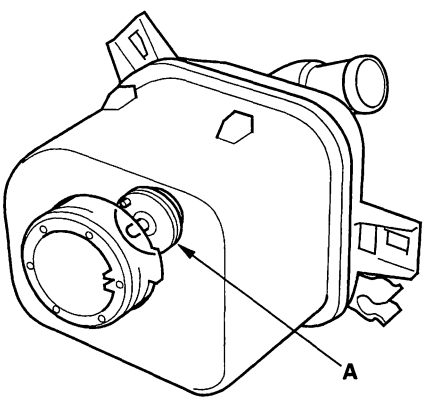


   *Does the valve operate?*

   **YES**—Check for a blockage in the EVAP canister, vent hoses, and drain joint, then install the EVAP canister vent shut valve, and go to step 23.

   **NO**—Replace the EVAP canister vent shut valve (see page 11-487), then go to step 23.

(cont'd)

Protected by AR



## DTC Troubleshooting (cont'd)

17. Disconnect the air tube (A) from the FTP sensor (B).

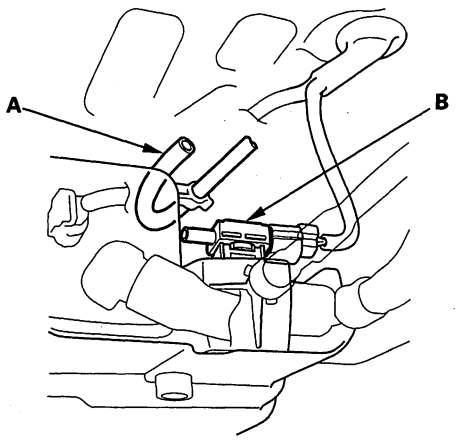


18. Check the FTP SENSOR in the DATA LIST with the HDS.

    *Is it between −0.67 and 0.67 kPa (−0.2 and 0.2 in.Hg, −5 and 5 mmHg), or 2.4 and 2.6 V?*

    **YES**—Check for a blockage in the FTP sensor air tube or vent, then go to step 23.

    **NO**—Go to step 19.

19. Turn the ignition switch OFF.

20. Remove the FTP sensor (A) from the EVAP canister with its connector connected (see page 11-485).

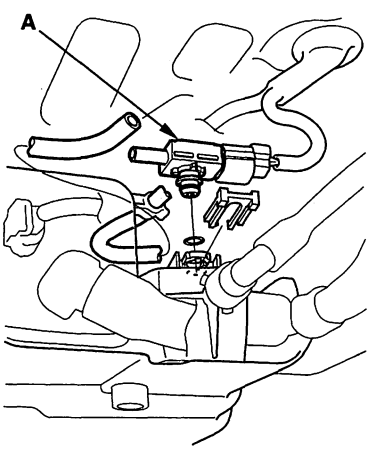


21. Turn the ignition switch ON (II).

22. Check the FTP SENSOR in the DATA LIST with the HDS.

    *Is it between −0.67 kPa and 0.67 kPa (−0.2 and 0.2 in.Hg, −5 and 5 mmHg), or 2.4 and 2.6 V?*

    **YES**—Check for debris or clogging at the EVAP canister and the FTP sensor port, then go to step 23.

    **NO**—Replace the FTP sensor (see page 11-485), then go to step 23.

23. Turn the ignition switch ON (II).

24. Reset the PCM with the HDS.

25. Do the PCM idle learn procedure (see page 11-339).

26. Start the engine, and let it idle without load (in Park or neutral) until the radiator fan comes on.

27. Check for Temporary DTCs or DTCs with the HDS.

    *Is DTC P1454 and/or P2422 indicated.?*

    **YES**—Check for poor connections or loose terminals at the FTP sensor, the EVAP canister vent shut valve, and the PCM, then go to step 1.

    **NO**—Go to step 28.



BACK

Protected by AR

28. Monitor the OBD STATUS for DTC P1454 in the DTCs MENU with the HDS.

    *Does the screen indicate PASSED?*

    **YES**—Troubleshooting is complete. If any other Temporary DTCs or DTCs were indicated in step 27, go to the indicated DTC's troubleshooting. ■

    **NO**—If the screen indicates FAILED, check for poor connections or loose terminals at the FTP sensor, the EVAP canister vent shut valve, and the PCM, then go to step 1. If the screen indicates NOT COMPLETED, go to step 26.

Protected by AR



## DTC Troubleshooting (cont'd)

### DTC P145A: EVAP System Incorrect Purge Flow Detected

**Special Tools Required**
- Vacuum/pressure gauge, 0—4 in.Hg 07JAZ-001000B
- Vacuum pump/gauge, 0—30 in.Hg, Snap-on YA4000A or equivalent, commercially available

NOTE: Before you troubleshoot, record all freeze data and any on-board snapshot, and review the general troubleshooting information (see page 11-3).

1. Turn the ignition switch ON (II).

2. Clear the DTC with the HDS.

3. Select the EVAP FUNCTION TEST in the INSPECTION MENU with the HDS.

   *Is the result OK?*

   **YES**—Intermittent failure, the system is OK at this time. Check for poor connections or loose terminals at the FTP sensor and the PCM. ■

   **NO**—Go to step 4.

4. Check for poor connection, blockage, or damage at the EVAP canister purge line between the EVAP canister purge nozzle and EVAP canister purge valve.

   *Is the hose OK?*

   **YES**—Go to step 5.

   **NO**—Reconnect or repair the EVAP canister purge line, then go to step 21.

5. Check for poor connection, blockage, or damage at the hose between EVAP canister purge nozzle and turbocharger bypass valve base.

   *Is the hose OK?*

   **YES**—Go to step 6.

   **NO**—Reconnect or repair the hose, then go to step 21.

6. Remove the intake air duct (air flow tube) (see step 19 on page 9-16).

7. Disconnect the vacuum hose (A) from the EVAP canister purge valve (B).

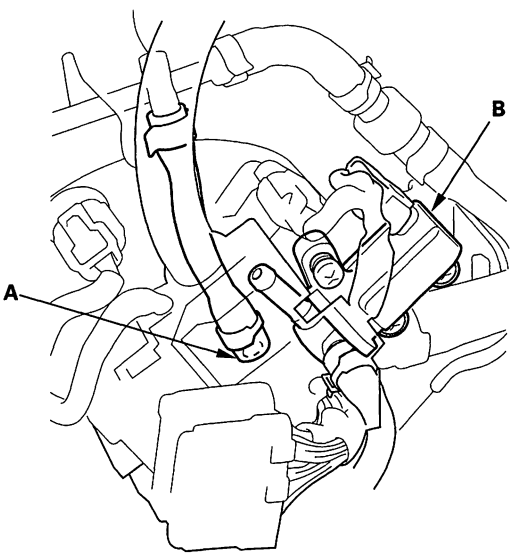




BACK

Protected by AR

8. Disconnect the vacuum hose from the purge line (at the EVAP canister side), and connect a T-fitting (A) from the vacuum gauge and the vacuum pump/gauge, 0—30 in.Hg, to the hose as shown.

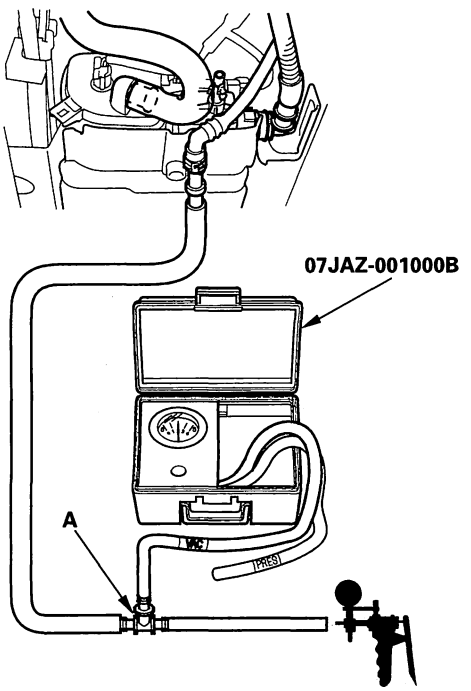


9. Apply about 2 kPa (0.6 in.Hg, 15 mmHg) of vacuum to the hose.

10. Select EVAP PCS ON in the INSPECTION MENU with the HDS.

    *Does the vacuum release immediately?*

    **YES**—Go to step 15.

    **NO**—Go to step 11.

11. Select EVAP PCS OFF in the INSPECTION MENU with the HDS.

12. Disconnect the vacuum hose (A) from the EVAP canister purge valve (B). Connect a T-fitting (C) from the vacuum gauge the vacuum pump/gauge, 0—30 in.Hg, to the EVAP canister purge valve as shown.

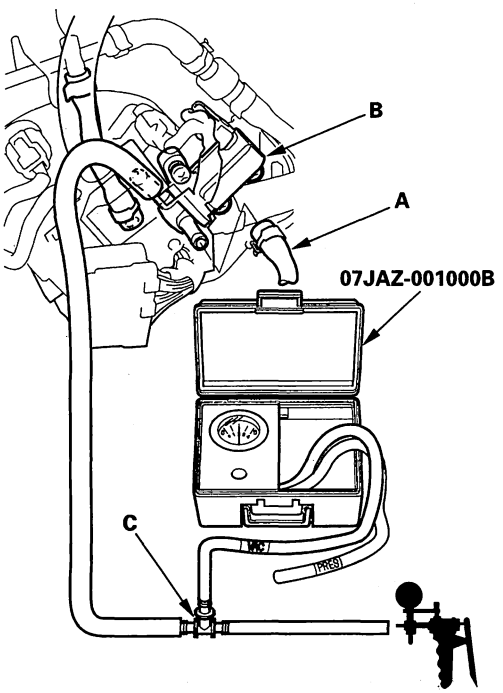


13. Apply about 2 kPa (0.6 in.Hg, 15 mmHg) of vacuum to the hose.

14. Select EVAP PCS ON in the INSPECTION MENU with the HDS.

    *Does the vacuum release immediately?*

    **YES**—Check for blockage in the vacuum hose between the EVAP canister purge valve and the EVAP canister, then go to step 21.

    **NO**—Replace the EVAP canister purge valve (see page 11-486), then go to step 21.

(cont'd)

Protected by AR



## DTC Troubleshooting (cont'd)

15. Turn the ignition switch OFF.

16. Disconnect the hose (A) from the turbocharger bypass control valve base (B), and connect the vacuum pump/gauge, 0—30 in.Hg, to the pressure hose as shown.

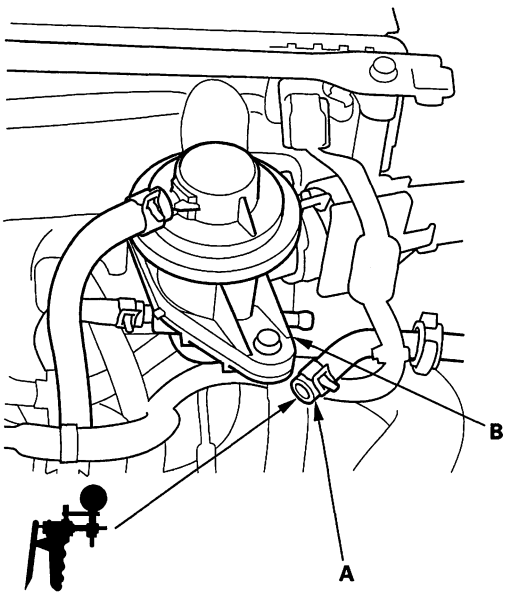


17. Apply vacuum to the hose.

    *Does it hold vacuum?*

    **YES**—Repair the hose between the turbocharger bypass control valve base and the EVAP canister purge nozzle, then go to step 21.

    **NO**—Go to step 18.

18. Disconnect the vacuum hose (A) from the EVAP canister purge nozzle (B), and connect the vacuum pump/gauge, 0—30 in.Hg, to the vacuum hose as shown.

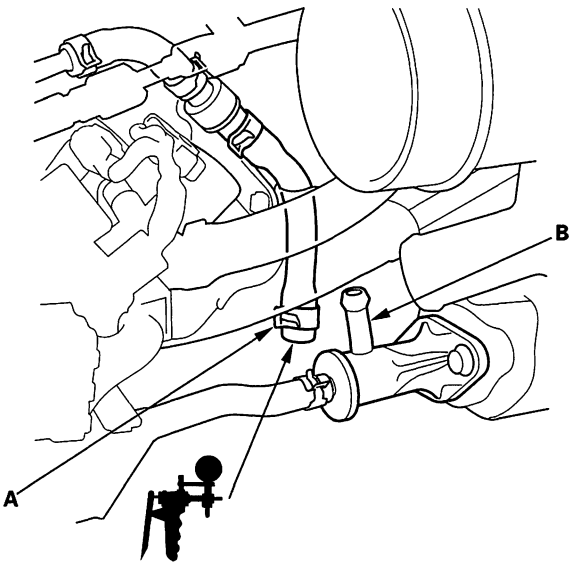


19. Apply vacuum to the hose.

    *Dose it hold vacuum?*

    **YES**—Go to step 20.

    **NO**—Check for debris or clogging at the EVAP canister purge nozzle port and the turbocharger bypass control valve base port , then go to step 21.



BACK

Protected by AR

20. Inspect non-return valve B (see page 11-488).

    *Is the valve OK?*

    **YES**—Repair the EVAP canister purge line between the EVAP canister purge nozzle and EVAP canister purge valve, then go to step 21.

    **NO**—Replace non-return valve B, then go to step 21.

21. Reconnect all hoses, and reinstall all parts.

22. Turn the ignition switch ON (II).

23. Reset the PCM with the HDS.

24. Do the PCM idle learn procedure (see page 11-339).

25. Select the EVAP FUNCTION TEST in the INSPECTION MENU with the HDS.

    *Is the result OK?*

    **YES**—Troubleshooting is complete.■

    **NO**—Check the EVAP purge control solenoid valve, the EVAP canister purge nozzle and its hose, and the EVAP canister purge line (jet purge line), then go to step 1.

Protected by AR



## DTC Troubleshooting (cont'd)

### **DTC P145B:** EVAP System Purge Line Non-return Valve A Stuck Open

NOTE: Before you troubleshoot, record all freeze data and any on-board snapshot, and review the general troubleshooting information (see page 11-3).

1. Turn the ignition switch ON (II).
2. Select the EVAP TEST in the INSPECTION MENU with the HDS.

   *Is the result OK?*

   **YES**—Intermittent failure, the system is OK at this time.■

   **NO**—Go to step 3.
3. Replace non-return valve A (see page 11-488).
4. Reset the PCM with the HDS.
5. Do the PCM idle learn procedure (see page 11-339).
6. Select the EVAP FUNCTION TEST in the INSPECTION MENU with the HDS.

   *Is the result OK?*

   **YES**—Troubleshooting is complete.■

   **NO**—Check the EVAP canister purge line, then go to step 1.

### **DTC P145C:** EVAP System Purge Flow Malfunction (Vacuum Purge)

### **DTC P145D:** EVAP System Purge Flow Malfunction (Jet Purge)

NOTE:
- Before you troubleshoot, record all freeze data and any on-board snapshot, and review the general troubleshooting information (see page 11-3).
- If DTC P145C is indicated alone, do the troubleshooting for DTC P0496 and P0497 using freeze data from P145C. If DTC P145D is indicated alone, do the troubleshooting for DTC P0496 and P145A using freeze data from P145D.
- If DTC P0497, P145A, P145C, and P145D stored at the same time, check for poor connection, blockage, or damage at the EVAP canister purge line between the EVAP canister purge valve and the EVAP canister. Also check for a stuck closed EVAP canister purge valve.
- If any of the DTCs listed below are indicated at the same time as DTC P145C and/or P145D, troubleshoot those DTCs first, then recheck for P145C and/or P145D.

P0496, P0497, P145A: EVAP system purge flow



BACK

Protected by AR

# Fuel Cap Warning Message System Troubleshooting

**Special Tools Required**
- Vacuum/pressure gauge, 0—4 in.Hg 07JAZ-001000B
- Vacuum pump/gauge, 0—30 in.Hg, Snap-on YA4000A or equivalent, commercially available

When the fuel cap warning message does not go off after fuel cap tightened, or the message turned on frequently, do this troubleshooting procedure.

1. Check the fuel fill cap (the cap must say "Tighten to click"). It should turn 1/4 after it's tight, then it clicks.

   *Is the correct fuel fill cap installed and properly tightened?*

   **YES**—Go to step 2.

   **NO**—Replace or tighten the cap, then go to step 13.

2. Check the fuel fill cap seal (A) and the fuel fill pipe mating surface (B). Verify that the fuel fill cap tether cord (C) is not caught under the cap.

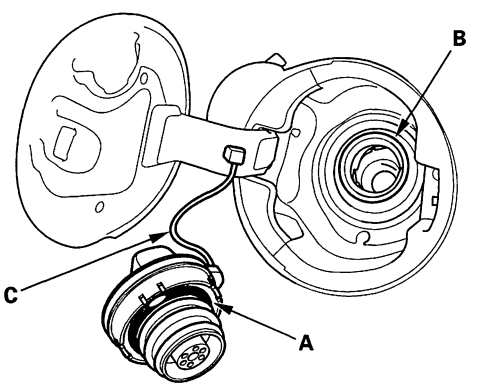


   *Is the fuel fill cap seal missing or damaged, is the fuel fill pipe damaged, or is the tether cord caught under the cap?*

   **YES**—Replace the fuel fill cap or the fuel fill pipe, then go to step 13.

   **NO**—Go to step 3.

3. Reinstall and tighten the fuel fill cap.

4. Clear the DTC with the HDS.

5. Start the engine. Hold the engine speed at 3,000 rpm without load (in Park or neutral) until the radiator fan comes on, then let it idle for 1 minute.

6. Test drive at 45 mph (72 km/h) for 1 minute or more.

   *Does the fuel cap warning message comes on?*

   **YES**—Go to step 7.

   **NO**—Intermittent failure, the system is OK at this time. ■

7. Turn the ignition switch OFF.

8. Remove the intake air duct (air flow tube) (see step 19 on page 9-16).

9. Disconnect the vacuum hose (A) from the EVAP canister purge valve (B) in the engine compartment, and connect a T-fitting (C) from the vacuum gauge and the vacuum pump/gauge 0—30 in.Hg, to the EVAP canister purge valve as shown.

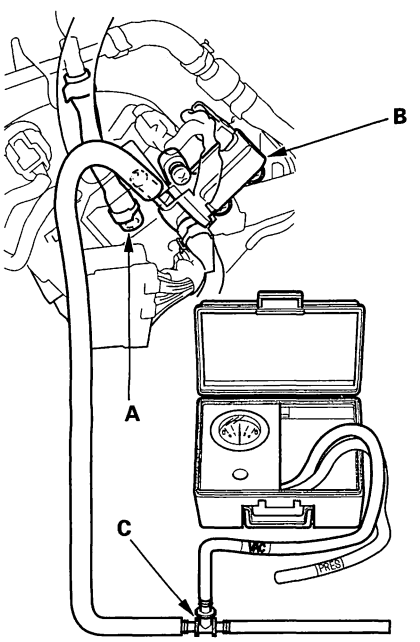


(cont'd)

Protected by AR



## Fuel Cap Warning Message System Troubleshooting (cont'd)

10. Turn the ignition switch ON(II).

11. Apply vacuum to the hose about 2 kPa (0.6 in.Hg, 15 mmHg).

12. Select EVAP PCS ON in the INSPECTION MENU with the HDS.

    *Does the vacuum release immediately?*

    **YES**—Check for blockage the vacuum hose between EVAP canister purge valve and the EVAP canister, then go to step 13.

    **NO**—Replace the EVAP canister purge valve (see page 11-486), then go to step 13.

13. Install the parts in the reverse order of removal.

14. Turn the ignition switch ON (II).

15. Reset the PCM with the HDS.

16. Do the PCM idle learn procedure (see page 11-339).

17. Start the engine. Hold the engine speed 3,000 rpm without load (in Park or neutral) until a radiator fan comes on, then let it idle for 1 minute.

18. Test drive at 45 mph (72 km/h) for 1 minute or more.

    *Does the fuel cap warning message comes on?*

    **YES**—Go to step 1 and recheck.

    **NO**—Troubleshooting is complete.■



BACK

Protected by AR

## EVAP Canister Replacement

1. Disconnect the hoses (A), the FTP sensor 3P connector (B), and the EVAP canister vent shut valve 2P connector (C).

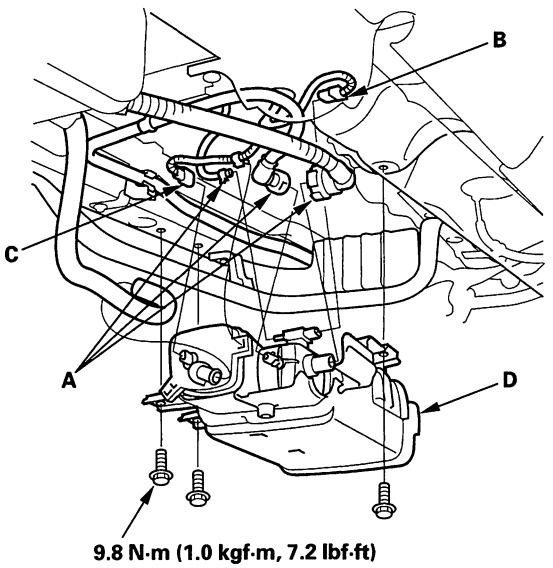


2. Remove the EVAP canister assembly D).

3. Remove the EVAP canister bracket (A) and the EVAP canister cover (B) from the EVAP canister (C).

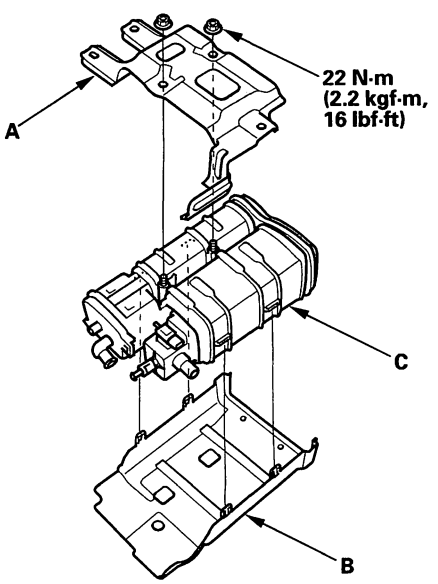


4. Install the parts in the reverse order of removal.

## FTP Sensor Replacement

1. Disconnect the FTP sensor connector (A).

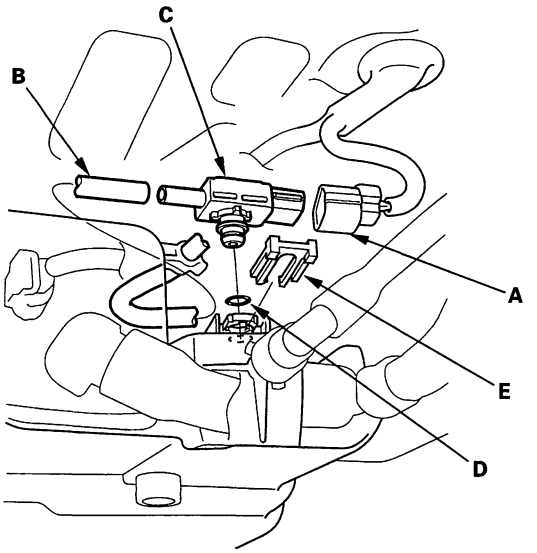


2. Disconnect the hose (B), then remove the FTP sensor (C).

3. Reinstall the parts in the reverse order of removal with a new O-ring (D) and a new retainer (E).

Protected by AR



## EVAP Canister Purge Valve Replacement

NOTE: DTC P0443 may be stored if the EVAP canister purge valve connector is removed within 15 seconds after ignition switch is turned OFF.

1. Remove the air cleaner (see page 11-394).
2. Remove the air bypass outlet pipe (see page 9-7).
3. Disconnect the CMP sensor B 3P connector (A).

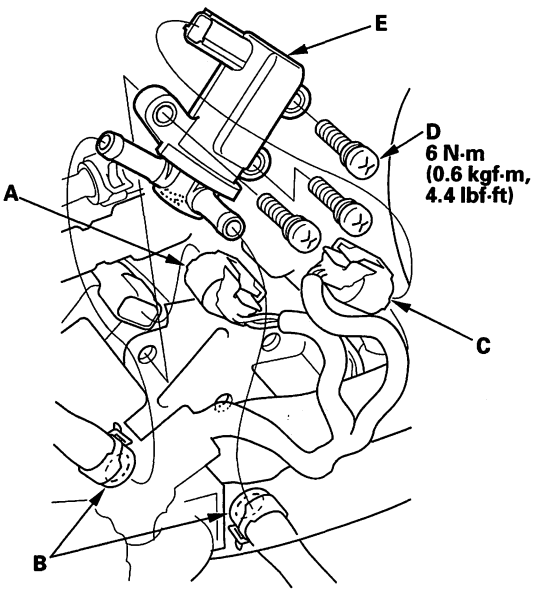


4. Disconnect the hoses (B), and EVAP canister purge valve 2P connector (C).
5. Remove the screws (D), then remove the EVAP canister purge valve (E).
6. Install the parts in the reverse order of removal.

## EVAP Canister Purge Nozzle Replacement

1. Remove the air cleaner (see page 11-394).
2. Remove the air bypass outlet pipe (see page 9-7).
3. Disconnect the hoses (A).

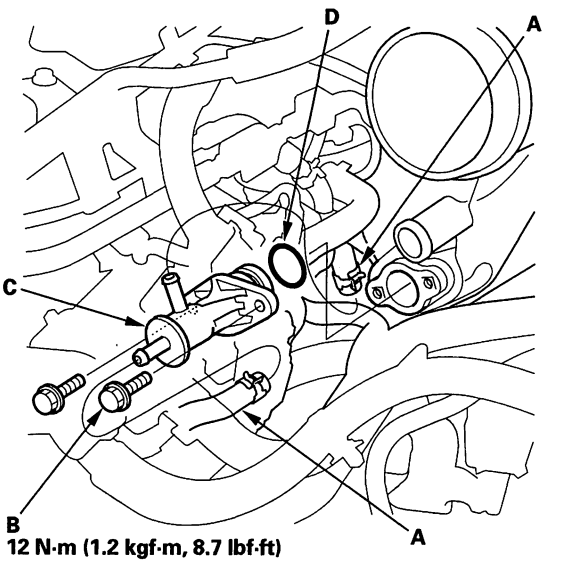


4. Remove the bolts (B), then remove the EVAP canister purge nozzle (C).
5. Install the parts in the reverse order of removal with a new O-ring (D).



BACK

Protected by AR

## EVAP Canister Vent Shut Valve Replacement

1. Remove the EVAP canister (see page 11-485).
2. Pry the lock tabs outward (A), then remove the EVAP canister vent shut valve (B).

   NOTE: Be careful not to damage the lock tabs.

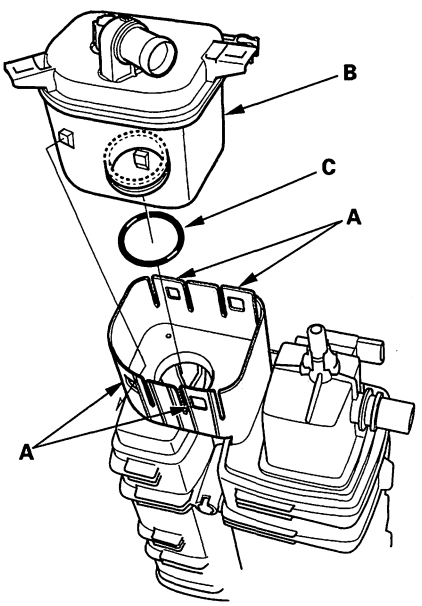


3. Install the parts in the reverse order of removal with a new O-ring (C).

   NOTE: Do not coat the O-ring with oil.

## EVAP Canister Filter Replacement

1. Disconnect the hoses (A).

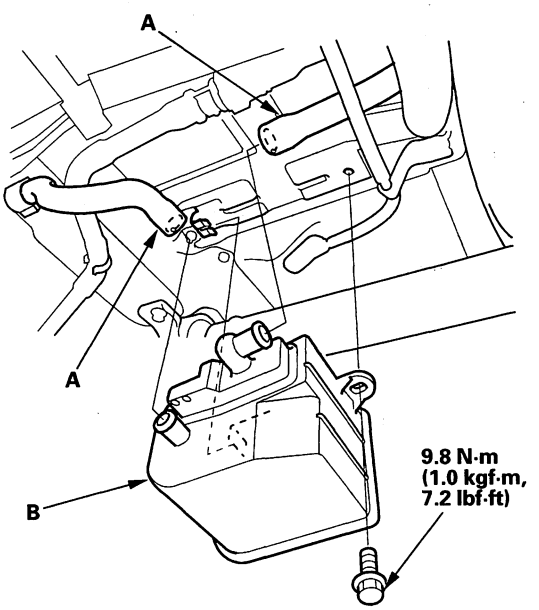


2. Remove the EVAP canister filter (B).
3. Install the parts in the reverse order of removal.

Protected by AR



## Non-return Valve A/B Inspection/Replacement

**Special Tools Required**
Vacuum pump/gauge, 0—30 in.Hg, Snap-on YA4000A or equivalent, commercially available

### Inspection

1. Remove the non-return valve.

2. Connect the vacuum pump/gauge, 0—30 in.Hg, to the non-return valve as shown. Note the direction of the arrow on the valve.

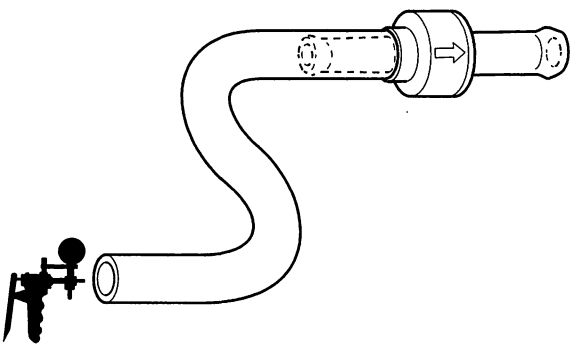

3. Apply vacuum to the valve.

   - If it holds vacuum, go to step 4.
   - If it doesn't hold the vacuum, replace the non-return valve.

4. Connect the vacuum pump/gauge, 0—30 in.Hg, to the non-return valve as shown. Note the direction of the arrow on the valve.

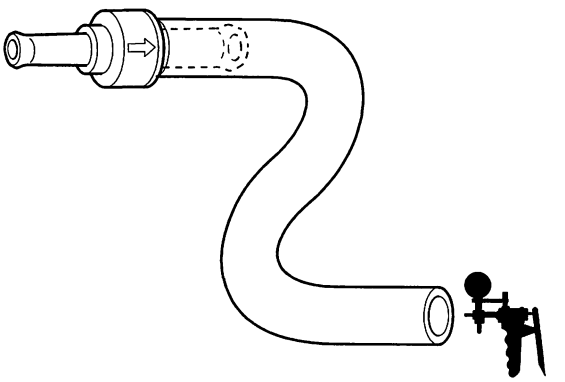

5. Apply vacuum to the valve.

   - If it holds vacuum, replace the non-return valve.
   - If it doesn't hold the vacuum, the non-return valve is OK.



BACK

Protected by AR

## Non-Return Valve A Replacement

1. Remove the charge air cooler cover (see step 1 on page 9-8).
2. Disconnect the hoses, then remove the non-return valve A.

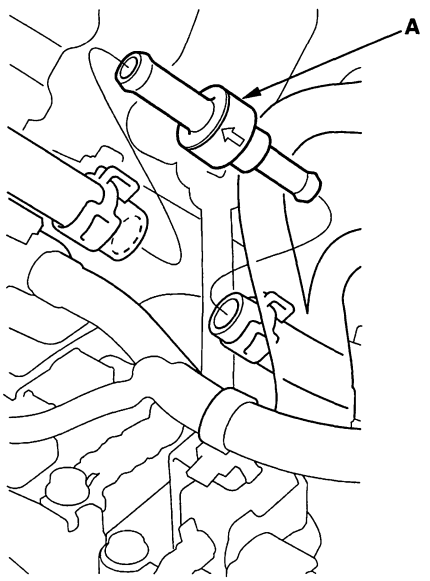


3. Install the parts in the reverse order of removal.

   NOTE: Make sure the arrow on the valve points in the correct direction.

## Non-Return Valve B Replacement

1. Remove the air cleaner (see page 11-394).
2. Remove the air bypass outlet pipe (see page 9-7).
3. Disconnect the hoses, then remove the non-return valve B.

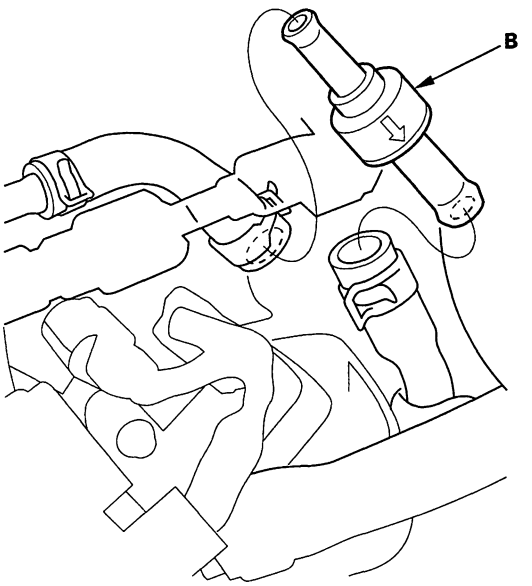


4. Install the parts in the reverse order of the removal.

   NOTE: Make sure the arrow on the valve points in the correct direction.

Protected by AR

# Transaxle

Automatic Transmission ..... 14-1

Rear Differential ..... 15-1

Driveline/Axle ..... 16-1

Protected by AR

## SUPPLEMENTAL RESTRAINT SYSTEM (SRS) (If automatic transmission maintenance is required)

The RDX SRS includes a driver's airbag in the steering wheel hub, a passenger's airbag in the dashboard above the glove box, seat belt tensioners in the front seat belt retractors, driver's seat belt buckle tensioner in the driver's seat belt lower anchor, front passenger's seat belt buckle tensioners in the front passenger's seat belt lower anchor, side curtain airbags in the sides of the roof, and side airbags in the front seat-backs. Information necessary to safely service the SRS is included in this Service Manual. Items marked with an asterisk ( * ) on the contents page include or are located near SRS components. Servicing, disassembling, or replacing these items require special precautions and tools, and should be done only by an authorized Acura dealer.

- To avoid rendering the SRS inoperative, which could lead to personal injury or death in the event of a severe frontal or side collision, all SRS service work must be performed by an authorized Acura dealer.
- Improper service procedures, including incorrect removal and installation of the SRS, could lead to personal injury caused by unintentional deployment of the airbags and/or side airbags.
- Do not bump or impact the SRS unit, front impact sensors, or side impact sensors when the ignition switch is ON (II), or for at least 3 minutes after the ignition switch is turned OFF; otherwise, the system may fail in a collision, or the airbags may deploy.
- SRS electrical connectors are identified by yellow color coding. Related components are located in the steering column, front console, dashboard, dashboard lower panel, in the dashboard above the glove box, in the front seats, in the roof side, and around the floor. Do not use electrical test equipment on these circuits.

Protected by AR

# Automatic Transmission

## Automatic Transmission


Special Tools ..... 14-2
General Troubleshooting Information ..... 14-4
DTC Troubleshooting Index ..... 14-11
Symptom Troubleshooting Index ..... 14-14
System Description ..... 14-26
DTC Troubleshooting ..... 14-80
Road Test ..... 14-209
Stall Speed Test ..... 14-211
Pressure Test ..... 14-212
Shift Solenoid Valve
Test and Replacement ..... 14-216
Shift Solenoid Wire Harness
Replacement ..... 14-216
A/T Clutch Pressure Control
Solenoid Valve A
Test ..... 14-220
Replacement ..... 14-226
A/T Clutch Pressure Control
Solenoid Valve B
Test ..... 14-223
Replacement ..... 14-226
A/T Clutch Pressure Control
Solenoid Valve C
Test ..... 14-228
Replacement ..... 14-231
Input Shaft (Mainshaft) Speed Sensor
Replacement ..... 14-233
Output Shaft (Countershaft) Speed Sensor
Replacement ..... 14-233
2nd Clutch Transmission Fluid Pressure
Switch Replacement ..... 14-234
3rd Clutch Transmission Fluid Pressure
Switch Replacement ..... 14-235
4th Clutch Transmission Fluid Pressure
Switch Replacement ..... 14-236
ATF Temperature Sensor Replacement ..... 14-237
ATF Level Check ..... 14-238
ATF Replacement ..... 14-239
Transfer Assembly Fluid Replacement ..... 14-241
Transfer Assembly Inspection ..... 14-242
Transfer Assembly Removal ..... 14-243
Transfer Assembly Installation ..... 14-245
Transfer Breather Hose Replacement ..... 14-246
Transmission Removal ..... 14-247
Transmission Installation ..... 14-258
Drive Plate Removal and Installation ..... 14-270
ATF Cooler Cleaning ..... 14-271
ATF Cooler Hose Replacement ..... 14-273
ATF Cooler Replacement ..... 14-274
Shift Lever Removal ..... 14-275
Shift Lever Installation ..... 14-276
Shift Lever Disassembly/Reassembly ..... 14-277
Shift Lever/Shift Cable Bracket Assembly
Replacement ..... 14-278
Shift Lever Knob, Shift Lever Knob Cover,
and Shift Lever Button Ring
Replacement ..... 14-280
Shift Lever Boot Replacement ..... 14-281
Shift Cable Replacement ..... 14-282
Shift Cable Adjustment ..... 14-285
Transmission Disassembly ..... 14-316
Transmission Reassembly ..... 14-383


## A/T Gear Position Indicator


Component Location Index ..... 14-288
Circuit Diagram ..... 14-289
Transmission Range Switch Test ..... 14-290
Transmission Range Switch
Replacement ..... 14-292
Paddle Shifter + (Upshift Switch)
* Circuit Troubleshooting ..... 14-295
* Test ..... 14-299
* Replacement ..... 14-300
Paddle Shifter − (Downshift Switch)
* Circuit Troubleshooting ..... 14-297
* Test ..... 14-301
* Replacement ..... 14-302
A/T Gear Position Indicator Panel
Replacement ..... 14-281


## A/T Interlock System


Component Location Index ..... 14-303
Circuit Diagram ..... 14-304
Shift Lock System Circuit
Troubleshooting ..... 14-305
* Key Interlock System Circuit
Troubleshooting ..... 14-310
Shift Lock Solenoid Test ..... 14-311
Shift Lock Solenoid Replacement ..... 14-312
Shift Lock Stop, Shift Lock Stop Cushion
Replacement ..... 14-313
Shift Lock Release and Release Spring
Replacement ..... 14-313
Park Pin Switch Test ..... 14-314
Park Pin Switch Replacement ..... 14-315


## Transmission Housing


Reverse Idler Gear Removal/Installation ..... 14-322
Reverse Idler Gear
Disassembly/Inspection/Reassembly ..... 14-322
Secondary Shaft ATF Feed Pipe Cap
Removal ..... 14-323
Installation ..... 14-323
Secondary Shaft ATF Feed Pipe Cap,
Feed Pipe Replacement ..... 14-324
ATF Filter
Removal/Inspection/Installation ..... 14-324
Mainshaft Bearing
Removal ..... 14-325
Installation ..... 14-325
Intermediary Shaft Bearing Replacement ... 14-326
Park Lever Shaft Bearing Replacement ..... 14-326
Selector Control Shaft Bearing
Replacement ..... 14-327
Selector Control Shaft Oil Seal
Replacement ..... 14-327


BACK

Protected by AR

## Valve Body


Valve Body Repair ..... 14-328
Valve Body Valve Installation ..... 14-329
Main Valve Body Disassembly, Inspection, and Reassembly ..... 14-330
ATF Pump Inspection ..... 14-331
Secondary Valve Body Disassembly, Inspection, and Reassembly ..... 14-332
Regulator Valve Body Disassembly, Inspection, and Reassembly ..... 14-333
Accumulator Body Disassembly, Inspection, and Reassembly ..... 14-334
Shift Solenoid Valve Removal and Installation ..... 14-335


## Torque Converter Housing


Mainshaft Bearing and Oil Seal Replacement ..... 14-336
Countershaft Bearing Replacement ..... 14-337
Secondary Shaft Bearing Replacement ..... 14-338
Intermediary Shaft Bearing Replacement ..... 14-340
Park Lever Shaft Bearing Replacement ..... 14-341


## Shafts and Clutches


Mainshaft Disassembly, Inspection, and Reassembly ..... 14-342
Mainshaft 4th Gear Replacement ..... 14-343
Countershaft Disassembly ..... 14-344
Countershaft Idler Gear and 4th Gear Axial Clearance Inspection ..... 14-346
Countershaft Reassembly ..... 14-348
Secondary Shaft Disassembly ..... 14-350
Secondary Shaft 1st Gear Axial Clearance Inspection ..... 14-352
1st Gear One-way Clutch Inspection ..... 14-354
1st Clutch Hub Replacement ..... 14-355
Secondary Shaft Reassembly ..... 14-356
Secondary Shaft Installation Height Inspection/Adjustment ..... 14-359
Intermediary Shaft Disassembly, Inspection, and Reassembly ..... 14-361
Intermediary Shaft 4th Gear
Removal ..... 14-362
Installation ..... 14-362
Intermediary Shaft 3rd Gear Axial Clearance Inspection ..... 14-363
Intermediary Shaft Installation Height Inspection/Adjustment ..... 14-365
Clutch Disassembly ..... 14-366
Clutch Inspection ..... 14-371
Clutch Waved-plate Phase Difference Inspection ..... 14-372
Clutch Clearance Inspection ..... 14-373
Clutch Reassembly ..... 14-378


## A/T Differential


Component location Index ..... 14-395
Backlash Inspection ..... 14-395
Differential Carrier, Final Driven Gear, and Transfer Drive Gear Replacement ..... 14-396
Carrier Bearing Replacement ..... 14-397
Oil Seal Replacement ..... 14-398
Carrier Bearing Outer Race Replacement ..... 14-399
Carrier Bearing Preload Inspection ..... 14-401


## Transfer Output Shaft


Component Location Index ..... 14-404
Transfer Output Shaft Bearing Replacement ..... 14-404
Oil Seal Replacement ..... 14-405
Transmission Housing Bearing Replacement ..... 14-406
Transfer Output Shaft Installation Height Inspection/Adjustment ..... 14-407


## Transfer Assembly


Inspection ..... 14-408
Disassembly ..... 14-409
Transfer Hypoid Drive Gear Bearing Replacement ..... 14-412
Transfer Output Shaft (Hypoid Gear) Bearing Removal/Installation ..... 14-413
Transfer Housing Tapered Roller Bearing Outer Race Replacement ..... 14-414
Transfer Cover Tapered Roller Bearing Outer Race Removal/Installation ..... 14-416
Transfer Cover Oil Seal Replacement ..... 14-417
Reassembly ..... 14-418


BACK

Protected by AR



## Special Tools

| Ref. No. | Tool Number | Description | Qty |
|---|---|---|---|
| ① | 07AAK-SNAA500 | Support Bolt | 1 |
| ② | 07AAK-SNAA600 | RDX Engine Support Eyelet | 1 |
| ③ | 07AAK-STKA120 | RDX Engine Support Mount Pads | 2 |
| ④ | 07GAB-PF50101 | Mainshaft Holder | 1 |
| ⑤ | 07GAD-PG40100 | Oil Seal Driver Attachment | 1 |
| ⑥ | 07GAD-SD40101 | Attachment, 78 x 90 mm | 1 |
| ⑦ | 07GAE-PG40200 or 07GAE-PG4020A | Clutch Spring Compressor Bolt Assembly | 1 |
| ⑧ | 07HAD-SG00100 | Attachment, 83 mm | 1 |
| ⑨ | 07JAD-PH80101 | Oil Seal Driver Attachment | 1 |
| ⑩ | 07JAD-SH30100 | Attachment, 65 mm | 1 |
| ⑪ | 07LAD-PW50601 | Attachment, 40 x 50 mm | 1 |
| ⑫ | 07LAE-PX40100 | Clutch Spring Compressor Attachment | 2 |
| ⑬ | 07MAD-PR90100 | Attachment, 45 x 55 mm | 1 |
| ⑭ | 07MAF-SP0011A | Tapered Bearing Race Installer | 1 |
| ⑮ | 07MAF-SP0013A | Installer Shaft | 1 |
| ⑯ | 07MAJ-PY4011A | A/T Pressure Hose, 2,210 mm | 3 |
| ⑰ | 07MAJ-PY40120 | A/T Pressure Hose Adapter | 3 |
| ⑱ | 07NAD-PX40100 | Attachment, 78 x 80 mm | 1 |
| ⑲ | 07XAA-002010A | Wrench, 40 x 42 mm | 1 |
| ⑳ | 07XAB-0010101 | Companion Flange Holder | 1 |

07HAE-PL50101 may also be used to substitute one of 07LAE-PX40100.

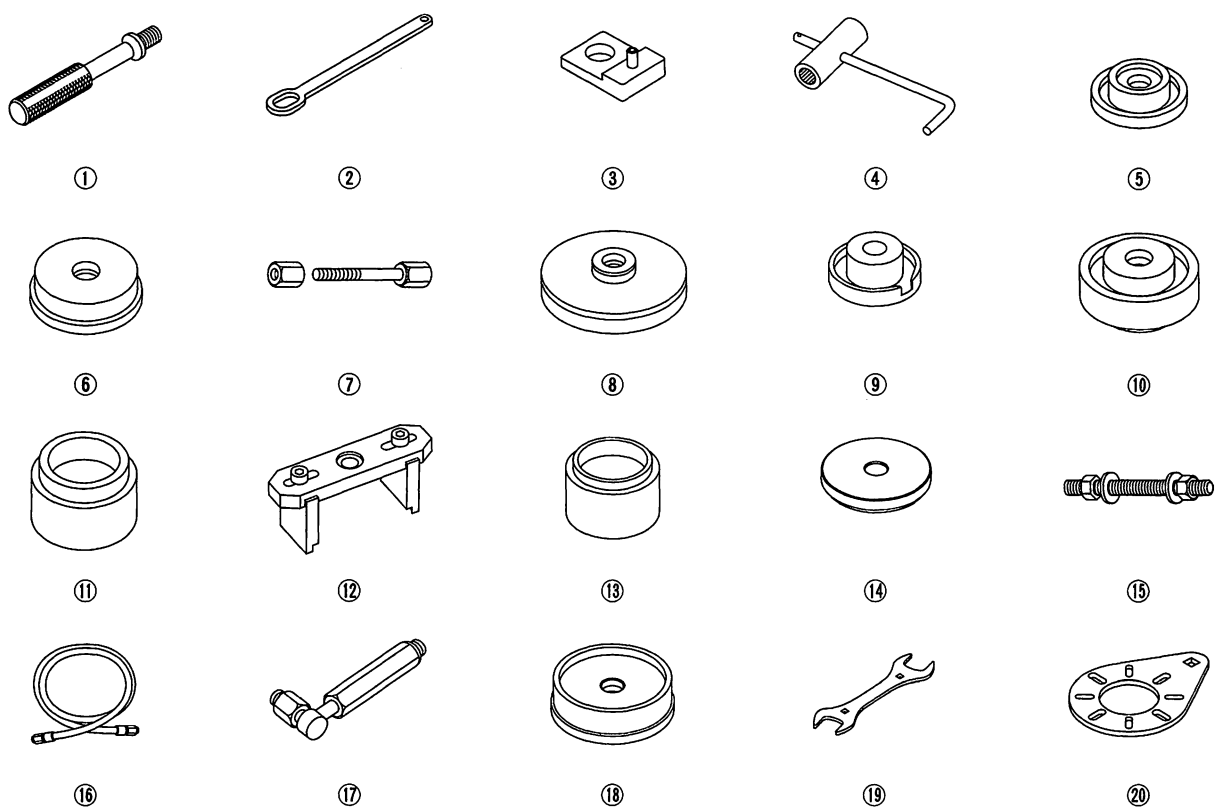




BACK

Protected by AR

| Ref. No. | Tool Number | Description | Qty |
|---|---|---|---|
| ㉑ | 07ZAE-PRP0100 | Clutch Compressor Attachment | 1 |
| ㉒ | 070AJ-0020101 | Preload Inspection Tool | 1 |
| ㉓ | 07406-0020400 or 07406-0020401 | A/T Clutch Pressure Gauge Set/Panel | 1 |
| ㉔ | 07736-A01000B or 07736-A01000A | Adjustable Bearing Puller, 25—40 mm | 1 |
| ㉕ | 07741-0010201 | Sliding Hammer Weight | 1 |
| ㉖ | 07746-0010200 | Attachment, 37 x 40 mm | 1 |
| ㉗ | 07746-0010300 | Attachment, 42 x 47 mm | 1 |
| ㉘ | 07746-0010400 | Attachment, 52 x 55 mm | 1 |
| ㉙ | 07746-0010500 | Attachment, 62 x 68 mm | 1 |
| ㉚ | 07746-0010600 | Attachment, 72 x 75 mm | 1 |
| ㉛ | 07746-0010800 | Attachment, 22 x 24 mm | 1 |
| ㉜ | 07746-0030100 | Driver, 40 mm I.D. | 1 |
| ㉝ | 07746-0030300 | Attachment, 30 mm I.D. | 1 |
| ㉞ | 07749-0010000 | Driver | 1 |
| ㉟ | 07936-1660101 | Bearing Remover Shaft Set, 12 mm | 1 |
| ㊱ | 07936-3710100 | Bearing Remover Shaft Handle | 1 |
| ㊲ | 07936-3710600 | Bearing Remover Shaft Set, 20 mm | 1 |
| ㊳ | 07936-8890300 | Bearing Remover Shaft Set, 30 mm | 1 |
| ㊴ | 07936-GE00100 | Bearing Remover Shaft, 10 mm | 1 |
| ㊵ | 07936-GE00200 | Bearing Remover Head, 10 mm | 1 |
| ㊶ | 07947-6340500 | Driver Attachment | 1 |

07736-A01000B or 07736-A01000A must be used with commercially available 3/8"-16 slide hammer.

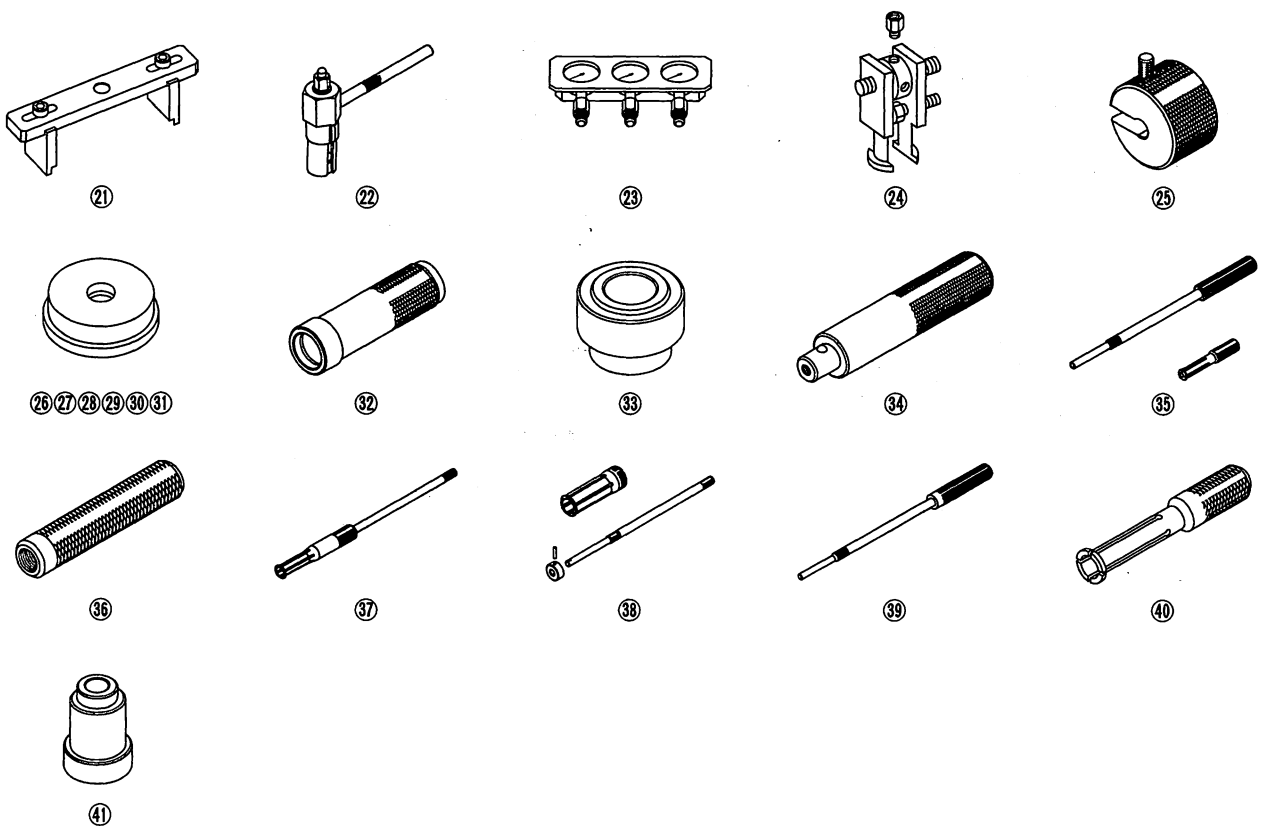

Protected by AR



## General Troubleshooting Information

### How to Check for DTCs with the Honda Diagnostic System (HDS)

When the powertrain control module (PCM) senses an abnormality in the input or output system, the D indicator (A) in the gauge assembly (B) will usually blink.

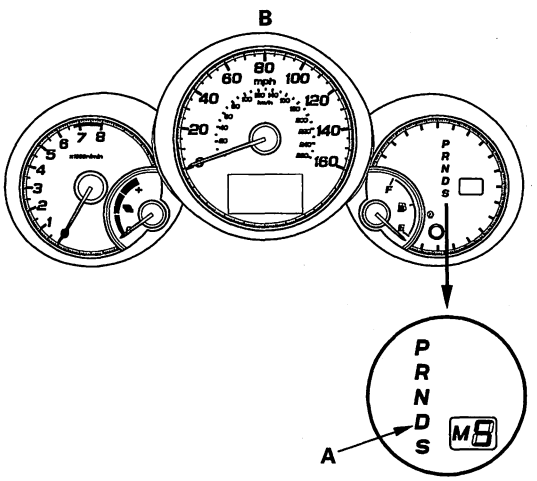


When the Honda Diagnostic System (HDS) is connected to the data link connector (DLC) (A) (located under the left end of the dash), it will indicate the diagnostic trouble code (DTC) when the ignition switch is turned ON (II) and the appropriate menu is selected.

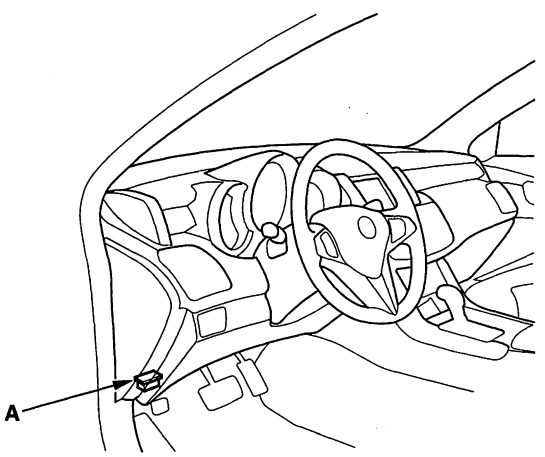


If the D indicator or malfunction indicator lamp (MIL) has been reported on, or if a driveability problem is suspected, follow this procedure:

1. Connect the HDS to the DLC. (See the HDS user's manual for specific instructions.)
2. Turn the ignition switch ON (II), select A/T system, and observe the DTC in the DTCs MENU on the HDS screen.
3. Record all fuel and emissions DTCs, and A/T DTCs, and freeze data.
4. If there is a fuel and emissions DTC, first check the fuel and emissions system as indicated by the DTC (except for DTC P0700, DTC P0700 means there is one or more A/T DTCs, and no problems were detected in the fuel and emissions circuit of the PCM).
5. Clear the DTC and data.
6. Drive the vehicle for several minutes under the same conditions as those indicated by the freeze data, and then recheck for a DTC. If the A/T DTC returns, go to the indicated DTC's troubleshooting. If the DTC does not return, there was an intermittent problem within the circuit. Make sure all pins and terminals in the circuit are tight.

### Symptom Troubleshooting Versus DTC Troubleshooting

Some symptoms will not trigger diagnostic trouble codes (DTCs) or cause the D indicator to blink. If the malfunction indicator lamp (MIL) was reported ON or the D indicator has been blinking, check for DTCs. If the vehicle has an abnormal symptom, and there are no DTCs stored, do the symptom troubleshooting. Check the list of probable cause(s) for the symptom, in the sequence listed, until you find the problem.



BACK

Protected by AR

## How to Check for DTCs with the SCS Mode (retrieving the flash codes)

NOTE: The preferred method is to use the HDS to retrieve the P-code.

When the PCM senses an abnormality in the input or output system, the D indicator (A) in the gauge assembly (B) will usually blink.

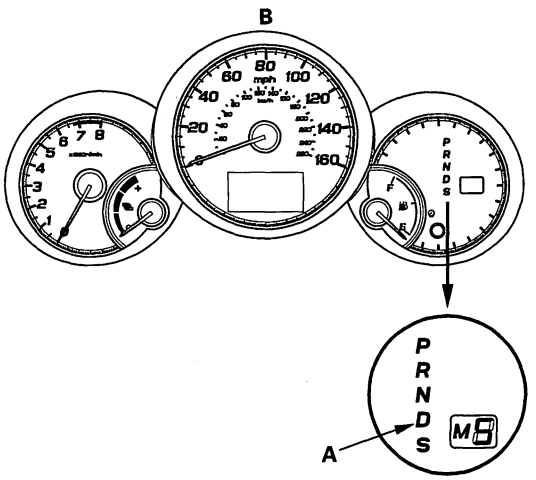


When the D indicator has been reported on, connect the HDS to the DLC (A) (located under the left end of the dash). Turn the ignition switch ON (II), select SCS mode, then the D indicator will indicate flash the DTC.

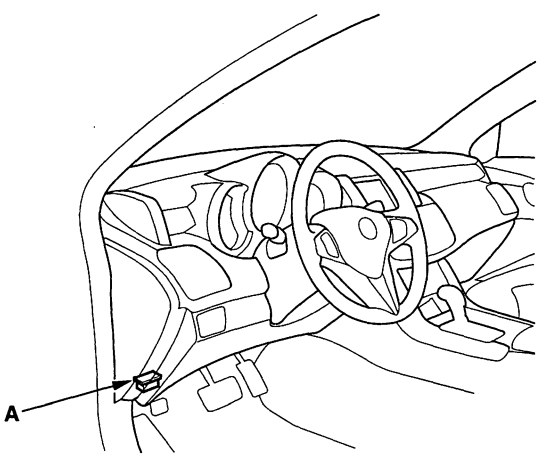


If the D indicator and the MIL come on at the same time, or if a driveability problem is suspected, follow this procedure:

1. Connect the HDS to the DLC. (See the HDS user's manual for specific instructions.)

2. Turn the ignition switch ON (II), select SCS mode, then observe the D indicator in the gauge assembly. Codes 1 through 9 are indicated by individual short blinks. Code 10 and above are indicated by a series of long and short blinks. One long blink equals 10 short blinks. Add the long and short blinks together to determine the code.

**Example: DTC 1-1**

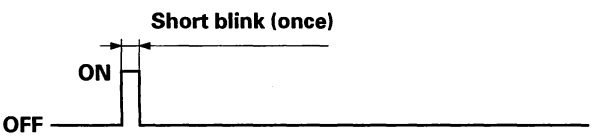


**Example: DTC 15-5**

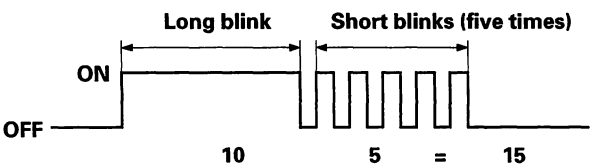


3. Record all fuel and emissions DTCs and A/T DTCs.

4. If there is a fuel and emissions DTC, first check the fuel and emissions system as indicated by the DTC (except DTC 70, DTC 70 means there is one or more A/T DTCs, and no problems were detected in the fuel and emissions circuit of the PCM).

5. Clear the DTC and data.

6. Drive the vehicle for several minutes under the same conditions as those indicated by the freeze data, and then recheck for DTC. If the A/T DTC returns, go to the indicated DTC's troubleshooting. If the DTC does not return, there was an intermittent problem within the circuit. Make sure all pins and terminals in the circuit are tight.

(cont'd)

Protected by AR



## General Troubleshooting Information (cont'd)

### How to Troubleshoot Circuits at the PCM Connectors

NOTE: The PCM overwrite data and monitors the EVAP system for up to 30 minutes after the ignition switch is turned OFF. Jumping the SCS line after turning the ignition switch OFF cancels this function. Disconnecting the PCM during this function, without jumping the SCS line first, can damage the PCM.

1. Jump the SCS line with the HDS.
2. Disconnect the PCM connectors A, B and C.

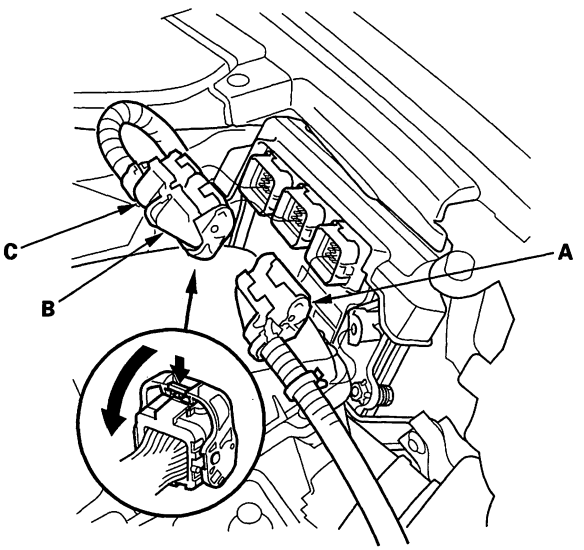


3. Check the connector inspection port (A) size, and select a suitable pin probe.

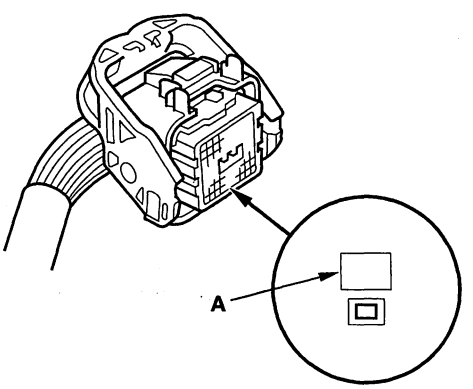


4. Connect one side of the patch cord (A) terminal to a digital multimeter (B), and connect the other side of the patch cord terminals to a commercially available banana jack (Pomona Electronics Tool No. 3563 or equivalent) (C).

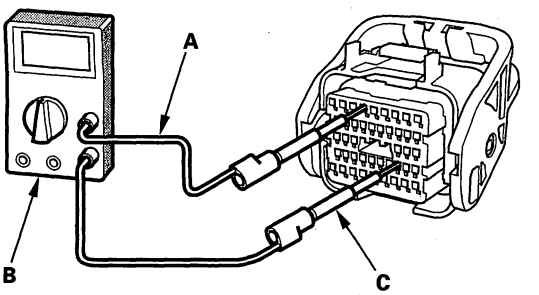


5. Gently slide the pin probe into the inspection port at the connector terminal side. Always use the inspection port. Do not slide the probe into the connector terminals.

**NOTICE**

- For accurate result, always use the pin probe (male).
- To prevent damage to the connector terminals, do not insert test equipment probes, paper clips, or other substitutes as they can damage the terminals. Damaged terminals cause a poor connection and an incorrect measurement.
- Do not puncture the insulation on a wire. Punctures can cause poor or intermittent electrical connections.



BACK

Protected by AR

## Clear A/T DTCs Procedures

1. Connect the HDS to the DLC (A).

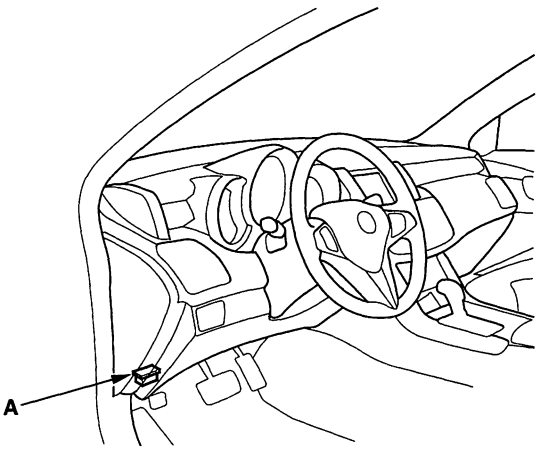


2. Turn the ignition switch ON (II).
3. Clear the DTC(s) on the HDS screen.

   NOTE: If the HDS does not communicate with the PCM, troubleshoot the DLC circuit (see page 11-229).

## OBD Status

The OBD status shows the current system status of each DTC and all of the parameters. This function is used to see if the technician's repair was successfully finished. The results of diagnostic tests for the DTC are displayed as:

- PASSED: On board diagnosis is successfully finished.
- FAILED: On board diagnosis has finished but failed.
- NOT COMPLETED: The on board diagnosis was running but is out of the enable conditions of the DTC.

## How to End a Troubleshooting Session (required after any troubleshooting)

1. Reset the PCM with the HDS while the engine is stopped.
2. Turn the ignition switch OFF.
3. Turn the ignition switch ON (II), and wait for 30 seconds.
4. Turn the ignition switch OFF, and disconnect the HDS from the DLC.
5. Do the PCM idle learn procedure (see page 11-339).
6. Start the engine in the P or N position, and warm it up to normal operating temperature (the radiator fan comes on).
7. To verify that the problem is repaired, test-drive the vehicle for several minutes at speeds over 30 mph (50 km/h) or under the same conditions as those indicated by the freeze data.

(cont'd)

Protected by AR



## General Troubleshooting Information (cont'd)

### Updating the PCM

**Special Tools Required**
- Honda diagnosis system (HDS) TDSGD2200
- Honda interface module (HIM) EQS05A35570
- HDS pocket tester TDSS3557011401

These special tools are available through the American Honda Tool and Equipment Program 1-888-424-6857.

Use this procedure when you have to update the PCM during troubleshooting procedures.

NOTE:
- Make sure the HDS/HIM has the latest software version.
- Before you update the PCM, make sure the battery in the vehicle is fully charged.
- Never turn the ignition switch OFF during the update. If there is a problem with the update, leave the ignition switch ON.
- To prevent PCM damage, do not operate anything electrical (headlights, audio system, brakes, A/C, power windows, moonroof (if equipped), door locks, and whatnot) during the update.
- To ensure the latest program is installed, do a PCM update whenever the PCM is substituted or replaced.
- You cannot update a PCM with a program it already has. It will only accept a new program.
- High temperature in the engine compartment might cause the PCM to become too hot to run the update. If the engine has been running before this procedure, open the hood and cool the engine compartment.
- If you need to diagnose the Honda interface module (HIM) because the HIM's red (#3) lamp came on or was flashed during the update, leave the ignition switch in the ON (II) position when you disconnect the HIM from the data link connector (DLC). This will prevent PCM damage.

1. Turn the ignition switch ON (II), but do not start the engine.

2. Connect the HDS to the DLC (A).

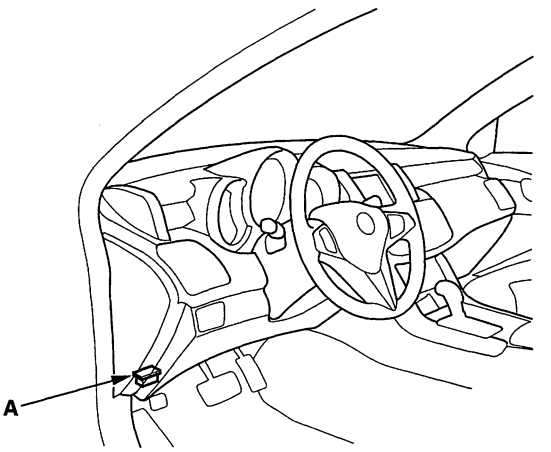


3. Make sure the HDS communicates with the PCM. If it doesn't, go to the DLC circuit troubleshooting (see page 11-229). If you are returning from the DLC circuit troubleshooting, skip step 4 to 5, and clean the throttle body after updating the PCM (see page 11-7).

4. Select the INSPECTION MENU with the HDS.

5. Select the ETCS TEST, then select the TP POSITION CHECK, and follow the HDS screen prompts.

   NOTE: If the TP POSITION CHECK indicates FAILED, continue this procedure.

6. Exit the HDS diagnosis system, then select the update mode, and follow the screen prompts to update the PCM.



BACK

Protected by AR

7. If the software in the PCM is the latest, disconnect the HDS/HIM from the DLC, and go back to the procedure that you were doing. If the software in the PCM is not the latest, follow the instructions on the screen. If prompted to choose the PGM-FI system or the A/T system, make sure you update both.

   NOTE: If the PCM update system requires you to cool the PCM, follow the instructions on the screen. If you run into a problem during the update procedure (programming takes over 15 minutes, status bar goes over 100 %, D or immobilizer light flashes, HDS tablet freezes, and whatnot), follow these steps to minimize the chance of damaging the PCM:
   - Leave the ignition switch in the ON (II) position.
   - Connect a jumper battery (do not connect a battery charger).
   - Shut down the HDS.
   - Disconnect the HDS from the DLC.
   - Reboot the HDS.
   - Reconnect the HDS to the DLC, and try the update procedure again.

8. Select the ETCS TEST, then select the TP POSITION CHECK, and follow the HDS screen prompts. If the TP POSITION CHECK failed, clean the throttle body (see page 11-394).

9. Do the PCM idle learn procedure (see page 11-339).

10. Do the CKP learn procedure (see page 11-4).

(cont'd)

Protected by AR



## General Troubleshooting Information (cont'd)

### Substituting the PCM

**Special Tools Required**
- Honda diagnosis system (HDS) TDSGD2200
- Honda interface module (HIM) EQS05A35570
- HDS pocket tester TDSS3557011401

These special tools are available through the American Honda Tool and Equipment Program 1-888-424-6857.

Use this procedure when you have to substitute a known-good PCM during troubleshooting procedures.

1. Make sure you have the anti-theft codes for the audio system and the navigation system (if equipped), then write down the audio presets.
2. Turn the ignition switch OFF.
3. Connect the HDS to the DLC (A).

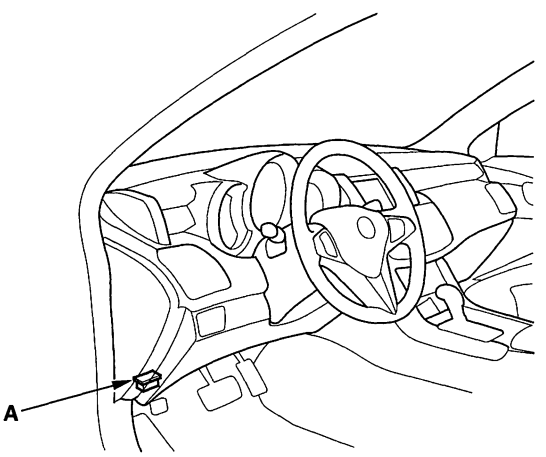


4. Turn the ignition switch ON (II).
5. Make sure the HDS communicates with the PCM. If it doesn't, go to the DLC circuit troubleshooting (see page 11-229). If you are returning from the DLC circuit troubleshooting, skip step 5 to 6, and clean the throttle body after substituting the PCM (see page 11-7).
6. Select the INSPECTION MENU with the HDS.
7. Select the ETCS TEST, then select the TP POSITION CHECK, and follow the HDS screen prompts.

   NOTE: If the TP POSITION CHECK indicates FAILED, continue this procedure.
8. Turn the ignition switch OFF.
9. Disconnect the negative cable from the battery, then disconnect the positive cable.
10. Disconnect PCM connectors A, B, and C, and remove the harness clamp from the PCM bracket.
11. Remove bracket mounting bolts, and remove the PCM.
12. Remove the PCM cover, and remove the mounting bracket from the PCM.
13. Install the PCM and battery cables in the reverse order of removal.
14. Turn the ignition switch ON (II).

    NOTE: If DTC P0630 "VIN not Programmed or Mismatch" will be stored because the VIN has not been programmed into the PCM; ignore it, and continue this procedure.
15. Manually input the VIN to the PCM with the HDS.
16. Update the PCM if it does not have the latest software.
17. Select the IMMOBI SYSTEM with the HDS.
18. Enter the immobilizer code using the PCM replacement procedure in the HDS; this allows you to start the engine.
19. Reset the PCM with the HDS.
20. Select the ETCS TEST, then select the TP POSITION CHECK, and follow the HDS screen prompts. If the TP POSITION CHECK failed, clean the throttle body (see page 11-394).
21. Do the PCM idle learn procedure (see page 11-339).
22. Do the CKP learn procedure (see page 11-4).
23. Enter the anti-theft codes for the audio system and the navigation system (if equipped), then enter the audio presets, and set the clock.



BACK

Protected by AR

## DTC Troubleshooting Index

NOTE: Record all freeze data and review General Troubleshooting Information (see page 14-4) before you troubleshoot.

| DTC*(1) | D Indicator | MIL | Detection Item | Page |
|---|---|---|---|---|
| P0107 (12-7) | Blinks | OFF or ON*(3) | Manifold absolute pressure (MAP) sensor circuit low voltage input | (see page 14-80) |
| P0108 (12-8) | Blinks | OFF or ON*(3) | Manifold absolute pressure (MAP) sensor circuit high voltage input | (see page 14-81) |
| P0335 (88-2) | Blinks | OFF or ON*(3) | Crankshaft position (CKP) sensor A no signal | (see page 14-82) |
| P0339 (88-6) | Blinks | OFF or ON*(3) | Crankshaft position (CKP) sensor A intermittent interruption | (see page 14-83) |
| P0365 (89-2) | Blinks | OFF or ON*(3) | Camshaft position (CMP) sensor B no signal | (see page 14-84) |
| P0369 (89-6) | Blinks | OFF or ON*(3) | Camshaft position (CMP) sensor B intermittent interruption | (see page 14-85) |
| P0705 (5-2)*(2) | Blinks | ON | Transmission range switch (multiple shift-position input) (short) | (see page 14-86) |
| P0706 (6-2)*(2) | Not blinks | ON | Transmission range switch (open) | (see page 14-88) |
| P0711 (28-5)*(2) | Blinks | OFF | ATF temperature sensor (range/performance) | (see page 14-90) |
| P0712 (28-3)*(2) | Blinks | OFF | ATF temperature sensor (short) | (see page 14-91) |
| P0713 (28-4)*(2) | Blinks | OFF | ATF temperature sensor (open) | (see page 14-93) |
| P0716 (15-5)*(2) | Blinks | ON | Input shaft (mainshaft) speed sensor (range/performance) | (see page 14-96) |
| P0717 (15-3)*(2) | Blinks | ON | Input shaft (mainshaft) speed sensor (no signal input) | (see page 14-96) |
| P0718 (15-6)*(2) | Blinks | ON | Input shaft (mainshaft) speed sensor (intermittent failure) | (see page 14-102) |
| P0721 (9-5)*(2) | Blinks | ON | Output shaft (countershaft) speed sensor (range/performance) | (see page 14-107) |
| P0722 (9-3)*(2) | Blinks | ON | Output shaft (countershaft) speed sensor (no signal input) | (see page 14-107) |
| P0723 (9-6)*(2) | Blinks | ON | Output shaft (countershaft) speed sensor (intermittent failure) | (see page 14-113) |
| P0731 (64-1) | Blinks | OFF | 1st gear incorrect ratio | (see page 14-118) |
| P0732 (64-2) | Blinks | OFF | 2nd gear incorrect ratio | (see page 14-119) |
| P0733 (64-3) | Blinks | OFF | 3rd gear incorrect ratio | (see page 14-120) |
| P0734 (64-4) | Blinks | OFF | 4th gear incorrect ratio | (see page 14-121) |
| P0735 (64-5) | Blinks | OFF | 5th gear incorrect ratio | (see page 14-122) |

NOTE:
* (1): The DTC in parentheses is the Honda code that you will see when you use the SCS mode. The first number(s) before the - (hyphen) is the flash code the D indicator indicates when the data link connector (DLC) is connected to the HDS, and in the SCS mode.
* (2): This code is caused by an electrical circuit problem and cannot be caused by a mechanical problem in the transmission.
* (3): The MIL comes on when the PGM-FI system detects the same failure.

(cont'd)

Protected by AR



## DTC Troubleshooting Index (cont'd)

NOTE: Record all freeze data and review General Troubleshooting Information (see page 14-4) before you troubleshoot.

| DTC * (1) | D Indicator | MIL | Detection Item | Page |
|---|---|---|---|---|
| P0741 (40-3) | Not blinks | ON | Torque converter clutch circuit performance or stuck OFF | (see page 14-123) |
| P0746 (76-3) | Blinks | ON | A/T clutch pressure control solenoid valve A stuck OFF | (see page 14-124) |
| P0747 (76-4) | Blinks | ON | A/T clutch pressure control solenoid valve A stuck ON | (see page 14-125) |
| P0751 (70-3) | Blinks | ON | Shift solenoid valve A stuck OFF | (see page 14-126) |
| P0752 (70-4) | Blinks | ON | Shift solenoid valve A stuck ON | (see page 14-127) |
| P0756 (71-3) | Blinks | ON | Shift solenoid valve B stuck OFF | (see page 14-128) |
| P0757 (71-4) | Blinks | ON | Shift solenoid valve B stuck ON | (see page 14-129) |
| P0761 (72-3) | Blinks | ON | Shift solenoid valve C stuck OFF | (see page 14-130) |
| P0762 (72-4) | Blinks | ON | Shift solenoid valve C stuck ON | (see page 14-131) |
| P0766 (73-3) | Blinks | ON | Shift solenoid valve D stuck OFF | (see page 14-132) |
| P0767 (73-4) | Blinks | ON | Shift solenoid valve D stuck ON | (see page 14-133) |
| P0776 (77-3) | Blinks | ON | A/T clutch pressure control solenoid valve B stuck OFF | (see page 14-134) |
| P0777 (77-4) | Blinks | ON | A/T clutch pressure control solenoid valve B stuck ON | (see page 14-135) |
| P0796 (78-3) | Blinks | ON | A/T clutch pressure control solenoid valve C stuck OFF | (see page 14-136) |
| P0797 (78-4) | Blinks | ON | A/T clutch pressure control solenoid valve C stuck ON | (see page 14-137) |
| P0812 (65-2) | Blinks | ON | Transmission range switch ATP R switch | (see page 14-138) |
| P0842 (25-3) | Blinks | ON | 2nd clutch transmission fluid pressure switch (short or stuck ON) | (see page 14-141) |
| P0843 (25-4) | Blinks | ON | 2nd clutch transmission fluid pressure switch (open or stuck OFF) | (see page 14-143) |
| P0847 (26-3) | Blinks | ON | 3rd clutch transmission fluid pressure switch (short or stuck ON) | (see page 14-146) |
| P0848 (26-4) | Blinks | ON | 3rd clutch transmission fluid pressure switch (open or stuck OFF) | (see page 14-148) |
| P0872 (27-3) | Blinks | OFF | 4th clutch transmission fluid pressure switch (short or stuck ON) | (see page 14-151) |
| P0873 (27-4) | Blinks | OFF | 4th clutch transmission fluid pressure switch (open or stuck ON) | (see page 14-153) |

NOTE:

* (1): The DTC in parentheses is the Honda code that you will see when you use the SCS mode. The first number(s) before the - (hyphen) is the flash code the D indicator indicates when the data link connector (DLC) is connected to the HDS, and in the SCS mode.
* (2): This code is caused by an electrical circuit problem and cannot be caused by a mechanical problem in the transmission.



BACK

Protected by AR

NOTE: Record all freeze data and review General Troubleshooting Information (see page 14-4) before you troubleshoot.

| DTC *(1) | D Indicator | MIL | Detection Item | Page |
|---|---|---|---|---|
| P0962 (16-3) *(2) | Blinks | ON | A/T clutch pressure control solenoid valve A (open/ short) | (see page 14-156) |
| P0963 (16-4) *(2) | Blinks | ON | A/T clutch pressure control solenoid valve A | (see page 14-159) |
| P0966 (23-3) *(2) | Blinks | ON | A/T clutch pressure control solenoid valve B (open/ short) | (see page 14-161) |
| P0967 (23-4) *(2) | Blinks | ON | A/T clutch pressure control solenoid valve B | (see page 14-164) |
| P0970 (29-3) *(2) | Blinks | ON | A/T clutch pressure control solenoid valve C (open/ short) | (see page 14-166) |
| P0971 (29-4) *(2) | Blinks | ON | A/T clutch pressure control solenoid valve C | (see page 14-169) |
| P0973 (7-3) *(2) | Blinks | ON | Shift solenoid valve A (short) | (see page 14-171) |
| P0974 (7-4) *(2) | Blinks | ON | Shift solenoid valve A (open) | (see page 14-174) |
| P0976 (8-3) *(2) | Blinks | ON | Shift solenoid valve B (short) | (see page 14-177) |
| P0977 (8-4) *(2) | Blinks | ON | Shift solenoid valve B (open) | (see page 14-180) |
| P0979 (22-3) *(2) | Blinks | ON | Shift solenoid valve C (short) | (see page 14-183) |
| P0980 (22-4) *(2) | Blinks | ON | Shift solenoid valve C (open) | (see page 14-186) |
| P0982 (60-3) | Blinks | ON | Shift solenoid valve D (short) | (see page 14-189) |
| P0983 (60-4) | Blinks | ON | Shift solenoid valve D (open) | (see page 14-192) |
| P16C0 (99-1) | Not blinks | ON | PCM A/T control system incomplete updated | (see page 14-195) |
| P1717 (62-1) | Blinks | ON | Transmission range switch ATP RVS switch (open) | (see page 14-196) |
| P1743 (45-11) | Blinks | OFF | Hydraulic control system (Shift valve E stuck OFF) | (see page 14-199) |
| P1744 (45-12) | Blinks | OFF | Hydraulic control system (Shift valve E stuck ON) | (see page 14-200) |
| P1745 (45-13) | Blinks | OFF | Hydraulic control system (Servo control valve or servo valve stuck OFF) | (see page 14-201) |
| P1780 (49-1) | Blinks | OFF | Shift control system (transmission default mode) | (see page 14-202) |
| P2122 (20-3) | Blinks | ON | Accelerator pedal position (APP) sensor A (throttle position sensor D) circuit low voltage | (see page 14-203) |
| P2123 (20-4) | Blinks | ON | Accelerator pedal position (APP) sensor A (throttle position sensor D) circuit high voltage | (see page 14-204) |
| U0028 (107-1) | Blinks | OFF or ON *(3) | F-CAN malfunction (F-CAN bus OFF) | (see page 14-205) |
| U0122 (107-4) | Blinks | OFF | F-CAN malfunction (PCM-to-VSA control unit) | (see page 14-206) |
| U0155 (107-3) | Blinks | OFF or ON *(3) | F-CAN malfunction (PCM-to-gauge control module) | (see page 14-208) |

NOTE:

* (1): The DTC in parentheses is the Honda code that you will see when you use the SCS mode. The first number(s) before the - (hyphen) is the flash code the D indicator indicates when the data link connector (DLC) is connected to the HDS, and in the SCS mode.
* (2): This code is caused by an electrical circuit problem and cannot be caused by a mechanical problem in the transmission.
* (3): The MIL comes on when the PGM-FI system detects the same failure.

Protected by AR



## Symptom Troubleshooting Index

| Symptom | Probable cause(s) | Notes |
|---|---|---|
| When you turn the ignition switch ON (II), the D indicator comes on and stays on in all shift lever positions, or it never comes on at all | • F-CAN communication line error<br>• Gauge control module defective<br>• PCM defective | • Check the F-CAN communication line for a DTC (see page 11-213).<br>• Check indicator drive circuit in the gauge control module by gauge control module self-diagnostic function (see page 22-258). |
| A/T gear position indicator does not come on while the shift lever is in that position | • F-CAN communication line error<br>• Gauge control module defective<br>• PCM defective<br>• Transmission range switch defective | • Check the F-CAN communication line for a DTC (see page 11-213).<br>• Check indicator drive circuit in the gauge control module by gauge control module self-diagnostic function (see page 22-258).<br>• Inspect the transmission range switch (see page 14-290). |
| Shift indicator does not work | • F-CAN communication line error<br>• Gauge control module defective<br>• PCM defective<br>• Transmission range switch defective | • Check the F-CAN communication line for a DTC (see page 11-213).<br>• Check the F-CAN communication line by gauge control module self-diagnostic function (see page 22-258).<br>• Check indicator drive circuit in the gauge control module by gauge control module self-diagnostic function (see page 22-258). |
| When you press the paddle shifter + (upshift switch) in D and S, the transmission does not upshift | A problem in the paddle shifter + (upshift switch) circuit | Check the paddle shifter + (upshift switch) circuit (see page 14-295). |
| When you press the paddle shifter − (downshift switch) in D and S, the transmission does not downshift | A problem in the paddle shifter − (downshift switch) circuit | Check the paddle shifter − (downshift switch) circuit (see page 14-297). |
| M indicator does not come on even though the paddle shifter + (upshift switch) or paddle shifter − (downshift switch) is operated in sequential sportshift mode | • F-CAN communication line error<br>• Gauge control module defective<br>• PCM defective | • Check the F-CAN communication line for a DTC (see page 11-213).<br>• Check indicator drive circuit in the gauge control module by gauge control module self-diagnostic function (see page 22-258). |



BACK

Protected by AR

| Symptom | Probable cause(s) | Notes |
|---|---|---|
| Shift lever cannot be moved from P while you are pressing on the brake pedal | • Accelerator pedal position sensor circuit<br>• Accelerator pedal position sensor defective<br>• Brake pedal position switch circuit<br>• Brake pedal position switch defective<br>• Shift lock solenoid defective<br>• Shift lock solenoid control circuit<br>• Shift lock solenoid mechanism<br>• Throttle body defective<br>• Transmission range switch ATP P switch stuck OFF<br>• Transmission range switch ATP P switch line opened | • Troubleshoot the shift lock system circuit (see page 14-305).<br>• Test the shift lock solenoid (see page 14-311).<br>• Inspect the transmission range switch (see page 14-290). |
| Ignition switch cannot be moved from ACC (I) to LOCK (0) (key is pushed in, shift lever in P) | • Interlock control system circuit<br>• Key interlock solenoid stuck ON<br>• Park pin switch stuck ON<br>• Transmission range switch ATP P line opened | • Troubleshoot the key interlock system circuit (see page 14-310).<br>• Inspect the transmission range switch (see page 14-290). |
| HDS does not communicate with the PCM or the vehicle | DLC circuit | Troubleshoot the DLC circuit (see page 11-229). |

(cont'd)

Protected by AR



## Symptom Troubleshooting Index (cont'd)

| Symptom | Probable cause(s) | Notes |
|---|---|---|
| Engine runs, but vehicle does not move in any gear | 1. Low ATF level<br>2. Shift cable broken or out of adjustment<br>3. Connection between shift cable and transmission or body is worn<br>4. ATF pump worn or binding<br>5. Regulator valve stuck or spring worn<br>6. ATF strainer clogged<br>7. Mainshaft worn or damaged<br>8. Final gears worn or damaged<br>9. Park mechanism defective<br>10. Transmission-to-engine assembly error<br>11. Axle disengaged | • Check the ATF level and check the ATF cooler lines for leakage and loose connections. If necessary, clean the ATF cooler lines.<br>• Check for a loose shift cable at the shift lever and the transmission control lever.<br>• Improper alignment of ATF pump and torque converter housing may cause ATF pump seizure. The symptoms are mostly an rpm-related ticking noise or a high pitched squeak.<br>• Check the line pressure.<br>• Check the ATF strainer for debris. If the strainer is clogged, find the damaged components that caused the debris.<br>• Inspect the differential pinion gears for wear. If the differential pinion gears are worn, replace the differential assembly, replace the ATF strainer, and thoroughly clean the transmission, and clean the cooler and lines. Replace the torque converter.<br>• Be careful not to damage the torque converter housing when replacing the main ball bearing. You may also damage the ATF pump when you torque down the main valve body. This will result in ATF pump seizure if not detected. Use the proper tools.<br>• Install the main seal flush with the torque converter housing. If you push it into the torque converter housing until it bottoms out, it will block the fluid return passage and result in damage. |



BACK

Protected by AR

| Symptom | Probable cause(s) | Notes |
|---|---|---|
| Vehicle moves in R, but not in D or 1st in S | 1. 1st accumulator defective<br>2. Idler gears worn or damaged<br>3. 1st clutch defective | • Check the 1st clutch pressure.<br>• Inspect the secondary shaft and 1st/1st-hold clutch assembly for wear and damage.<br>• Inspect the clutch piston, clutch piston check valve, and O-rings. Check the spring retainer for wear and damage. Inspect the clutch end-plate-to-top-disc clearance. If the clearance is out of tolerance, inspect the clutch discs and plates for wear and damage, and inspect the clutch waved-plate height. If the discs and flat-plates are worn or damaged, replace the discs and flat-plates as a set. If the waved-plate height is out of tolerance, replace the waved-plate. If the discs and plates are OK, adjust the clearance with the clutch end-plate. |
| Vehicle moves in D and R, but not in 1st in S | 1. 1st-hold accumulator defective<br>2. 1st-hold clutch defective | • Check the 1st-hold clutch pressure.<br>• Inspect the secondary shaft and 1st/1st-hold clutch assembly for wear and damage.<br>• Inspect the clutch piston, clutch piston check valve, and O-rings. Check the spring retainer for wear and damage. Inspect the clutch end-plate-to-top-disc clearance. If the clearance is out of tolerance, inspect the clutch discs and plates for wear and damage, and inspect the clutch waved-plate height. If the discs and flat-plates are worn or damaged, replace the discs and flat-plates as a set. If the waved-plate height is out of tolerance, replace the waved-plate. If the discs and plates are OK, adjust the clearance with the clutch end-plate. |
| Vehicle moves in D and R, but not in 2nd in S | 1. 2nd accumulator defective<br>2. 2nd clutch defective | • Check the 2nd clutch pressure.<br>• Inspect the secondary shaft and 2nd clutch assembly for wear and damage.<br>• Inspect the clutch piston, clutch piston check valve, and O-rings. Check the spring retainer for wear and damage. Inspect the clutch end-plate-to-top-disc clearance. If the clearance is out of tolerance, inspect the clutch discs and plates for wear and damage, and inspect the clutch waved-plate height. If the discs and flat-plates are worn or damaged, replace the discs and flat-plates as a set. If the waved-plate height is out of tolerance, replace the waved-plate. If the discs and plates are OK, adjust the clearance with the clutch end-plate. |

(cont'd)

Protected by AR



## Symptom Troubleshooting Index (cont'd)

| Symptom | Probable cause(s) | Notes |
|---|---|---|
| Vehicle moves in D and S, but not in R (or moves forward in R) | 1. Shift fork shaft stuck<br>2. Modulator valve defective<br>3. Reverse CPC valve defective<br>4. 5th accumulator defective<br>5. 5th clutch defective<br>6. Reverse gears worn or damaged | • Check the line pressure and 5th clutch pressure.<br>• Check for a missing shift fork bolt on the shift fork shaft.<br>• Check the ATF strainer for debris. If the ATF strainer is clogged with particles of steel or aluminum, inspect the ATF pump. If the ATF pump is OK, find the damaged components that caused the debris. If no cause for the contamination is found, replace the torque converter.<br>• Inspect the reverse selector gear teeth chamfers, and inspect the engagement teeth chamfers of the countershaft 5th gear and reverse gear. Replace the reverse gears and the reverse selector if they are worn or damaged. If the transmission makes clicking, grinding, or whirring noises, also replace the mainshaft 5th gear, reverse idler gear, and countershaft 5th gear.<br>• Inspect the clutch piston, clutch piston check valve, and O-rings. Check the spring retainer for wear and damage. Inspect the clutch end-plate-to-top-disc clearance. If the clearance is out of tolerance, inspect the clutch discs and plates for wear and damage, and inspect the clutch waved-plate height. If the discs and flat-plates are worn or damaged, replace the discs and flat-plates as a set. If the waved-plate height is out of tolerance, replace the waved-plate. If the discs and plates are OK, adjust the clearance with the clutch end-plate. |
| Poor acceleration; flares when starting off in D, S, and R | 1. Low ATF level<br>2. Shift cable broken or out of adjustment<br>3. ATF pump worn or binding<br>4. Regulator valve stuck or spring worn<br>5. ATF strainer clogged<br>6. Torque converter check valve defective | • Check the ATF level and check the ATF cooler lines for leakage and loose connections. If necessary, clean the ATF cooler lines.<br>• Check for a loose shift cable at the shift lever and the transmission control lever.<br>• Check the line pressure.<br>• Check the ATF strainer for debris. If the strainer is clogged, find the damaged components that caused the debris.<br>• Improper alignment of ATF pump and torque converter housing may cause ATF pump seizure. The symptom is mostly an rpm-related ticking noise or a high pitched squeak.<br>• Be careful not to damage the torque converter housing when replacing the main ball bearing. You may also damage the ATF pump when you torque down the main valve body. This will result in ATF pump seizure if not detected. Use the proper tools. |



BACK

Protected by AR

| Symptom | Probable cause(s) | Notes |
|---|---|---|
| Poor acceleration; flares when starting off in D, S, and R; stall speed high in D | 1. 1st accumulator defective<br>2. 1st clutch defective | • Check the 1st clutch pressure.<br>• Inspect the clutch piston, clutch piston check valve, and O-rings. Check the spring retainer for wear and damage. Inspect the clutch end-plate-to-top-disc clearance. If the clearance is out of tolerance, inspect the clutch discs and plates for wear and damage, and inspect the clutch waved-plate height. If the discs and flat-plates are worn or damaged, replace the discs and flat-plates as a set. If the waved-plate height is out of tolerance, replace the waved-plate. If the discs and plates are OK, adjust the clearance with the clutch end-plate. |
| Poor acceleration; flares when starting off in D, S, and R; stall speed high in R | 1. Shift solenoid valve C defective<br>2. Shift cable broken or out of adjustment<br>3. Reverse CPC valve defective<br>4. 5th accumulator defective<br>5. 5th clutch defective | • Check for a stored DTC, and check for loose connectors. Inspect the O-ring, and check the shift solenoid valve seizure.<br>• Check for a loose shift cable at the shift lever and the transmission control lever.<br>• Check the 5th clutch pressure.<br>• Inspect the clutch piston, clutch piston check valve, and O-rings. Check the spring retainer for wear and damage. Inspect the clutch end-plate-to-top-disc clearance. If the clearance is out of tolerance, inspect the clutch discs and plates for wear and damage, and inspect the clutch waved-plate height. If the discs and flat-plates are worn or damaged, replace the discs and flat-plates as a set. If the waved-plate height is out of tolerance, replace the waved-plate. If the discs and plates are OK, adjust the clearance with the clutch end-plate. |
| Poor acceleration; flares when starting off in D, S, and R; stall speed low | 1. Shift solenoid valve D defective<br>2. Torque converter one-way clutch defective<br>3. Engine output low<br>4. Torque converter clutch piston defective<br>5. Lock-up shift valve defective | Check for a stuck lock-up valve in the valve body. |
| Engine idle vibration | 1. Low ATF level<br>2. Torque converter clutch solenoid valve defective<br>3. Drive plate defective or transmission misassembled<br>4. Engine output low<br>5. Torque converter clutch piston defective<br>6. ATF pump worn or binding<br>7. Lock-up shift valve defective | • Adjust the engine and transmission mounts.<br>• Check the ATF level and check the ATF cooler lines for leakage and loose connections. If necessary, clean the ATF cooler lines. |

(cont'd)

Protected by AR



## Symptom Troubleshooting Index (cont'd)

| Symptom | Probable cause(s) | Notes |
|---|---|---|
| Vehicle moves in N | 1. Excessive ATF<br>2. Foreign material in separator plate orifice<br>3. Relief valve defective<br>4. Lubrication control valve defective<br>5. 1st-hold clutch defective<br>6. 1st clutch defective<br>7. 2nd clutch defective<br>8. 3rd clutch defective<br>9. 4th clutch defective<br>10. 5th clutch defective<br>11. Clutch end plate clearance incorrect<br>12. Needle bearing seized up, worn, or damaged<br>13. Thrust washer seized up, worn, or damaged | • Check the ATF level, and drain the ATF if necessary.<br>• Check all clutch pressures.<br>• Inspect the clutch piston, clutch piston check valve, and O-rings. Check the spring retainer for wear and damage. Inspect the clutch end-plate-to-top-disc clearance. If the clearance is out of tolerance, inspect the clutch discs and plates for wear and damage, and inspect the clutch waved-plate height. If the discs and flat-plates are worn or damaged, replace the discs and flat-plates as a set. If the waved-plate height is out of tolerance, replace the waved-plate. If the discs and plates are OK, adjust the clearance with the clutch end-plate. |
| Late shift after shifting from N to D or S, or excessive shock when shifting | 1. Shift solenoid valve C defective<br>2. A/T clutch pressure control solenoid valve A defective<br>3. A/T clutch pressure control solenoid valve B defective<br>4. A/T clutch pressure control solenoid valve C defective<br>5. Shift cable broken or out of adjustment<br>6. Connection between shift cable and transmission or body is worn<br>7. Input shaft (mainshaft) speed sensor defective<br>8. Output shaft (countershaft) speed sensor defective<br>9. ATF temperature sensor defective<br>10. CPC valve A defective<br>11. CPC valve B defective<br>12. CPC valve C stuck<br>13. Foreign material in separator plate orifice<br>14. Shift valve C defective<br>15. Shift valve E defective<br>16. Servo control valve defective<br>17. 1st accumulator defective<br>18. 1st check ball stuck<br>19. One-way check ball stuck<br>20. 1st clutch defective | • Check for a stored DTC, and check for loose connectors.<br>• Inspect the O-ring, and check the shift solenoid valve for seizure.<br>• Inspect the A/T clutch pressure control solenoid valve body gasket and ATF feed pipes for wear and damage. If the A/T clutch pressure control solenoid valve is stuck, inspect the CPC valves.<br>• Check for a loose shift cable at the shift lever and the transmission control lever.<br>• Check the 1st clutch pressure.<br>• Inspect the clutch piston, clutch piston check valve, and O-rings. Check the spring retainer for wear and damage. Inspect the clutch end-plate-to-top-disc clearance. If the clearance is out of tolerance, inspect the clutch discs and plates for wear and damage, and inspect the clutch waved-plate height. If the discs and flat-plates are worn or damaged, replace the discs and flat-plates as a set. If the waved-plate height is out of tolerance, replace the waved-plate. If the discs and plates are OK, adjust the clearance with the clutch end-plate. |



BACK

Protected by AR

| Symptom | Probable cause(s) | Notes |
|---|---|---|
| Late shift after shifting from N to R, or excessive shock when shifting | 1. Shift solenoid valve C defective<br>2. A/T clutch pressure control solenoid valve B defective<br>3. A/T clutch pressure control solenoid valve C defective<br>4. Shift cable broken or out of adjustment<br>5. Connection between shift cable and transmission or body is worn<br>6. Input shaft (mainshaft) speed sensor defective<br>7. Output shaft (countershaft) speed sensor defective<br>8. ATF temperature sensor defective<br>9. Shift fork shaft stuck<br>10. CPC valve C stuck<br>11. Reverse CPC valve defective<br>12. Foreign material in separator plate orifice<br>13. Shift valve E defective<br>14. 5th accumulator defective<br>15. 5th clutch defective | • Check for a stored DTC, and check for loose connectors.<br>• Inspect the O-ring, and check the shift solenoid valve for seizure.<br>• Inspect the A/T clutch pressure control solenoid valve body gasket and ATF feed pipes for wear and damage. If the A/T clutch pressure control solenoid valve is stuck, inspect the CPC valves.<br>• Check for a loose shift cable at the shift lever and the transmission control lever.<br>• Check the 5th clutch pressure.<br>• Inspect the clutch piston, clutch piston check valve, and O-rings. Check the spring retainer for wear and damage. Inspect the clutch end-plate-to-top-disc clearance. If the clearance is out of tolerance, inspect the clutch discs and plates for wear and damage, and inspect the clutch waved-plate height. If the discs and flat-plates are worn or damaged, replace the discs and flat-plates as a set. If the waved-plate height is out of tolerance, replace the waved-plate. If the discs and plates are OK, adjust the clearance with the clutch end-plate. |
| The transmission does not shift | 1. Input shaft (mainshaft) speed sensor defective<br>2. Output shaft (countershaft) speed sensor defective<br>3. Modulator valve defective | • Check for a stored DTC, and check for loose connectors.<br>• Check the line pressure. |
| Erratic shifting: fails to shift in D and S; starts off in 5th | 1. Shift solenoid valve B defective<br>2. Shift valve B defective | • Check for a stored DTC, and check for loose connectors.<br>• Inspect the O-ring, and check the shift solenoid valve for seizure. |
| Erratic shifting: fails to shift in 2nd in S; starts off in 4th | 1. Shift solenoid valve B defective<br>2. Shift valve B defective | • Check for a stored DTC, and check for loose connectors.<br>• Inspect the O-ring, and check the shift solenoid valve for seizure. |
| Erratic shifting: fails to shift in D, S, and 1st in S; starts off in 3rd | 1. Shift solenoid valve A defective<br>2. Shift valve A defective | • Check for a stored DTC, and check for loose connectors.<br>• Inspect the O-ring, and check the shift solenoid valve for seizure. |
| Erratic shifting: fails to shift in 2nd in S; starts off in 1st | 1. Shift solenoid valve A defective<br>2. Shift valve A defective | • Check for a stored DTC, and check for loose connectors.<br>• Inspect the O-ring, and check the shift solenoid valve for seizure. |

(cont'd)

Protected by AR



## Symptom Troubleshooting Index (cont'd)

| Symptom | Probable cause(s) | Notes |
|---|---|---|
| Excessive shock or flares on all upshifts and downshifts | 1. A/T clutch pressure control solenoid valve A defective<br>2. Input shaft (mainshaft) speed sensor defective<br>3. Output shaft (countershaft) speed sensor defective<br>4. ATF temperature sensor defective<br>5. CPC valve A defective<br>6. Foreign material in separator plate orifice | • Check for a stored DTC, and check for loose connectors.<br>• Inspect the A/T clutch pressure control solenoid valve body gasket and ATF feed pipes for wear and damage. If the A/T clutch pressure control solenoid valve is stuck, inspect the CPC valves.<br>• Inspect the sensor O-rings. |
| Excessive shock or flares on 1-2 upshift or 2-1 downshift | 1. A/T clutch pressure control solenoid valve A defective<br>2. A/T clutch pressure control solenoid valve C defective<br>3. 2nd clutch transmission fluid pressure switch defective<br>4. CPC valve A defective<br>5. CPC valve C defective<br>6. Foreign material in separator plate orifice<br>7. 2nd accumulator defective<br>8. 2nd check ball stuck<br>9. 2nd clutch defective | • Check for a stored DTC, and check for loose connectors.<br>• Inspect the A/T clutch pressure control solenoid valve body gasket and ATF feed pipes for wear and damage. If the A/T clutch pressure control solenoid valve is stuck, inspect the CPC valves.<br>• Check for clogged orifice in the transmission fluid pressure switch connector. If the orifice is clogged, remove it and clean the connector.<br>• Check the 1st and 2nd clutch pressures.<br>• Inspect the clutch piston, clutch piston check valve, and O-rings. Check the spring retainer for wear and damage. Inspect the clutch end-plate-to-top-disc clearance. If the clearance is out of tolerance, inspect the clutch discs and plates for wear and damage, and inspect the clutch waved-plate height. If the discs and flat-plates are worn or damaged, replace the discs and flat-plates as a set. If the waved-plate height is out of tolerance, replace the waved-plate. If the discs and plates are OK, adjust the clearance with the clutch end-plate. |



BACK

Protected by AR

| Symptom | Probable cause(s) | Notes |
|---|---|---|
| Excessive shock or flares on 2-3 upshift or 3-2 downshift | 1. Shift solenoid valve C defective<br>2. A/T clutch pressure control solenoid valve B defective<br>3. A/T clutch pressure control solenoid valve C defective<br>4. 3rd clutch transmission fluid pressure switch defective<br>5. CPC valve B defective<br>6. CPC valve C defective<br>7. Foreign material in separator plate orifice<br>8. Shift valve C defective<br>9. 2nd accumulator defective<br>10. 3rd accumulator defective<br>11. 2nd check ball stuck<br>12. 2nd clutch defective<br>13. 3rd clutch defective | • Check for a stored DTC, and check for loose connectors.<br>• Inspect the O-rings, and check the shift solenoid valve for seizure.<br>• Inspect the A/T clutch pressure control solenoid valve body gasket and ATF feed pipes for wear and damage. If the A/T clutch pressure control solenoid valve is stuck, inspect the CPC valves.<br>• Check for clogged orifice in the transmission fluid pressure switch connector. If the orifice is clogged, remove it and clean the connector.<br>• Check the 2nd and 3rd clutch pressures.<br>• Inspect the clutch piston, clutch piston check valve, and O-rings. Check the spring retainer for wear and damage. Inspect the clutch end-plate-to-top-disc clearance. If the clearance is out of tolerance, inspect the clutch discs and plates for wear and damage, and inspect the clutch waved-plate height. If the discs and flat-plates are worn or damaged, replace the discs and flat-plates as a set. If the waved-plate height is out of tolerance, replace the waved-plate. If the discs and plates are OK, adjust the clearance with the clutch end-plate. |
| Excessive shock or flares on 3-4 upshift or 4-3 downshift | 1. Shift solenoid valve C defective<br>2. A/T clutch pressure control solenoid valve B defective<br>3. A/T clutch pressure control solenoid valve A defective<br>4. 4th clutch transmission fluid pressure switch defective<br>5. CPC valve A defective<br>6. CPC valve B defective<br>7. Foreign material in separator plate orifice<br>8. Shift valve C defective<br>9. 3rd accumulator defective<br>10. 4th accumulator defective<br>11. 3rd clutch defective<br>12. 4th clutch defective | • Check for a stored DTC, and check for loose connectors.<br>• Inspect the O-rings, and check the shift solenoid valve for seizure.<br>• Inspect the A/T clutch pressure control solenoid valve body gasket and ATF feed pipes for wear and damage. If the A/T clutch pressure control solenoid valve is stuck, inspect the CPC valves.<br>• Check for clogged orifice in the transmission fluid pressure switch connector. If the orifice is clogged, remove it and clean the connector.<br>• Check the 3rd and 4th clutch pressures.<br>• Inspect the clutch piston, clutch piston check valve, and O-rings. Check the spring retainer for wear and damage. Inspect the clutch end-plate-to-top-disc clearance. If the clearance is out of tolerance, inspect the clutch discs and plates for wear and damage, and inspect the clutch waved-plate height. If the discs and flat-plates are worn or damaged, replace the discs and flat-plates as a set. If the waved-plate height is out of tolerance, replace the waved-plate. If the discs and plates are OK, adjust the clearance with the clutch end-plate. |

(cont'd)

Protected by AR



## Symptom Troubleshooting Index (cont'd)

| Symptom | Probable cause(s) | Notes |
|---|---|---|
| Excessive shock or flares on 4-5 upshift or 5-4 downshift | 1. Shift solenoid valve C defective<br>2. A/T clutch pressure control solenoid valve B defective<br>3. A/T clutch pressure control solenoid valve C defective<br>4. CPC valve B defective<br>5. CPC valve C defective<br>6. Foreign material in separator plate orifice<br>7. Shift valve C defective<br>8. Shift valve E defective<br>9. Kick-down valve or kick-down short valve defective<br>10. 4th accumulator defective<br>11. 5th accumulator defective<br>12. 4th clutch defective<br>13. 5th clutch defective | • Check for a stored DTC, and check for loose connectors.<br>• Inspect the O-rings, and check the shift solenoid valve for seizure.<br>• Inspect the A/T clutch pressure control solenoid valve body gasket and ATF feed pipes for wear and damage. If the A/T clutch pressure control solenoid valve is stuck, inspect the CPC valves.<br>• Check the 4th and 5th clutch pressures.<br>• Inspect the clutch piston, clutch piston check valve, and O-rings. Check the spring retainer for wear and damage. Inspect the clutch end-plate-to-top-disc clearance. If the clearance is out of tolerance, inspect the clutch discs and plates for wear and damage, and inspect the clutch waved-plate height. If the discs and flat-plates are worn or damaged, replace the discs and flat-plates as a set. If the waved-plate height is out of tolerance, replace the waved-plate. If the discs and plates are OK, adjust the clearance with the clutch end-plate. |
| Noise from transmission in all shift lever positions | 1. ATF pump worn or binding<br>2. Idler gears worn or damaged<br>3. Thrust washer seized up, worn, or damaged | Improper alignment of ATF pump and torque converter housing may cause ATF pump seizure. The symptoms are mostly an rpm-related ticking noise or a high pitched squeak. |
| Vehicle does not accelerate above 31 mph (50 km/h) | Torque converter one-way clutch defective | Replace torque converter. |
| Vibration in all shift lever positions | Drive plate defective or transmission misassembled | • Adjust the engine and transmission mounts.<br>• Check the stall speed. |
| Shift lever does not operate smoothly | 1. Transmission range switch defective or out of adjustment<br>2. Shift cable broken or out of adjustment<br>3. Connection between shift cable and transmission or body is worn | • Check for a stored DTC, and check for loose connectors.<br>• Inspect the transmission range switch. If the transmission range switch is faulty, replace it. If the transmission range switch is out of adjustment, adjust it and the shift cable.<br>• Check for a loose shift cable at the shift lever and the transmission control lever. |
| Transmission does not shift into P | 1. Shift cable broken or out of adjustment<br>2. Connection between shift cable and transmission or body is worn<br>3. Park mechanism defective | • Check for a loose shift cable at the shift lever and the transmission control lever.<br>• Check the park pawl, control shaft, and park lever link for wear and damage. Check if the control shaft lever pin is disengage from the manual valve guide. |



BACK

Protected by AR

| Symptom | Probable cause(s) | Notes |
|---|---|---|
| Torque converter clutch does not disengage | 1. Shift solenoid valve D defective<br>2. A/T clutch pressure control solenoid valve C defective<br>3. Torque converter clutch piston defective<br>4. Lock-up shift valve defective<br>5. Lock-up control valve defective<br>6. Lock-up timing valve defective | • Check for a stored DTC, and check for loose connectors.<br>• Inspect the A/T clutch pressure control solenoid valve C body gasket for wear and damage. If the A/T clutch pressure control solenoid valve C is stuck, inspect the CPC valves. |
| Torque converter clutch does not operate smoothly | 1. Shift solenoid valve D defective<br>2. A/T clutch pressure control solenoid valve C defective<br>3. Lock-up clutch piston defective<br>4. Torque converter check valve defective<br>5. Lock-up shift valve defective<br>6. Lock-up control valve defective<br>7. Lock-up timing valve defective | • Check for a stored DTC, and check for loose connectors.<br>• Inspect the A/T clutch pressure control solenoid valve C body gasket for wear and damage. If the A/T clutch pressure control solenoid valve C is stuck, inspect the CPC valves.<br>• Center all engine mounts. |
| Torque converter clutch does not engage | 1. Shift solenoid valve D defective<br>2. A/T clutch pressure control solenoid valve C defective<br>3. Input shaft (mainshaft) speed sensor defective<br>4. Output shaft (countershaft) speed sensor defective<br>5. Torque converter clutch piston defective<br>6. Torque converter check valve defective<br>7. Lock-up shift valve defective<br>8. Lock-up control valve defective | • Check for a stored DTC, and check for loose connectors.<br>• Inspect the A/T clutch pressure control solenoid valve C body gasket for wear and damage. If the A/T clutch pressure control solenoid valve C is stuck, inspect the CPC valves. |
| A/T gear position indicator does not indicate shift lever positions | 1. Transmission range switch defective or out of adjustment<br>2. Shift cable broken or out of adjustment<br>3. Connection between shift cable and transmission or body is worn | • Check for a stored DTC, and check for loose connectors.<br>• Inspect the transmission range switch. If the transmission range switch is faulty, replace it. If the transmission range switch is out of adjustment, adjust it and the shift cable.<br>• Check for a loose shift cable at the shift lever and the transmission control lever. |
| Speedometer and odometer do not work | Output shaft (countershaft) speed sensor defective | Check for a stored DTC, and check for loose connectors. |
| Engine does not rev to high rpm, and the transmission upshifts at low rpm (engine at normal operating temperature) | VTEC rocker arms defective | Check the engine rocker arms. |

Protected by AR



## System Description

### General Operation

The automatic transmission is a combination of a three-element torque converter and a four-shaft electronically controlled unit which provides five forward speeds and reverse. The entire unit is positioned in line with the engine.

**Torque Converter, Shafts, Gears, and Clutches**
The torque converter consists of a pump, turbine, and stator assembly in a single unit. The converter housing (pump) is connected to the engine crankshaft and turns as the engine turns. Around the outside of the torque converter is a ring gear which meshes with the starter pinion when the engine is being started. The entire torque converter assembly serves as a flywheel, transmitting power to the transmission mainshaft. The transmission has four parallel shafts: the mainshaft, the countershaft, the secondary shaft, and the intermediary shaft. The mainshaft is in line with the engine crankshaft. The mainshaft includes the 4th and 5th clutches, and gears for 3rd, 4th, 5th, and reverse (reverse gear is integral with the 5th gear). The countershaft includes gears for the final drive, 2nd, idler, 1st, 4th, 5th, and reverse (the final drive gear is integral with the countershaft). The secondary shaft includes the 1st, 1st-hold, and 2nd clutches, and gears for park, 2nd, idler, and 1st. The intermediary shaft includes the 3rd clutch, and gears for 3rd and 4th. The countershaft 5th gear and the countershaft reverse gear can be locked to the countershaft at its left end, providing 5th gear or reverse, depending with which way the selector is moved. The gears on the mainshaft, secondary shaft, and intermediary shaft, are in constant mesh with those on the countershaft. When certain conditions of gears in the transmission are engaged by the clutches, power is transmitted through the mainshaft, and/or to the secondary shaft, intermediary shaft, then to the countershaft to provide drive.

**Electronic Control**
The electronic control system consists of the powertrain control module (PCM), sensors, and seven solenoid valves. Shifting and lock-up are electronically controlled for comfortable driving under all conditions. The PCM is located in the engine compartment.

**Hydraulic Control**
The valve bodies include the main valve body, the regulator valve body, the secondary valve body, and the accumulator body. They are bolted to the torque converter housing. The main valve body contains the manual valve, the modulator valve, the torque converter check valve, shift valves A, B, E, CPC valve A, the relief valve, the servo control valve, the lock-up shift valve, the lock-up timing valve, the lubrication control valve, the lubrication check valve, and the ATF pump gears. The secondary valve body contains shift valves C, D, CPC valves B and C, the reverse CPC valve, and the reverse control valve. The regulator valve body contains the regulator valve, the cooler check valve, the lock-up control valve, and the 3rd accumulator. The accumulator body contains the 1st, 1st-hold, 2nd, 4th, and 5th accumulators, shift solenoid valves A, B, C, and D. Fluid from the regulator valve passes through the manual valve to the various control valves. All the clutch receive fluid from the internal hydraulic circuit.

**Shift Control Mechanism**
To shift gears, the PCM controls shift solenoid valves A, B, and C, and automatic transmission (A/T) clutch pressure control solenoid valves A and B, while receiving input signals from various sensors and switches located throughout the vehicle. The shift solenoid valves shift the positions of the shift valves to switch the port to send hydraulic pressure to the clutches. The A/T clutch pressure control solenoid valves A and B control the CPC valves A and B to shift smoothly between lower and higher gear. This pressurizes a line to one of the clutches, engaging the clutch and its corresponding gear.

**Lock-up Mechanism**
The lock-up mechanism operates in 2nd, 3rd, 4th, and 5th gears in the D and S positions. The pressurized fluid is drained from the back of the torque converter through a fluid passage, causing the torque converter clutch piston to be held against the torque converter cover. As this takes place, the mainshaft rotates at the same speed as the engine crankshaft. Together with hydraulic control, the PCM optimizes the timing and volume of the lock-up mechanism. When shift solenoid valve D is turned on by the PCM, shift solenoid valve D pressure switches the lock-up shift valve lock-up on and off. A/T clutch pressure control solenoid valve C, the lock-up control valve, and the lock-up timing valve control the amount of the lock-up conditions. Shift solenoid valve D is located on the accumulator body in the transmission, and A/T clutch pressure control solenoid valve C is mounted on the transmission housing.



BACK

Protected by AR

**Gear Selection**
The shift lever has five positions; P: PARK, R: REVERSE, N: NEUTRAL, D: DRIVE 1st through 5th gear ranges, and S: DRIVE 1st through 4th gear ranges with automatic shift mode and 1st through 5th with sequential sportshift mode.

| Position | | Description |
|---|---|---|
| P: PARK | | Front wheels locked; park pawl engaged with park gear on countershaft. All clutches are released. |
| R: REVERSE | | Reverse; reverse selector engaged with countershaft reverse gear and 5th clutch engaged. |
| N: NEUTRAL | | All clutches are released. |
| D: DRIVE (1st through 5th) | | General driving; starts off in 1st, shifts automatically to 2nd, 3rd, 4th, then 5th, depending on vehicle speed and accelerator pedal position. Downshifts through 4th, 3rd, 2nd, and 1st on deceleration to stop. D-paddle shift mode is also equipped; the transmission can be shifted manually with the paddle shifter + (upshift switch) and paddle shifter — (downshift switch) under certain particular conditions. The lock-up mechanism operates in 2nd, 3rd, 4th, and 5th gears. |
| S: DRIVE | Automatic shift mode (1st through 4th) | Used for rapid acceleration at highway speeds and general driving, up-hill and down-hill driving; starts off in 1st, shifts automatically to 2nd, 3rd then 4th, depending on vehicle speed and accelerator pedal position. Downshifts through 3rd, 2nd and 1st on deceleration to stop. The lock-up mechanism operates in 2nd, 3rd and 4th gears. |
| | Sequential sportshift mode (1st through 5th) | Manual gear shift driving; vehicle can start off in 1st gear, and does not upshift automatically. Vehicle can also start off in 2nd gear, and does not upshift and downshift automatically. Downshifts automatically to 1st on deceleration to stop. The lock-up mechanism operates in 2nd, 3rd, 4th, and 5th gears. |

Starting is possible only in the P and N positions because of a slide-type neutral-safety switch.

**Automatic Transmission (A/T) Gear Position Indicator**
The A/T gear position indicator in the gauge control module shows which shift lever position has been selected without having look down at the shift lever.

**Shift Indicator and M Indicator**
When the transmission is switched into the sequential sportshift mode, the shift indicator in the gauge control module displays the gear selected, and the M indicator next to the shift indicator comes on. The shift indicator also displays the gear selected in the D-paddle shift mode, but the M indicator does not come on.

**Transfer Assembly**
The transfer assembly consists of the transfer drive gear on the differential, the transfer output shaft in the transmission, the transfer drive gear (hypoid gear), the transfer shaft, the transfer output shaft (hypoid gear), and the companion flange. The transfer assembly is on the rear side of the transmission, beside the differential. The transfer drive gear on the differential drives the transfer output shaft in the transmission. The transfer output shaft in the transmission is connected to the transfer drive gear (hypoid gear) by splines. Power is transmitted from the transfer drive gear on the differential to the rear differential via the transfer assembly and the propeller shaft.

Protected by AR



## System Description (cont'd)

### Clutches and Gears

The 5-speed automatic transmission uses hydraulically-actuated clutches to engage or disengage the transmission gears. When hydraulic pressure is introduced into the clutch drum, the clutch piston moves. This presses the friction discs and steel plates together, locking them so they don't slip. Power is then transmitted through the engaged clutch pack to its hub-mounted gear. Likewise, when the hydraulic pressure is bled from the clutch pack, the piston releases the friction discs and the steel plates, and they are free to slide past each other. This allows the gear to spin independently on its shaft, transmitting no power.

**Transmission Cutaway View**

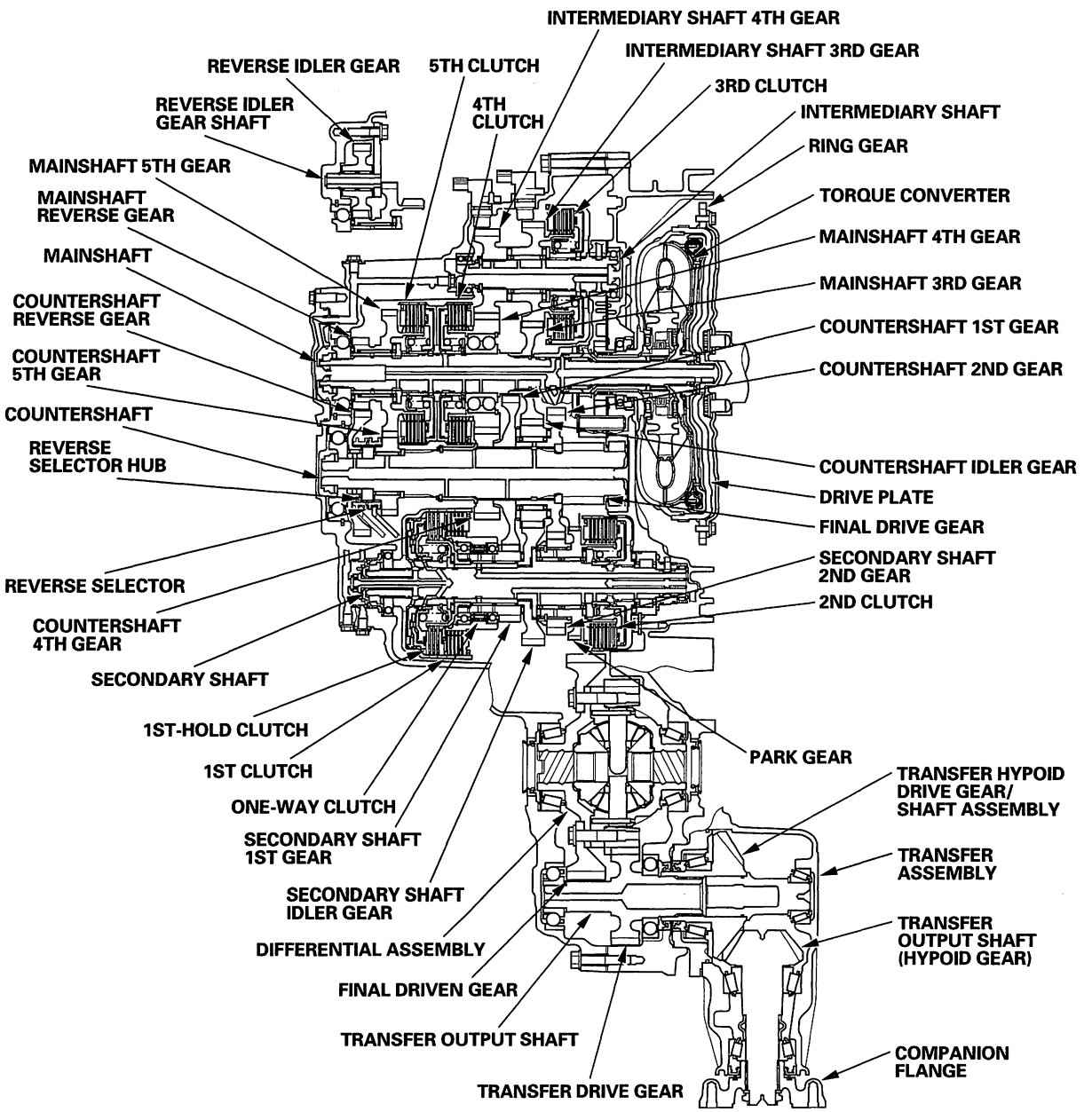




BACK

Protected by AR

**1st Clutch**
The 1st clutch engages/disengages 1st gear, and is located at the left end of the secondary shaft. The 1st clutch is supplied hydraulic pressure by its ATF feed pipe within the secondary shaft.

**1st-hold Clutch**
The 1st-hold clutch engages/disengages 1st-hold in 1st gear in the S position, and in the D-paddle shift mode. The 1st-hold clutch is located in the 1st clutch drum, and is supplied hydraulic pressure by its ATF feed pipe within the secondary shaft.

**2nd Clutch**
The 2nd clutch engages/disengages 2nd gear, and is located at the right end of the secondary shaft. The 2nd clutch is supplied hydraulic pressure through the secondary shaft by a circuit connected to the internal hydraulic circuit.

**3rd Clutch**
The 3rd clutch engages/disengages 3rd gear, and is located at the end of the intermediary shaft. The 3rd clutch is supplied hydraulic pressure through the intermediary shaft by a circuit connected to the internal hydraulic circuit.

**4th Clutch**
The 4th clutch engages/disengages 4th gear, and is located at the middle of the mainshaft. The 4th clutch is joined back-to-back to the 5th clutch. The 4th clutch is supplied hydraulic pressure through the mainshaft by a circuit connected to the internal hydraulic circuit.

**5th Clutch**
The 5th clutch engages/disengages 5th gear, as well as reverse gear, and is located at the middle of the mainshaft. The 5th clutch is joined back-to-back to the 4th clutch. The 5th clutch is supplied hydraulic pressure through the mainshaft by a circuit connected to the internal hydraulic circuit.

**One-way Clutch**
The one-way clutch is positioned between the 1st clutch hub and the secondary shaft 1st gear. The secondary shaft 1st gear is splined to the 1st-hold clutch hub, with the 1st-hold clutch hub splined to the secondary shaft. The secondary shaft 1st gear provides the outer race surface, and the 1st clutch hub provides the inner race surface. The one-way clutch locks when power is transmitted from the secondary shaft 1st gear to the countershaft 1st gear. The 1st clutch and gears remain engaged in the 1st, 2nd, 3rd, 4th, and 5th gear ranges in the D or S position.
However, the one-way clutch disengages when the 2nd, 3rd, 4th, or 5th clutches and gears are applied in the D or S position. This is because the increased rotational speed of the gears on the secondary shaft causes the one-way clutch to free-wheel with the 1st clutch still engaged.

(cont'd)

Protected by AR



## System Description (cont'd)

### Clutches and Gears (cont'd)

**Gear Operation**

Gears on the mainshaft:
- 4th gear is engages/disengaged with the mainshaft by the 4th clutch.
- 5th gear is engaged/disengages with the mainshaft by the 5th clutch.
- Reverse gear is engaged/disengaged with the mainshaft by the 5th clutch.
- 3rd gear is splined with the mainshaft and rotates with the mainshaft.

Gears on the countershaft:
- Final gear is integral with the countershaft.
- 1st gear, 2nd gear, and 4th gear are splined with the countershaft, and rotate with the countershaft.
- 5th gear and reverse gear rotate freely from the countershaft. The reverse selector engages 5th gear and reverse gear with the reverse selector hub. The reverse selector hub is splined to the countershaft so 5th gear and reverse gear engage with the countershaft.
- Idler gear is located over the 2nd gear, and rotates freely from the countershaft.

Gears on the secondary shaft:
- 1st gear is engaged with the secondary shaft by the 1st clutch and the one-way clutch when accelerating, and 1st gear is disengaged from the 1st clutch at the one-way clutch when decelerating. 1st gear is engaged with the secondary shaft by the 1st-hold clutch when decelerating for engine braking.
- 2nd gear is engaged/disengaged with the secondary shaft by the 2nd clutch.
- Idler gear is splined with the secondary shaft, and rotates with the secondary shaft.
- Park gear is integral with the 2nd gear.

Gears on the intermediary shaft:
- 3rd gear is engaged/disengaged with the intermediary shaft by the 3rd clutch.
- 4th gear is splined with the intermediary shaft.



BACK

Protected by AR

## Power Flow

**P Position**
Hydraulic pressure is not applied to the clutches. Power is not transmitted to the countershaft. The countershaft is locked by the park pawl interlocking the park gear.

**N Position**
Engine power transmitted from the mainshaft drives the mainshaft 3rd gear, the intermediary shaft 3rd gear, but hydraulic pressure is not applied to the clutches. Power is not transmitted to the countershaft. In this position, the position of the reverse selector differs according to whether the shift lever shifted from the D or R position:

- When shifted from the D position, the reverse selector engages with the countershaft 5th gear and the reverse selector hub, and the 5th gear engages with the countershaft.
- When shifted from the R position, the reverse selector engages with the countershaft reverse gear and the reverse selector hub, and the reverse gear engages with the countershaft.

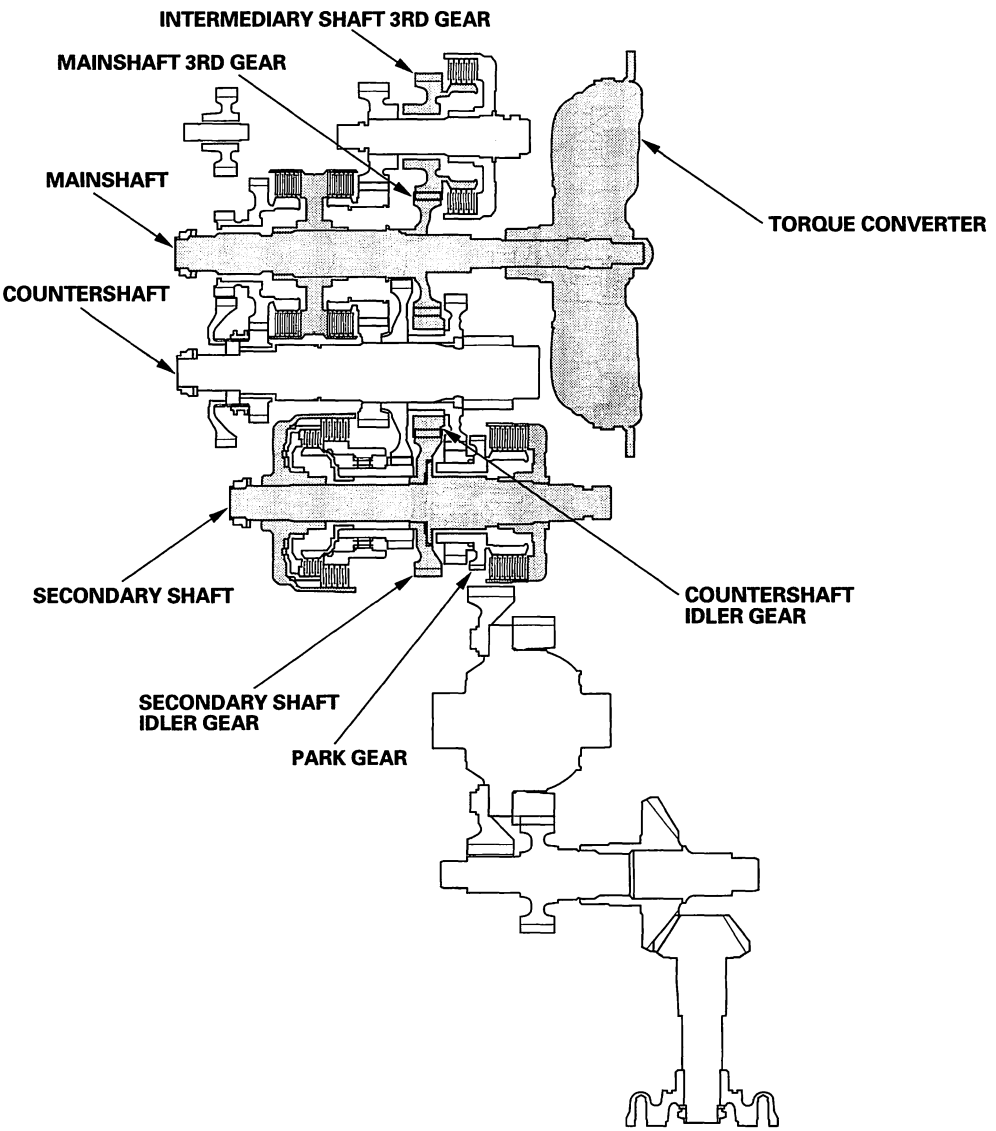


(cont'd)

Protected by AR



## System Description (cont'd)

### Power Flow (cont'd)

**D Position and S Position with Automatic Shift Mode**
In the D position, the optimum gear is automatically selected from the 1st, 2nd, 3rd, 4th, and 5th gears; and 1st, 2nd, 3rd and 4th gears in the S position with automatic shift mode according to conditions such as the balance between the accelerator pedal opening (engine loading) and vehicle speed.

**In 1st gear**
- Hydraulic pressure is applied to the 1st clutch, then the 1st clutch engages the secondary shaft 1st gear with the secondary shaft by the one-way clutch.
- The mainshaft 3rd gear drives the secondary shaft via the countershaft idler gear and secondary shaft idler gear.
- The secondary shaft 1st gear drives the countershaft 1st gear and the countershaft.
- Power is transmitted to the final drive gear, which in turn drives the final driven gear and the transfer drive gear.
- The transfer output shaft drives the transfer hypoid drive gear/shaft and the transfer output shaft (hypoid gear).

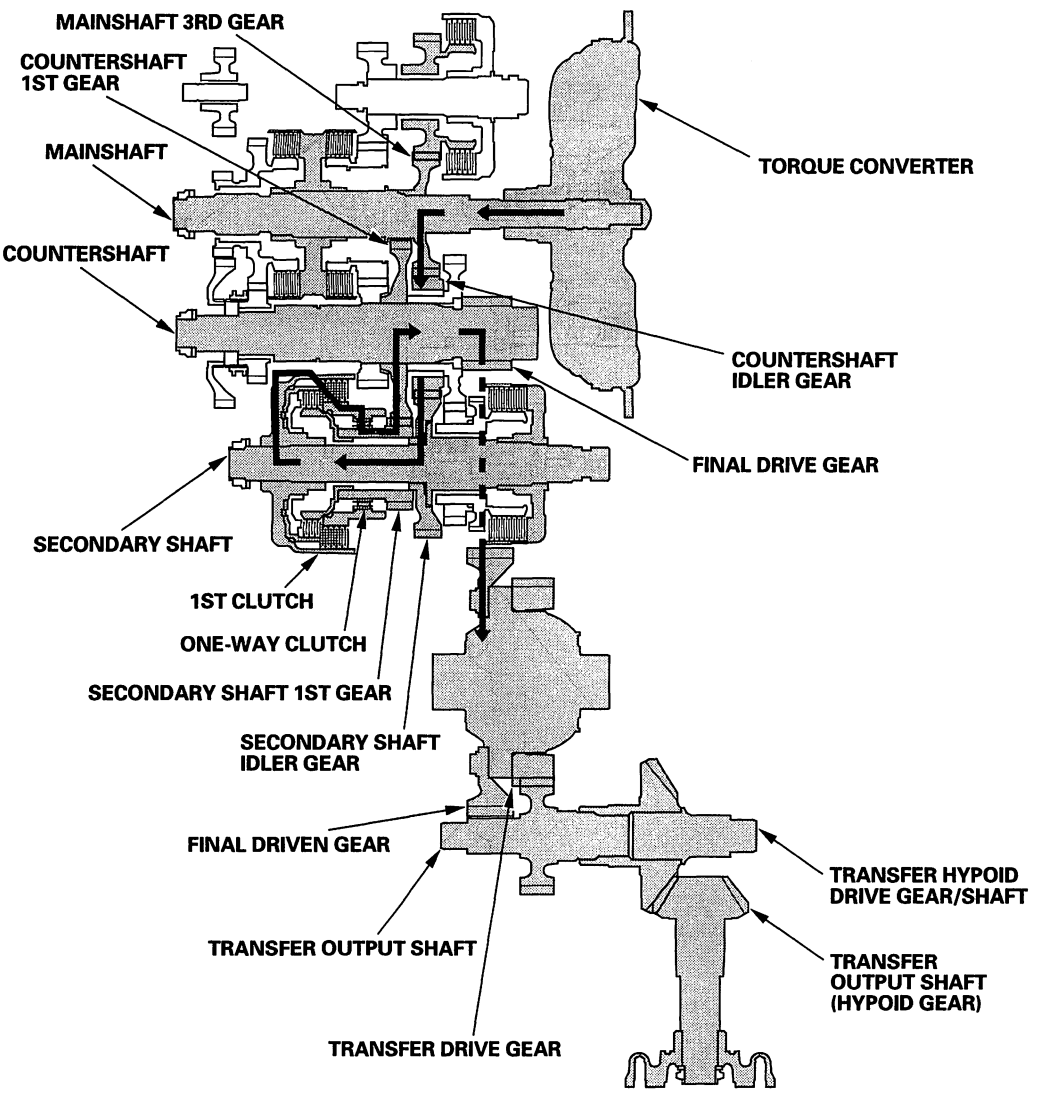




BACK

Protected by AR

**In 2nd gear**

- Hydraulic pressure is applied to the 2nd clutch, then the 2nd clutch engages the secondary shaft 2nd gear with the secondary shaft.
- The mainshaft 3rd gear drives the secondary shaft via the countershaft idler gear and secondary shaft idler gear.
- The secondary shaft 2nd gear drives the countershaft 2nd gear and the countershaft.
- Power is transmitted to the final drive gear, which in turn drives the final driven gear and the transfer drive gear.
- The transfer output shaft drives the transfer hypoid drive gear/shaft and the transfer output shaft (hypoid gear).
- Hydraulic pressure is also applied to the 1st clutch, but since the rotation speed of 2nd gear exceeds that of 1st gear, power from 1st gear is cut off at the one-way clutch.

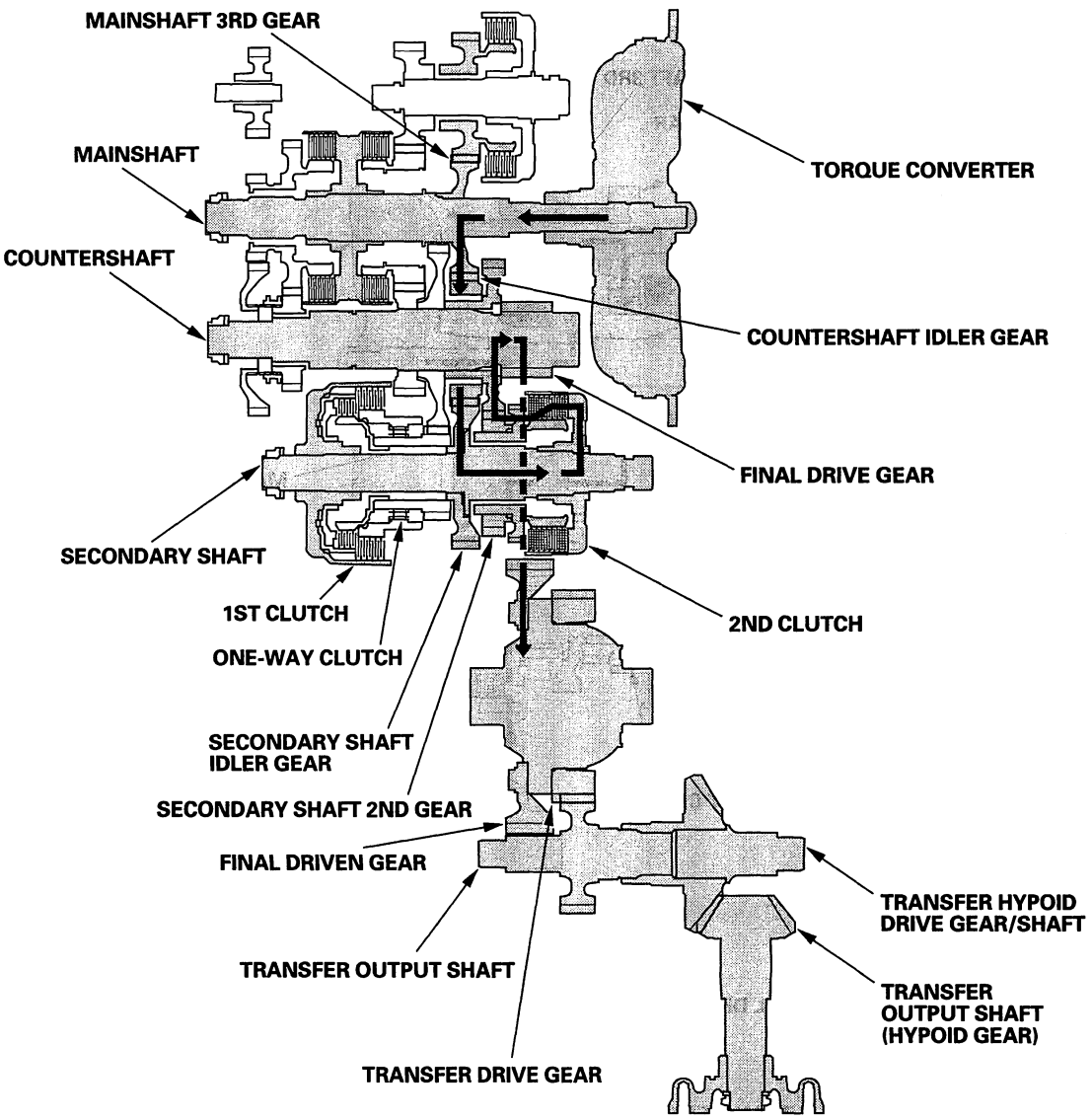


(cont'd)

Protected by AR



## System Description (cont'd)

### Power Flow (cont'd)

**In 3rd gear**

- Hydraulic pressure is applied to the 3rd clutch, then the 3rd clutch engages the intermediary shaft 3rd gear with the intermediary shaft.
- The mainshaft 3rd gear drives the intermediary shaft 4th gear via the intermediary shaft 3rd gear and the 3rd clutch.
- The intermediary shaft 4th gear drives the countershaft 4th gear and the countershaft via the mainshaft 4th gear.
- Power is transmitted to the final drive gear, which in turn drives the final driven gear and the transfer drive gear.
- The transfer output shaft drives the transfer hypoid drive gear/shaft and the transfer output shaft (hypoid gear).
- Hydraulic pressure is also applied to the 1st clutch, but since the rotation speed of 3rd gear exceeds that of 1st gear, power from 1st gear is cut off at the one-way clutch.

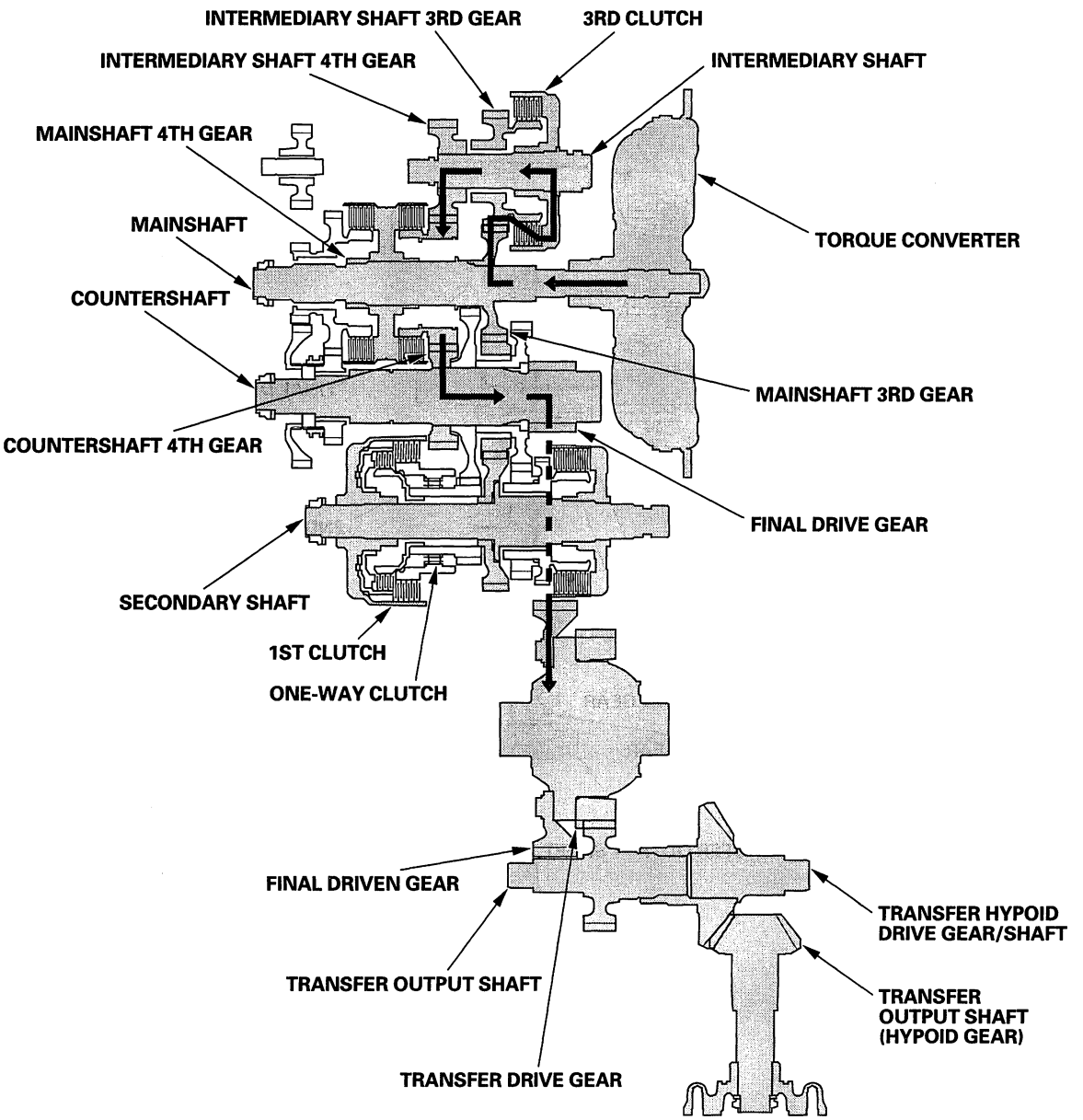




BACK

Protected by AR

**In 4th gear**

- Hydraulic pressure is applied to the 4th clutch, then the 4th clutch engages the mainshaft 4th gear with the mainshaft.
- The mainshaft 4th gear drives the countershaft 4th gear and the countershaft.
- Power is transmitted to the final drive gear, which in turn drives the final driven gear and the transfer drive gear.
- The transfer output shaft drives the transfer hypoid drive gear/shaft and the transfer output shaft (hypoid gear).
- Hydraulic pressure is also applied to the 1st clutch, but since the rotation speed of 4th gear exceeds that of 1st gear, power from 1st gear is cut off at the one-way clutch.

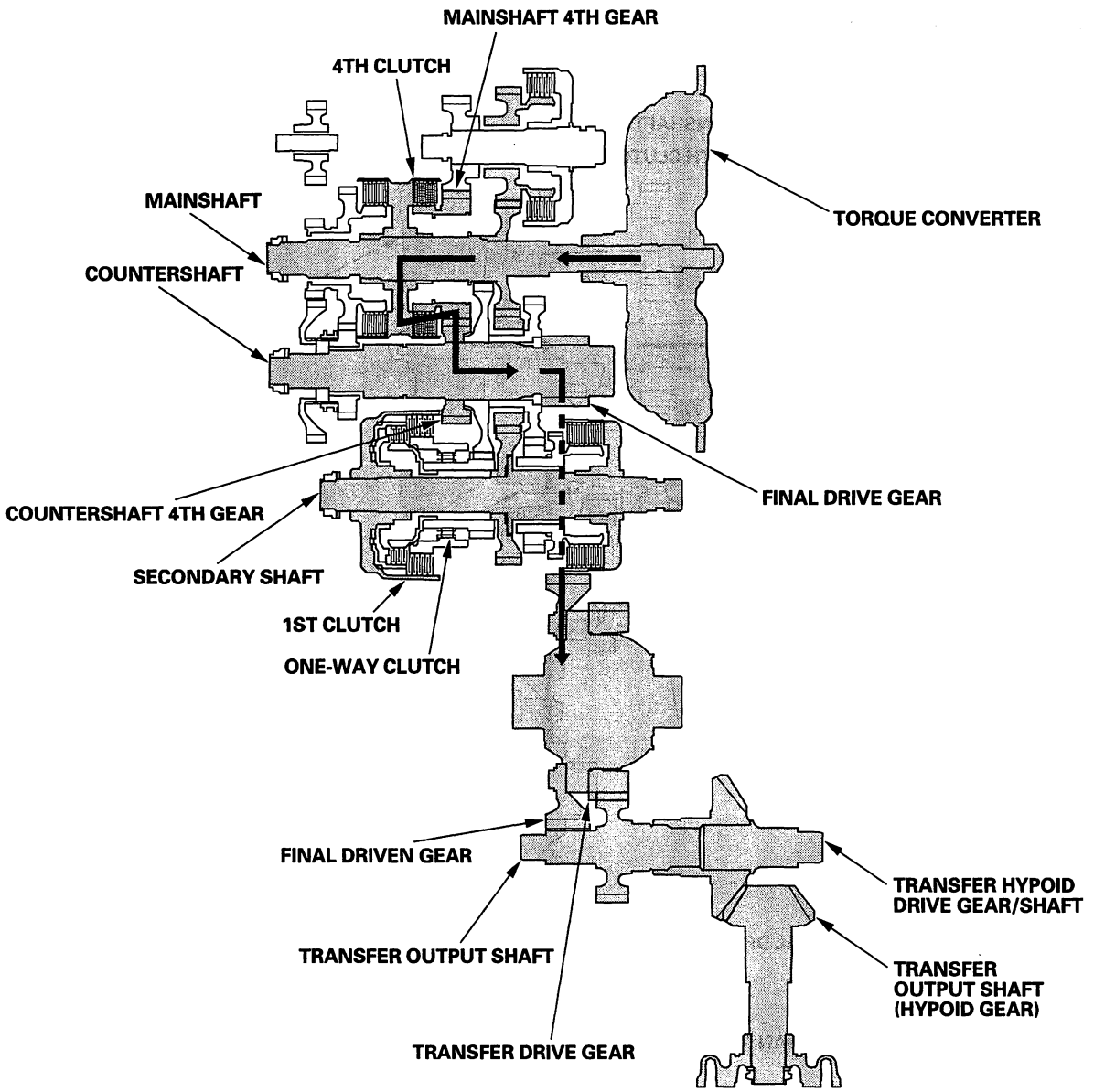


(cont'd)

Protected by AR



## System Description (cont'd)

### Power Flow (cont'd)

**In 5th gear**

- Hydraulic pressure is applied to the servo valve to engage the reverse selector with the countershaft 5th gear while the shift lever in the forward range (D and S positions).
- Hydraulic pressure is applied to the 5th clutch, then the 5th clutch engages the mainshaft 5th gear with the mainshaft.
- The mainshaft 5th gear drives the countershaft 5th gear, which drives the reverse selector hub and the countershaft.
- Power is transmitted to the final drive gear, which in turn drives the final driven gear and the transfer drive gear.
- The transfer output shaft drives the transfer hypoid drive gear/shaft and the transfer output shaft (hypoid gear).
- Hydraulic pressure is also applied to the 1st clutch, but since the rotation speed of 5th gear exceeds that of 1st gear, power from 1st gear is cut off at the one-way clutch.

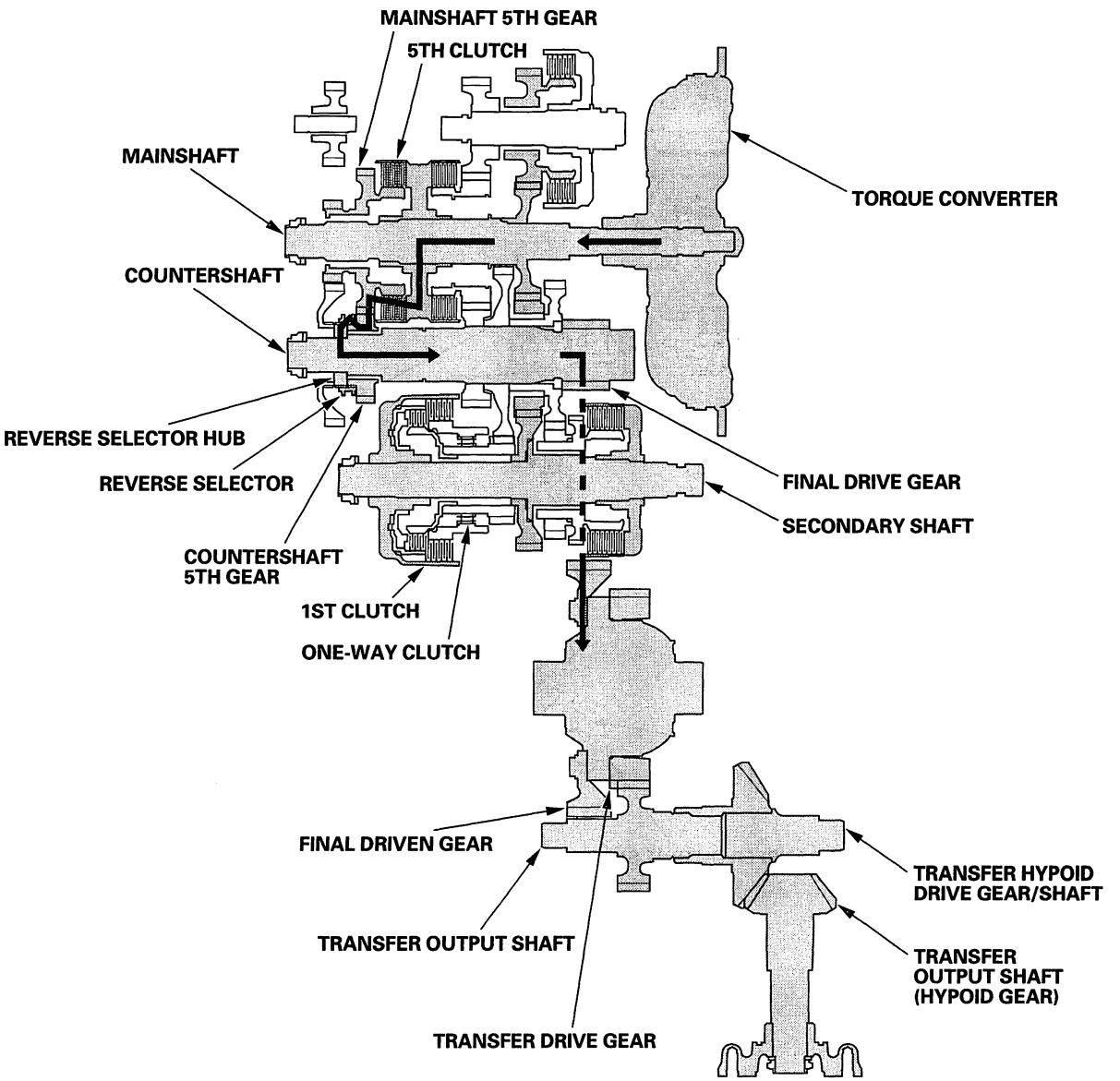




BACK

Protected by AR

**Acceleration in 1st gear in S position with sequential sportshift mode, and in D position with D-paddle shift mode**
In the S position with sequential sportshift mode, and in the D position with D-paddle shift mode under an acceleration, hydraulic pressure is applied to the 1st clutch and the 1st-hold clutch. The power flow when accelerating is as follows:

- Hydraulic pressure is applied to the 1st clutch, then the 1st clutch engages the secondary shaft 1st gear with the secondary shaft by the one-way clutch.
- The mainshaft 3rd gear drives the secondary shaft via the countershaft idler gear and secondary shaft idler gear.
- The secondary shaft 1st gear drives the countershaft 1st gear and the countershaft.
- Hydraulic pressure is also applied to the 1st-hold clutch, and the 1st-hold clutch engages the secondary shaft 1st gear with the secondary shaft.
- Power is transmitted to the final drive gear, which in turn drives the final driven gear and the transfer drive gear.
- The transfer output shaft drives the transfer hypoid drive gear/shaft and the transfer output shaft (hypoid gear).

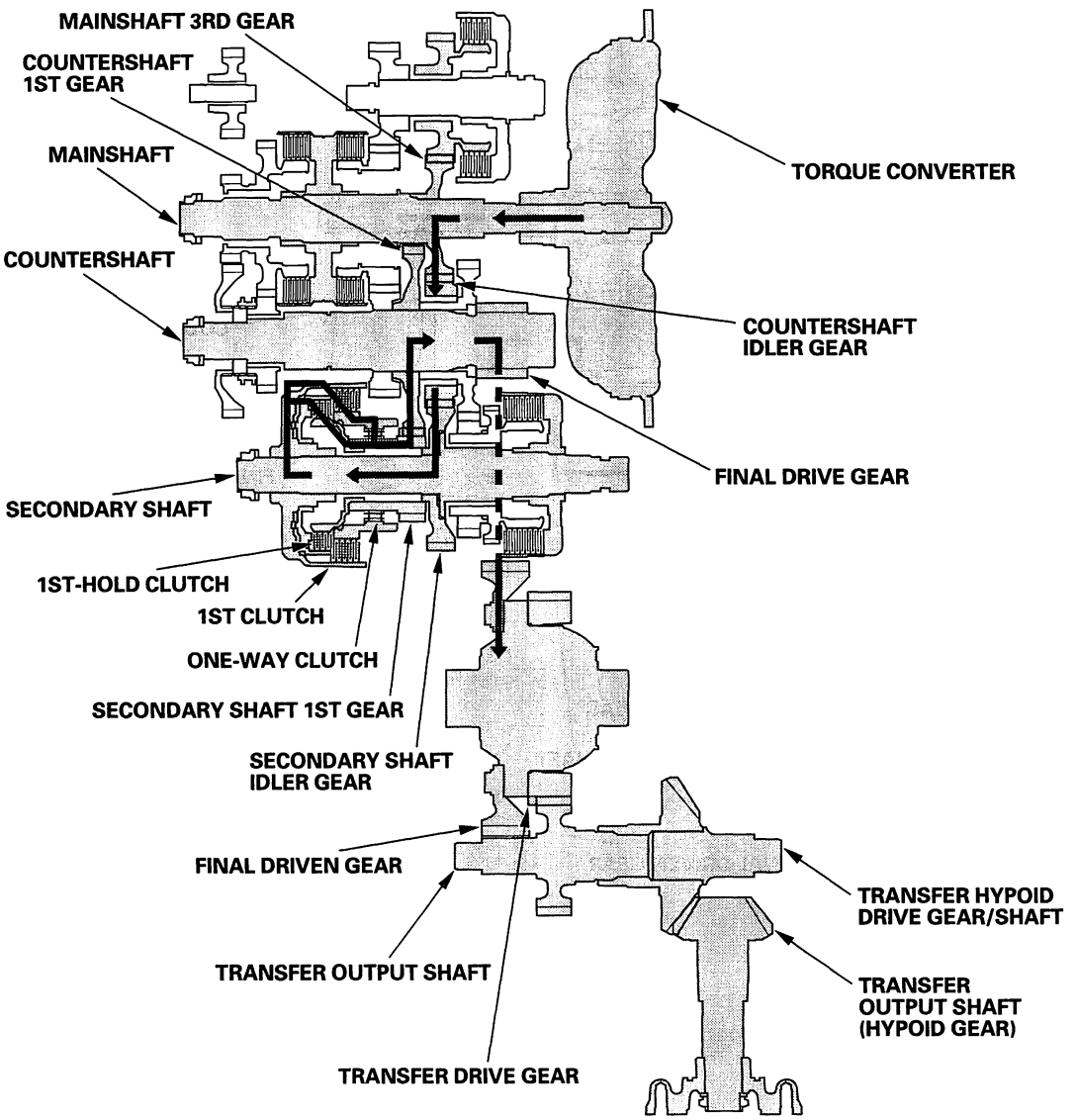


(cont'd)

Protected by AR



## System Description (cont'd)

### Power Flow (cont'd)

**Deceleration in 1st gear in S Position with sequential sportshift mode, and in D position with D-paddle shift mode**
The power flow in 1st gear in the S position with sequential sportshift mode, and in the D position with D-paddle shift mode when decelerating is as follows:

- Hydraulic pressure is applied to the 1st clutch and the 1st-hold clutch.
- Rolling resistance from the road surface goes through the front wheels to the final driven gear, then to the countershaft idler gear.
- The one-way clutch disengages because the application of torque is reversed.
- The force conveyed to the secondary shaft idler gear turns the mainshaft 3rd gear via the countershaft idler gear. As a result, engine braking can be obtained with 1st gear.

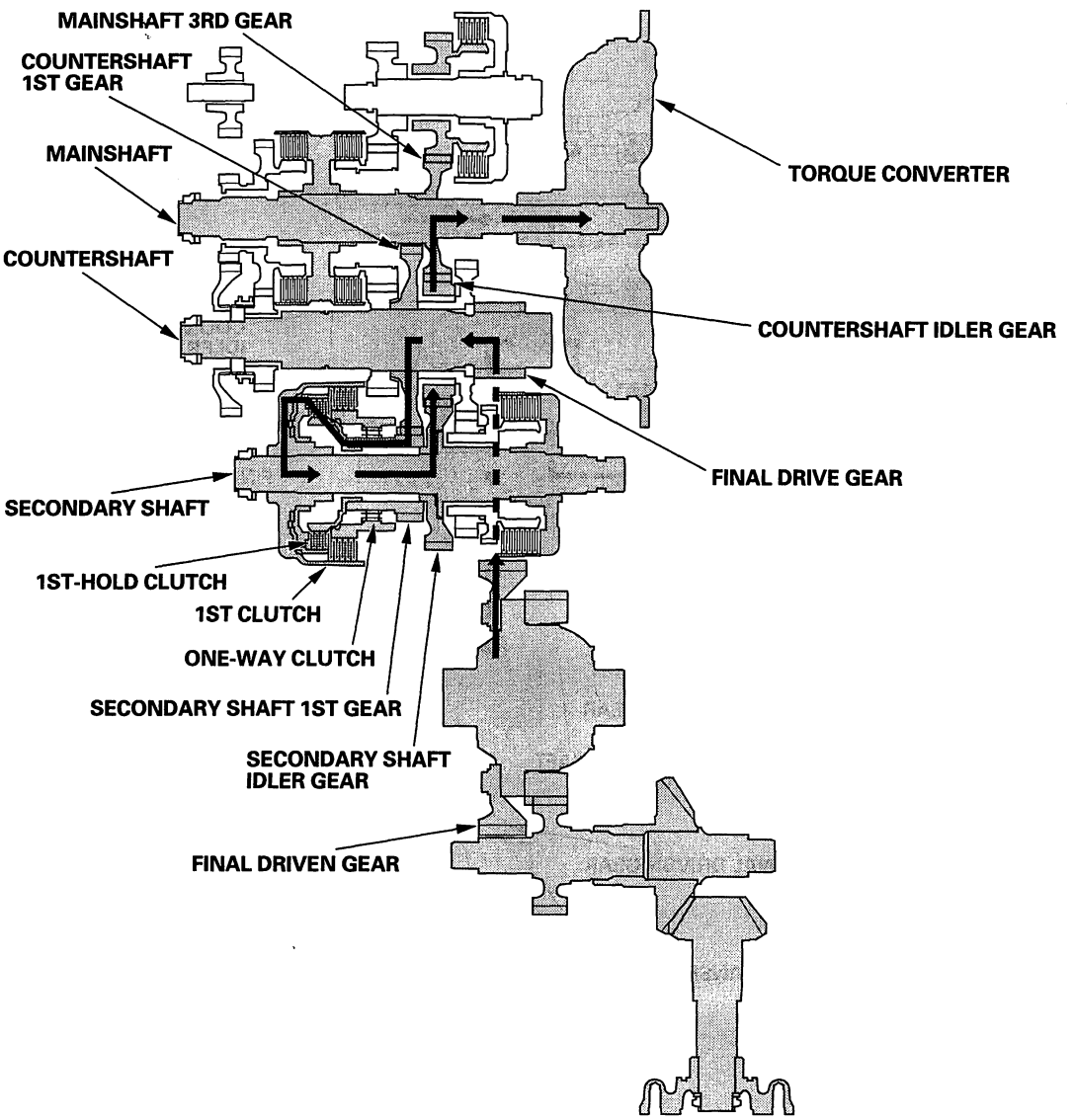




BACK

Protected by AR

**R Position**

- Hydraulic pressure is applied to the servo valve to engage the reverse selector with the countershaft reverse gear while the shift lever is in the R position.
- Hydraulic pressure is applied to the 5th clutch, then the 5th clutch engages the mainshaft reverse gear with the mainshaft.
- The mainshaft reverse gear drives the countershaft reverse gear via the reverse idler gear.
- The countershaft reverse gear drives the countershaft via the reverse selector which drives the reverse selector hub.
- The rotation direction of the countershaft is changed by the reverse idler gear.
- Power is transmitted to the final drive gear, which in turn drives the final driven gear and the transfer drive gear.
- The transfer output shaft drives the transfer hypoid drive gear/shaft and the transfer output shaft (hypoid gear).

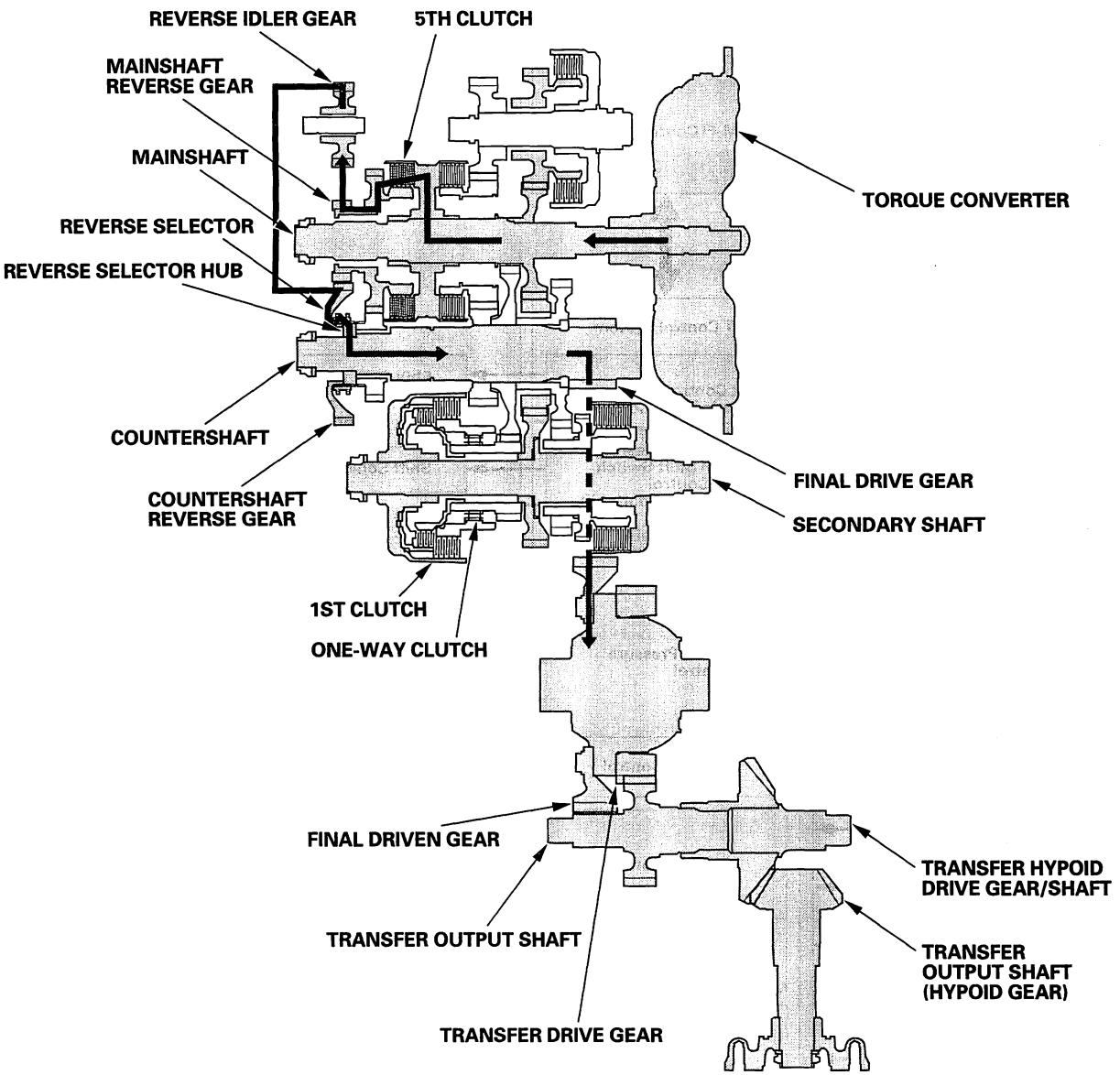

Protected by AR



## System Description (cont'd)

### Electronic Control System

**Electronic Control**
The electronic control system consists of the powertrain control module (PCM), sensors, and seven solenoid valves. Shifting and lock-up are electronically controlled for comfortable driving under all conditions.

**Functional Diagram**
The PCM receives input signals from the sensors, switches, and other control units, processes data, and outputs signals for the engine control system and A/T control system. The A/T control system includes shift control, clutch pressure control, and lock-up control. The PCM switches the shift solenoid valves and the A/T clutch pressure control solenoid valves to control shifting transmission gears and lock-up torque converter clutch.

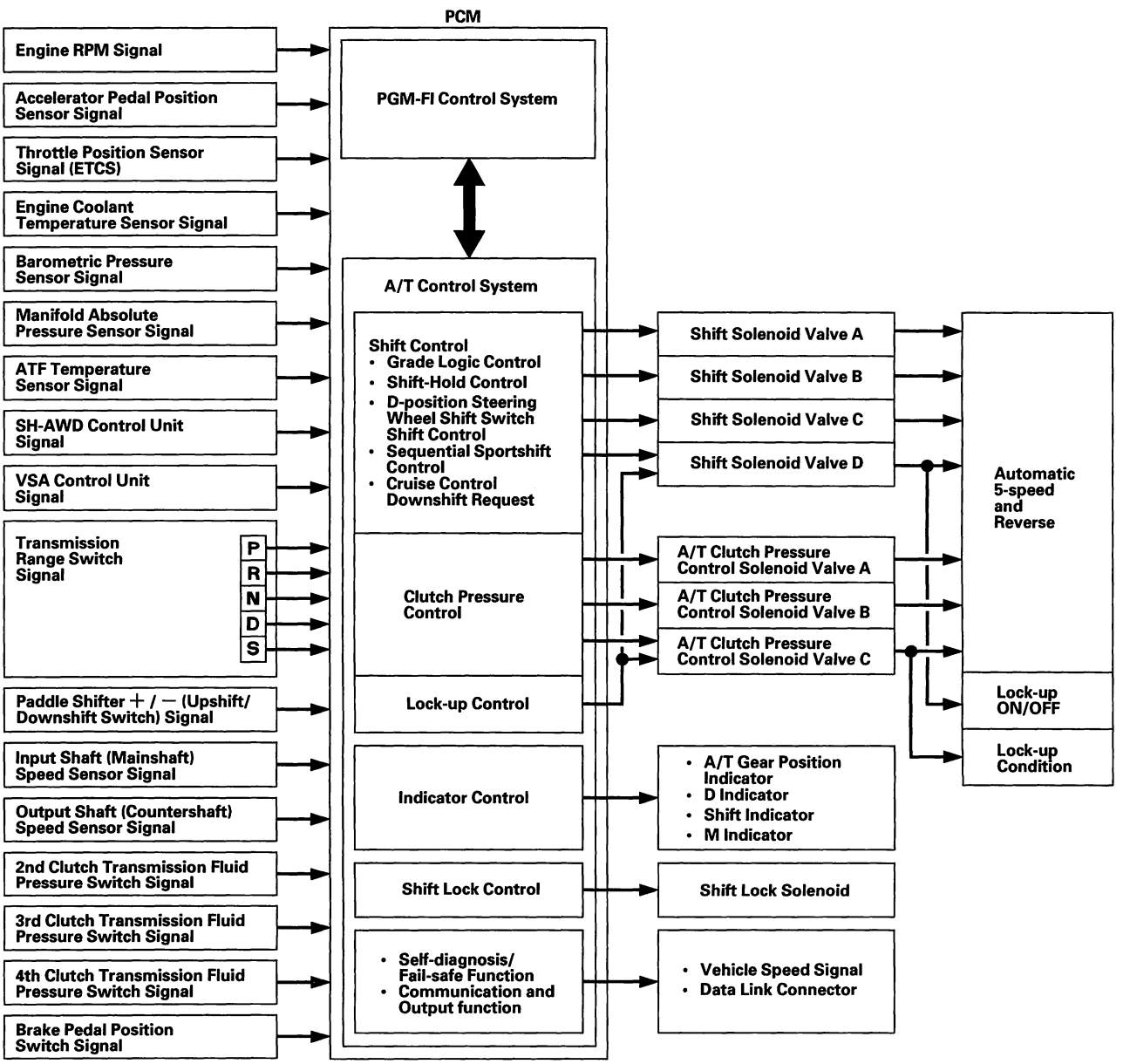




BACK

Protected by AR

**Electronic Control System Component Locations**

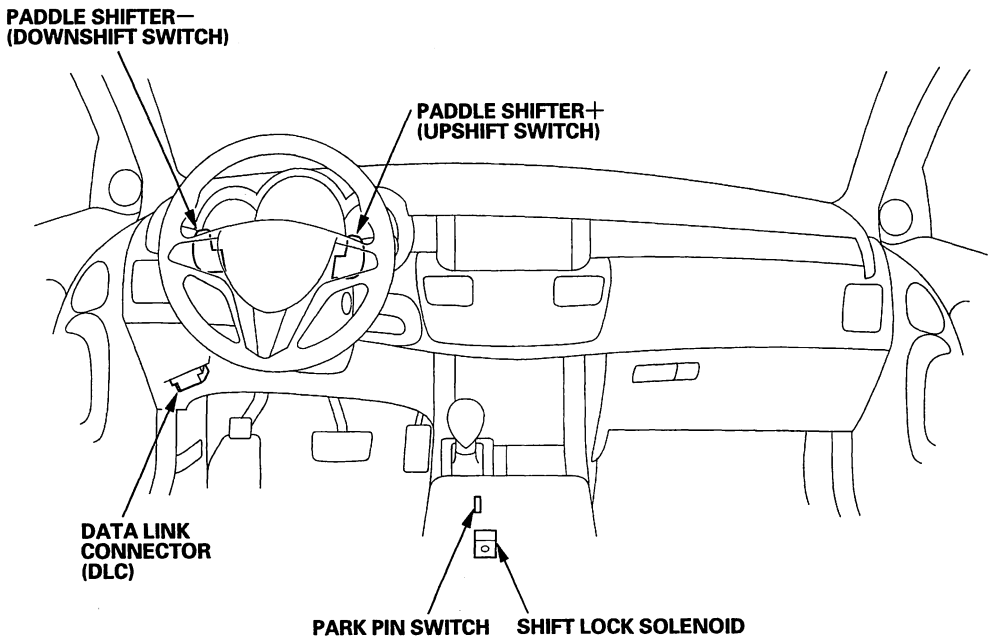


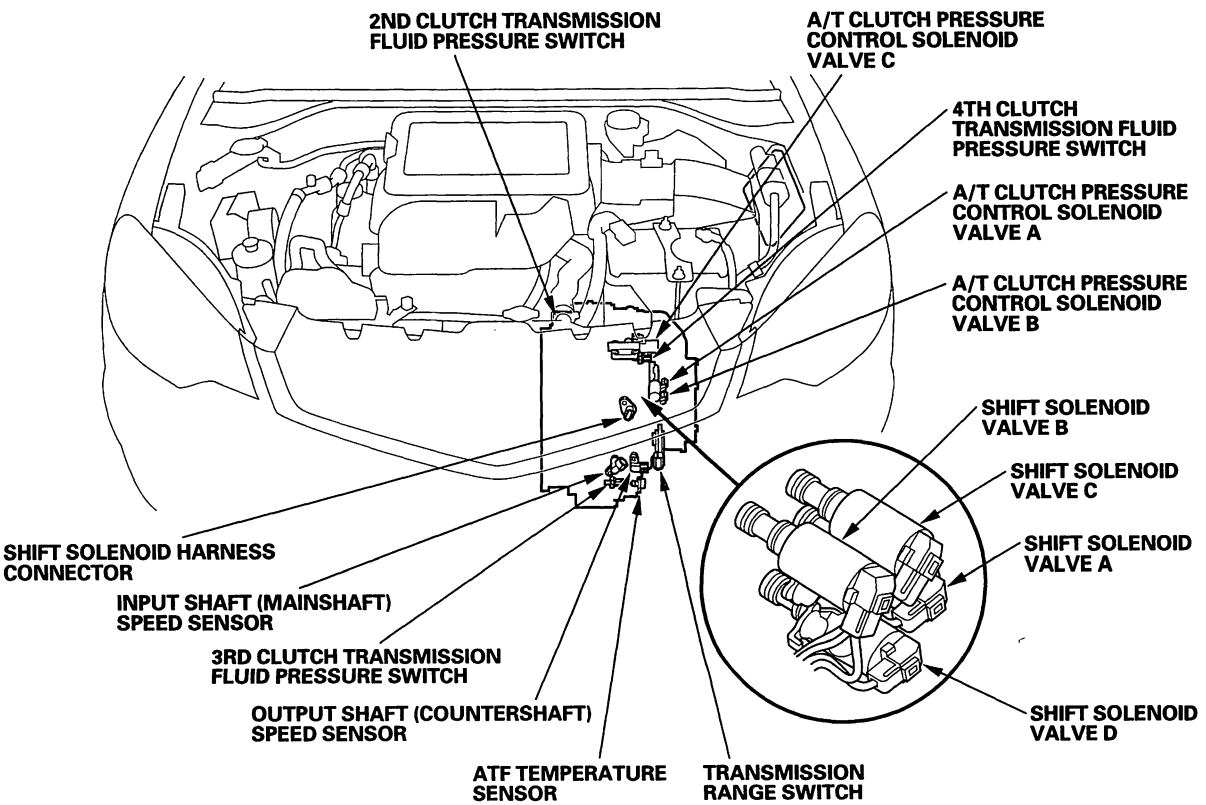


(cont'd)

BACK

Protected by AR



## System Description (cont'd)

### Electronic Control System (cont'd)

**Shift Control**
The PCM instantly determines which gear should be selected by various signals sent from sensors and switches, and it actuates the shift solenoid valves A, B, C, and D to control shifting transmission gear.

There are two types of shift solenoid valves:
- Shift solenoid valves A and D use the ON-OPEN/OFF-CLOSE type; the shift solenoid valve opens the port of shift solenoid valve pressure while the shift solenoid valve is turned ON by the PCM, and closes the port when shift solenoid valve is OFF.
- Shift solenoid valves B and C use the ON-CLOSE/OFF-OPEN type; the shift solenoid valve closes the port of shift solenoid valve pressure while the shift solenoid valve is turned ON by the PCM, and opens the port when shift solenoid valve is OFF.

The combination of driving signals to shift solenoid valves A, B, C, and D are shown in the table.

| Position | Gear position | Shift solenoid valves | | | |
|---|---|---|---|---|---|
| | | A | B | C | D |
| D and S | Shifting from the N position | OFF | ON | OFF | OFF |
| | Stays in 1st | OFF | ON | ON | OFF |
| | Shifting gears between 1st and 2nd | ON | ON | ON | OFF or ON |
| | Stays in 2nd | ON | ON | OFF | OFF or ON |
| | Shifting gears between 2nd and 3rd | ON | ON | ON | OFF or ON |
| | Stays in 3rd | ON | OFF | ON | OFF or ON |
| | Shifting gears between 3rd and 4th | ON | OFF | OFF | OFF or ON |
| | Stays in 4th | OFF | OFF | OFF | OFF or ON |
| D | Shifting gears between 4th and 5th | OFF | OFF | ON | OFF or ON |
| | Stays in 5th | OFF | ON | ON | OFF or ON |
| S with sequential sportshift mode | 1st | OFF | ON | ON | OFF or ON |
| | 2nd | ON | ON | OFF | OFF or ON |
| | 3rd | ON | OFF | ON | OFF or ON |
| | 4th | OFF | OFF | OFF | OFF or ON |
| | 5th | OFF | ON | ON | OFF or ON |
| N | Neutral | OFF | ON | OFF | OFF |
| R | Shifting from the P and N positions | OFF | ON | OFF | ON |
| | Stays in reverse | ON | ON | OFF | ON |
| | Reverse inhibit control | OFF | ON | OFF | OFF |
| P | Park | OFF | ON | OFF | ON |



BACK

Protected by AR

**Shift Control - Grade Logic Control**

A grade logic control system has been adopted to control shifting in the D position. The PCM compares actual driving conditions with programmed driving conditions, based on the input from the throttle position sensor, the engine coolant temperature sensor, the barometric pressure sensor, the brake pedal position switch signal, and the shift lever position signal, to control shifting while the vehicle is ascending or descending a slope.

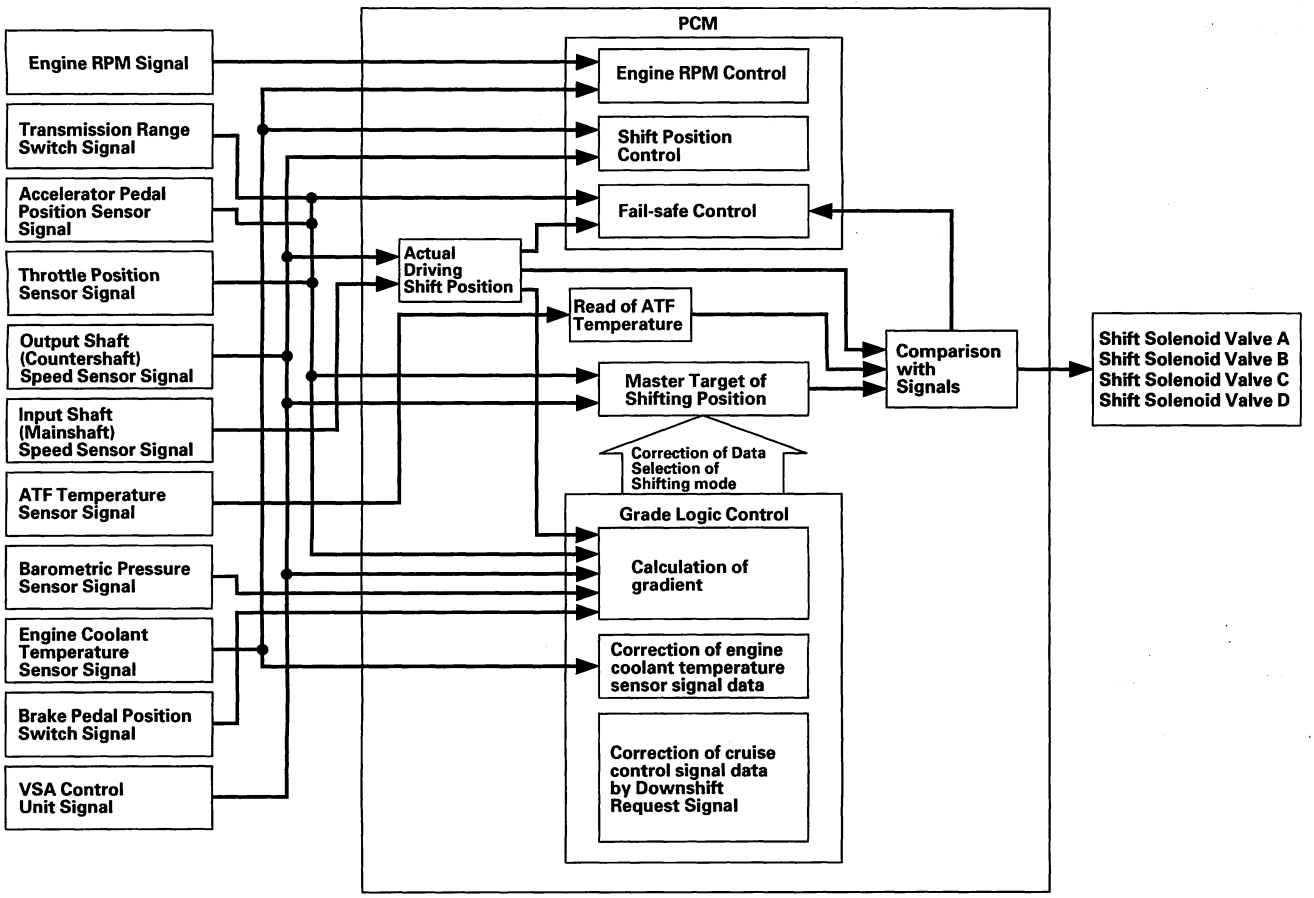


(cont'd)

Protected by AR



## System Description (cont'd)

### Electronic Control System (cont'd)

**Ascending Control**
When the PCM determines that the vehicle is climbing a hill in the D position, the system extends the engagement area of 2nd gear, 3rd gear, and 4th gear to prevent the transmission from frequently shifting between 2nd and 3rd gears, between 3rd and 4th gears, and between 4th and 5th gears, so the vehicle can run smooth and have more power when needed.

NOTE: Shift commands stored in the PCM between 2nd and 3rd gears, between 3rd and 4th gears, and between 4th and 5th gears, enable the PCM to automatically select the most suitable gear according to the magnitude of a gradient.

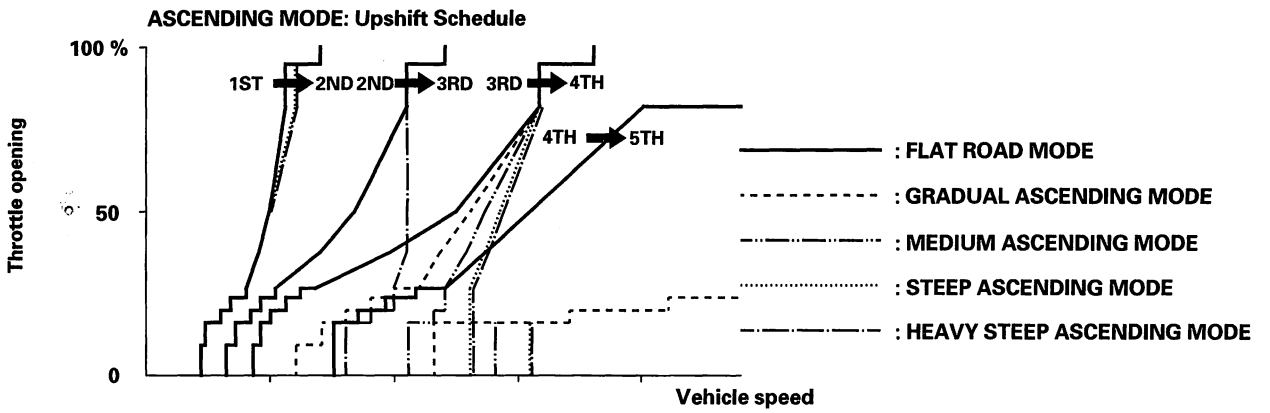


**Descending Control**
When the PCM determines that the vehicle is going down a hill in the D position, the shift-up speed from 4th to 5th gear, 3rd to 4th gear, and from 2nd to 3rd (when the throttle is closed) becomes faster than the set speed for flat road driving to widen the 4th gear, 3rd gear, and 2nd gear driving areas. This, in combination with engine braking from the deceleration lock-up, achieves smooth driving when the vehicle is descending. There are three descending modes with different 4th gear driving areas, 3rd gear driving areas and, 2nd gear driving areas according to the magnitude of a gradient stored in the PCM. When the vehicle is in 5th or 4th gear and you are decelerating while applying the brakes on a steep hill, the transmission will downshift to a lower gear. When you accelerate, the transmission will then return to a higher gear.

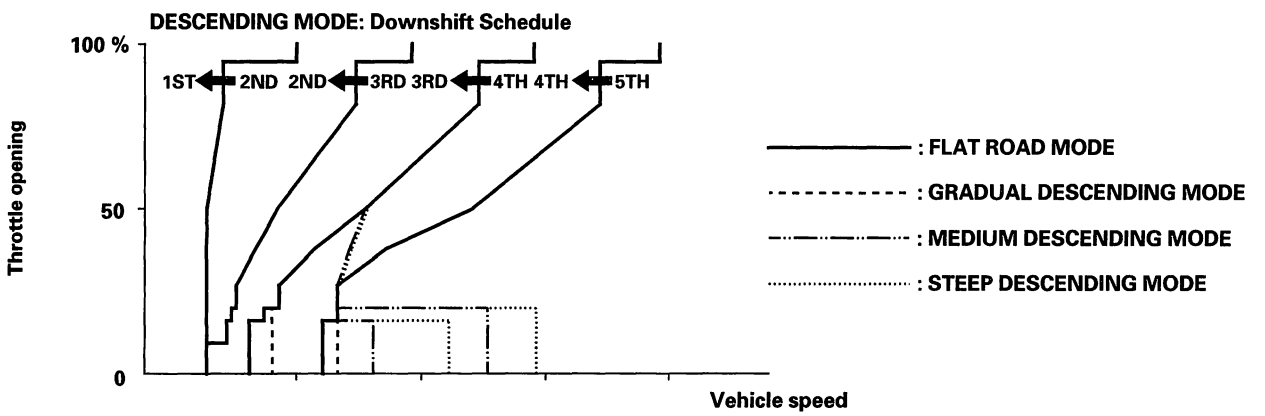




BACK

Protected by AR

**Deceleration Control**
When the vehicle goes around a corner and needs to decelerate first and then accelerate, the PCM sets the data for deceleration control to reduce the number of times the transmission shifts. When the vehicle is decelerating from speeds above 25 mph (40 km/h), the PCM shifts the transmission from 4th to 3rd earlier than normal to cope with upcoming acceleration.

**Shift-Hold Control**
When negotiating winding roads, the throttle is suddenly released and the brakes are applied, as is the case when decelerating at the entrance of a corner, Shift-Hold Control keeps the transmission in its current (lower) ratio as it negotiates the corner and accelerates out.
When the vehicle is driven aggressively on a winding road, the PCM will extend the engagement time of 3rd gear and 4th gear to prevent the transmission from frequently shifting between 3rd, 4th, and 5th gears. This allows the driver to have more control for both acceleration and deceleration.
The PCM monitors the average change in vehicle speed and throttle over time. When these values exceed those for normal driving conditions, the shift-up from 3rd to 4th gear and 4th to 5th gear is delayed. This gives more control over power, and engine braking when the driver is driving aggressively around winding roads. The transmission will resume the normal shift-up pattern after the PCM determines that normal driving has resumed.

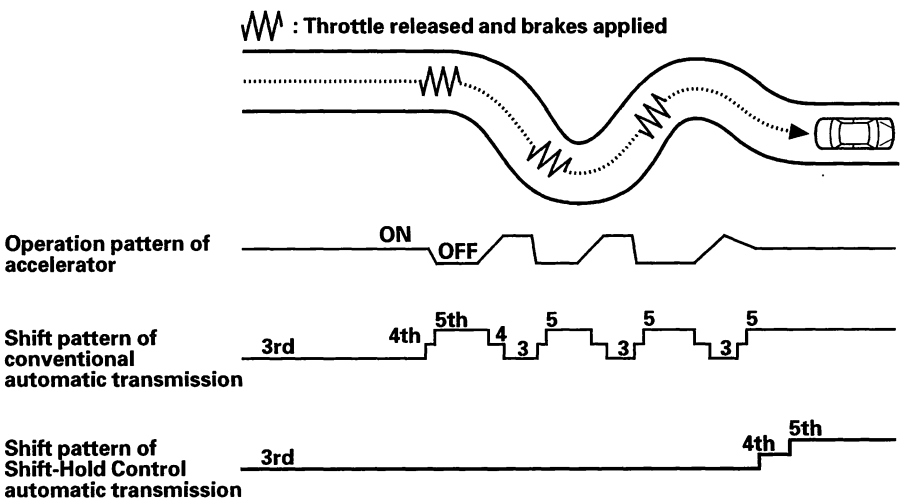


(cont'd)

Protected by AR



## System Description (cont'd)

### Electronic Control System (cont'd)

**Shift Control - Manual Shift Mode**
The RDX transmission is provided with a D-paddle shift mode in the D position, and with a sequential sportshift mode in the S position. Both modes are entered by pulling the paddle shifter + (upshift switch) or paddle shifter — (downshift switch) while driving.

**D-Paddle Shift Mode**
When the transmission is switched into the D-paddle shift mode by pulling the paddle shifters while driving in the D position, the transmission can shift into a lower gear by pulling the paddle shifter — (downshift switch), and it can shift into a higher gear by pulling the paddle shifter + (upshift switch). When the transmission shifts into a lower gear or a higher gear by pulling the paddle shifters, the shift indicator in the gauge control module displays the number of currently-selected gear. This number of the gear goes off when the transmission downshifts automatically, or when the transmission upshifts automatically while coasting.
The transmission stays in 5th gear if the paddle shifter + (upshift switch) is pulled when driving in 5th gear, and the shift indicator displays "5" in 2 seconds, then goes off. The transmission stays in 1st gear if the paddle shifter — (downshift switch) is pulled when driving in 1st gear, and the shift indicator displays "1" in 2 seconds, then goes off. The transmission stays in the current gear and does not upshift to the next higher gear if the paddle shifter + (upshift switch) is pulled while driving below the minimum allowable speed for, and the shift indicator blinks the number of the next higher gear several times, then returns to the number of the current gear.

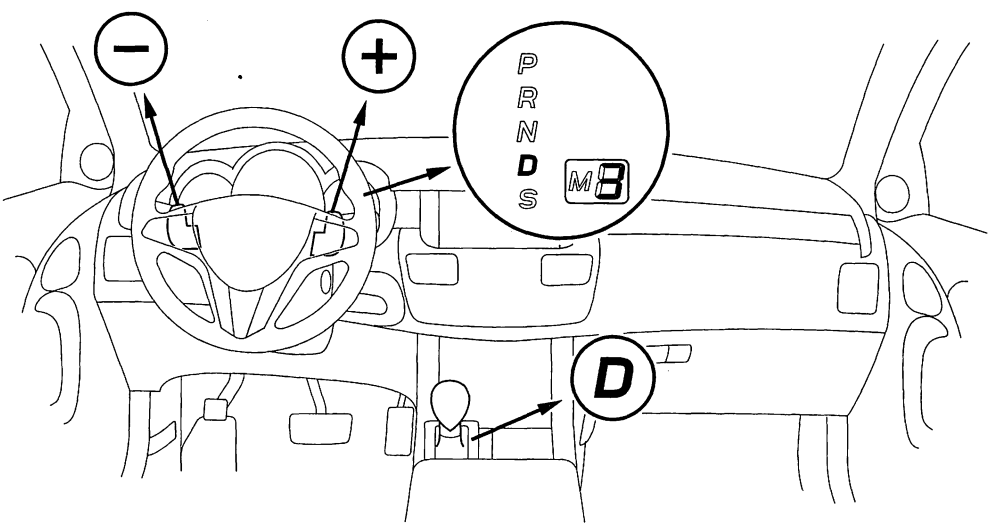




BACK

Protected by AR

**S Position Automatic Shift Mode and Sequential Sportshift Mode**

The S position has two shifting modes; the automatic shift mode and the sequential sportshift mode. In the S position automatic shift mode, the transmission upshifts and downshifts automatically from 1st through 4th gear, and the paddle shifters are ready to be activated to switch to the sequential sportshift mode. In the automatic shift mode, the shift indicator and the M indicator in the gauge control module do not come on.

When the paddle shifter + (upshift switch) or paddle shifter — (downshift switch) is pulled, the automatic shift mode is canceled and the sequential sportshift mode comes into operation. The shift indicator displays the number of the selected gear, and the M indicator comes on. In the sequential sportshift mode, the driver can shift up and down manually from 1st through 5th gear by using the paddle shifters, much like a manual transmission. The paddle shifters are installed on the back of the steering wheel, and the driver can shift gears by pulling the paddle shifters without taking either hand off the steering wheel.

In the sequential sportshift mode, the transmission must be shifted up and down by pulling the paddle shifters. However, the transmission cannot downshift and stays in the current gear if the paddle shifter — (downshift switch) is pulled while the vehicle is coasting at a speed that would cause the engine to over-rev by downshifting the transmission, and the shift indicator blinks the number of the selected gear several times, then returns to the number of the current gear. If the vehicle speed reaches an appropriate speed while the shift indicator is blinking the number of the selected gear, the transmission downshifts and the shift indicator displays the selected gear. The transmission also cannot upshift and stays in the current gear if the paddle shifter + (upshift switch) is pulled while driving below an appropriate upshifting speed, the shift indicator blinks the number of the selected gear several times, then returns to the number of the current gear. If the vehicle speed reaches an appropriate upshift speed while the shift indicator is blinking the number of the selected gear, the transmission upshifts and the shift indicator displays the selected gear.

This mode has automatic downshifting areas so the vehicle can run smoothly with more power to cope with upcoming acceleration. When coasting in 5th gear or 4th gear, the transmission downshifts to the next lower gear if the vehicle slows down to the programmed speed, or by pressing the brake pedal.

When the transmission decelerates to a stop, the transmission shifts to 1st gear automatically. The transmission can be shifted to 2nd gear by pulling the paddle shifter + (upshift switch) while the vehicle is stopped, and the vehicle can start off in 2nd gear.

The sequential sportshift mode is canceled when moving the shift lever to any position other than S.

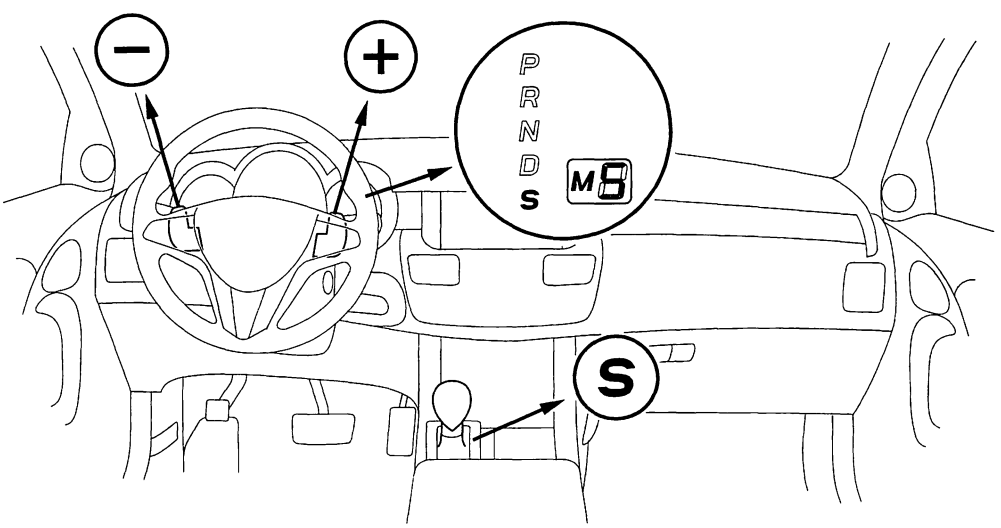


(cont'd)

Protected by AR



## System Description (cont'd)

### Electronic Control System (cont'd)

**Clutch Pressure Control**

The PCM actuates A/T clutch pressure control solenoid valves A, B, and C to control the clutch pressure. When shifting between gears, the clutch pressure regulated by A/T clutch pressure control solenoid valves A, B, and C engages and disengages the clutch smoothly.

The PCM receives input signals from the various sensors and switches, performs processing data, and outputs current to A/T clutch pressure control solenoid valves A, B, and C.

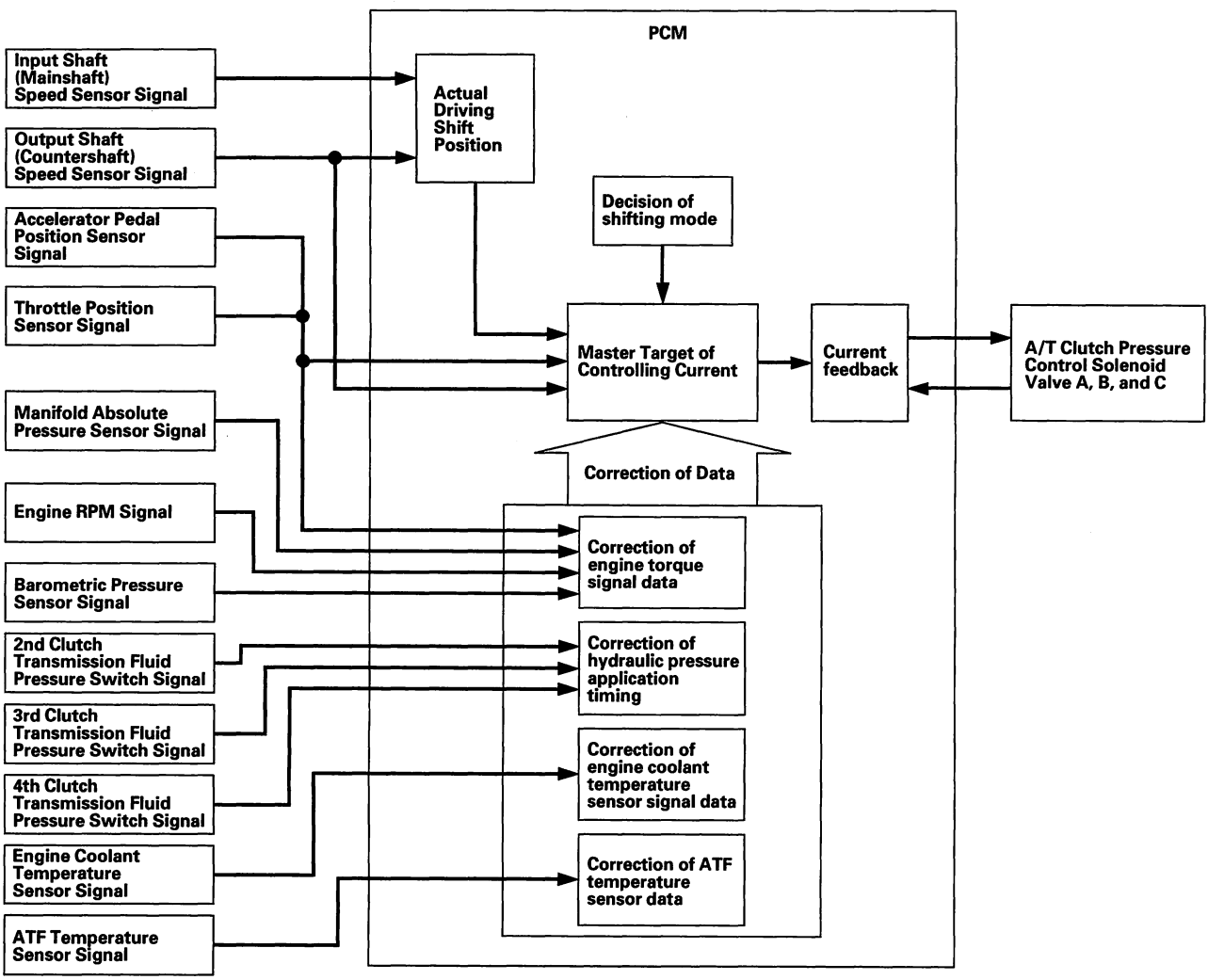




BACK

Protected by AR

**Lock-up Control**

The shift solenoid valve D controls the hydraulic pressure to switch the lock-up shift valve and lock-up ON and OFF. The PCM actuates the shift solenoid valve D and the A/T clutch pressure control solenoid valve C ON, the condition of lock-up starts. The A/T clutch pressure control solenoid valve C regulates and apply the hydraulic pressure to the lock-up control valve to control the volume of the lock-up.

The lock-up mechanism operates in 2nd, 3rd, 4th, and 5th gears in the D position, and 2nd, 3rd, and 4th gears in the S position.

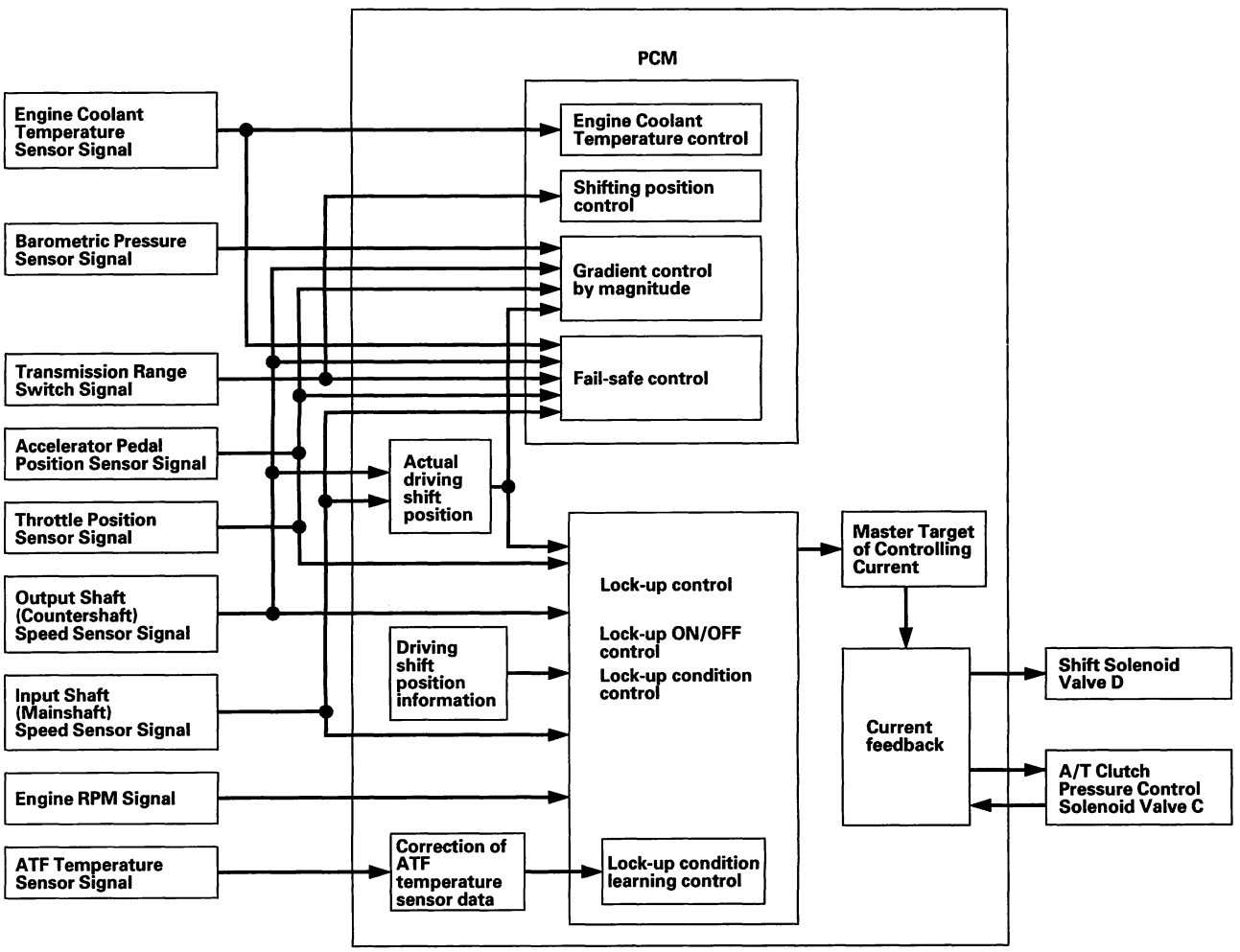


(cont'd)

Protected by AR



## System Description (cont'd)

### Electronic Control System (cont'd)

#### PCM A/T Control System Electrical Connections

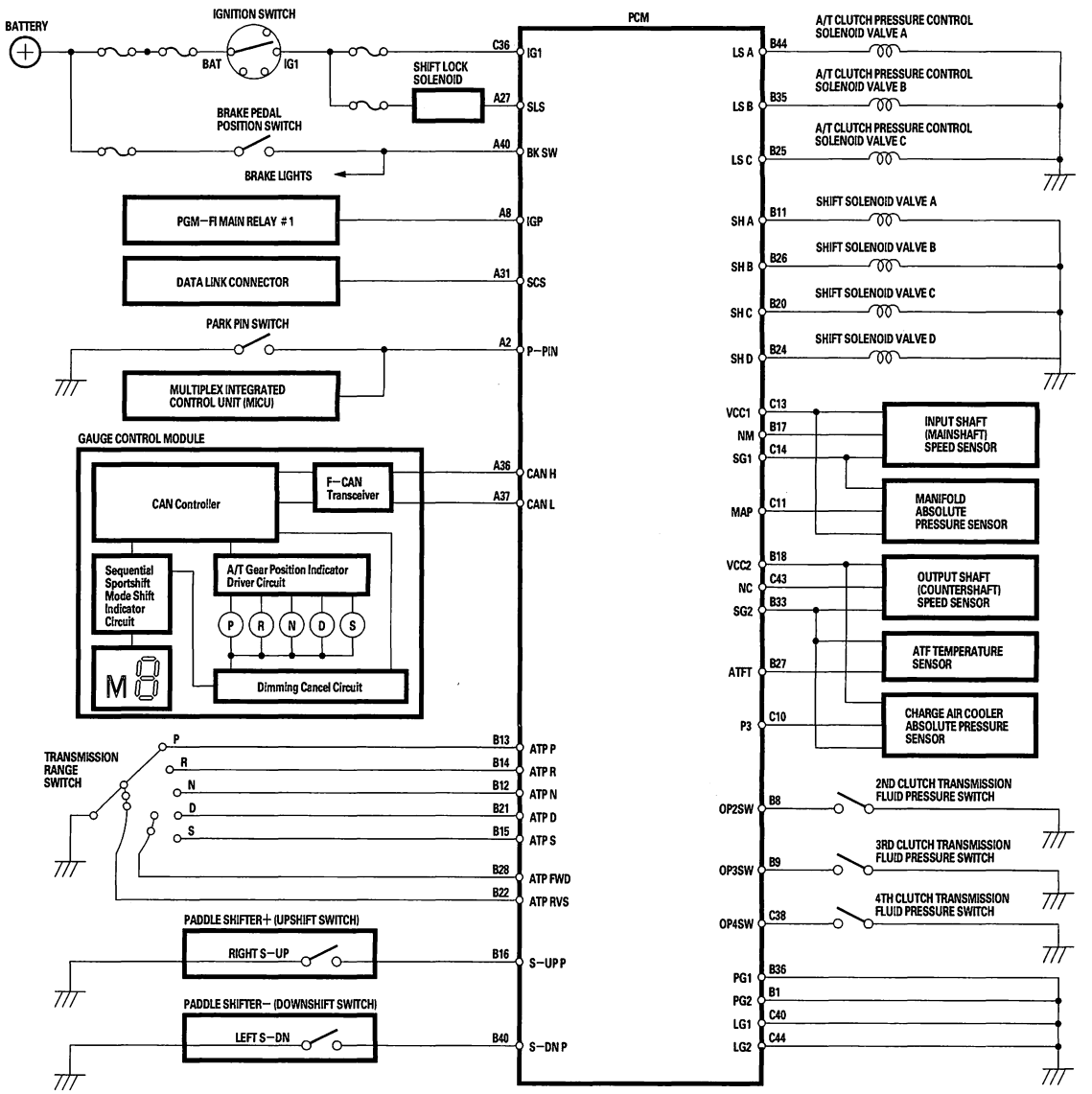


PCM Harness Connector Terminal Locations

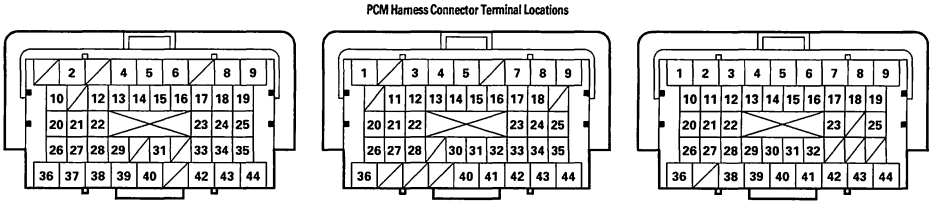

A (44P) B (44P) C (44P)

Terminal side of female terminals



BACK

Protected by AR

**PCM A/T Control System Inputs and Outputs**

**PCM Harness Connector Terminal Locations**

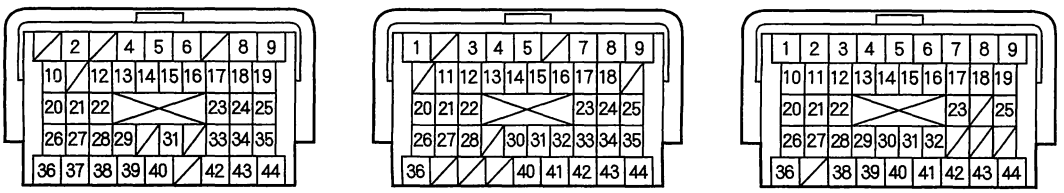

**A (44P)** **B (44P)** **C (44P)**

Terminal side of female terminals

**PCM CONNECTOR A (44P)**

| Terminal Number | Wire Color | Terminal Name | Description | Signal |
|---|---|---|---|---|
| A2 | LT GRN | P-PIN (PARK PIN SWITCH) | Detects park pin switch signal | With ignition switch ON (II):<br>• In P position: Battery voltage<br>• In other than P position: About 0 V |
| A8 | ORN | IGP (POWER SOURCE) | Power source for PCM circuit | With ignition switch ON (II): Battery voltage<br>With ignition switch OFF: 0 V |
| A27 | PNK | SLS (SHIFT LOCK SOLENOID) | Drives shift lock solenoid | With ignition switch ON (II), in P position, brake pedal pressed, and accelerator released: About 0 V |
| A31 | ORN | SCS (SERVICE CHECK SIGNAL) | Detects service check signal | With service check signal shorted with the HDS: About 0 V<br>With service check signal opened: About 5 V |
| A36 | WHT | CAN H (CAN COMMUNICATION SIGNAL HIGH) | Sends communication signal | With ignition switch ON (II): Pulses |
| A37 | RED | CAN L (CAN COMMUNICATION SIGNAL LOW) | Sends communication signal | With ignition switch ON (II): Pulses |
| A40 | LT GRN | BK SW (BRAKE PEDAL POSITION SWITCH) | Detects brake pedal position switch signal | With brake pedal released: About 0 V<br>With brake pedal pressed: Battery voltage |

**PCM CONNECTOR B (44P)**

| Terminal Number | Wire Color | Terminal Name | Description | Signal |
|---|---|---|---|---|
| B1 | BLK | PG2 (POWER GROUND) | Ground circuit for PCM circuit | Less than 1.0 V at all times |
| B8 | BLU/RED | OP2SW (2ND CLUTCH TRANSMISSION FLUID PRESSURE SWITCH) | Detects 2nd clutch transmission fluid pressure switch signal | With ignition switch ON (II):<br>• Without 2nd clutch pressure: About 5 V<br>• With 2nd clutch pressure: About 0 V |
| B9 | BLU/WHT | OP3SW (3RD CLUTCH TRANSMISSION FLUID PRESSURE SWITCH) | Detects 3rd clutch transmission fluid pressure switch signal | With ignition switch ON (II):<br>• Without 3rd clutch pressure: About 5 V<br>• With 3rd clutch pressure: About 0 V |
| B11 | BLU/YEL | SH A (SHIFT SOLENOID VALVE A) | Drives shift solenoid valve A | In R position, and 2nd and 3rd in D and S positions: Battery voltage<br>In P and N positions, and 1st, 4th, and 5th in D and S positions: 0 V |

(cont'd)

Protected by AR



## System Description (cont'd)

### Electronic Control System (cont'd)

**PCM A/T Control System Inputs and Outputs (cont'd)**

**PCM Harness Connector Terminal Locations**

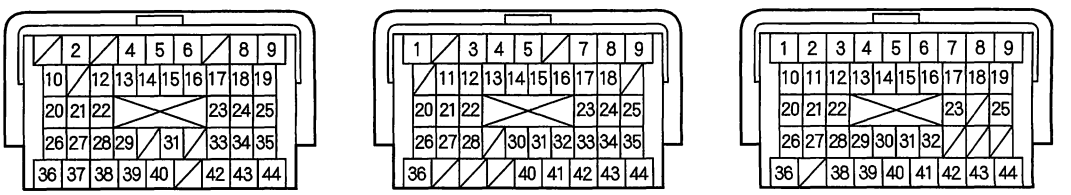

**A (44P)** **B (44P)** **C (44P)**

Terminal side of female terminals

**PCM CONNECTOR B (44P)**

| Terminal Number | Wire Color | Terminal Name | Description | Signal |
|---|---|---|---|---|
| B12 | RED/BLK | ATP N (TRANSMISSION RANGE SWITCH N POSITION) | Detects transmission range switch N position signal | In N position: 0 V<br>In any position other than N: About 5 V |
| B13 | BLU/BLK | ATP P (TRANSMISSION RANGE SWITCH P POSITION) | Detects transmission range switch P position signal | In P position: 0 V<br>In any position other than P: About 5 V |
| B14 | WHT | ATP R (TRANSMISSION RANGE SWITCH R POSITION) | Detects transmission range switch R position signal | In R position: 0 V<br>In any position other than R: About 5 V |
| B15 | RED | ATP S (TRANSMISSION RANGE SWITCH S) | Detects transmission range switch S signal input | In S position: 0 V<br>In any position other than S: Battery voltage |
| B16 | WHT/BLU | S-UP P (PADDLE SHIFTER + (UPSHIFT SWITCH)) | Detects paddle shifter + (upshift switch) signal | With ignition switch ON (II):<br>• Paddle shifter + (upshift switch) pressed: About 0 V<br>• Paddle shifter − (downshift switch) released: Battery voltage |
| B17 | RED | NM (INPUT SHAFT (MAINSHAFT) SPEED SENSOR) | Detects input shaft (mainshaft) speed sensor signal | With ignition switch ON (II): 0 V or about 5 V<br>With engine running in N position: About 2.5 V |
| B18 | YEL/BLU | VCC2 (SENSOR VOLTAGE) | Provides sensor voltage | With ignition switch ON (II): About 5 V<br>With ignition switch OFF: 0 V |
| B20 | GRN | SH C (SHIFT SOLENOID VALVE C) | Drives shift solenoid valve C | In 1st, 3rd, and 5th in D and S positions: Battery voltage<br>In P, R, and N positions, and 2nd and 4th in D and S positions: 0 V |
| B21 | YEL | ATP D (TRANSMISSION RANGE SWITCH D POSITION) | Detects transmission range switch D position signal input | In D position: 0 V<br>In any position other than D: Battery voltage |
| B22 | RED/WHT | ATP RVS (TRANSMISSION RANGE SWITCH R POSITION) | Detects transmission range switch P, R, and N position signal | In P, R, and N positions: 0 V<br>In any position other than P, R, and N: Battery voltage |
| B24 | YEL | SH D (SHIFT SOLENOID VALVE D) | Drives shift solenoid valve D | In N position, In D and S positions during no lock-up condition: 0 V<br>In P and R positions, and D and S positions during lock-up condition: Battery voltage |



BACK

Protected by AR

**PCM CONNECTOR B (44P)**

| Terminal Number | Wire Color | Terminal Name | Description | Signal |
|---|---|---|---|---|
| B25 | GRN/RED | LS C (A/T CLUTCH PRESSURE CONTROL SOLENOID VALVE C) | Drives A/T clutch pressure control solenoid valve C | With ignition switch ON (II): Pulses |
| B26 | GRN/WHT | SH B (SHIFT SOLENOID VALVE B) | Drives shift solenoid valve B | In P, R, and N positions, and 1st, 2nd, and 5th in D and S positions: Battery voltage<br>In 3rd and 4th in D and S positions: 0 V |
| B27 | BLU/YEL | ATFT (ATF TEMPERATURE SENSOR) | Detects ATF temperature sensor signal | With ignition switch ON (II):<br>About 0.2 — 4.0 V depending on ATF temperature<br>With ignition switch OFF: 0 V |
| B28 | BLU/YEL | ATP FWD (TRANSMISSION RANGE SWITCH D AND S) | Detects transmission range switch D and S signal input | In D and S position: 0 V<br>In any position other than D and S: Battery voltage |
| B33 | GRN/YEL | SG2 (SENSOR GROUND) | Sensor ground | Less than 1.0 V at all times |
| B35 | BRN/WHT | LS B (A/T CLUTCH PRESSURE CONTROL SOLENOID VALVE B) | Drives A/T clutch pressure control solenoid valve B | With ignition switch ON (II): Pulses |
| B36 | BLK | PG1 (POWER GROUND) | Ground circuit for PCM circuit | Less than 1.0 V at all times |
| B40 | BRN/WHT | S-DN P (PADDLE SHIFTER — (DOWNSHIFT SWITCH)) | Detects paddle shifter — (downshift switch) signal | With ignition switch ON (II):<br>• Paddle shifter — (downshift switch) pressed: About 0 V<br>• Paddle shifter — (downshift switch) released: About 5 V |
| B44 | RED | LS A (A/T CLUTCH PRESSURE CONTROL SOLENOID VALVE A) | Drives A/T clutch pressure control solenoid valve A | With ignition switch ON (II): Pulses |

**PCM CONNECTOR C (44P)**

| Terminal Number | Wire Color | Terminal Name | Description | Signal |
|---|---|---|---|---|
| C11 | GRN/RED | MAP (MANIFOLD ABSOLUTE PRESSURE (MAP) SENSOR) | Detects MAP sensor signal | With ignition switch ON (II): About 2.0 V<br>At idle About 1.0 V depending on engine speed |
| C13 | YEL/RED | VCC1 (SENSOR VOLTAGE) | Provides sensor voltage | With ignition switch ON (II): About 5 V<br>With ignition switch OFF: 0 V |
| C14 | GRN/WHT | SG1 (SENSOR GROUND) | Sensor ground | Less than 1.0 V at all times |
| C36 | BLK/YEL | IG1 (IGNITION SIGNAL) | Detects ignition signal | With ignition switch ON (II): Battery voltage<br>With ignition switch OFF: 0 V |
| C38 | BLU/YEL | OP4SW (4TH CLUTCH TRANSMISSION FLUID PRESSURE SWITCH) | Detects 4th clutch transmission fluid pressure switch signal | With ignition switch ON (II):<br>• Without 4th clutch pressure: About 5 V<br>• With 4th clutch pressure: About 0 V |
| C40 | BRN/YEL | LG1 (LOGIC GROUND) | Ground circuit for PCM circuit | Less than 1.0 V at all times |
| C43 | BLK/BLU | NC (OUTPUT SHAFT (COUNTERSHAFT) SPEED SENSOR) | Detects output shaft (countershaft) speed sensor signal | With ignition switch ON (II): 0 V or about 5 V<br>With driving: Pulses |
| C44 | BRN/YEL | LG2 (LOGIC GROUND) | Ground circuit for PCM | Less than 1.0 V at all times |

BACK

Protected by AR



## System Description (cont'd)

### Hydraulic Controls

The valve body includes the main valve body, the regulator valve body, the secondary valve body, and the accumulator body. The ATF pump is driven by splines on the end of the torque converter which is attached to the engine. Fluid flows through the regulator valve to maintain specified pressure through the main valve body to the manual valve, directing pressure to each of the clutches. Shift solenoid valves A, B, C, and D are mounted on the accumulator body. A/T clutch pressure control solenoid valves A, B, and C are mounted on the transmission housing.

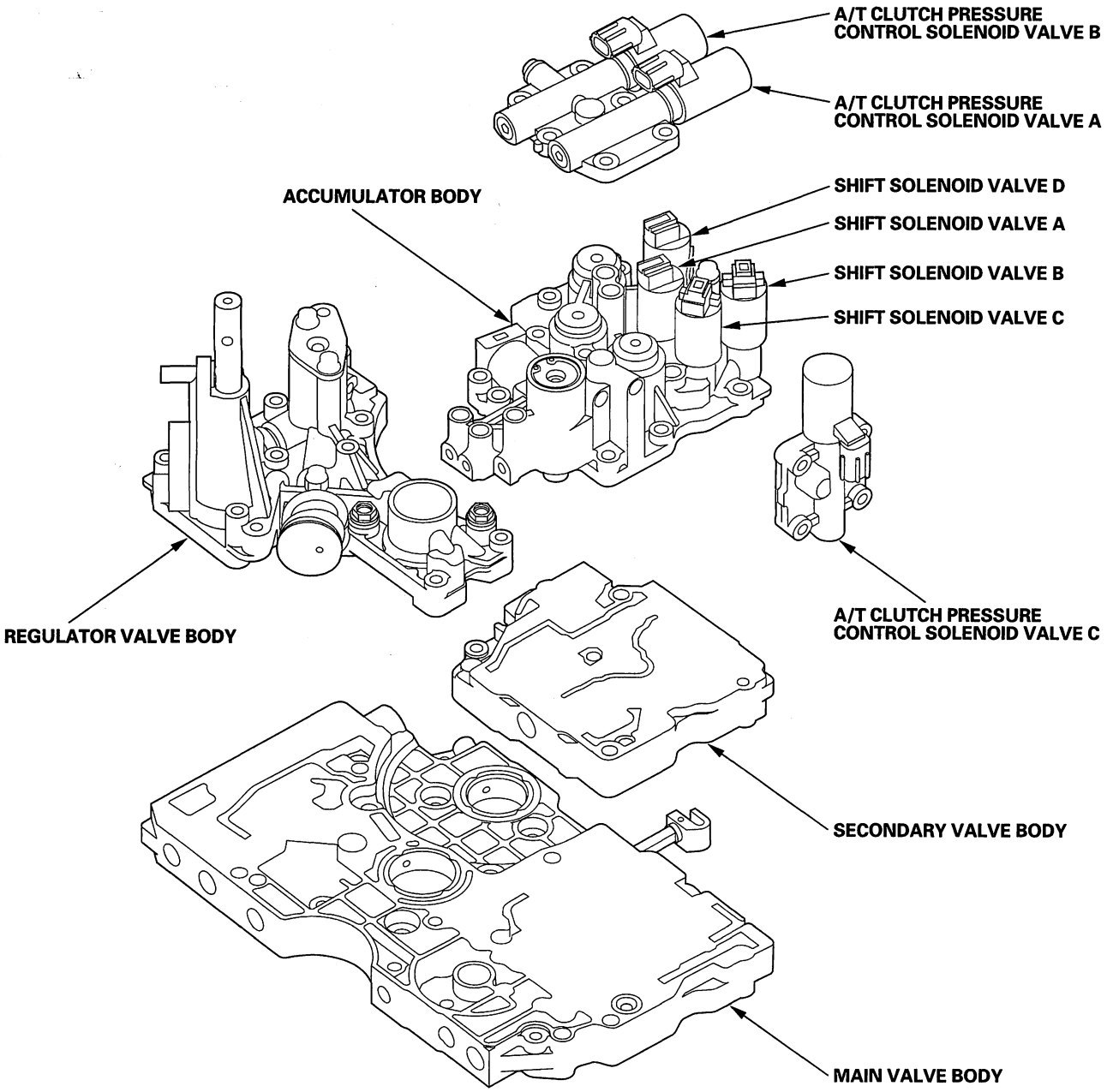




BACK

Protected by AR

**Main Valve Body**

The main valve body contains the manual valve, the modulator valve, the torque converter check valve, shift valve A, shift valve B, shift valve D, shift valve E, CPC valve C, the relief valve, the lock-up shift valve, the lock-up timing valve, the lubrication control valve, the lubrication check valve, and the ATF pump gears. The primary function of the main valve body is to switch fluid pressure on and off to control hydraulic pressure going to the hydraulic control system.

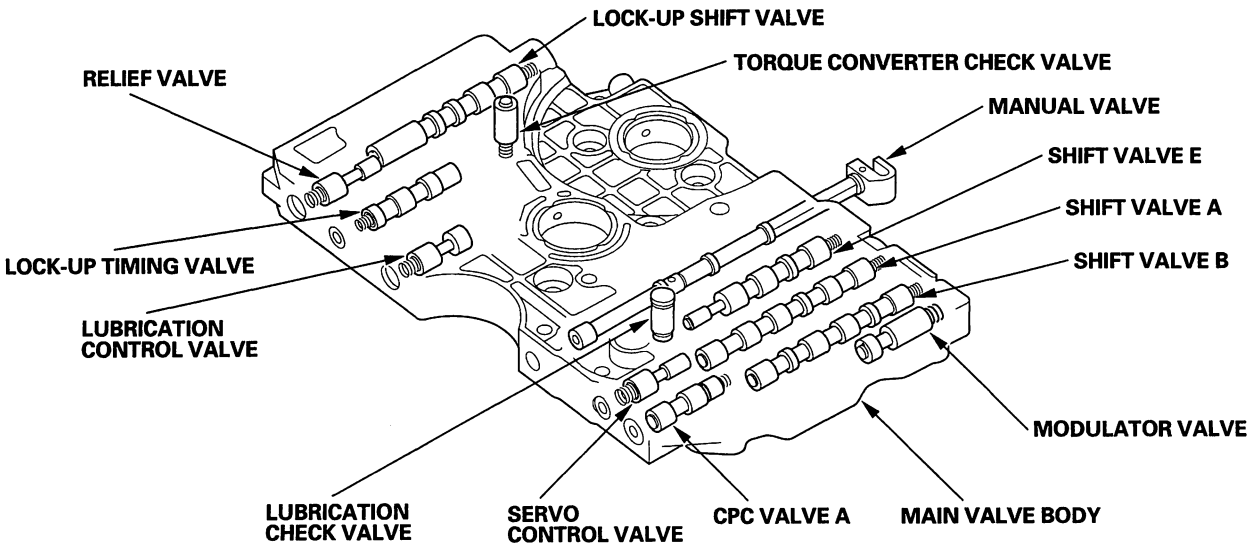


**Regulator Valve Body**

The regulator valve body is located on the main valve body. The regulator valve body contains the regulator valve, the cooler check valve, the lock-up control valve, the servo valve, and the 3rd accumulator.

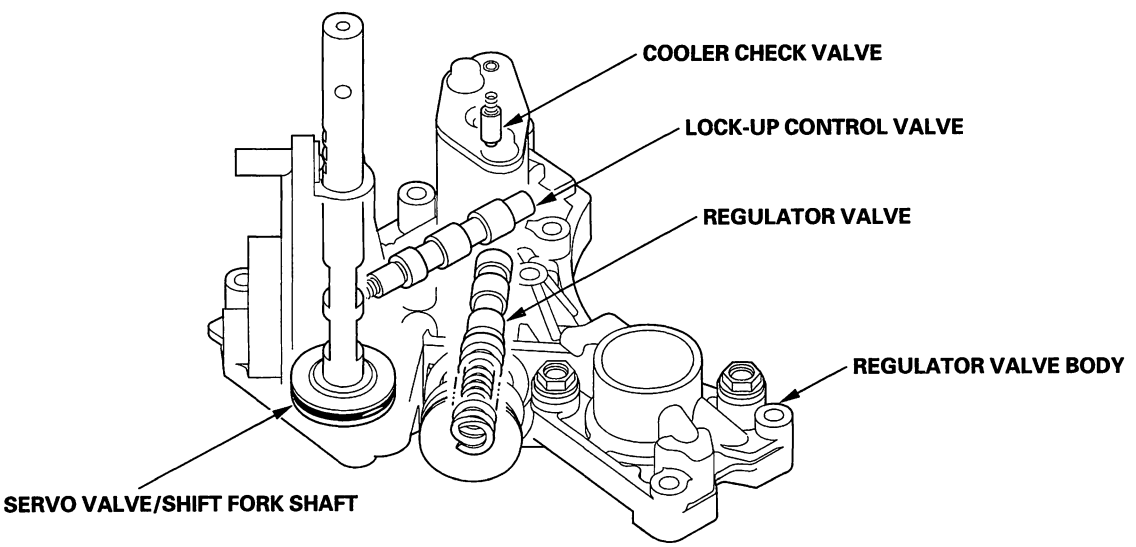


(cont'd)

Protected by AR



## System Description (cont'd)

### Hydraulic Controls (cont'd)

**Regulator Valve**

The regulator valve maintains constant hydraulic pressure from the ATF pump to the hydraulic control system, while also furnishing fluid to the lubrication system and torque converter. Fluid from the ATF pump flows through B and B'. Fluid entering from B flows through the valve orifice to the A cavity. This pressure of the A cavity pushes the regulator valve to the spring side, and this movement of the regulator valve uncovers the fluid port to the torque converter and the relief valve. The fluid flows out to the torque converter and the relief valve, and the regulator valve returns under spring force. According to the level of the hydraulic pressure through B, the position of the regulator valve changes, and the amount of fluid from B' through the torque converter changes. This operation is continued, maintaining the line pressure.

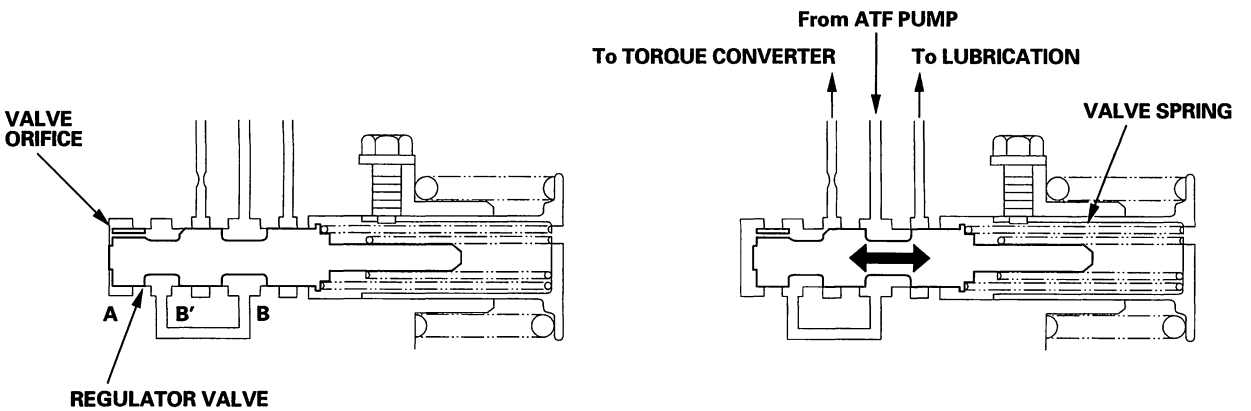


Increases in hydraulic pressure according to torque are provided by the regulator valve using stator torque reaction. The stator shaft is splined to the stator in the torque converter, and its arm end contacts the regulator spring cap. When the vehicle is accelerating or climbing (torque converter range), stator torque reaction acts on the stator shaft, and the stator arm pushes the regulator spring cap in the direction of the arrow in proportion to the reaction. The stator reaction spring compresses, and the regulator valve moves to increase the line pressure which is regulated by the regulator valve. The line pressure reaches its maximum when the stator torque reaction reaches its maximum.

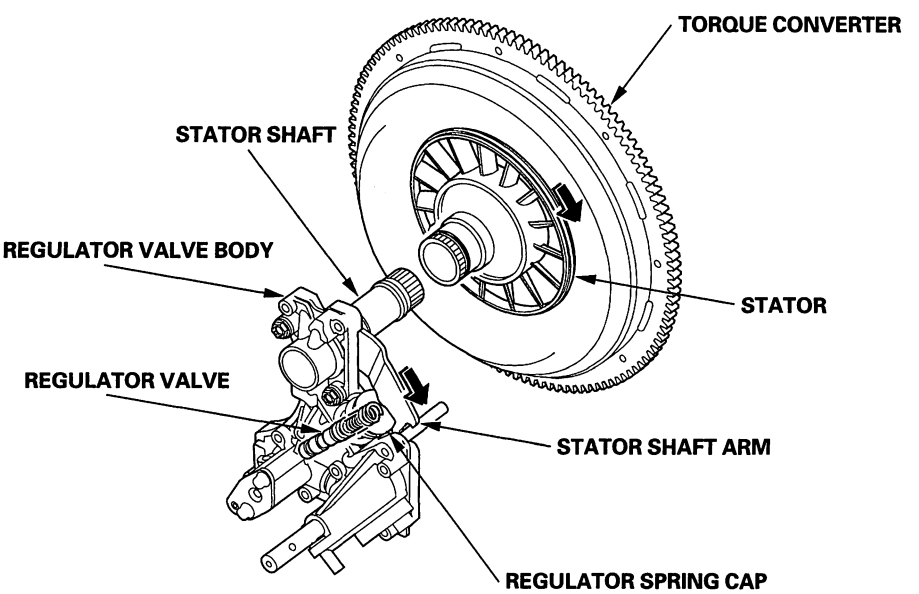




BACK

Protected by AR

**Secondary Valve Body**
The secondary valve body is on the main valve body. The secondary valve body contain shift valve C, shift valve D, CPC valve B, CPC valve C, the reverse control valve, and the reverse CPC valve.

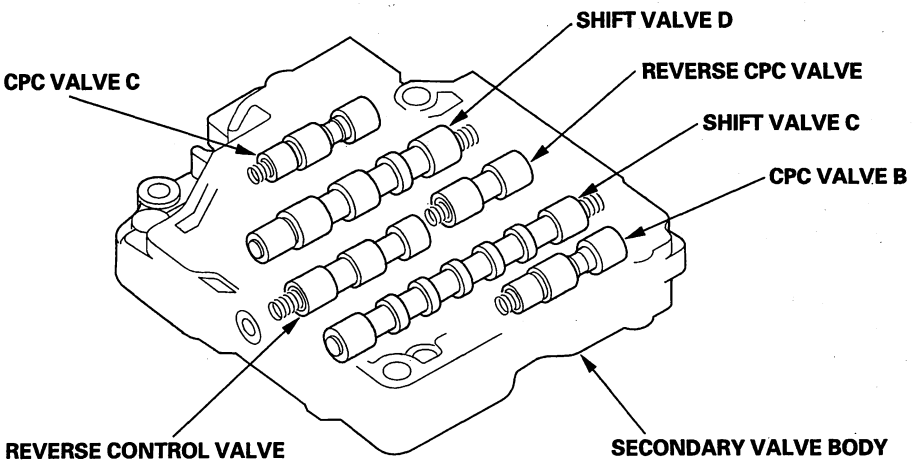


**Accumulator Body**
The accumulator body is on the secondary valve body, and contains the 1st, 1st-hold, 2nd, 4th, and 5th accumulators. The 3rd accumulator is in the regulator valve body.

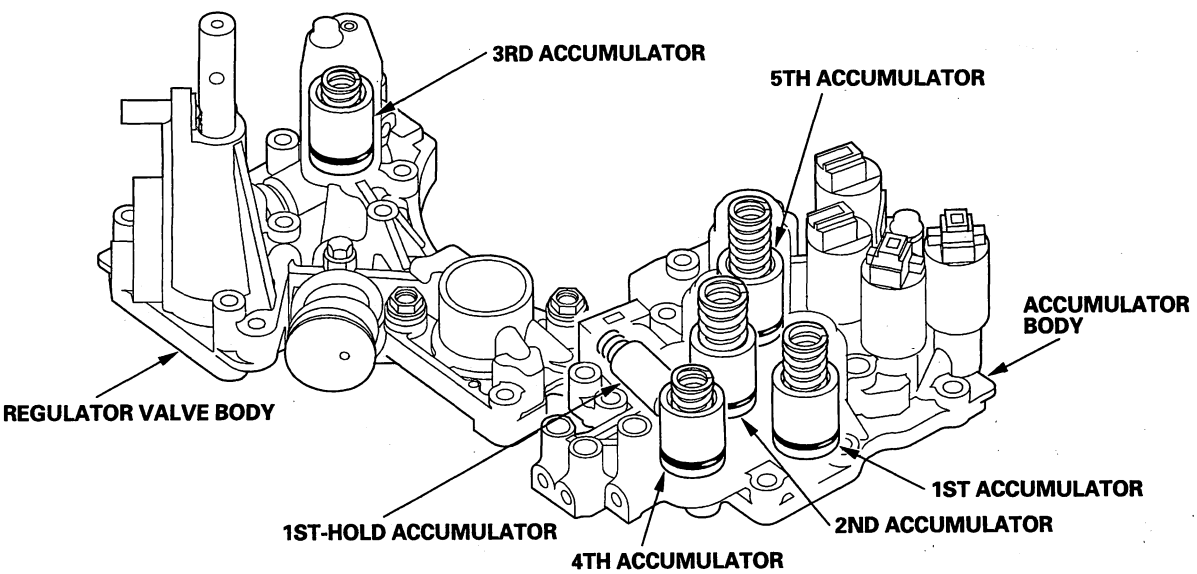

Protected by AR



## System Description (cont'd)

### Hydraulic Flow

**Distribution of Hydraulic Pressure**

As the engine turns, the ATF pump starts to operate. Automatic transmission fluid (ATF) is drawn through the ATF strainer (filter) and discharged into the hydraulic circuit. Then, ATF flowing from the ATF pump becomes line pressure that is regulated by the regulator valve. Torque converter pressure from the regulator valve enters the torque converter through the lock-up shift valve and lock-up control valve, and it is discharged from the torque converter. The torque converter check valve prevents torque converter pressure from rising.

The PCM controls shift solenoid valves A, B, C, and D ON and OFF, and the shift solenoid valves control shift solenoid pressure to the shift valves. Applying shift solenoid pressure to the shift valves moves the position of the shift valve, and switches the port of hydraulic pressure. The PCM also controls A/T clutch pressure control solenoid valves A, B and C. The A/T clutch pressure control solenoid valves regulate hydraulic pressure, and apply the pressure to CPC valves A, B and C.

When shifting between gears, the clutch is engaged by pressure from the CPC pressure mode. The PCM controls one of the shift solenoid valves to move the position of the shift valve. This movement switches the port of CPC pressure and line pressure. Line pressure is then applied to the clutch, and CPC pressure is released. Engaging the clutch with line pressure mode happens when shifting is completed.

**Hydraulic Pressure at the Port for use in the hydraulic circuit**

| Port | Hydraulic pressure | Port | Hydraulic pressure |
|---|---|---|---|
| 1 | Line | SC | Shift solenoid valve C |
| 2 | Line | SC' | Shift solenoid valve C |
| 3 | Line | SD | Shift solenoid valve D |
| 3' | Line | 10 | 1st clutch |
| 3" | Reverse CPC or Line | 15 | 1st-hold clutch |
| 3A | Line | 20 | 2nd clutch |
| 3B | Reverse CPC | 30 | 3rd clutch |
| 4 | Line | 40 | 4th clutch |
| 4' | Line | 50 | 5th clutch |
| 4" | Line | 51 | 5th clutch |
| 4A | CPC A | 56 | A/T clutch pressure control solenoid valve A |
| 4B | CPC B | 57 | A/T clutch pressure control solenoid valve B |
| 4C | CPC C | 5R | A/T clutch pressure control solenoid valve B |
| 5A | CPC A | 58 | A/T clutch pressure control solenoid valve C |
| 5B | CPC A or Line | 90 | Torque converter |
| 5C | CPC B or Line | 90' | Torque converter |
| 5D | CPC B | 91 | Torque converter |
| 5E | CPC C | 91' | Torque converter |
| 5F | CPC C | 92 | Torque converter |
| 5G | CPC C | 93 | ATF cooler |
| 5H | CPC B or Line | 94 | Torque converter |
| 5J | CPC B or Line | 95 | Lubrication |
| 5K | CPC A or Line | 95' | Lubrication |
| 5L | CPC A or Line | 96 | Torque converter |
| 5M | Line | 99 | Suction |
| 5N | CPC C | X | Drain |
| 6 | Modulator | HX | High position drain |
| SA | Shift solenoid valve A | AX | Air drain |
| SB | Shift solenoid valve B | — | — |



BACK

Protected by AR

**N Position**

Line pressure (1) regulated by the regulator valve flows to shift solenoid valves. The PCM controls the shift solenoid valves ON and OFF. The conditions of the shift solenoid valves and the positions of the shift valves are as follows:

- Shift solenoid valve A is OFF, and closes the port of shift solenoid valve A pressure (SA); shift valve A stays on the left side.
- Shift solenoid valve B is turned ON, and closes the port of shift solenoid valve B pressure (SB); shift valve B and shift valve E stay on the left side.
- Shift solenoid valve C is OFF, and opens the port of shift solenoid valve C pressure (SC); shift valve C and shift valve D move to the right side.
- Shift solenoid valve D is OFF, and closes the port of shift solenoid valve D pressure (SD).

Line pressure (1) also flows to the modulator valve and becomes modulator pressure (6). Modulator pressure (6) flows to the A/T clutch pressure control solenoid valves. The manual valve covers the port leading pressure to the clutches, and hydraulic pressure is not applied to the clutches.

NOTE: When used, "left" or "right" indicates direction on the hydraulic circuit.

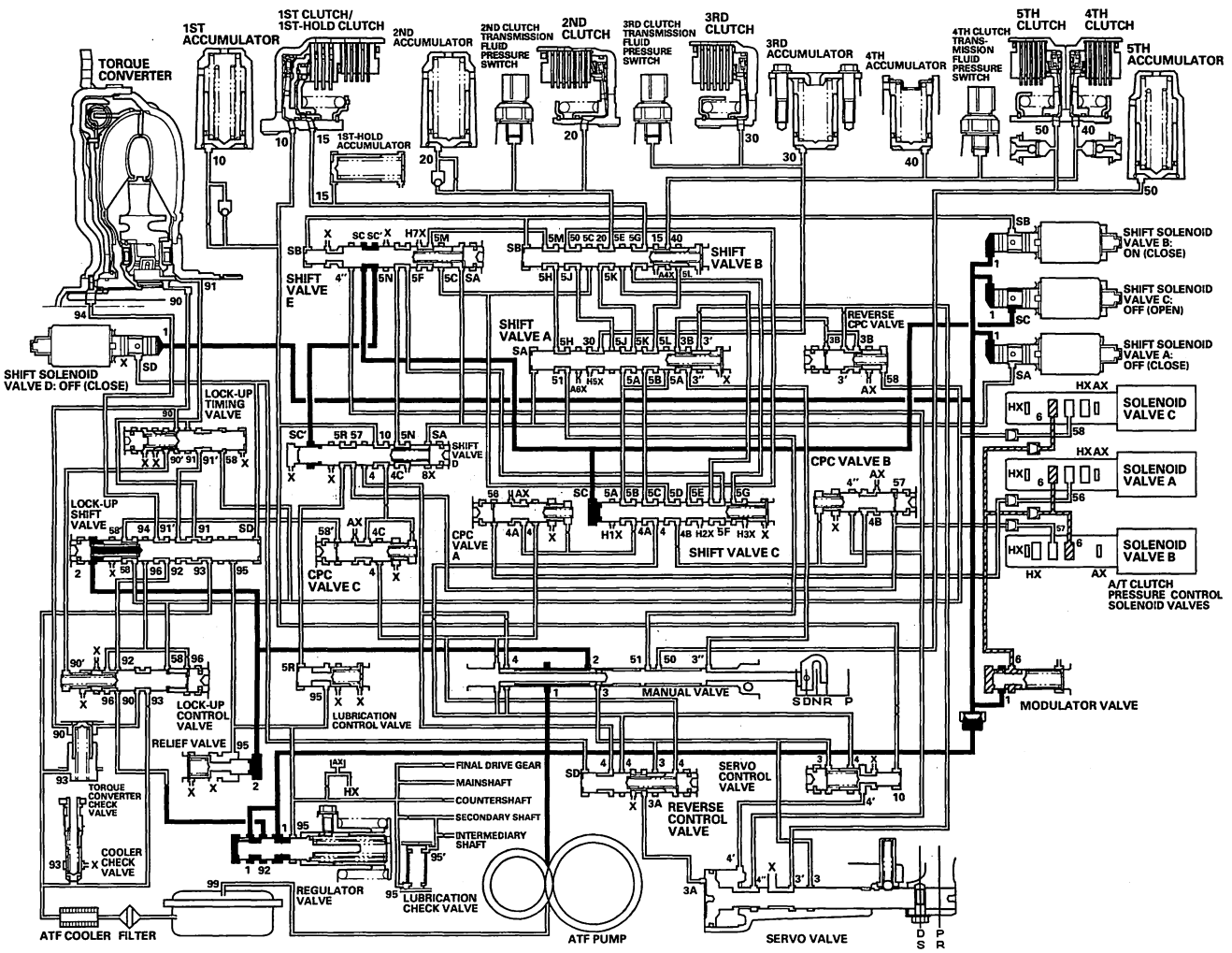


(cont'd)

Protected by AR



## System Description (cont'd)

### Hydraulic Flow (cont'd)

**D Position and S Position in Automatic Shifting Mode: 1st gear shifting from the N position**
When shifting to the D position or S position from the N position, the condition of the shift solenoid valves remain the same as in the N position. The manual valve is moved to the D position, and uncovers the port of line pressure (4) leading to CPC valves A and C. The PCM controls the A/T clutch pressure control solenoid valves A and C, A/T clutch pressure control solenoid valve A pressure (56) flows to the CPC valve A, and A/T clutch pressure control solenoid valve C pressure (58) flows to the CPC valve C. CPC valves A and C regulate line pressure (4), line pressure (4) becomes CPC C pressure (4C) at the CPC valve C, and becomes CPC A pressure at CPC valve A. CPC C pressure (4C) becomes 1st clutch pressure (10) at shift valve D, and 1st clutch pressure flows to the 1st clutch. CPC A pressure (4A) becomes 2nd clutch pressure (20) at shift valve B via shift valves A and C. The 1st clutch and 2nd clutch engage gently with the CPC pressure mode.

NOTE: When used, "left" or "right" indicates direction on the hydraulic circuit.

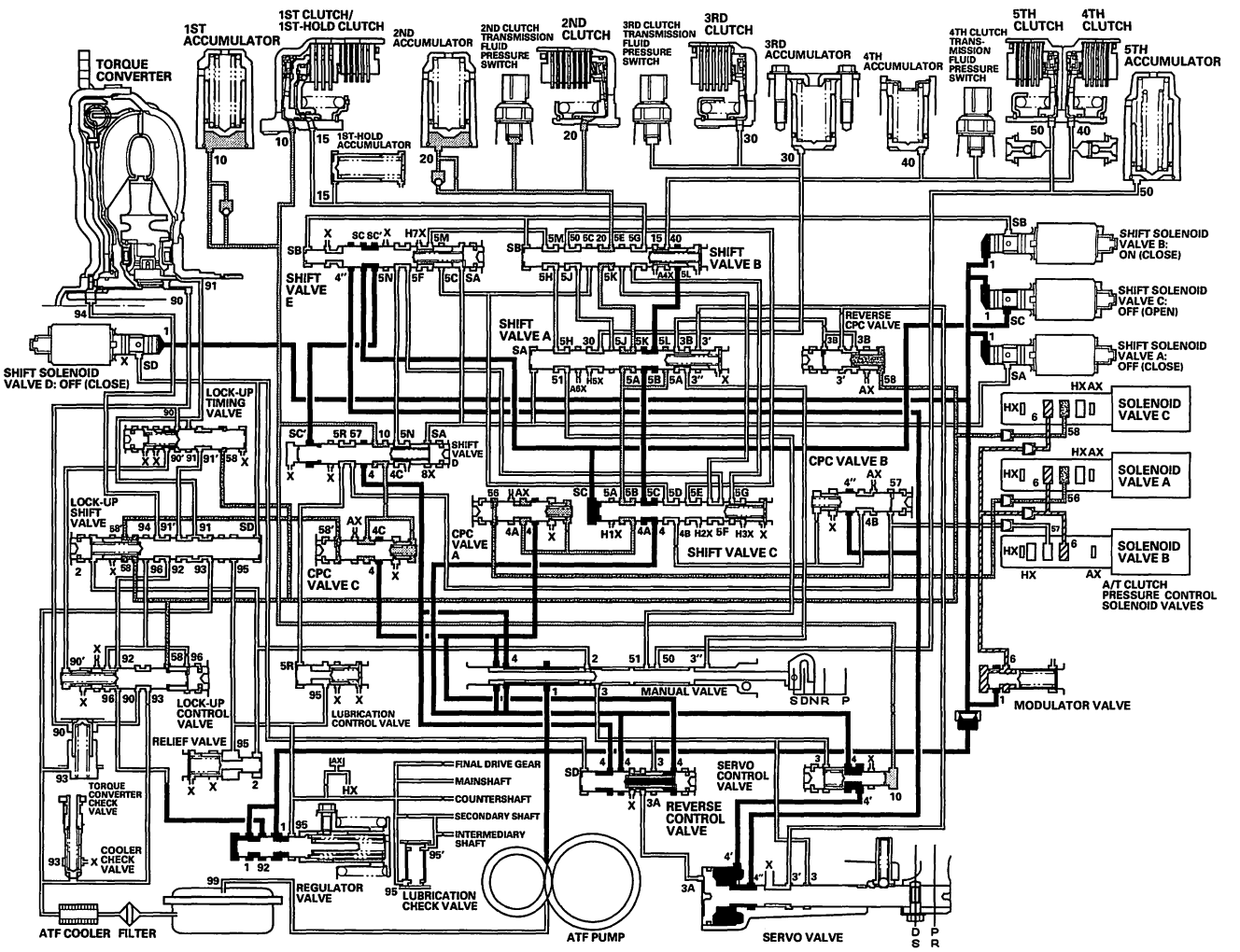




BACK

Protected by AR

**D Position and S Position in Automatic Shifting Mode: Driving in1st gear**

The PCM turns shift solenoid valve C ON, and shift solenoid valve C covers the port of shift solenoid valve C pressure (SC) to shift valve C, and shift valve D via shift valve E. Shift solenoid valve A remains OFF, and shift solenoid valve B remains ON. Shift valves C and D are moved to the left side, shift valve D switches the port of line pressure (4) and CPC C pressure (4C) leading to the 1st clutch, and shift valve C switches the port of CPC A pressure (5A) releasing 2nd clutch pressure. Line pressure (4) becomes 1st clutch pressure (10) at shift valve D, and flows to the 1st clutch. The 1st clutch is engaged securely with the line pressure mode.

NOTE: When used, "left" or "right" indicates direction on the hydraulic circuit.

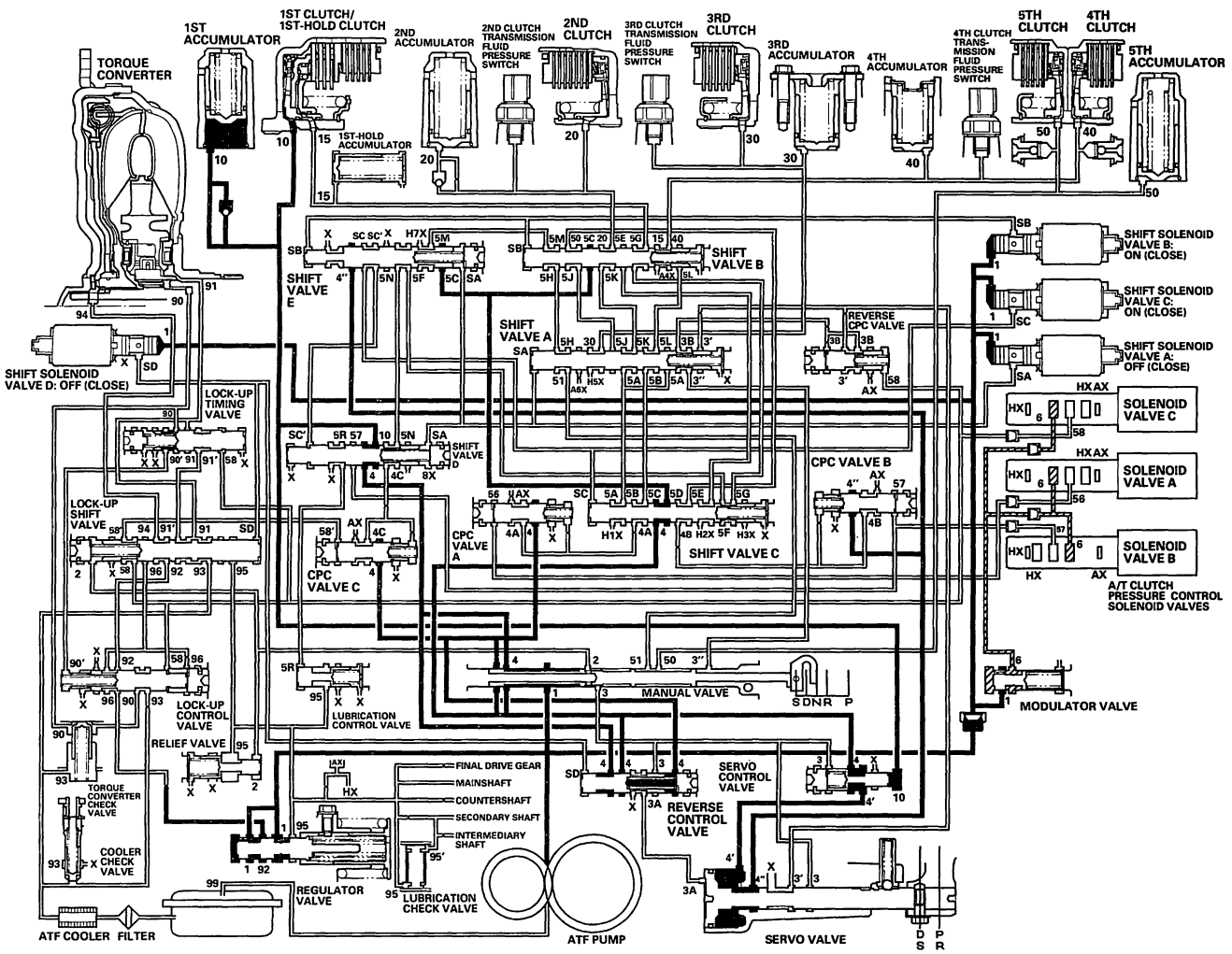


(cont'd)

Protected by AR



## System Description (cont'd)

### Hydraulic Flow (cont'd)

**D Position and S Position in Automatic Shifting Mode: Shifting between 1st gear and 2nd gear**
As the speed of the vehicle reaches the programmed value, the PCM turns shift solenoid valve A ON, and shift solenoid valve A uncovers the port of shift solenoid valve A pressure (SA) to shift valve A. Shift solenoid valves B and C remain ON. Shift valve A is moved to the right side to uncover the port of CPC A pressure (4A) leading to the 2nd clutch. The PCM controls A/T clutch pressure control solenoid valve A, and A/T clutch pressure control solenoid valve A pressure (56) is applied to CPC valve A. CPC valve A regulates line pressure (4), and line pressure (4) becomes CPC A pressure (4A). CPC A pressure (4A) flows to shift valve B via shift valves C and A, and becomes 2nd clutch pressure (20) at shift valve B. The 2nd clutch is engaged in the CPC pressure mode. The 1st clutch is also engaged, but no power is transmitted because of the one-way clutch.

NOTE: When used, "left" or "right" indicates direction on the hydraulic circuit.

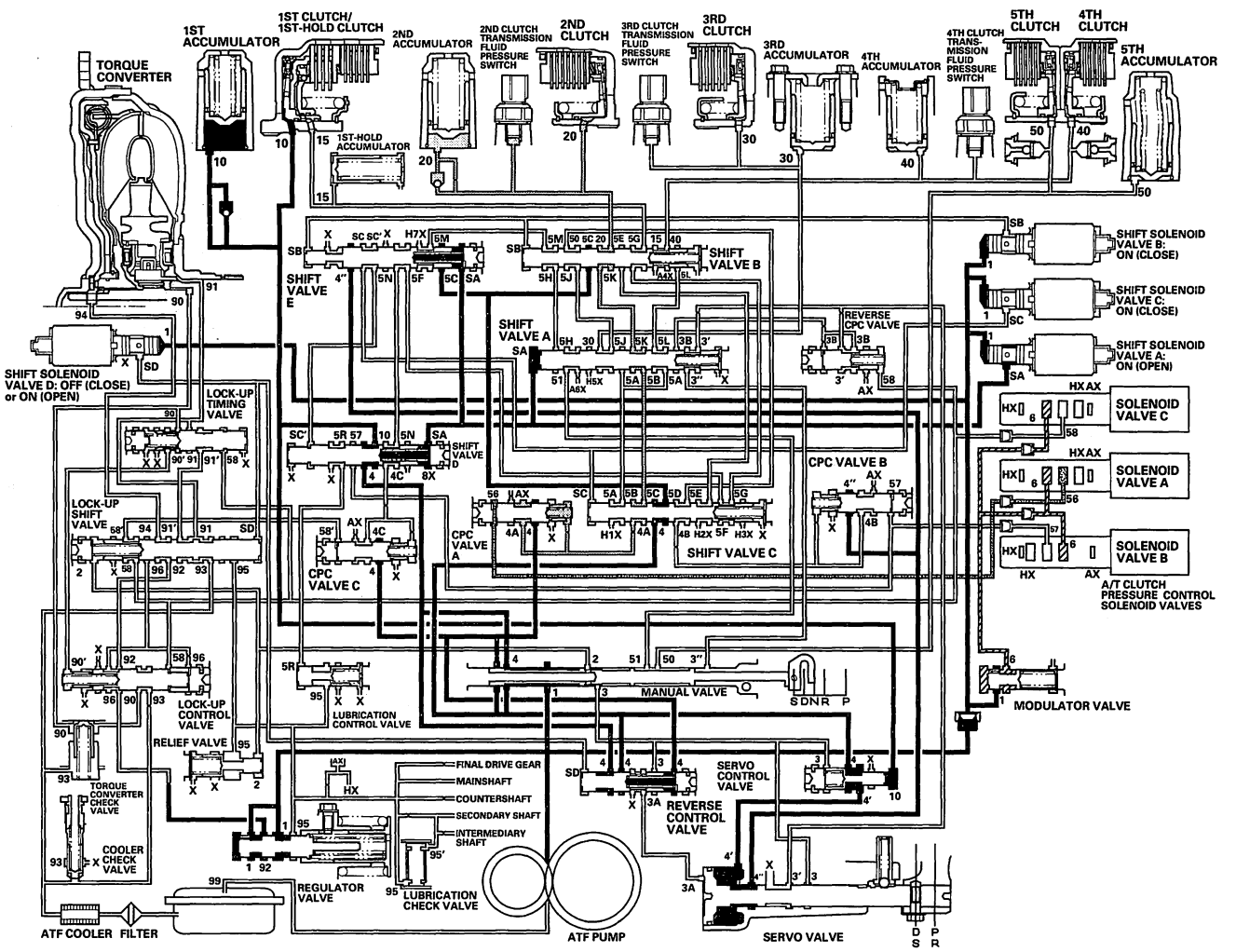




BACK

Protected by AR

**D Position and S Position in Automatic Shifting Mode: Driving in 2nd gear**

The PCM turns shift solenoid valve C OFF, and shift solenoid valve C uncovers the port of shift solenoid valve C pressure (SC) to shift valve C. Shift solenoid valves A and B remain ON. Shift valve C is moved to the right side to switch the port of line pressure (4) and CPC A pressure (4A) leading to the 2nd clutch. CPC A pressure (5B) (5K) changes to line pressure (5B) (5K) and 2nd clutch pressure (20) is changed to line pressure mode, and the 2nd clutch is engaged in the line pressure mode. The 1st clutch is also engaged, but no power is transmitted because of the one-way clutch.

NOTE: When used, "left" or "right" indicates direction on the hydraulic circuit.

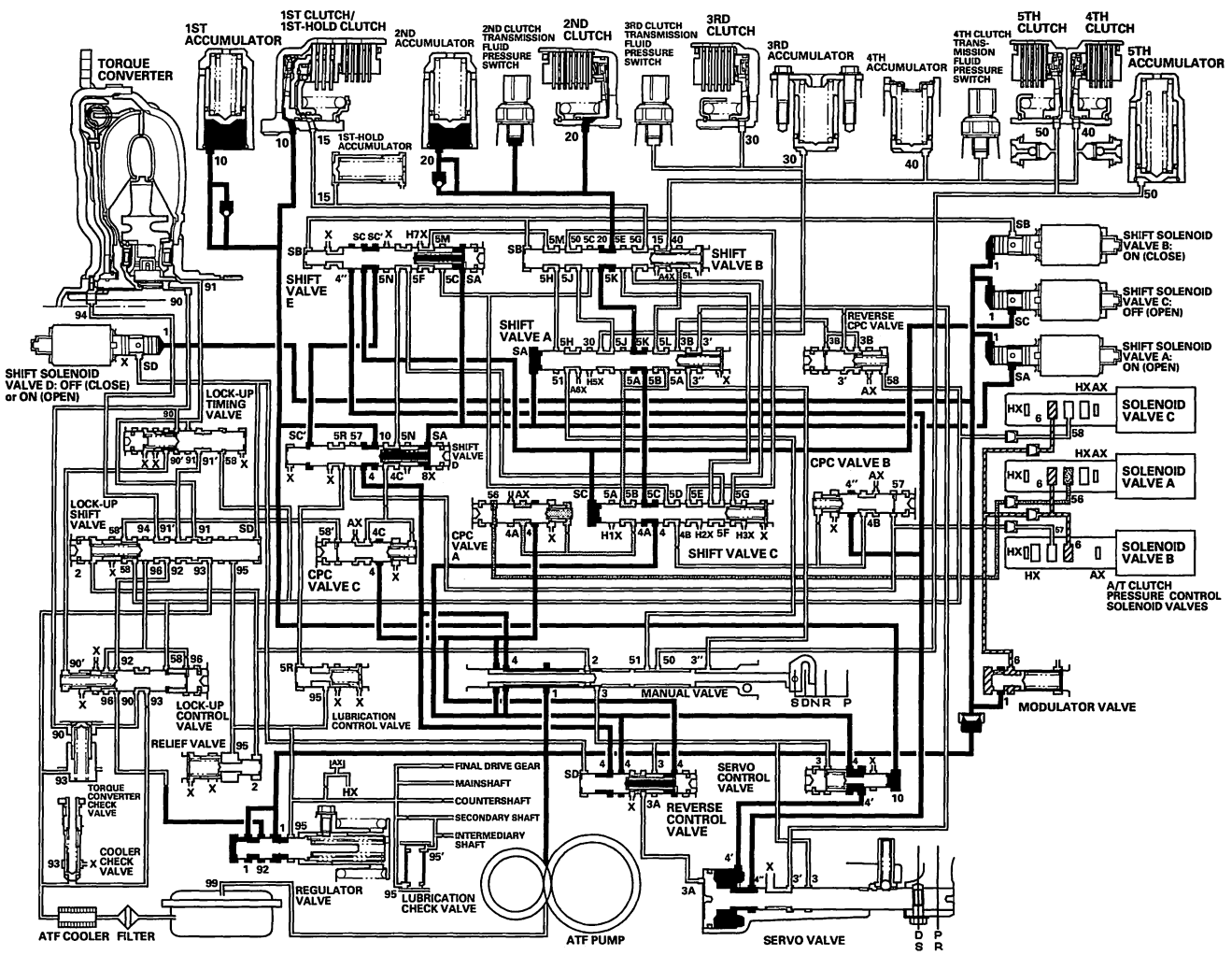


(cont'd)

Protected by AR



## System Description (cont'd)

### Hydraulic Flow (cont'd)

**D Position and S Position in Automatic Shifting Mode: Shifting between 2nd gear and 3rd gear**
As the speed of the vehicle reaches the programmed value, the PCM turns shift solenoid valve C ON, and shift solenoid valve C covers the port of shift solenoid valve C pressure (SC) to shift valve C. Shift solenoid valves A and B remain ON. Shift valve C is moved to the left side to switch the port of line pressure (4) and CPC A pressure (4A) leading to the 2nd clutch. Shift valve C also uncovers the port of CPC B pressure (4B) leading to the 3rd clutch. The PCM controls A/T clutch pressure control solenoid valves A and B. A/T clutch pressure control solenoid valve A pressure (56) is applied to CPC valve A, and A/T clutch pressure control solenoid valve B pressure (57) is applied to CPC valve B. CPC valve B regulates line pressure (4''), and line pressure (4'') becomes CPC B pressure (4B). CPC B pressure flows to shift valve A via shift valves C and B, and becomes 3rd clutch pressure (30) at shift valve A. The 2nd clutch pressure (20) is changed to CPC pressure mode, and the 3rd clutch is engaged with the CPC pressure mode. The 1st clutch is also engaged, but no power is transmitted because of the one-way clutch.

NOTE: When used, "left" or "right" indicates direction on the hydraulic circuit.

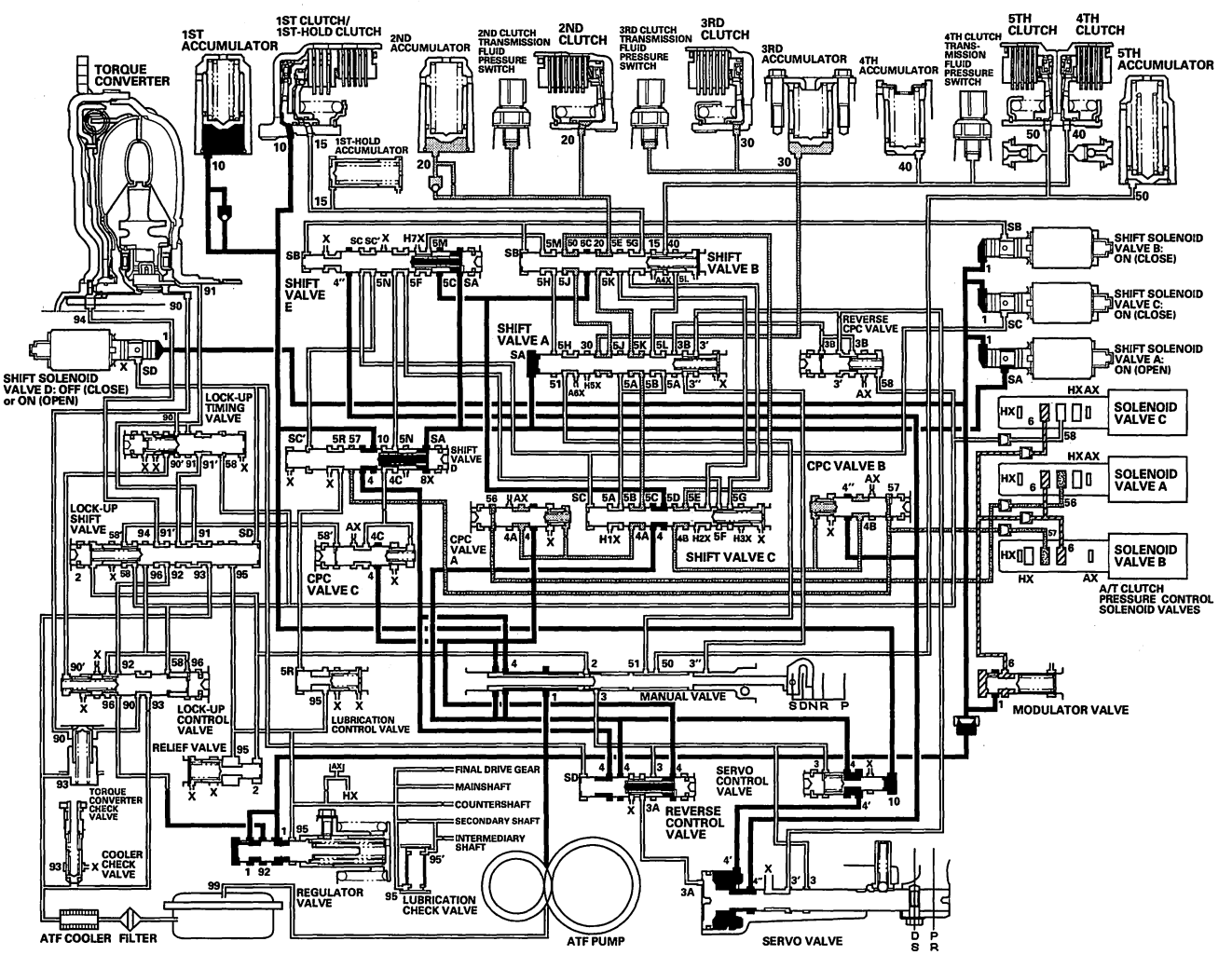




BACK

Protected by AR

**D Position and S Position in Automatic Shifting Mode: Driving in 3rd gear**

The PCM turns shift solenoid valve B OFF, and shift solenoid valve B uncovers the port of shift solenoid valve B pressure (SB) to shift valve B. Shift solenoid valves A and C remain ON. Shift valve B is moved to the right side to switch the port of line pressure (5C), CPC B pressure (5J) leading to the 3rd clutch, and 2nd clutch pressure (20) releasing 2nd clutch pressure. CPC B pressure (5J) changes to line pressure (5J) and 3rd clutch pressure (30) is changed to line pressure mode, and the 3rd clutch is engaged with the line pressure mode. The 1st clutch is also engaged, but no power is transmitted because of the one-way clutch.

NOTE: When used, "left" or "right" indicates direction on the hydraulic circuit.

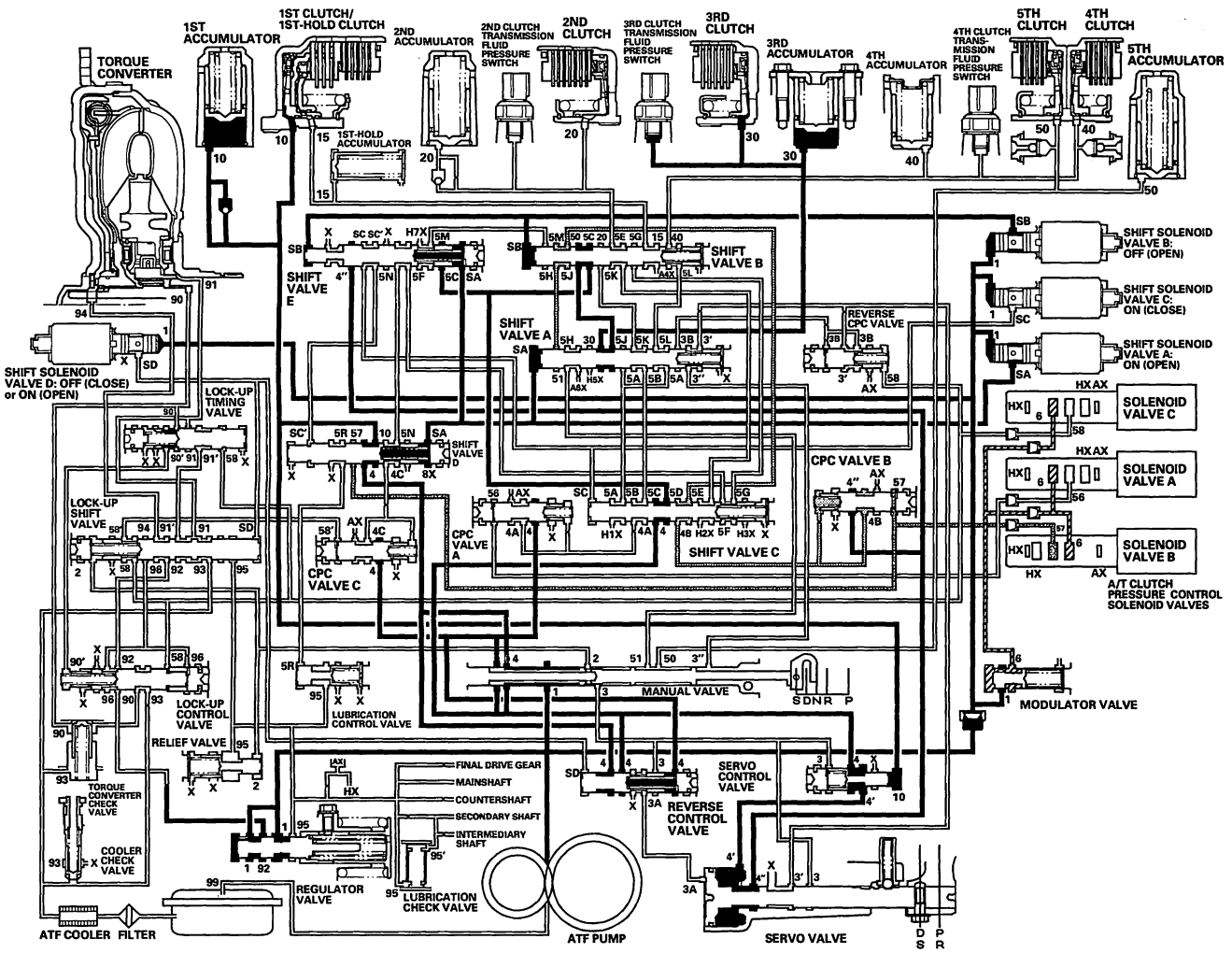


(cont'd)

Protected by AR



## System Description (cont'd)

### Hydraulic Flow (cont'd)

**D Position and S Position in Automatic Shifting Mode: Shifting between 3rd gear and 4th gear**
As the speed of the vehicle reaches the programmed value, the PCM turns shift solenoid valve C OFF, and shift solenoid valve C uncovers the port of shift solenoid valve C pressure (SC) to shift valve C. Shift solenoid valve A remains ON, and shift solenoid valve B remains OFF. Shift valve C is moved to the right side to switch the port of line pressure (4) and CPC B pressure (4B) leading to the 3rd clutch. Shift valve C also uncovers the port of CPC A pressure (4A) leading to the 4th clutch. The PCM controls A/T clutch pressure control solenoid valves A and B. A/T clutch pressure control solenoid valve A pressure (56) is applied to the CPC valve A, and A/T clutch pressure control solenoid valve B pressure (57) is applied to CPC valve B. CPC valve A regulates line pressure (4), and line pressure (4) becomes CPC A pressure (4A). CPC A pressure (4A) flows to shift valve B via shift valves C and A, and becomes 4th clutch pressure (40) at shift valve B. The 3rd clutch pressure (30) is changed to CPC pressure mode, and the 4th clutch is engaged in the CPC pressure mode. The 1st clutch is also engaged, but no power is transmitted because of the one-way clutch.

NOTE: When used, "left" or "right" indicates direction on the hydraulic circuit.

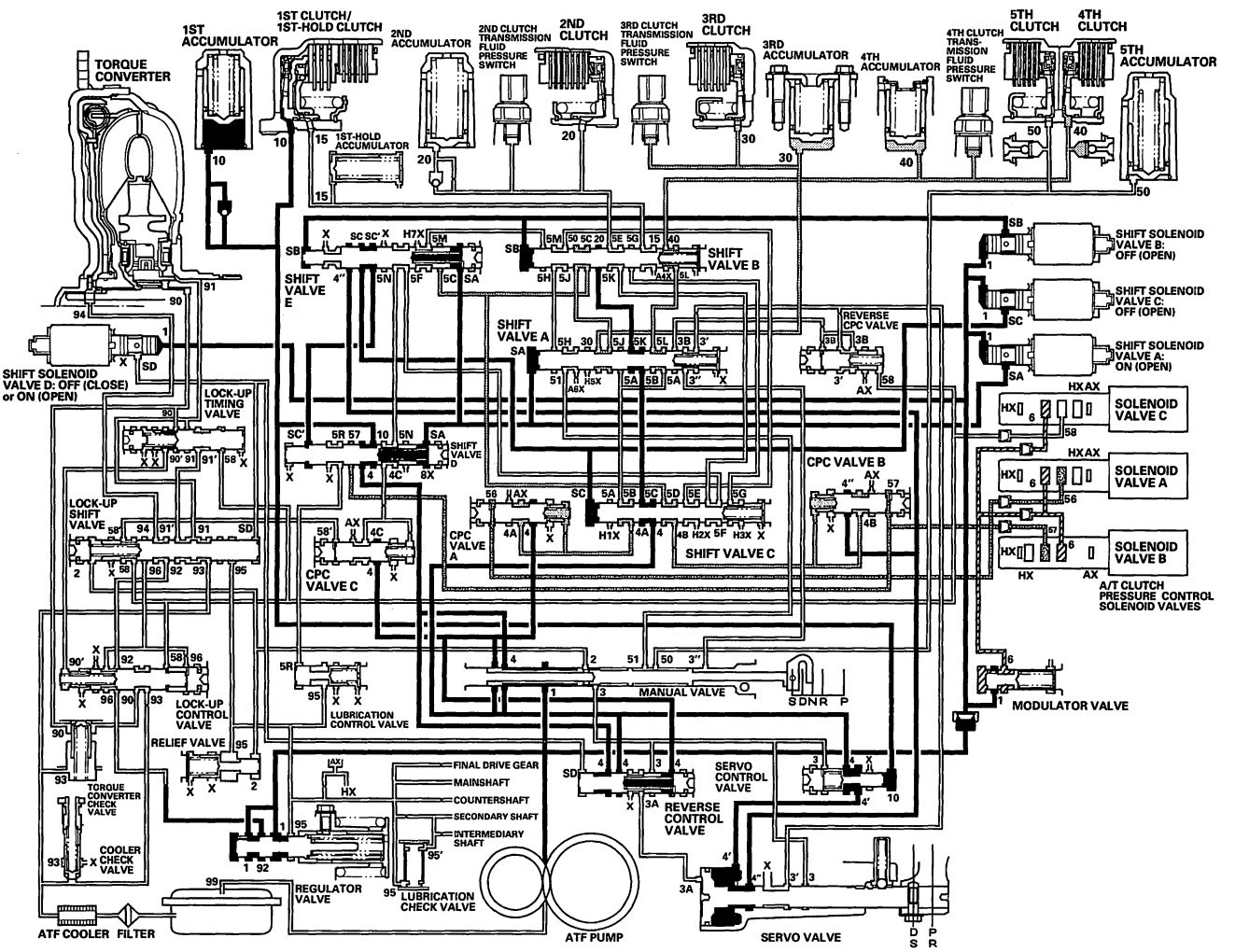




BACK

Protected by AR

**D Position and S Position in Automatic Shifting Mode: Driving in 4th gear**

The PCM turns shift solenoid valve A OFF, and shift solenoid valve A covers the port of shift solenoid valve A pressure (SA) to the shift valve A. Shift solenoid valves B and C remain OFF. The shift valve A is moved to the left side to switch the port of pressure (5B), CPC A pressure (5A) (5L) leading to the 4th clutch, and 3rd clutch pressure (30) releasing 3rd clutch pressure. CPC A pressure (5L) changes to line pressure (5L) and 4th clutch pressure (40) is changed to line pressure mode, and the 4th clutch is engaged with the line pressure mode. The 1st clutch is also engaged, but no power is transmitted because of the one-way clutch.

NOTE: When used, "left" or "right" indicates direction on the hydraulic circuit.

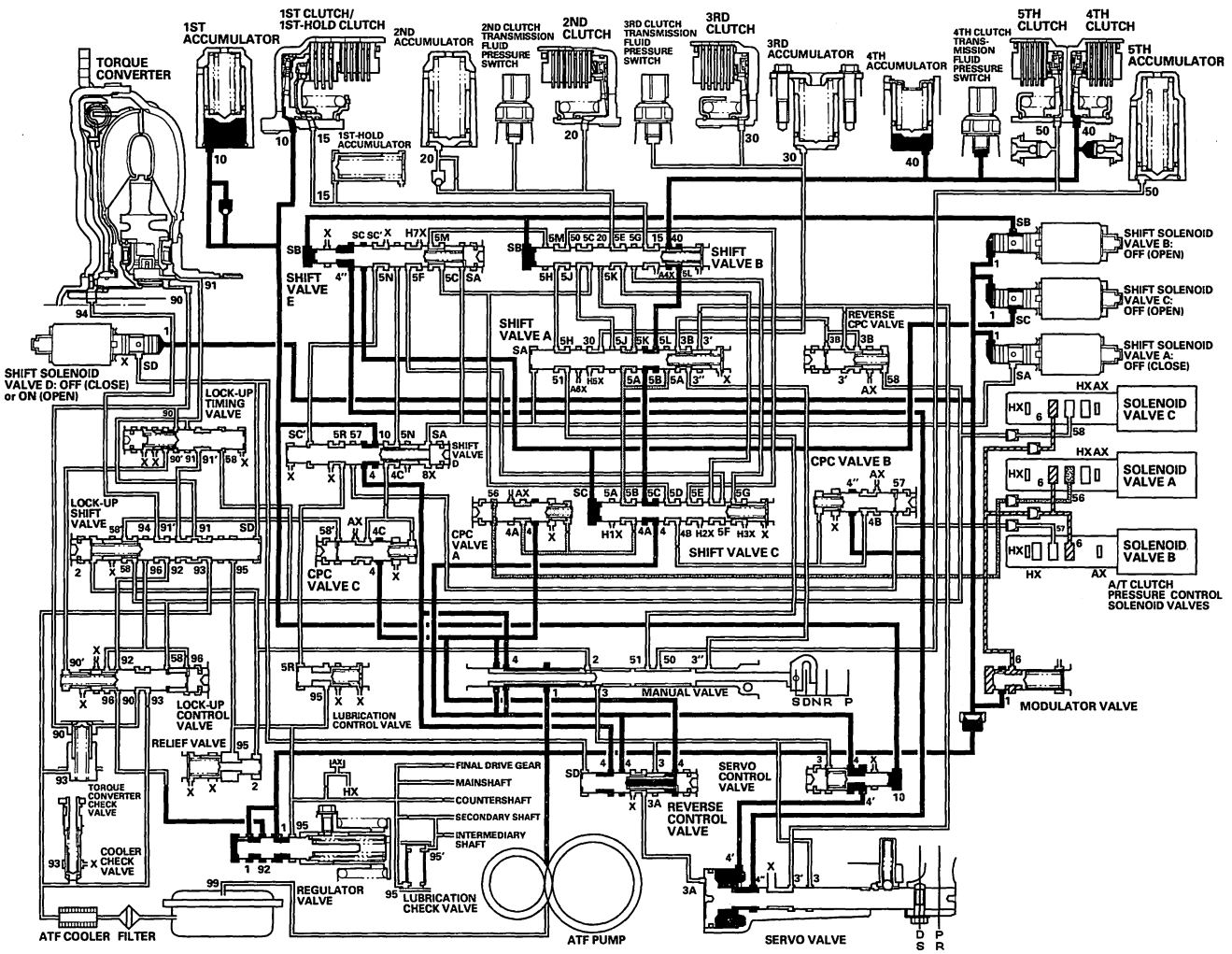


(cont'd)

Protected by AR



## System Description (cont'd)

### Hydraulic Flow (cont'd)

**D Position: Shifting between 4th gear and 5th gear**

As the speed of the vehicle reaches the programmed value, the PCM turns shift solenoid valve C ON, and shift solenoid valve C covers the port of shift solenoid valve C pressure (SC) to shift valve C. Shift solenoid valve A remains OFF, and shift solenoid valve B remains OFF. Shift valve C is moved to the left side to switch the port of line pressure (4) and CPC A pressure (4A) leading to the 4th clutch. Shift valve C also uncovers the port of CPC B pressure (4B) leading to the 5th clutch. The PCM controls A/T clutch pressure control solenoid valves A and B. A/T clutch pressure control solenoid valve A pressure (56) is applied to the CPC valve A, and A/T clutch pressure control solenoid valve B pressure (57) is applied to CPC valve B. CPC valve B regulates line pressure (4''), and line pressure (4'') becomes CPC B pressure (4B). CPC B pressure (4B) flows to shift valve A via shift valves C and B, and becomes 5th clutch pressure (51) at shift valve A. The 4th clutch pressure (40) is changed to CPC pressure mode, and the 5th clutch is engaged in the CPC pressure mode. The 1st clutch is also engaged, but no power is transmitted because of the one-way clutch.

NOTE: When used, "left" or "right" indicates direction on the hydraulic circuit.

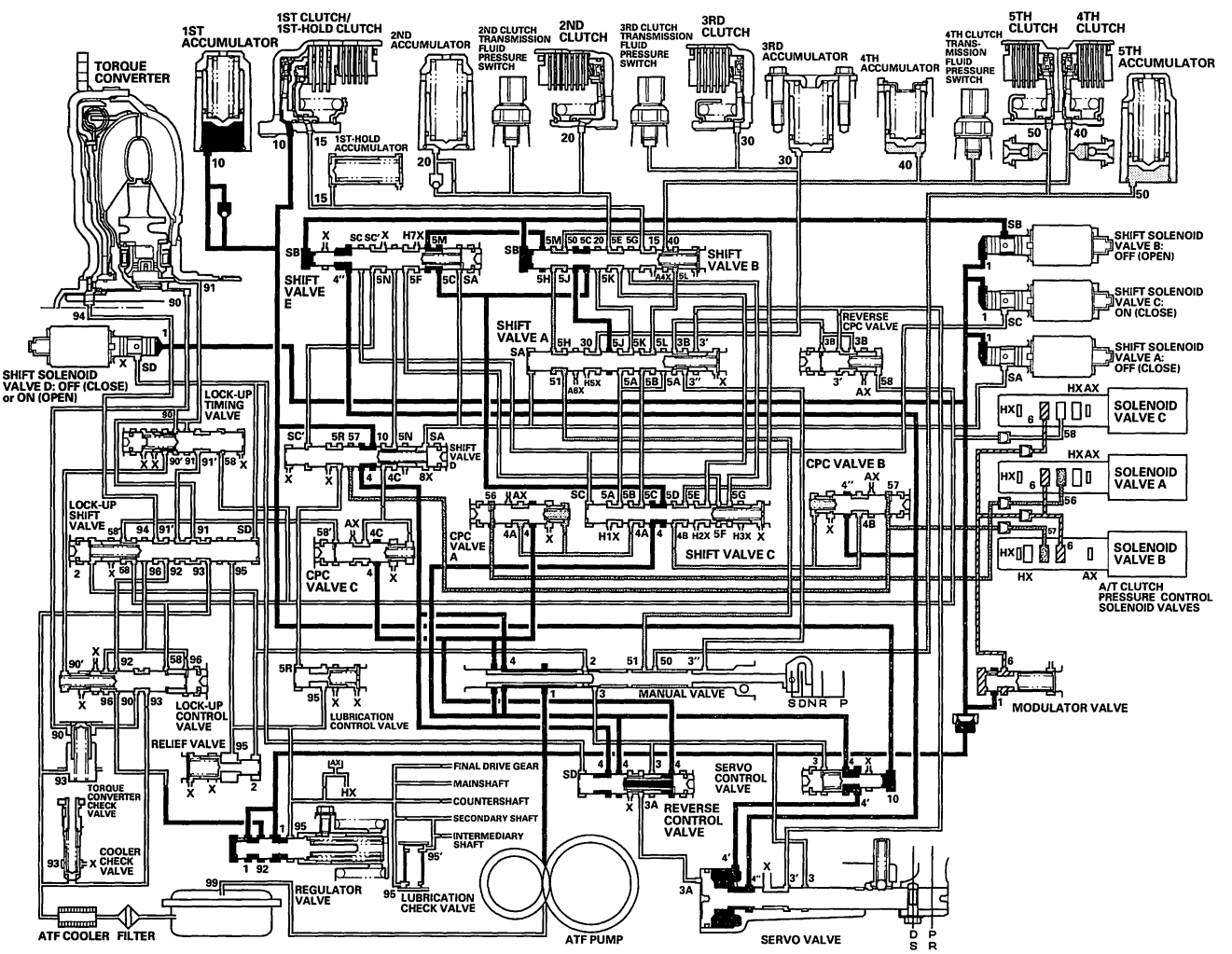




BACK

Protected by AR

**D Position: Driving in 5th gear**

The PCM turns shift solenoid valve B ON, and shift solenoid valve B covers the port of shift solenoid valve B pressure (SB) to shift valve B. Shift solenoid valve A remains OFF, and shift solenoid valve C remains ON. Shift valve B is moved to the left side to switch the port of line pressure (5H), CPC B pressure (5D) leading to the 5th clutch, and 4th clutch pressure (40) releasing 4th clutch pressure. CPC B pressure (5H) changes to line pressure (5H) and 5th clutch pressure (51) (50) is changed to line pressure mode, and the 5th clutch is engaged in the line pressure mode. The 1st clutch is also engaged, but no power is transmitted because of the one-way clutch.

NOTE: When used, "left" or "right" indicates direction on the hydraulic circuit.

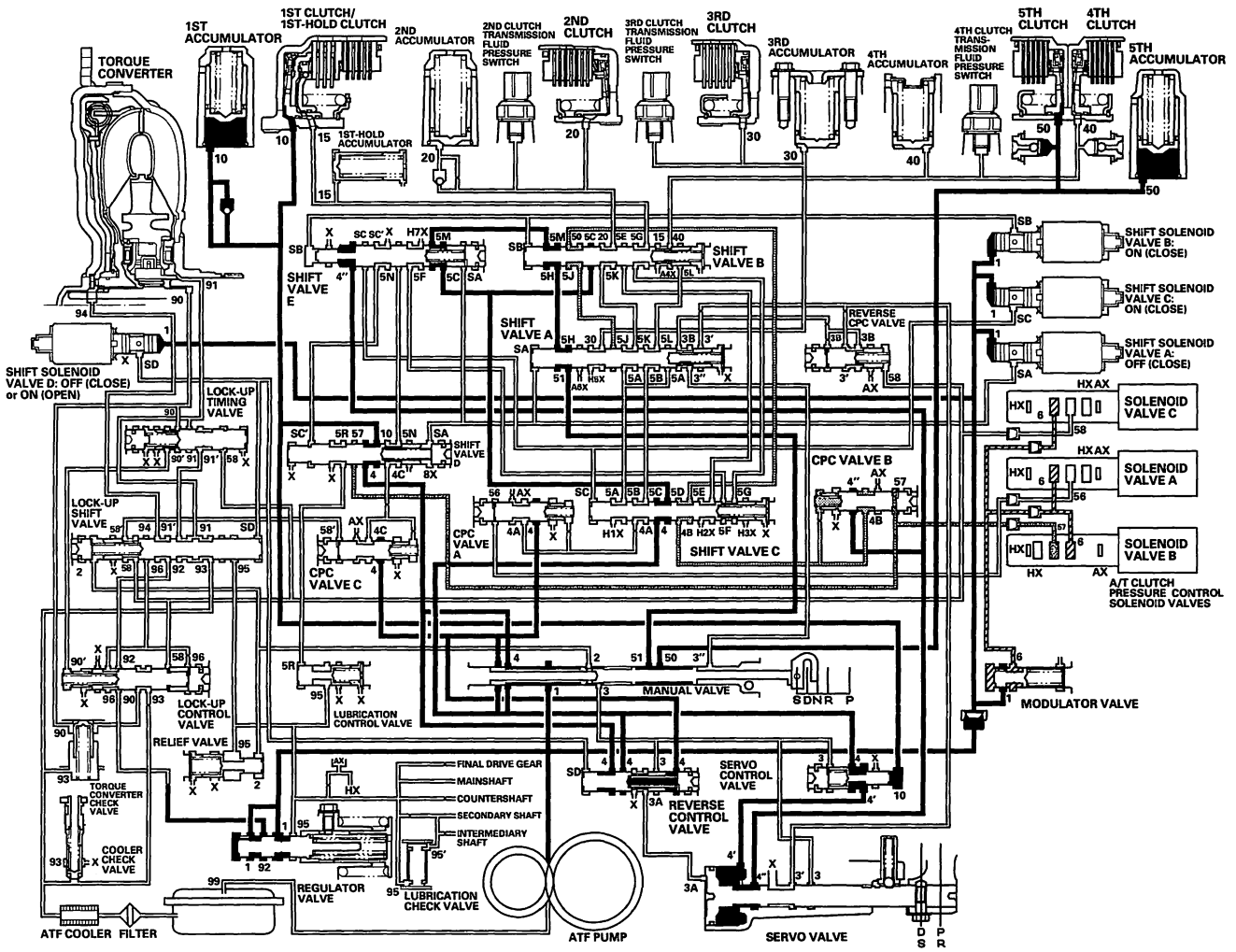


(cont'd)

Protected by AR



## System Description (cont'd)

### Hydraulic Flow (cont'd)

**Driving in 1st gear (engaged with 1st and 1st-hold clutches) in the sequential sportshift mode, and the D-paddle shift mode**

Line pressure (1) regulated by the regulator valve flows to shift solenoid valves. The PCM controls the shift solenoid valves ON and OFF. The conditions of the shift solenoid valves and the positions of the shift valves are as follows:

- Shift solenoid valve A is OFF, and closes the port of shift solenoid valve A pressure (SA); shift valve A stays on the left side.
- Shift solenoid valve B is turned ON, and closes the port of shift solenoid valve B pressure (SB); shift valve B and shift valve E stay on the left side.
- Shift solenoid valve C is turned ON, and closes the port of shift solenoid valve C pressure (SC); shift valve C and shift valve D stay on the left side.
- Shift solenoid valve D is OFF, and closes the port of shift solenoid valve D pressure (SD).

Line pressure (4) becomes 1st clutch pressure (10) at shift valve D, and flows to the 1st clutch. The 1st clutch is engaged. The PCM controls A/T clutch pressure control solenoid valve C, and A/T clutch pressure control solenoid valve C pressure (58) is applied to CPC valve C via the lock-up shift valve. CPC valve C regulates line pressure (4), and line pressure (4) becomes CPC C pressure (4C). CPC C pressure (4C) flows to shift valve B via shift valves D, E, and C, and becomes 1st-hold clutch pressure (15) at shift valve B. 1st-hold clutch pressure (15) is applied to the 1st-hold clutch, and the 1st-hold clutch is engaged.

NOTE: When used, "left" or "right" indicates direction on the hydraulic circuit.

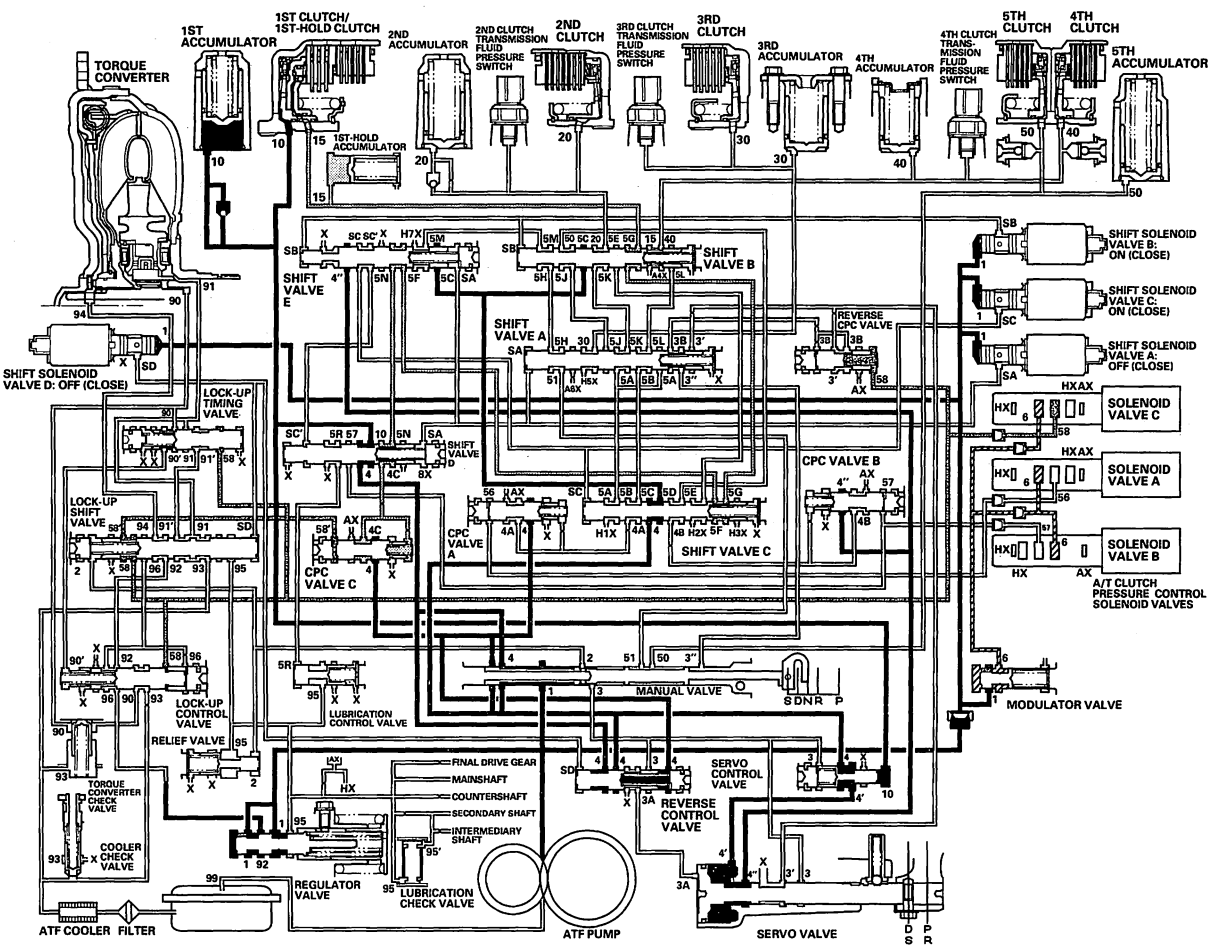




BACK

Protected by AR

**R Position: Shifting to the R position from the P or N position**

The PCM controls the shift solenoid valves ON and OFF. The conditions of the shift solenoid valves and the positions of the shift valves are as follows:

- Shift solenoid valve A is OFF, and closes the port of shift solenoid valve A pressure (SA); shift valve A stays on the left side.
- Shift solenoid valve B is turned ON, and closes the port of shift solenoid valve B pressure (SB); shift valve B and shift valve E stay on the left side.
- Shift solenoid valve C is OFF, and opens the port of shift solenoid valve C pressure (SC); shift valve C and shift valve D move to the right side.
- Shift solenoid valve D is turned ON, and opens the port of shift solenoid valve D pressure (SD); reverse control valve moves to the right side.

The manual valve is moved to the R position, and line pressure (1) becomes line pressure (3) at the manual valve. Line pressure (3) passes through the reverse control valve, and becomes line pressure (3A), then flows to the servo valve. Line pressure (3A) pushes the servo valve to the reverse position. Line pressure (3) also flows to the reverse CPC valve, and becomes reverse CPC pressure (3B) (3''). Reverse CPC pressure (3'') becomes 5th clutch pressure (50) at the manual valve, and 5th clutch pressure (50) flows to the 5th clutch. The 5th clutch is engaged with reverse CPC pressure mode.

NOTE: When used, "left" or "right" indicates direction on the hydraulic circuit.

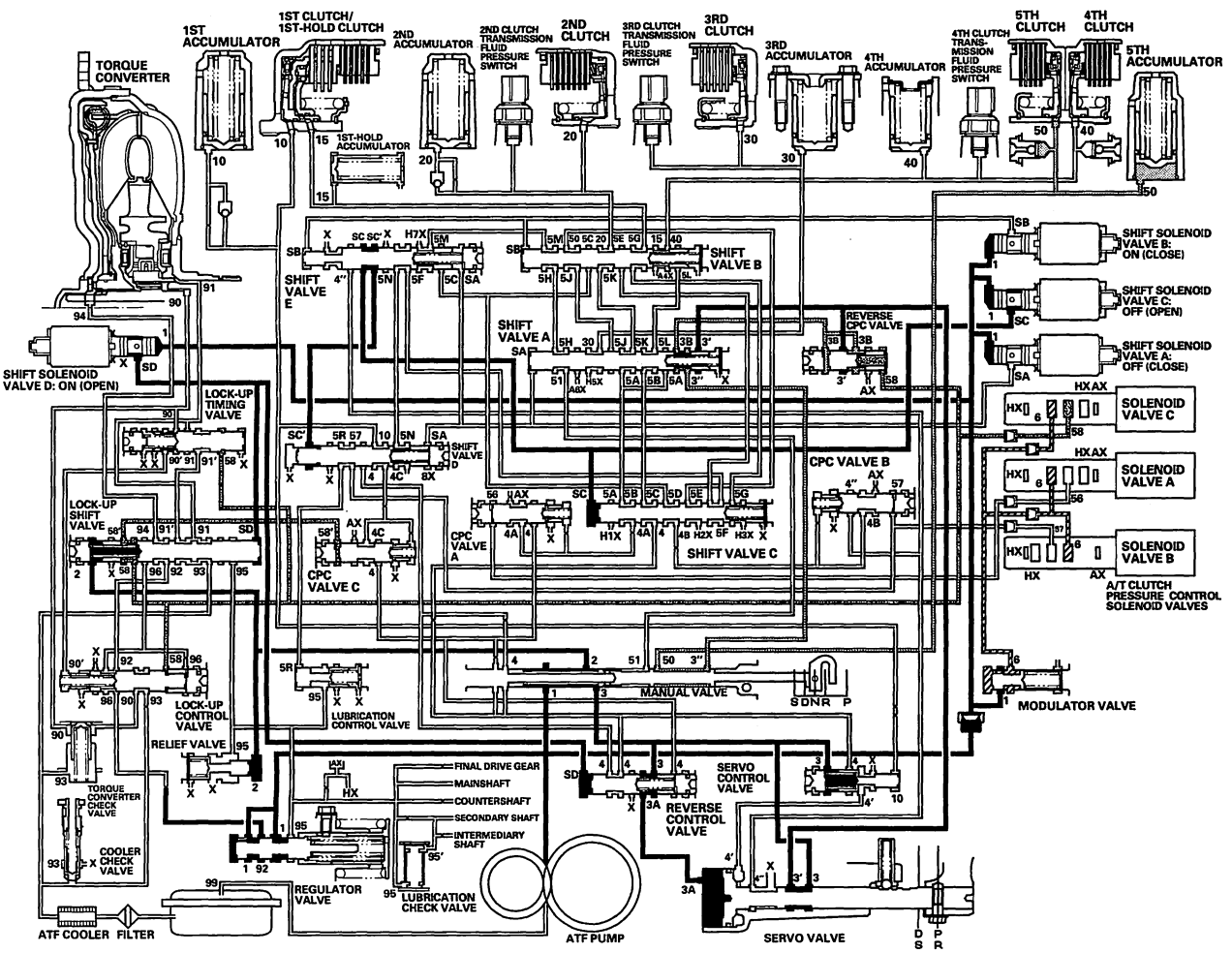


(cont'd)

Protected by AR



## System Description (cont'd)

### Hydraulic Flow (cont'd)

**R Position: Driving in reverse gear**
As the speed of the vehicle reaches the programmed value, the PCM turns shift solenoid valve A ON, and shift solenoid valve A uncovers the port of shift solenoid valve A pressure (SA) to shift valve A. Shift valve A is moved to the right side to switch the port of line pressure (3') and reverse CPC pressure (3B) leading to the 5th clutch. Line pressure (3) flows to the manual valve via the servo valve and shift valve A, and becomes 5th clutch pressure (50) at the manual valve. The 5th clutch pressure (50) flows to the 5th clutch, and the 5th clutch is engaged with the line pressure mode.

**Reverse Inhibitor Control**
When the R position is selected while the vehicle is moving forward at a speed over 6 mph (10 km/h), the PCM commands shift solenoid valve D to remain OFF so that shift solenoid valve D pressure (SD) is not applied to the reverse control valve. Line pressure (3) stops at the reverse control valve, and is not applied to the servo valve. No power is transmitted to the reverse direction.

NOTE: When used, "left" or "right" indicates direction on the hydraulic circuit.

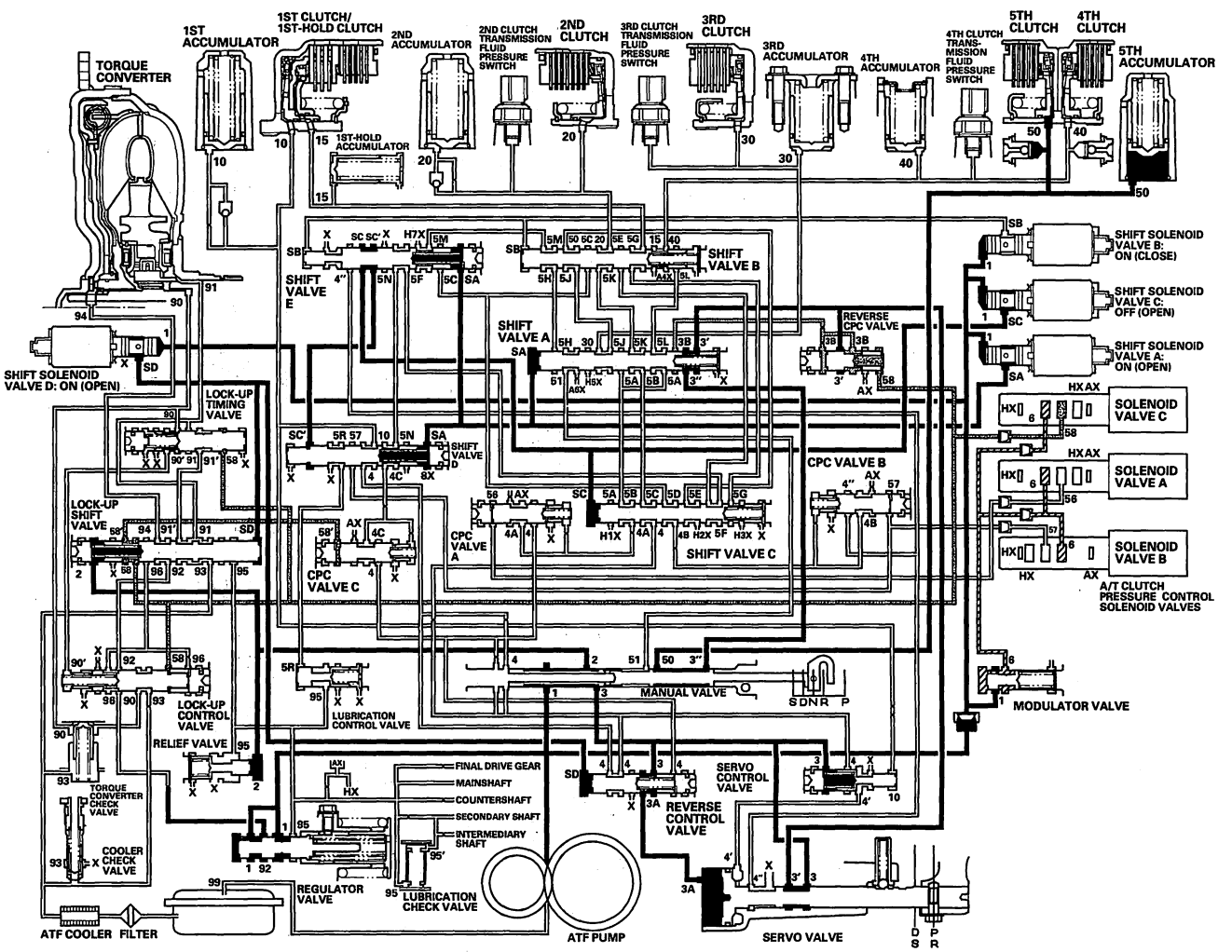




BACK

Protected by AR

**P Position**

The PCM controls the shift solenoid valves ON and OFF. The conditions of the shift solenoid valves and the positions of the shift valves are as follows:

- Shift solenoid valve A is OFF, and closes the port of shift solenoid valve A pressure (SA); shift valve A stays on the left side.
- Shift solenoid valve B is turned ON, and closes the port of shift solenoid valve B pressure (SB); shift valve B and shift valve E stay on the left side.
- Shift solenoid valve C is OFF, and opens the port of shift solenoid valve C pressure (SC); shift valve C and shift valve D move to the right side.
- Shift solenoid valve D is turned ON, and opens the port of shift solenoid valve D pressure (SD); reverse control valve moves to the right side.

The manual valve is moved to the P position, and line pressure (1) becomes line pressure (3) at the manual valve. Line pressure (3) passes through the reverse control valve, and becomes line pressure (3A), then flows to the servo valve. Line pressure (3A) pushes the servo valve to the reverse position. Line pressure (3) flows to the manual valve via the reverse CPC valve and shift valve A, and stops at the manual valve. Hydraulic pressure is not applied the clutches.

NOTE: When used, "left" or "right" indicates direction on the hydraulic circuit.

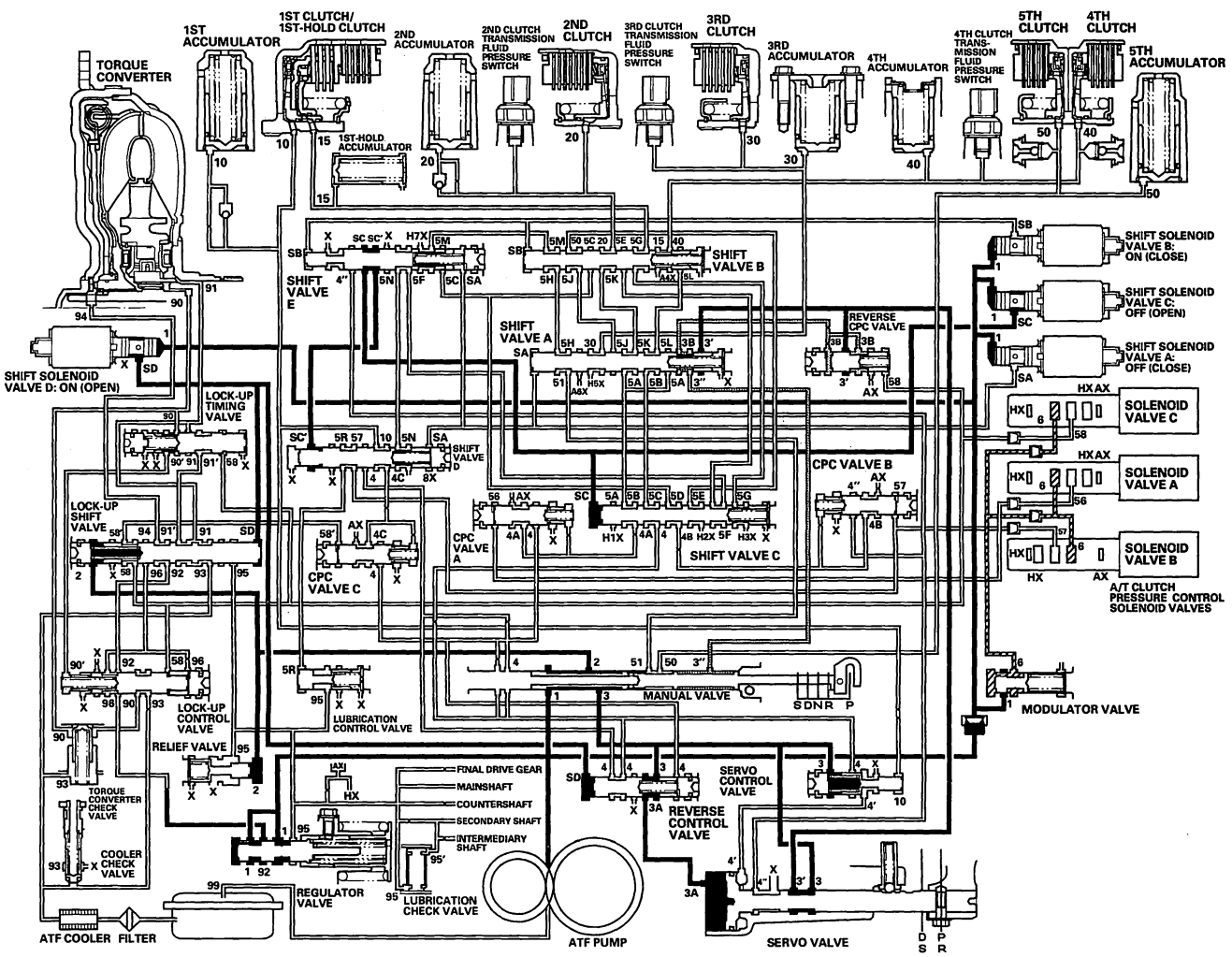

Protected by AR



## System Description (cont'd)

### Lock-up System

The lock-up mechanism of the torque converter clutch operates in 2nd, 3rd, 4th, and 5th gears in the D position, and 2nd, 3rd, and 4th gears in the S position. The pressurized fluid is drained from the back of the torque converter through a fluid passage, causing the torque converter clutch piston to be held against the torque converter cover. As this takes place, the mainshaft rotates at the same speed as the engine crankshaft. Together with the hydraulic control, the PCM optimizes the timing and amount of the lock-up mechanism. When shift solenoid valve D is turned on by the PCM, shift solenoid valve D pressure switches the lock-up shift valve lock-up on and off. A/T clutch pressure control solenoid valve C, the lock-up control valve, and lock-up timing valve control the amount of lock-up.

**Torque Converter Clutch Lock-up ON (Engaging Torque Converter Clutch)**
Fluid in the chamber between the torque converter cover and the torque converter clutch piston is drained off, and fluid entering from the chamber between the pump and stator exerts pressure through the torque converter clutch piston against the torque converter cover. The torque converter clutch piston engages with the torque converter cover; torque converter clutch lock-up ON, and the mainshaft rotates at the same as the engine.

**Power flow**

**The power flows by way of:**

**Engine**
↓
**Drive plate**
↓
**Torque converter cover**
↓
**Torque converter clutch piston**
↓
**Damper spring**
↓
**Turbine**
↓
**Mainshaft**

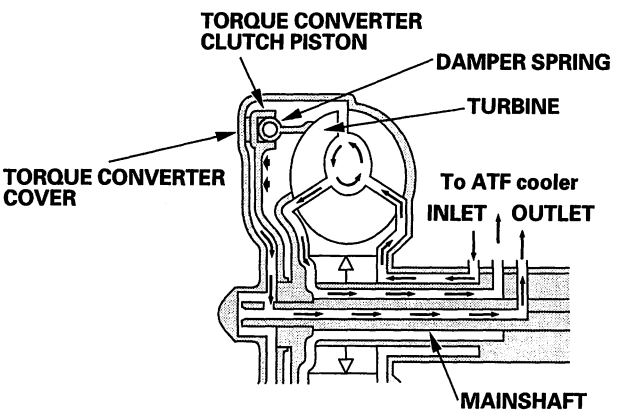


**Torque Converter Clutch Lock-up OFF (Disengaging Torque Converter Clutch)**
Fluid entered from the chamber between the torque converter cover and the torque converter clutch piston passes through the torque converter and goes out from the chambers between the turbine and the stator, and between the pump and the stator. As a result, the torque converter clutch piston moves away from the torque converter cover, and the torque converter clutch lock-up is released; torque converter clutch lock-up OFF.

**Power flow**

**The power flows by way of:**

**Engine**
↓
**Drive plate**
↓
**Torque converter cover**
↓
**Pump**
↓
**Turbine**
↓
**Mainshaft**

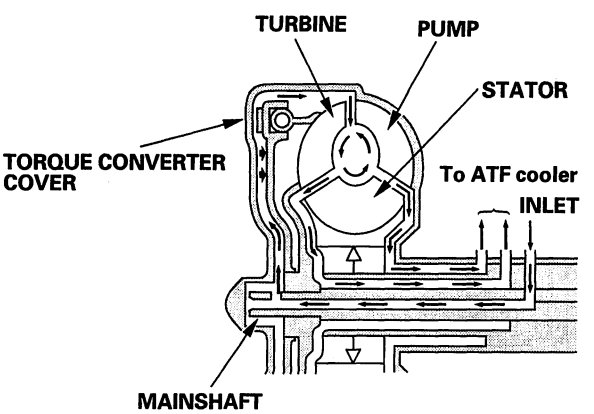




BACK

Protected by AR

**No Lock-up**

The PCM commands shift solenoid valve D to remain OFF, and shift solenoid valve D covers the port of shift solenoid valve D pressure (SD) to the lock-up shift valve. The lock-up shift valve is in the right side, and uncovers the port leading torque converter pressure (92) to the left side of the torque converter. Torque converter pressure (92) from regulator valve becomes torque converter pressure (94) at the lock-up shift valve, and enters into the left side of the torque converter to disengage the torque converter clutch. The torque converter clutch is OFF.

NOTE: When used, "left" or "right" indicates direction on the hydraulic circuit.

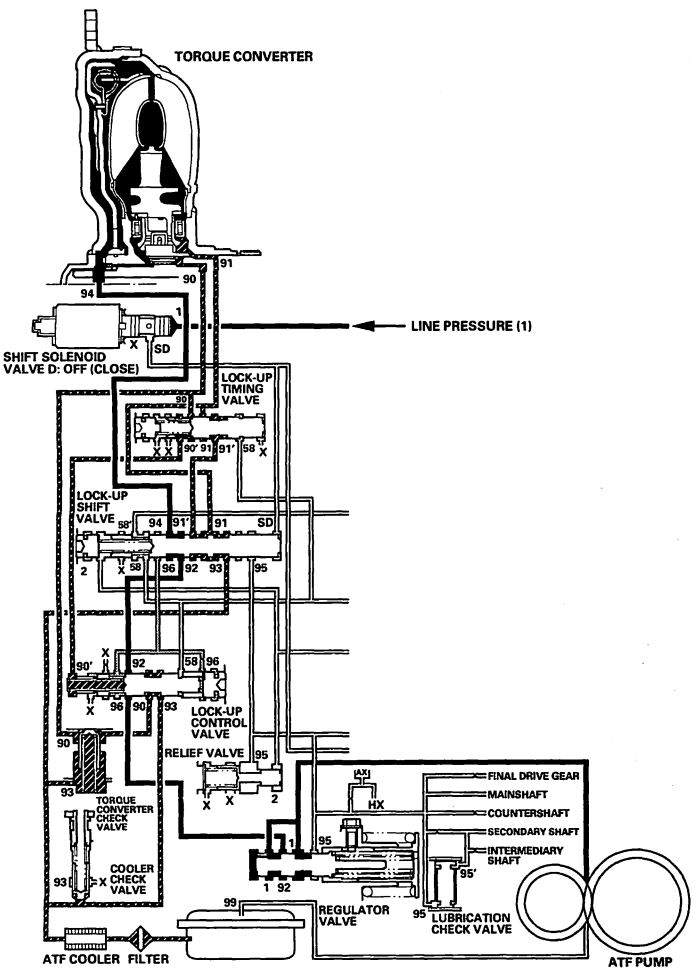


(cont'd)

Protected by AR



## System Description (cont'd)

### Lock-up System (cont'd)

**Partial Lock-up**

As the speed of the vehicle reaches the programmed value, the PCM turns shift solenoid valve D ON, and shift solenoid valve D uncovers the port of shift solenoid valve D pressure (SD) to the lock-up shift valve. The lock-up shift valve is moved to the left side to uncover the port of torque converter pressure (91) leading to the right side of the torque converter to engage the torque converter clutch. The PCM also controls A/T clutch pressure control solenoid valve C, and A/T clutch pressure control solenoid valve C pressure (58) is applied to the lock-up control valve and lock-up timing valve. When A/T clutch pressure control solenoid valve C pressure (58) is low, torque converter pressure (91) from the lock-up timing valve is low. The torque converter clutch is engaged partially. A/T clutch pressure control solenoid valve C pressure (58) increases, and the lock-up timing valve is moved to the left side to uncover the port leading torque converter pressure to high. Under this condition, the torque converter clutch is engaged by pressure from the right side of the torque converter; this condition is partial lock-up.

NOTE: When used, "left" or "right" indicates direction on the hydraulic circuit.

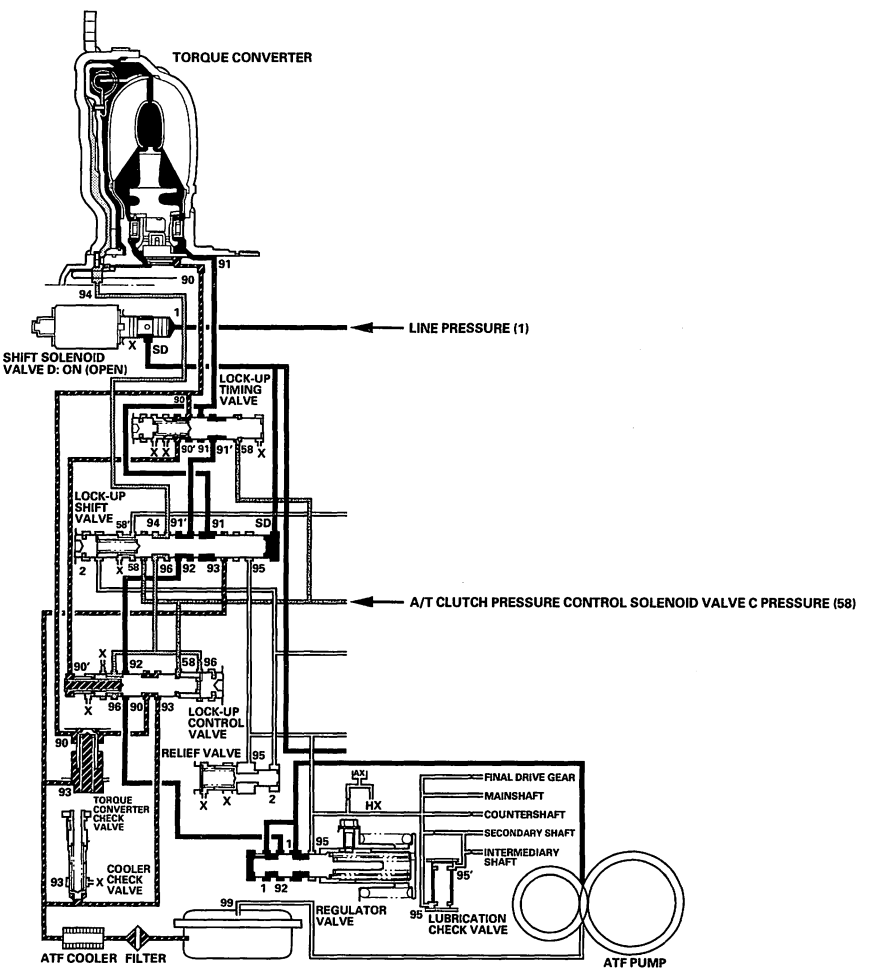




BACK

Protected by AR

**Full Lock-up**

When the vehicle speed further increases, the PCM controls A/T clutch pressure control solenoid valve C to increase A/T clutch pressure control solenoid valve C pressure (58). A/T clutch pressure control solenoid valve C pressure (58) is applied to the lock-up control valve and lock-up timing valve, and the lock-up control valve and lock-up timing valve are moved to the left side. Torque converter pressure (94) from the left side of the torque converter releases at the lock-up control valve, and lock-up timing valve uncovers the port of torque converter pressure (91) leading to the right side of the torque converter. Torque converter back pressure is released fully, and torque converter clutch is engaged fully.

NOTE: When used, "left" or "right" indicates direction on the hydraulic circuit.

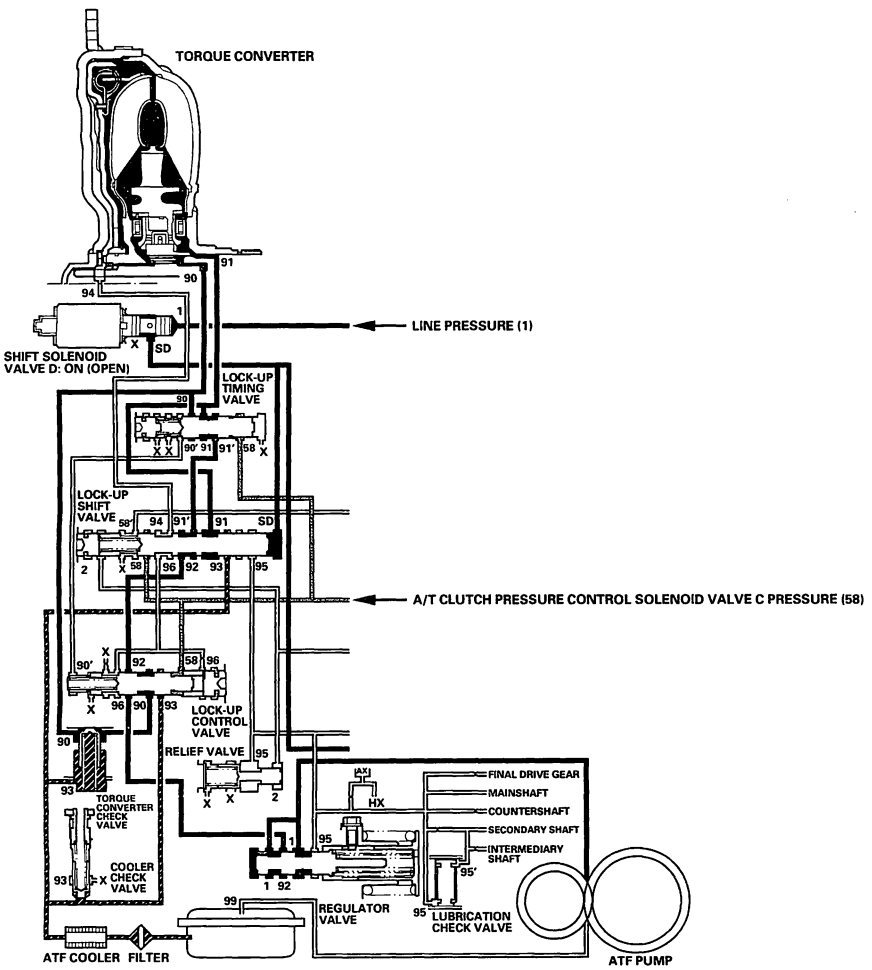

Protected by AR



## System Description (cont'd)

### Circuit Diagram - PCM A/T Control System

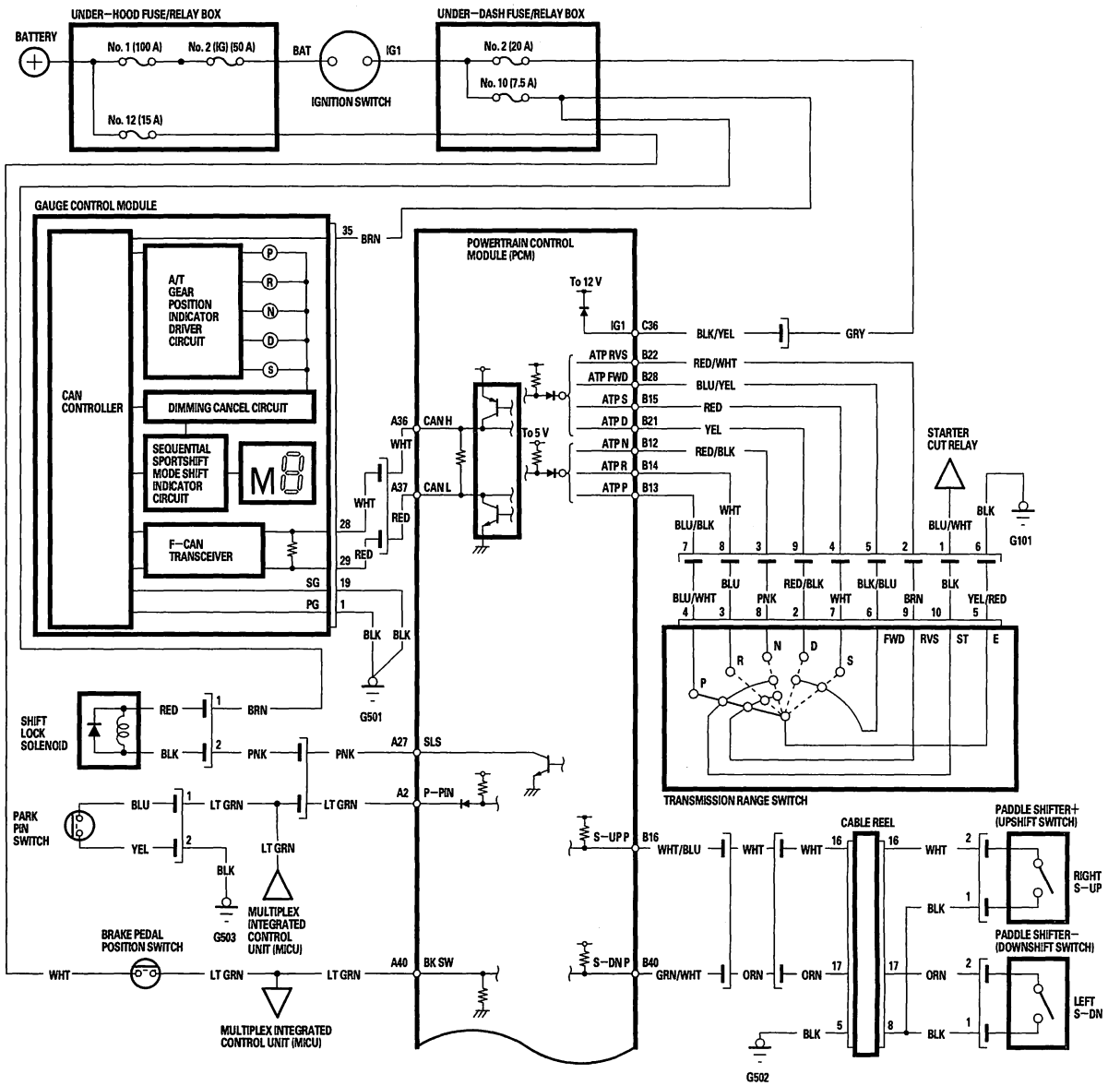




BACK

Protected by AR

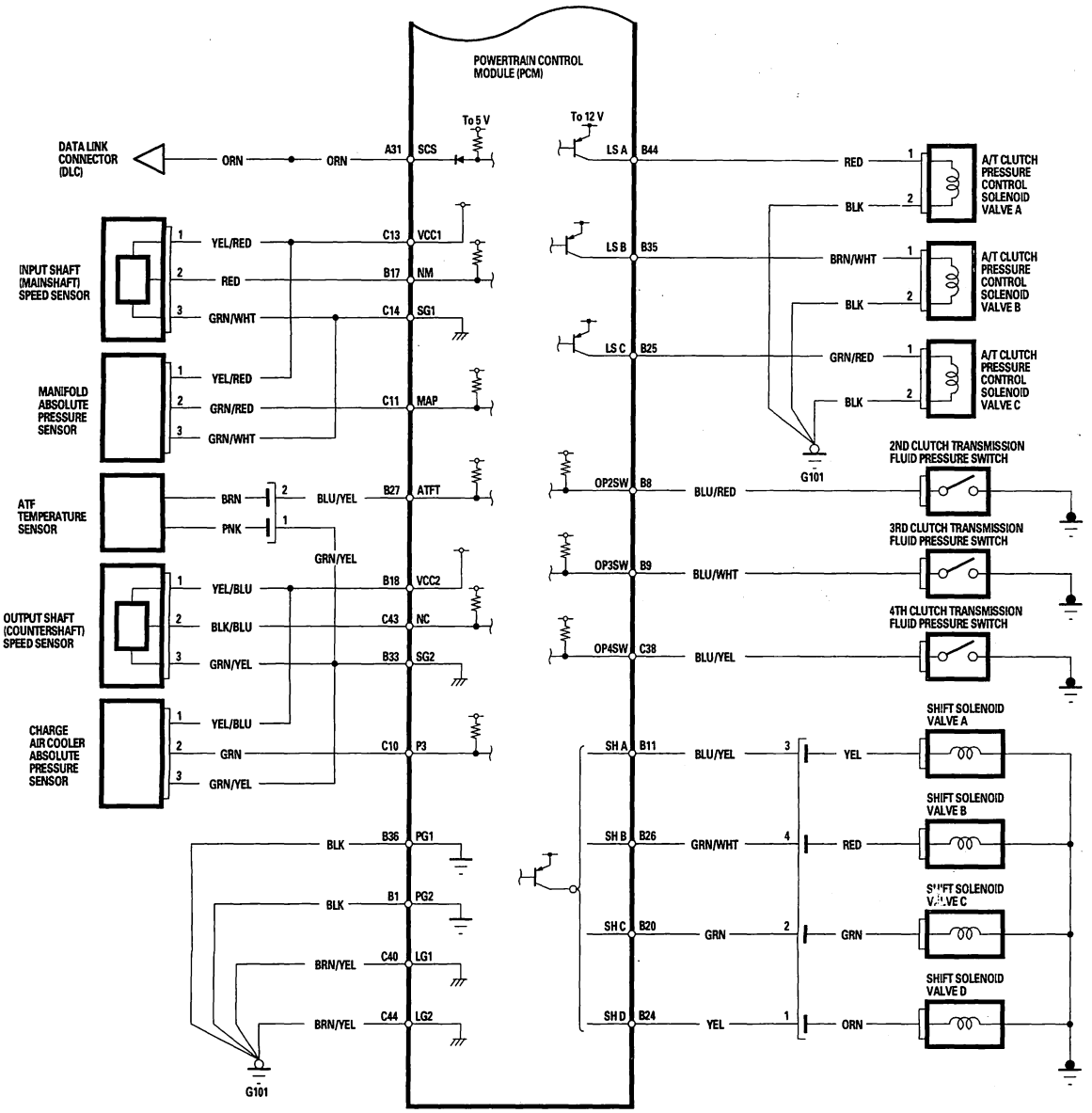


PCM Harness Connector Terminal Locations

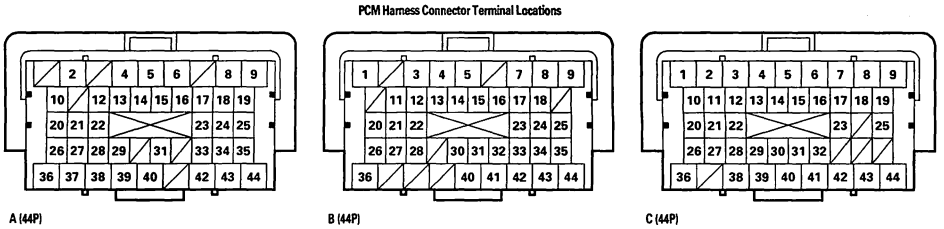

A (44P) B (44P) C (44P)

Terminal side of female terminals

Protected by AR



## DTC Troubleshooting

### **DTC P0107:** Manifold Absolute Pressure (MAP) Sensor Circuit Low Voltage Input

NOTE: Before you troubleshoot, record all freeze data and any on-board snapshot, and review General Troubleshooting Information (see page 14-4).

1. Clear the DTC with the HDS.

2. Turn the ignition switch OFF, then turn it ON (II) again.

3. Check whether DTC P0107 is indicated in the DTCs/ Freeze Data in PGM-FI Mode Menu with the HDS.

   *Is DTC P0107 indicated in the PGM-FI system?*

   **YES**—Troubleshoot for DTC P0107 in the PGM-FI System (see page 11-94).■

   **NO**—Go to step 4.

4. Check whether DTC P0107 is indicated in the DTCs/ Freeze Data in A/T Mode Menu with the HDS.

   *Is DTC P0107 indicated?*

   **YES**—Go to step 5.

   **NO**—Intermittent failure, the system is OK at this time.■

5. Update the A/T software in the PCM if it does not have the latest software (see page 14-8), or substitute a known-good PCM (see page 14-10).

6. Turn the ignition switch OFF, then turn it ON (II).

7. Check for DTC(s) in the DTCs/Freeze Data in A/T Mode Menu with the HDS.

   *Is DTC P0107 indicated?*

   **YES**—Check for poor connections and loose terminals at the MAP sensor and the PCM. If the PCM was updated, substitute a known-good PCM (see page 14-10), then recheck. If the PCM was substituted, go to step 1.

   **NO**—Go to step 8.

8. Monitor the OBD status for P0107 in the DTCs/ Freeze Data in A/T Mode Menu for a pass/fail.

   *Does the result indicate PASSED?*

   **YES**—If the PCM was updated, troubleshooting is complete. If the PCM was substituted, replace the original PCM (see page 11-252). If any other DTCs were indicated on step 7, go to the indicated DTC's troubleshooting.■

   **NO**—If the HDS indicates FAILED, check for poor connections and loose terminals at the MAP sensor and the PCM. If the PCM was updated, substitute a known-good PCM (see page 14-10), then recheck. If the PCM was substituted, go to step 1. If the HDS indicates NOT COMPLETED, keep idling until a result comes on.



BACK

Protected by AR

## **DTC P0108:** Manifold Absolute Pressure (MAP) Sensor Circuit High Voltage Input

NOTE: Before you troubleshoot, record all freeze data and any on-board snapshot, and review General Troubleshooting Information (see page 14-4).

1. Clear the DTC with the HDS.

2. Turn the ignition switch OFF, then turn it ON (II) again.

3. Check whether DTC P0108 is indicated in the DTCs/ Freeze Data in PGM-FI Mode Menu with the HDS.

   *Is DTC P0108 indicated in the PGM-FI system?*

   **YES**—Troubleshoot for DTC P0108 in the PGM-FI System (see page 11-96).■

   **NO**—Go to step 4.

4. Check whether DTC P0108 is indicated in the DTCs/ Freeze Data in A/T Mode Menu with the HDS.

   *Is DTC P0108 indicated?*

   **YES**—Go to step 5.

   **NO**—Intermittent failure, the system is OK at this time.■

5. Update the A/T software in the PCM if it does not have the latest software (see page 14-8), or substitute a known-good PCM (see page 14-10).

6. Turn the ignition switch OFF, then turn it ON (II).

7. Check for DTC(s) in the DTCs/Freeze Data in A/T Mode Menu with the HDS.

   *Is DTC P0108 indicated?*

   **YES**—Check for poor connections and loose terminals at the MAP sensor and the PCM. If the PCM was updated, substitute a known-good PCM (see page 14-10), then recheck. If the PCM was substituted, go to step 1.

   **NO**—Go to step 8.

8. Monitor the OBD status for P0108 in the DTCs/ Freeze Data in A/T Mode Menu for a pass/fail.

   *Does the result indicate PASSED?*

   **YES**—If the PCM was updated, troubleshooting is complete. If the PCM was substituted, replace the original PCM (see page 11-252). If any other DTCs were indicated on step 7, go to the indicated DTC's troubleshooting.■

   **NO**—If the HDS indicates FAILED, check for poor connections and loose terminals at the MAP sensor and the PCM. If the PCM was updated, substitute a known-good PCM (see page 14-10), then recheck. If the PCM was substituted, go to step 1. If the HDS indicates NOT COMPLETED, keep idling until a result comes on.

Protected by AR



## DTC Troubleshooting (cont'd)

### DTC P0335: Crankshaft Position (CKP) Sensor A No signal

NOTE: Before you troubleshoot, record all freeze data and any on-board snapshot, and review General Troubleshooting Information (see page 14-4).

1. Clear the DTC with the HDS.

2. Start the engine.

3. Check whether DTC P0335 is indicated in the DTCs/ Freeze Data in PGM-FI Mode Menu with the HDS.

   *Is DTC P0335 indicated in the PGM-FI system?*

   **YES**—Troubleshoot for DTC P0335 in the PGM-FI System (see page 11-146).■

   **NO**—Go to step 4.

4. Check whether DTC P0335 is indicated in the DTCs/ Freeze Data in A/T Mode Menu with the HDS.

   *Is DTC P0335 indicated?*

   **YES**—Go to step 5.

   **NO**—Intermittent failure, the system is OK at this time.■

5. Update the A/T software in the PCM if it does not have the latest software (see page 14-8), or substitute a known-good PCM (see page 14-10).

6. Start the engine.

7. Check for DTC(s) in the DTCs/Freeze Data in A/T Mode Menu with the HDS.

   *Is DTC P0335 indicated?*

   **YES**—Check for poor connections and loose terminals at the CKP sensor and the PCM. If the PCM was updated, substitute a known-good PCM (see page 14-10), then recheck. If the PCM was substituted, go to step 1.

   **NO**—Go to step 8.

8. Monitor the OBD status for P0335 in the DTCs/ Freeze Data in A/T Mode Menu for a pass/fail.

   *Does the result indicate PASSED?*

   **YES**—If the PCM was updated, troubleshooting is complete. If the PCM was substituted, replace the original PCM (see page 11-252). If any other DTCs were indicated on step 7, go to the indicated DTC's troubleshooting.■

   **NO**—If the HDS indicates FAILED, check for poor connections and loose terminals at the CKP sensor and the PCM. If the PCM was updated, substitute a known-good PCM (see page 14-10), then recheck. If the PCM was substituted, go to step 1. If the HDS indicates NOT COMPLETED, keep idling until a result comes on.



BACK

Protected by AR

## **DTC P0339:** Crankshaft Position (CKP) Sensor A Intermittent Interruption

NOTE: Before you troubleshoot, record all freeze data and any on-board snapshot, and review General Troubleshooting Information (see page 14-4).

1. Clear the DTC with the HDS.

2. Start the engine, and let it idle for 10 seconds.

3. Check whether DTC P0339 is indicated in the DTCs/ Freeze Data in PGM-FI Mode Menu with the HDS.

   *Is DTC P0339 indicated in the PGM-FI system?*

   **YES**—Troubleshoot for DTC P0339 in the PGM-FI System (see page 11-149).■

   **NO**—Go to step 4.

4. Check whether DTC P0339 is indicated in the DTCs/ Freeze Data in A/T Mode Menu with the HDS.

   *Is DTC P0339 indicated?*

   **YES**—Go to step 5.

   **NO**—Intermittent failure, the system is OK at this time.■

5. Update the A/T software in the PCM if it does not have the latest software (see page 14-8), or substitute a known-good PCM (see page 14-10).

6. Start the engine, and let it idle for 10 seconds.

7. Check for DTC(s) in the DTCs/Freeze Data in A/T Mode Menu with the HDS.

   *Is DTC P0339 indicated?*

   **YES**—Check for poor connections and loose terminals at the CKP sensor and the PCM. If the PCM was updated, substitute a known-good PCM (see page 14-10), then recheck. If the PCM was substituted, go to step 1.

   **NO**—Go to step 8.

8. Monitor the OBD status for P0339 in the DTCs/ Freeze Data in A/T Mode Menu for a pass/fail.

   *Does the result indicate PASSED?*

   **YES**—If the PCM was updated, troubleshooting is complete. If the PCM was substituted, replace the original PCM (see page 11-252). If any other DTCs were indicated on step 7, go to the indicated DTC's troubleshooting.■

   **NO**—If the HDS indicates FAILED, check for poor connections and loose terminals at the CKP sensor and the PCM. If the PCM was updated, substitute a known-good PCM (see page 14-10), then recheck. If the PCM was substituted, go to step 1. If the HDS indicates NOT COMPLETED, keep idling until a result comes on.

Protected by AR



## DTC Troubleshooting (cont'd)

### DTC P0365: Camshaft Position (CMP) Sensor B No signal

NOTE: Before you troubleshoot, record all freeze data and any on-board snapshot, and review General Troubleshooting Information (see page 14-4).

1. Clear the DTC with the HDS.

2. Start the engine.

3. Check whether DTC P0365 is indicated in the DTCs/ Freeze Data in PGM-FI Mode Menu with the HDS.

   *Is DTC P0365 indicated in the PGM-FI system?*

   **YES**—Troubleshoot for DTC P0365 in the PGM-FI System (see page 11-150).■

   **NO**—Go to step 4.

4. Check whether DTC P0365 is indicated in the DTCs/ Freeze Data in A/T Mode Menu with the HDS.

   *Is DTC P0365 indicated?*

   **YES**—Go to step 5.

   **NO**—Intermittent failure, the system is OK at this time.■

5. Update the A/T software in the PCM if it does not have the latest software (see page 14-8), or substitute a known-good PCM (see page 14-10).

6. Start the engine.

7. Check for DTC(s) in the DTCs/Freeze Data in A/T Mode Menu with the HDS.

   *Is DTC P0365 indicated?*

   **YES**—Check for poor connections and loose terminals at the CMP sensor and the PCM. If the PCM was updated, substitute a known-good PCM (see page 14-10), then recheck. If the PCM was substituted, go to step 1.

   **NO**—Go to step 8.

8. Monitor the OBD status for P0365 in the DTCs/ Freeze Data in A/T Mode Menu for a pass/fail.

   *Does the result indicate PASSED?*

   **YES**—If the PCM was updated, troubleshooting is complete. If the PCM was substituted, replace the original PCM (see page 11-252). If any other DTCs were indicated on step 7, go to the indicated DTC's troubleshooting.■

   **NO**—If the HDS indicates FAILED, check for poor connections and loose terminals at the CMP sensor and the PCM. If the PCM was updated, substitute a known-good PCM (see page 14-10), then recheck. If the PCM was substituted, go to step 1. If the HDS indicates NOT COMPLETED, keep idling until a result comes on.



BACK

Protected by AR

## **DTC P0369:** Camshaft Position (CMP) Sensor B Intermittent Interruption

NOTE: Before you troubleshoot, record all freeze data and any on-board snapshot, and review General Troubleshooting Information (see page 14-4).

1. Clear the DTC with the HDS.

2. Start the engine, and let it idle for 10 seconds.

3. Check whether DTC P0369 is indicated in the DTCs/ Freeze Data in PGM-FI Mode Menu with the HDS.

   *Is DTC P0369 indicated in the PGM-FI system?*

   **YES**—Troubleshoot for DTC P0369 in the PGM-FI System (see page 11-153).■

   **NO**—Go to step 4.

4. Check whether DTC P0369 is indicated in the DTCs/ Freeze Data in A/T Mode Menu with the HDS.

   *Is DTC P0369 indicated?*

   **YES**—Go to step 5.

   **NO**—Intermittent failure, the system is OK at this time.■

5. Update the A/T software in the PCM if it does not have the latest software (see page 14-8), or substitute a known-good PCM (see page 14-10).

6. Start the engine, and let it idle for 10 seconds.

7. Check for DTC(s) in the DTCs/Freeze Data in A/T Mode Menu with the HDS.

   *Is DTC P0369 indicated?*

   **YES**—Check for poor connections and loose terminals at the CMP sensor and the PCM. If the PCM was updated, substitute a known-good PCM (see page 14-10), then recheck. If the PCM was substituted, go to step 1.

   **NO**—Go to step 8.

8. Monitor the OBD status for P0369 in the DTCs/ Freeze Data in A/T Mode Menu for a pass/fail.

   *Does the result indicate PASSED?*

   **YES**—If the PCM was updated, troubleshooting is complete. If the PCM was substituted, replace the original PCM (see page 11-252). If any other DTCs were indicated on step 7, go to the indicated DTC's troubleshooting.■

   **NO**—If the HDS indicates FAILED, check for poor connections and loose terminals at the CMP sensor and the PCM. If the PCM was updated, substitute a known-good PCM (see page 14-10), then recheck. If the PCM was substituted, go to step 1. If the HDS indicates NOT COMPLETED, keep idling until a result comes on.

Protected by AR



## DTC Troubleshooting (cont'd)

### DTC P0705: Short in Transmission Range Switch Circuit (Multiple Shift-position Input)

NOTE:
- Before you troubleshoot, record all freeze data and any on-board snapshot, and review General Troubleshooting Information (see page 14-4).
- This code is caused by an electrical circuit problem and cannot be caused by a mechanical problem in the transmission.

1. Clear the DTC with the HDS.

2. Start the engine.

3. With the brake pedal pressed, move the shift lever through all positions. Stop for at least 1 second in each position, and monitor the OBD status for P0705 in the DTCs/Freeze Data in A/T Mode Menu for a pass/fail.

   *Does the result indicate FAILED?*

   **YES**—Go to step 4.

   **NO**—Intermittent failure, the system is OK at this time. Check for an intermittent short in the wire between the transmission range switch and the PCM. If the HDS indicates NOT COMPLETED, return to step 2 and recheck.

4. Turn the ignition switch OFF.

5. Disconnect the transmission range switch subharness connector.

6. Turn the ignition switch ON (II).

7. Verify the ATP P, ATP R, ATP N, ATP D, ATP S, ATP FWD, and ATP RVS inputs with the HDS in the A/T data list.

   *Do any of the inputs indicate ON?*

   **YES**—Repair short in the circuit that indicates ON:

   - ATP P circuit: between PCM connector terminal B13 and transmission range switch subharness connector terminal No. 7.
   - ATP R circuit: between PCM connector terminal B14 and transmission range switch subharness connector terminal No. 8.
   - ATP N circuit: between PCM connector terminal B12 and transmission range switch subharness connector terminal No. 3.
   - ATP D circuit: between PCM connector terminal B21 and transmission range switch subharness connector terminal No. 9.
   - ATP S circuit: between PCM connector terminal B15 and transmission range switch subharness connector terminal No. 4.
   - ATP FWD circuit: between PCM connector terminal B28 and transmission range switch subharness connector terminal No. 5.
   - ATP RVS circuit: between PCM connector terminal B22 and transmission range switch subharness connector terminal No. 2.

   Go to step 8 after repairing the circuit.

   **NO**—Check the transmission range switch (see page 14-290). If the transmission range switch is OK, replace the transmission range switch subharness, then go to step 8.



BACK

Protected by AR

8. Clear the DTC with the HDS.

9. Start the engine.

10. With the brake pedal pressed, move the shift lever through all positions. Stop for at least 1 second in each position.

11. Check for DTC(s) in the DTCs/Freeze Data in A/T Mode Menu with the HDS.

    *Is DTC P0705 indicated?*

    **YES**—Replace the transmission range switch (see page 14-292), then go to step 8.

    **NO**—Go to step 12.

12. Monitor the OBD status for P0705 in the DTCs/Freeze Data in A/T Mode Menu for a pass/fail.

    *Does the result indicate PASSED?*

    **YES**—Troubleshooting is complete. If any other DTCs were indicated on step 11, go to the indicated DTC's troubleshooting. ■

    **NO**—If the HDS indicates FAILED, check for poor connections and loose terminals at the transmission range switch and the PCM, then go to step 1. If the HDS indicates NOT COMPLETED, return to step 9 and recheck.

Protected by AR



## DTC Troubleshooting (cont'd)

### **DTC P0706:** Open in Transmission Range Switch Circuit

NOTE:
- Before you troubleshoot, record all freeze data and any on-board snapshot, and review General Troubleshooting Information (see page 14-4).
- This code is caused by an electrical circuit problem and cannot be caused by a mechanical problem in the transmission.

1. Clear the DTC with the HDS.

2. Raise the vehicle on a lift, make sure it is securely supported, and allow all four wheels to rotate freely.

3. Start the engine, and turn the VSA off (the light on the VSA OFF switch comes on). Run the engine in the D position until the vehicle speed reaches 25 mph (40 km/h), then slow down, stop the wheels, and turn the ignition switch OFF.

4. Run the engine in the D position until the vehicle speed reaches 25 mph (40 km/h), then slow down and stop the wheels.

5. Verify the ATP FWD input with the HDS in the A/T data list while the shift lever is in the D and S positions.

   *Is ATP FWD ON in both D and S positions?*

   **YES**—Intermittent failure, the system is OK at this time. ■

   **NO**—Go to step 6.

6. Turn the ignition switch OFF.

7. Disconnect the transmission range switch connector.

8. Connect the transmission range switch connector terminal No. 6 to body ground with a jumper wire. Turn the ignition switch ON (II), and verify the ATP FWD input in the A/T data list.

**TRANSMISSION RANGE SWITCH CONNECTOR**

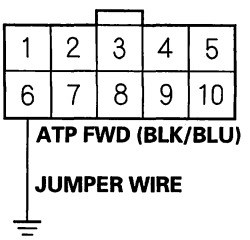


Wire side of female terminals

*Is ATP FWD ON?*

**YES**—Go to step 9.

**NO**—Repair open in the wire between PCM connector terminal B28 and the transmission range switch, then go to step 11.



BACK

Protected by AR

9. Turn the ignition switch OFF.

10. Check for continuity between transmission range switch connector terminal No. 5 and body ground.

**TRANSMISSION RANGE SWITCH CONNECTOR**

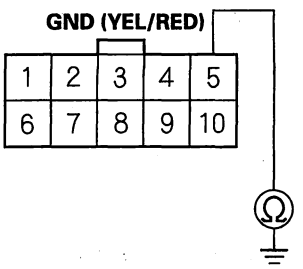


Wire side of female terminals

*Is there continuity?*

**YES**—Replace the transmission range switch (see page 14-292), then go to step 11.

**NO**—Repair open in the wire between the transmission range switch and ground (G101), or repair poor ground (G101), then go to step 11.

11. Clear the DTC with the HDS.

12. Run the engine in the D position until the vehicle speed reaches 25 mph (40 km/h), then slow down, stop the wheels, and turn the ignition switch OFF.

13. Run the engine in the D position until the vehicle speed reaches 25 mph (40 km/h), then slow down and stop the wheels.

14. Check for DTC(s) in the DTCs/Freeze Data in A/T Mode Menu with the HDS.

    *Is DTC P0706 indicated?*

    **YES**—Check for poor connections and loose terminals at the transmission range switch and the PCM, then go to step 1.

    **NO**—Go to step 15.

15. Monitor the OBD status for P0706 in the DTCs/Freeze Data in A/T Mode Menu for a pass/fail.

    *Does the result indicate PASSED?*

    **YES**—Troubleshooting is complete. If any other DTCs were indicated on step 14, go to the indicated DTC's troubleshooting.■

    **NO**—If the HDS indicates FAILED, check for poor connections and loose terminals at the transmission range switch and the PCM, then go to step 1. If the HDS indicates NOT COMPLETED, return to step 12 and recheck.

Protected by AR



## DTC Troubleshooting (cont'd)

### DTC P0711: Problem in ATF Temperature Sensor Circuit

NOTE:
- Before you troubleshoot, record all freeze data and any on-board snapshot, and review General Troubleshooting Information (see page 14-4).
- This code is caused by an electrical circuit problem and cannot be caused by a mechanical problem in the transmission.

1. Check the ATF temperature with the HDS in the A/T data list.

   *Does the ATF temperature exceed the ambient-air temperature?*

   **YES**—Record the ATF temperature. Leave the engine off for more than 30 minutes, and go to step 2.

   **NO**—Record the ATF temperature. Test the stall speed RPM (see page 14-211) three times. Go to step 2 after stall speed testing.

2. Check the ATF temperature with the HDS.

   *Does the ATF temperature change?*

   **YES**—Leave the engine off for more than 30 minutes, and go to step 3.

   **NO**—Replace the ATF temperature sensor (see page 14-237), then go to step 5.

3. Check the ECT SENSOR with the HDS.

   *Is the ECT SENSOR equal to the ambient-air temperature?*

   **YES**—Go to step 4.

   **NO**—Leave the engine off until the ECT SENSOR reads the same as ambient-air temperature, then go to step 4.

4. Check the ATF TEMP SENSOR with the HDS.

   *Does the ATF temperature read about the same as the ECT SENSOR?*

   **YES**—Intermittent failure, the system is OK at this time. Check for poor connections or loose terminals at the ATF temperature sensor and the PCM. ■

   **NO**—Replace the ATF temperature sensor (see page 14-237), then go to step 5.

5. Clear the DTC with the HDS.

6. Test-drive the vehicle for several minutes in the D position through all five gears.

7. Check for DTC(s) in the DTCs/Freeze Data in A/T Mode Menu with the HDS.

   *Is DTC P0711 indicated?*

   **YES**—Check for poor connections and loose terminals at the ATF temperature sensor and the PCM, then go to step 1.

   **NO**—Go to step 8.

8. Monitor the OBD status for P0711 in the DTCs/Freeze Data in A/T Mode Menu for a pass/fail.

   *Does the result indicate PASSED?*

   **YES**—Troubleshooting is complete. If any other DTCs were indicated on step 7, go to the indicated DTC's troubleshooting. ■

   **NO**—If the HDS indicates FAILED, check for poor connections and loose terminals at the ATF temperature sensor and the PCM, then go to step 1. If the HDS indicates NOT COMPLETED, return to step 6 and recheck.



BACK

Protected by AR

## DTC P0712: Short in ATF Temperature Sensor Circuit

NOTE:
- Before you troubleshoot, record all freeze data and any on-board snapshot, and review General Troubleshooting Information (see page 14-4).
- This code is caused by an electrical circuit problem and cannot be caused by a mechanical problem in the transmission.

1. Check the ATF temperature sensor voltage with the HDS in the A/T data list.

   *Is the ATF TEMP SENSOR voltage 0.07 V or less?*

   **YES**—Go to step 2.

   **NO**—Intermittent failure, the system is OK at this time. Check for an intermittent short in the ATFT wire between the ATF temperature sensor and the PCM. ■

2. Disconnect the ATF temperature sensor connector at the transmission end cover.

3. Check the ATF TEMP SENSOR voltage with the HDS.

   *Is the ATF TEMP SENSOR voltage 0.07 V or less?*

   **YES**—Go to step 4.

   **NO**—Replace the ATF temperature sensor (see page 14-237), then go to step 12.

4. Turn the ignition switch OFF.

5. Jump the SCS line with the HDS.

6. Disconnect PCM connector B (44P).

7. Check for continuity between ATF temperature sensor connector terminal No. 2 and body ground.

**ATF TEMPERATURE SENSOR CONNECTOR**

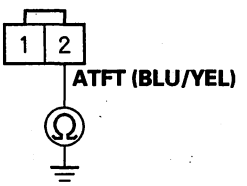


Wire side of female terminals

*Is there continuity?*

**YES**—Repair short in the wire between PCM connector terminal B27 and ATF temperature sensor connector terminal No. 2, then go to step 12.

**NO**—Go to step 8.

8. Update the A/T software in the PCM if it does not have the latest software (see page 14-8), or substitute a known-good PCM (see page 14-10).

9. Test-drive the vehicle for several minutes in the D position through all five gears.

10. Check for DTC(s) in the DTCs/Freeze Data in A/T Mode Menu with the HDS.

    *Is DTC P0712 indicated?*

    **YES**—If the PCM was updated, substitute a known-good PCM (see page 14-10), then recheck. If the PCM was substituted, go to step 1.

    **NO**—Go to step 11.

(cont'd)

Protected by AR



## DTC Troubleshooting (cont'd)

11. Monitor the OBD status for P0712 in the DTCs/ Freeze Data in A/T Mode Menu for a pass/fail.

    *Does the result indicate PASSED?*

    **YES**—If the PCM was updated, troubleshooting is complete. If the PCM was substituted, replace the original PCM (see page 11-252). If any other DTCs were indicated on step 10, go to the indicated DTC's troubleshooting.■

    **NO**—If the HDS indicates FAILED, check for poor connections and loose terminals at the ATF temperature sensor and the PCM. If the PCM was updated, substitute a known-good PCM (see page 14-10), then recheck. If the PCM was substituted, go to step 1. If the HDS indicates NOT COMPLETED, return to step 9 and recheck.

12. Clear the DTC with the HDS.

13. Test-drive the vehicle for several minutes in the D position through all five gears.

14. Check for DTC(s) in the DTCs/Freeze Data in A/T Mode Menu with the HDS.

    *Is DTC P0712 indicated?*

    **YES**—Check for poor connections and loose terminals at the ATF temperature sensor and the PCM, then go to step 1.

    **NO**—Go to step 15.

15. Monitor the OBD status for P0712 in the DTCs/ Freeze Data in A/T Mode Menu for a pass/fail.

    *Does the result indicate PASSED?*

    **YES**—Troubleshooting is complete. If any other DTCs were indicated on step 14, go to the indicated DTC's troubleshooting.■

    **NO**—If the HDS indicates FAILED, go to step 1. If the HDS indicates NOT COMPLETED, return to step 13 and recheck.



BACK

Protected by AR

## **DTC P0713:** Open in ATF Temperature Sensor Circuit

NOTE:
- Before you troubleshoot, record all freeze data and any on-board snapshot, and review General Troubleshooting Information (see page 14-4).
- This code is caused by an electrical circuit problem and cannot be caused by a mechanical problem in the transmission.

1. Check the ATF TEMP SENSOR voltage with the HDS in the A/T data list.

   *Does the ATF TEMP SENSOR voltage exceed 4.93 V?*

   **YES**—Go to step 2.

   **NO**—Intermittent failure, the system is OK at this time. Check for poor connections or loose terminals at the ATF temperature sensor and the PCM. ■

2. Turn the ignition switch OFF.

3. Disconnect the ATF temperature sensor connector at the transmission end cover.

4. Turn the ignition switch ON (II).

5. Measure the voltage between ATF temperature sensor connector terminal No. 2 and body ground.

**ATF TEMPERATURE SENSOR CONNECTOR**

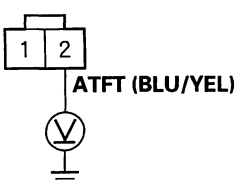


Wire side of female terminals

*Is there about 5 V?*

**YES**—Go to step 6.

**NO**—Go to step 7.

6. Measure the voltage between ATF temperature sensor connector terminals No. 1 and No. 2.

**ATF TEMPERATURE SENSOR CONNECTOR**

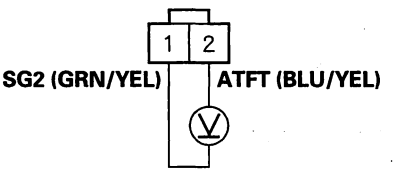


Wire side of female terminals

*Is there about 5 V?*

**YES**—Replace the ATF temperature sensor (see page 14-237), then go to step 16.

**NO**—Repair open in the wire between PCM connector terminal B33 and the ATF temperature sensor connector, then go to step 16.

(cont'd)

Protected by AR



## DTC Troubleshooting (cont'd)

7. Turn the ignition switch OFF.

8. Jump the SCS line with the HDS.

9. Disconnect PCM connector B (44P).

10. Check for continuity between PCM connector terminal B27 and ATF temperature sensor connector terminal No. 2.

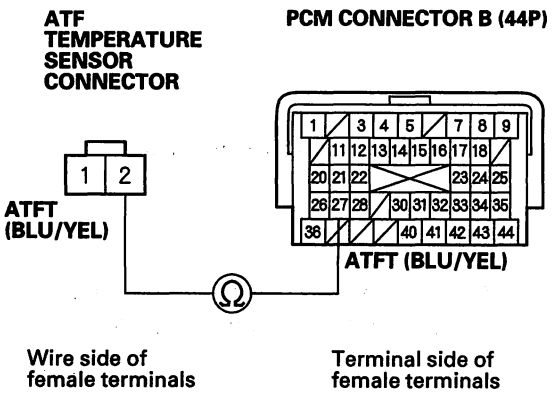


*Is there continuity?*

**YES**—Check for poor connections and loose terminals at the ATF temperature sensor and the PCM. If the connections are OK, go to step 11.

**NO**—Repair open in the wire between PCM connector terminal B27 and the ATF temperature sensor, then go to step 16.

11. Connect the ATF temperature sensor connector.

12. Update the A/T software in the PCM if it does not have the latest software (see page 14-8), or substitute a known-good PCM (see page 14-10).

13. Test-drive the vehicle for several minutes in the D position through all five gears.

14. Check for DTC(s) in the DTCs/Freeze Data in A/T Mode Menu with the HDS.

    *Is DTC P0713 indicated?*

    **YES**—If the PCM was updated, substitute a known-good PCM (see page 14-10), then recheck. If the PCM was substituted, go to step 1.

    **NO**—Go to step 15.

15. Monitor the OBD status for P0713 in the DTCs/Freeze Data in A/T Mode Menu for a pass/fail.

    *Does the result indicate PASSED?*

    **YES**—If the PCM was updated, troubleshooting is complete. If the PCM was substituted, replace the original PCM (see page 11-252). If any other DTCs were indicated on step 13, go to the indicated DTC's troubleshooting.■

    **NO**—If the HDS indicates FAILED, check for poor connections and loose terminals at the ATF temperature sensor and the PCM. If the PCM was updated, substitute a known-good PCM (see page 14-10), then recheck. If the PCM was substituted, go to step 1. If the HDS indicates NOT COMPLETED, return to step 13 and recheck.



BACK

Protected by AR

16. Connect the ATF temperature sensor connector.

17. Clear the DTC with the HDS.

18. Test-drive the vehicle for several minutes in the D position through all five gears.

19. Check for DTC(s) in the DTCs/Freeze Data in A/T Mode Menu with the HDS.

    *Is DTC P0713 indicated?*

    **YES**—Check for poor connections and loose terminals at the ATF temperature sensor and the PCM, then go to step 1.

    **NO**—Go to step 20.

20. Monitor the OBD status for P0713 in the DTCs/Freeze Data in A/T Mode Menu for a pass/fail.

    *Does the result indicate PASSED?*

    **YES**—Troubleshooting is complete. If any other DTCs were indicated on step 19, go to the indicated DTC's troubleshooting. ■

    **NO**—If the HDS indicates FAILED, check for poor connections and loose terminals at the ATF temperature sensor and the PCM, then go to step 1. If the HDS indicates NOT COMPLETED, return to step 18 and recheck.

Protected by AR



## DTC Troubleshooting (cont'd)

**DTC P0716:** Problem in Input Shaft (Mainshaft) Speed Sensor Circuit

**DTC P0717:** Problem in Input Shaft (Mainshaft) Speed Sensor Circuit (No Signal Input)

NOTE:
- Before you troubleshoot, record all freeze data and any on-board snapshot, and review General Troubleshooting Information (see page 14-4).
- This code is caused by an electrical circuit problem and cannot be caused by a mechanical problem in the transmission.

1. Clear the DTC with the HDS.
2. Raise the vehicle on a lift, make sure it is securely supported, and allow all four wheels to rotate freely.
3. Check for proper input shaft (mainshaft) speed sensor installation (see page 14-233). If the sensor is installed improperly correct problem, then go to step 36.
4. Start the engine, and turn the VSA off (the light on the VSA OFF switch comes on). Run the engine in the D position, and hold the vehicle at speeds over 30 mph (48 km/h) for more than 10 seconds. Slow down and stop the wheels.
5. Monitor the OBD status for P0716 or P0717 in the DTCs/Freeze Data in A/T Mode Menu for a pass/fail.

   *Does the result indicate FAILED?*

   **YES**—Go to step 6.

   **NO**—Intermittent failure, the system is OK at this time. Check for loose or poor connections at the PCM and input shaft (mainshaft) speed sensor connectors. If the HDS indicates NOT COMPLETED, return to step 4 and recheck.
6. Turn the ignition switch OFF.
7. Jump the SCS line with the HDS.
8. Disconnect PCM connector C (44P).
9. Check for continuity between PCM connector terminals C40 and body ground, and between C44 and body ground.

**PCM CONNECTOR C (44P)**

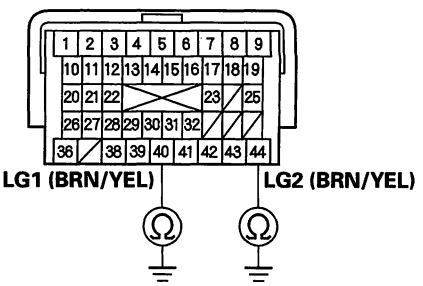


Terminal side of female terminals

*Is there continuity?*

**YES**—Go to step 10.

**NO**—Repair open in the wires between PCM connector terminals C40, C44 and ground (G101), or repair poor ground (G101), then go to step 36.



BACK

Protected by AR

10. Connect PCM connector C (44P).

11. Disconnect the input shaft (mainshaft) speed sensor connector.

12. Turn the ignition switch ON (II).

13. Measure the voltage between input shaft (mainshaft) speed sensor connector terminal No. 1 and body ground.

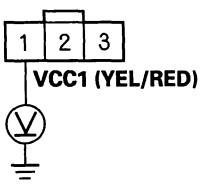


Wire side of female terminals

*Is there about 5 V?*

**YES**—Go to step 18.

**NO**—Go to step 14.

14. Turn the ignition switch OFF.

15. Disconnect PCM connector C (44P).

16. Check for continuity between PCM connector terminal C13 and input shaft (mainshaft) speed sensor connector terminal No. 1.

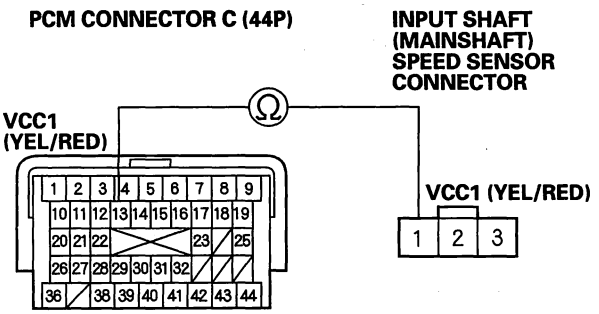


Terminal side of female terminals

Wire side of female terminals

*Is there continuity?*

**YES**—Go to step 17.

**NO**—Repair open in the wire between PCM connector terminal C13 and the input shaft (mainshaft) speed sensor, then go to step 36.

(cont'd)

Protected by AR



## DTC Troubleshooting (cont'd)

17. Check for continuity between PCM connector terminal C13 and body ground.

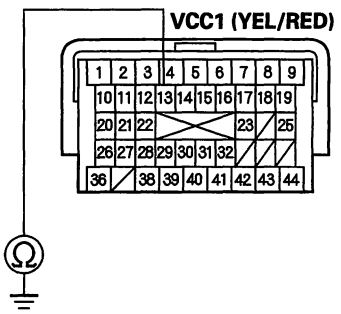


Terminal side of female terminals

*Is there continuity?*

**YES**—Repair short in the wire between PCM connector terminal C13 and the input shaft (mainshaft) speed sensor, then go to step 36.

**NO**—Check for poor connections and loose terminals at the PCM. If the connections are OK, go to step 32.

18. Turn the ignition switch OFF.

19. Disconnect PCM connector B (44P).

20. Check for continuity between input shaft (mainshaft) speed sensor connector terminal No. 2 and body ground.

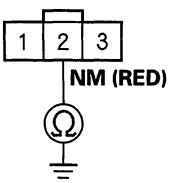


Wire side of female terminals

*Is there continuity?*

**YES**—Repair short in the wire between PCM connector terminal B17 and the input shaft (mainshaft) speed sensor connector, then go to step 36.

**NO**—Go to step 21.



BACK

Protected by AR

21. Check for continuity between PCM connector terminal C14 and input shaft (mainshaft) speed sensor connector terminal No. 3.

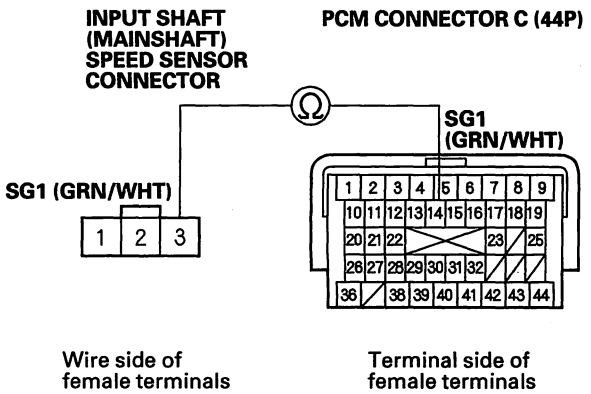


*Is there continuity?*

**YES**—Go to step 22.

**NO**—Repair open in the wire between the input shaft (mainshaft) speed sensor connector and PCM connector terminal C14, then go to step 36.

22. Connect PCM connector B (44P).

23. Turn the ignition switch ON (II).

24. Measure the voltage between input shaft (mainshaft) speed sensor connector terminals No. 2 and No. 3.

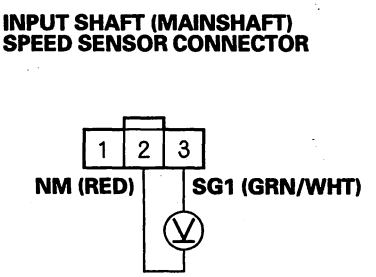


*Is there about 5 V?*

**YES**—Go to step 28.

**NO**—Go to step 25.

(cont'd)

Protected by AR



## DTC Troubleshooting (cont'd)

25. Turn the ignition switch OFF.

26. Disconnect PCM connector B (44P).

27. Check for continuity between PCM connector terminal B17 and input shaft (mainshaft) speed sensor connector terminal No. 2.

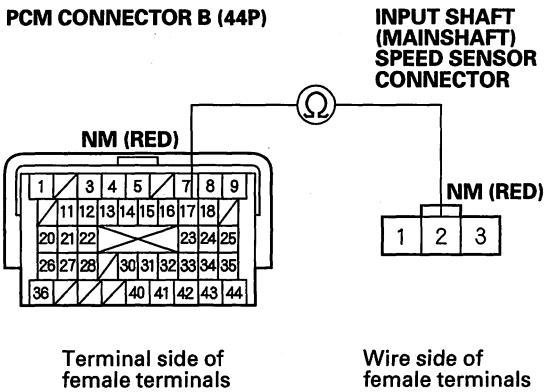


*Is there continuity?*

**YES**—Go to step 32.

**NO**—Repair open in the wire between PCM connector terminal B17 and the input shaft (mainshaft) speed sensor, then go to step 36.

28. Connect the input shaft (mainshaft) speed sensor connector.

29. Clear the DTC with the HDS.

30. Start the engine, run the vehicle in the D position, and hold the vehicle at speeds over 30 mph (48 km/h) for more than 10 seconds.

31. Monitor the OBD status for P0716 or P0717 in the DTCs/Freeze Data in A/T Mode Menu for a pass/fail.

    *Does the result indicate FAILED?*

    **YES**—Replace the input shaft (mainshaft) speed sensor (see page 14-233), then go to step 36.

    **NO**—Go to step 32.



BACK

Protected by AR

32. Update the A/T software in the PCM if it does not have the latest software (see page 14-8), or substitute a known-good PCM (see page 14-10).

33. Start the engine, run the vehicle in the D position, and hold the vehicle at speeds over 30 mph (48 km/h) for more than 10 seconds.

34. Check for DTC(s) in the DTCs/Freeze Data in A/T Mode Menu with the HDS.

    *Is DTC P0716 or P0717 indicated?*

    **YES**—If the PCM was updated, substitute a known-good PCM (see page 14-10), then recheck. If the PCM was substituted, go to step 1.

    **NO**—Go to step 35.

35. Monitor the OBD status for P0716 or P0717 in the DTCs/Freeze Data in A/T Mode Menu for a pass/fail.

    *Does the result indicate PASSED?*

    **YES**—If the PCM was updated, troubleshooting is complete. If the PCM was substituted, replace the original PCM (see page 11-252). If any other DTCs were indicated on step 34, go to the indicated DTC's troubleshooting.■

    **NO**—If the HDS indicates FAILED, check for poor connections and loose terminals at the input shaft (mainshaft) speed sensor and the PCM. If the PCM was updated, substitute a known-good PCM (see page 14-10), then recheck. If the PCM was substituted, go to step 1. If the HDS indicates NOT COMPLETED, return to step 33 and recheck.

36. Clear the DTC with the HDS.

37. Start the engine, run the vehicle in the D position, and hold the vehicle at speeds over 30 mph (48 km/h) for more than 10 seconds.

38. Check for DTC(s) in the DTCs/Freeze Data in A/T Mode Menu with the HDS.

    *Is DTC P0716 or P0717 indicated?*

    **YES**—Check for poor connections and loose terminals at the input shaft (mainshaft) speed sensor and the PCM, then go to step 1.

    **NO**—Go to step 39.

39. Monitor the OBD status for P0716 or P0717 in the DTCs/Freeze Data in A/T Mode Menu for a pass/fail.

    *Does the result indicate PASSED?*

    **YES**—Troubleshooting is complete. If any other DTCs were indicated on step 38, go to the indicated DTC's troubleshooting.■

    **NO**—If the HDS indicates FAILED, check for poor connections and loose terminals at the input shaft (mainshaft) speed sensor and the PCM, then go to step 1. If the HDS indicates NOT COMPLETED, return to step 37 and recheck.

Protected by AR



## DTC Troubleshooting (cont'd)

### DTC P0718: Input Shaft (Mainshaft) Speed Sensor Intermittent Failure

NOTE:
- Before you troubleshoot, record all freeze data and any on-board snapshot, and review General Troubleshooting Information (see page 14-4).
- This code is caused by an electrical circuit problem and cannot be caused by a mechanical problem in the transmission.

1. Clear the DTC with the HDS.

2. Test-drive the vehicle for several minutes in the D position through all five gears.

3. Monitor the OBD status for P0718 in the DTCs/ Freeze Data in A/T Mode Menu for a pass/fail.

   *Does the result indicate FAILED?*

   **YES**—Go to step 4.

   **NO**—Intermittent failure, the system is OK at this time. Check for poor connections or loose terminals at the input shaft (mainshaft) speed sensor and the PCM. If the HDS indicates NOT COMPLETED, return to step 2 and recheck.

4. Turn the ignition switch OFF.

5. Disconnect the input shaft (mainshaft) speed sensor connector, and inspect the connector and connector terminals to be sure they are making good contact.

   *Are the connector terminals OK?*

   **YES**—Go to step 6.

   **NO**—Repair the connector terminals, then go to step 6.

6. Connect the input shaft (mainshaft) speed sensor connector.

7. Test-drive the vehicle for several minutes in the D position through all five gears.

8. Monitor the OBD status for P0718 in the DTCs/ Freeze Data in A/T Mode Menu for a pass/fail.

   *Does the result indicate FAILED?*

   **YES**—Go to step 9.

   **NO**—Troubleshooting is complete. If the HDS indicates NOT COMPLETED, return to step 7 and recheck.

9. Turn the ignition switch OFF.

10. Jump the SCS line with the HDS.

11. Disconnect PCM connector C (44P).

12. Check for continuity between PCM connector terminals C40 and body ground, and between C44 and body ground.

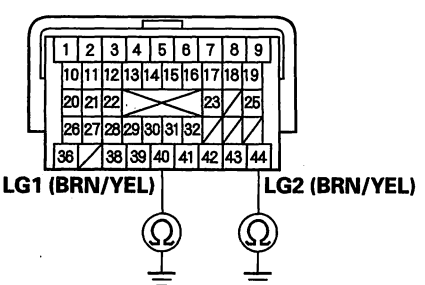


Terminal side of female terminals

*Is there continuity?*

**YES**—Go to step 13.

**NO**—Repair open in the wires between PCM connector terminals C40, C44 and ground (G101), or repair poor ground (G101), then go to step 34.



BACK

Protected by AR

13. Connect PCM connector C (44P).

14. Disconnect the input shaft (mainshaft) speed sensor connector.

15. Turn the ignition switch ON (II).

16. Measure the voltage between input shaft (mainshaft) speed sensor connector terminal No. 1 and body ground.

**INPUT SHAFT (MAINSHAFT) SPEED SENSOR CONNECTOR**

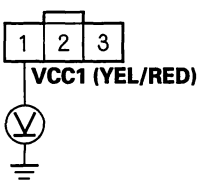


Wire side of female terminals

*Is there about 5 V?*

**YES**—Go to step 17.

**NO**—Go to step 26.

17. Turn the ignition switch OFF.

18. Disconnect PCM connector B (44P).

19. Check for continuity between input shaft (mainshaft) speed sensor connector terminal No. 2 and body ground.

**INPUT SHAFT (MAINSHAFT) SPEED SENSOR CONNECTOR**

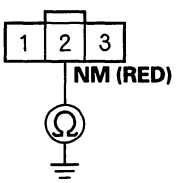


Wire side of female terminals

*Is there continuity?*

**YES**—Repair short in the wire between PCM connector terminal B17 and the input shaft (mainshaft) speed sensor connector, then go to step 34.

**NO**—Go to step 20.

(cont'd)

Protected by AR



## DTC Troubleshooting (cont'd)

20. Connect PCM connector B (44P).

21. Turn the ignition switch ON (II).

22. Measure the voltage between input shaft (mainshaft) speed sensor connector terminal No. 2 and body ground.

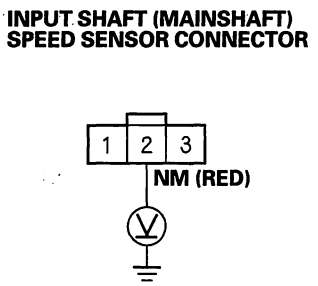


Wire side of female terminals

*Is there about 5 V?*

**YES**—Replace the input shaft (mainshaft) speed sensor (see page 14-233), then go to step 34.

**NO**—Go to step 23.

23. Turn the ignition switch OFF.

24. Disconnect PCM connector B (44P).

25. Check for continuity between PCM connector terminal B17 and input shaft (mainshaft) speed sensor connector terminal No. 2.

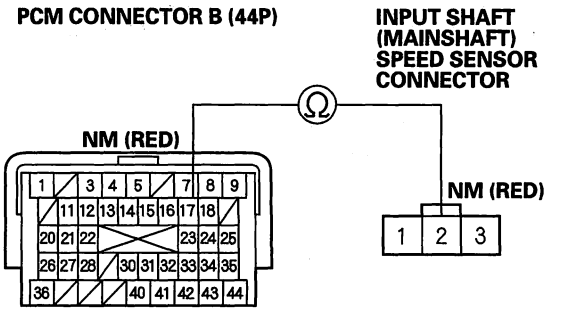


Terminal side of female terminals

Wire side of female terminals

*Is there continuity?*

**YES**—Go to step 30.

**NO**—Repair open in the wire between PCM connector terminal B17 and the input shaft (mainshaft) speed sensor, then go to step 34.



BACK

Protected by AR

26. Turn the ignition switch OFF.

27. Disconnect PCM connector C (44P).

28. Check for continuity between PCM connector terminal C13 and input shaft (mainshaft) speed sensor connector terminal No. 1.

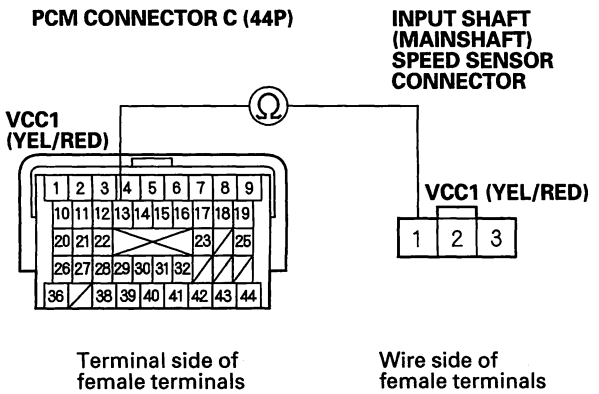


*Is there continuity?*

**YES**—Go to step 29.

**NO**—Repair open in the wire between PCM connector terminal C13 and the input shaft (mainshaft) speed sensor, then go to step 34.

29. Check for continuity between PCM connector terminal C13 and body ground.

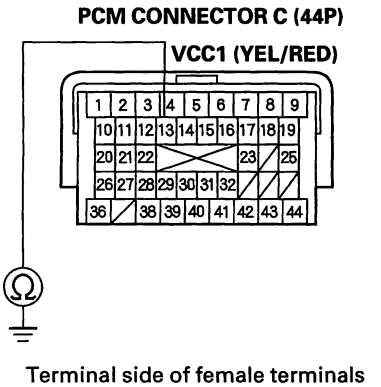


*Is there continuity?*

**YES**—Repair short in the wire between PCM connector terminal C13 and the input shaft (mainshaft) speed sensor, then go to step 30.

**NO**—Check for poor connections and loose terminals at the input shaft (mainshaft) speed sensor and the PCM. If the connections are OK, go to step 30.

(cont'd)

Protected by AR



## DTC Troubleshooting (cont'd)

30. Update the A/T software in the PCM if it does not have the latest software (see page 14-8), or substitute a known-good PCM (see page 14-10).

31. Test-drive the vehicle for several minutes in the D position through all five gears.

32. Check for DTC(s) in the DTCs/Freeze Data in A/T Mode Menu with the HDS.

    *Is DTC P0718 indicated?*

    **YES**—If the PCM was updated, substitute a known-good PCM (see page 14-10), then recheck. If the PCM was substituted, go to step 1.

    **NO**—Go to step 33.

33. Monitor the OBD status for P0718 in the DTCs/Freeze Data in A/T Mode Menu for a pass/fail.

    *Does the result indicate PASSED?*

    **YES**—If the PCM was updated, troubleshooting is complete. If the PCM was substituted, replace the original PCM (see page 11-252). If any other DTCs were indicated on step 32, go to the indicated DTC's troubleshooting.■

    **NO**—If the HDS indicates FAILED, check for poor connections and loose terminals at the input shaft (mainshaft) speed sensor and the PCM. If the PCM was updated, substitute a known-good PCM (see page 14-10), then recheck. If the PCM was substituted, go to step 1. If the HDS indicates NOT COMPLETED, return to step 31 and recheck.

34. Clear the DTC with the HDS.

35. Test-drive the vehicle for several minutes in the D position through all five gears.

36. Check for DTC(s) in the DTCs/Freeze Data in A/T Mode Menu with the HDS.

    *Is DTC P0718 indicated?*

    **YES**—Check for poor connections and loose terminals at the input shaft (mainshaft) speed sensor and the PCM, then go to step 1.

    **NO**—Go to step 37.

37. Monitor the OBD status for P0718 in the DTCs/Freeze Data in A/T Mode Menu for a pass/fail.

    *Does the result indicate PASSED?*

    **YES**—Troubleshooting is complete. If any other DTCs were indicated on step 36, go to the indicated DTC's troubleshooting.■

    **NO**—If the HDS indicates FAILED, check for poor connections and loose terminals at the input shaft (mainshaft) speed sensor and the PCM, then go to step 1. If the HDS indicates NOT COMPLETED, return to step 35 and recheck.



BACK

Protected by AR

## **DTC P0721:** Problem in Output Shaft (Countershaft) Speed Sensor Circuit

## **DTC P0722:** Problem in Output Shaft (Countershaft) Speed Sensor Circuit (No Signal Input)

NOTE:
- Before you troubleshoot, record all freeze data and any on-board snapshot, and review General Troubleshooting Information (see page 14-4).
- This code is caused by an electrical circuit problem and cannot be caused by a mechanical problem in the transmission.

1. Clear the DTC with the HDS.

2. Raise the vehicle on a lift, make sure it is securely supported, and allow all four wheels to rotate freely.

3. Check for proper output shaft (countershaft) speed sensor installation (see page 14-233). If the sensor is installed improperly correct problem, then go to step 36.

4. Start the engine, run the vehicle in the D position with engine speed 2,000 rpm or higher for more than 10 seconds. Slow down and stop the wheels.

5. Monitor the OBD status for P0721 or P0722 in the DTCs/Freeze Data in A/T Mode Menu for a pass/fail.

   *Does the result indicate FAILED?*

   **YES**—Go to step 6.

   **NO**—Intermittent failure, the system is OK at this time. Check for loose or poor connections at the PCM and the output shaft (countershaft) speed sensor connectors. If the HDS indicates NOT COMPLETED, return to step 4 and recheck.

6. Turn the ignition switch OFF.

7. Jump the SCS line with the HDS.

8. Disconnect PCM connector C (44P).

9. Check for continuity between PCM connector terminals C40 and body ground, and between C44 and body ground.

**PCM CONNECTOR C (44P)**

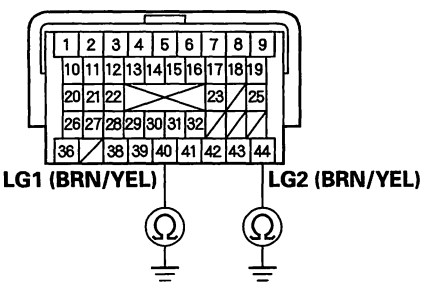


Terminal side of female terminals

*Is there continuity?*

**YES**—Go to step 10.

**NO**—Repair open in the wires between PCM connector terminals C40, C44 and ground (G101), or repair poor ground (G101), then go to step 36.

(cont'd)

Protected by AR



## DTC Troubleshooting (cont'd)

10. Connect PCM connector B (44P).

11. Disconnect the output shaft (countershaft) speed sensor connector.

12. Turn the ignition switch ON (II).

13. Measure the voltage between output shaft (countershaft) speed sensor connector terminal No. 1 and body ground.

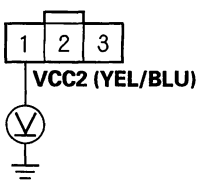


Wire side of female terminals

*Is there about 5 V?*

**YES**—Go to step 18.

**NO**—Go to step 14.

14. Turn the ignition switch OFF.

15. Disconnect PCM connector B (44P).

16. Check for continuity between PCM connector terminal B18 and output shaft (countershaft) speed sensor connector terminal No. 1.

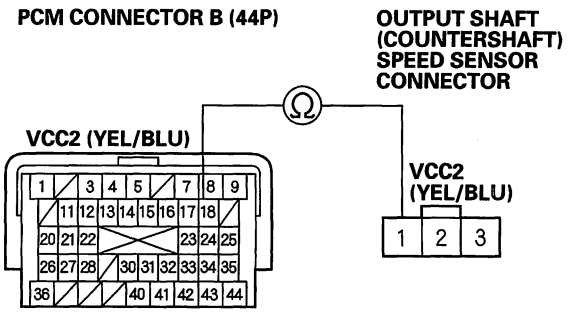


Terminal side of female terminals

Wire side of female terminals

*Is there continuity?*

**YES**—Go to step 17.

**NO**—Repair open in the wire between PCM connector terminal B18 and the output shaft (countershaft) speed sensor, then go to step 36.



BACK

Protected by AR

17. Check for continuity between PCM connector terminal B18 and body ground.

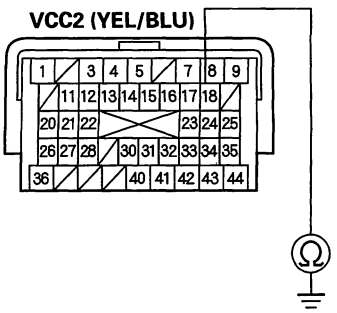


Terminal side of female terminals

*Is there continuity?*

**YES**—Repair short in the wire between PCM connector terminal B18 and the output shaft (countershaft) speed sensor, then go to step 36.

**NO**—Check for poor connections and loose terminals at the PCM. If the connections are OK, go to step 32.

18. Turn the ignition switch OFF.

19. Disconnect PCM connector C (44P).

20. Check for continuity between output shaft (countershaft) speed sensor connector terminal No. 2 and body ground.

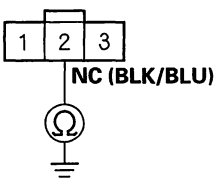


Wire side of female terminals

*Is there continuity?*

**YES**—Repair short in the wire between PCM connector terminal C43 and the output shaft (countershaft) speed sensor connector, then go to step 36.

**NO**—Go to step 21.

(cont'd)

Protected by AR



## DTC Troubleshooting (cont'd)

21. Check for continuity between PCM connector terminal B33 and output shaft (countershaft) speed sensor connector terminal No. 3.

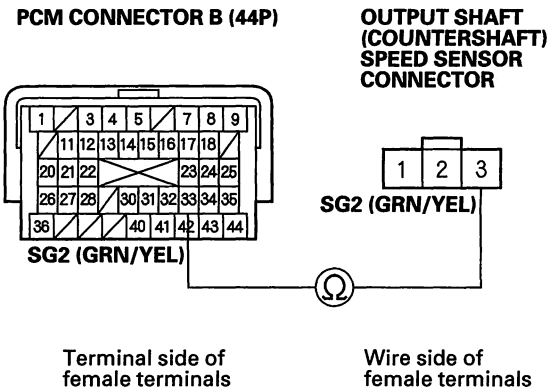


*Is there continuity?*

**YES**—Go to step 22.

**NO**—Repair open in the wire between the output shaft (countershaft) speed sensor connector and PCM connector terminal B33, then go to step 36.

22. Connect PCM connector B (44P).

23. Turn the ignition switch ON (II).

24. Measure the voltage between output shaft (countershaft) speed sensor connector terminals No. 2 and No. 3.

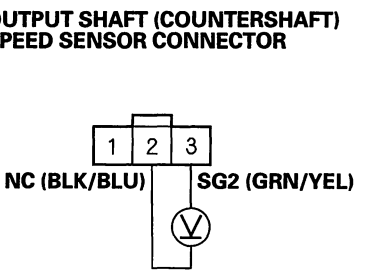


*Is there about 5 V?*

**YES**—Go to step 28.

**NO**—Go to step 25.



BACK

Protected by AR

25. Turn the ignition switch OFF.

26. Disconnect PCM connector C (44P).

27. Check for continuity between PCM connector terminal C43 and output shaft (countershaft) speed sensor connector terminal No. 2.

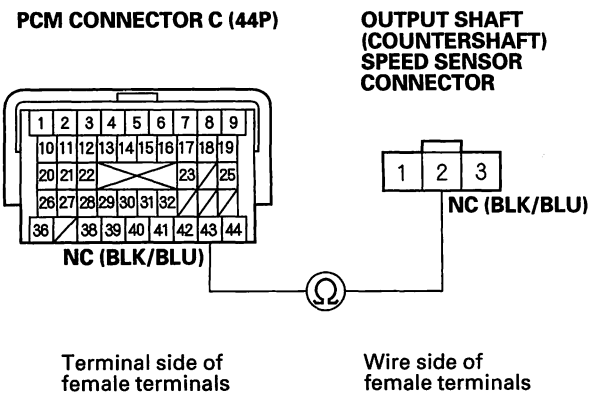


*Is there continuity?*

**YES**—Go to step 32.

**NO**—Repair open in the wire between PCM connector terminal C43 and the output shaft (countershaft) speed sensor, then go to step 36.

28. Connect the output shaft (countershaft) speed sensor connector.

29. Clear the DTC with the HDS.

30. Start the engine, run the vehicle in the D position with engine speed 2,000 rpm or higher for more than 10 seconds. Slow down and stop the wheels.

31. Monitor the OBD status for P0721 or P0722 in the DTCs/Freeze Data in A/T Mode Menu for a pass/fail.

*Does the result indicate FAILED?*

**YES**—Replace the output shaft (countershaft) speed sensor (see page 14-233), then go to step 36.

**NO**—Go to step 32.

(cont'd)

Protected by AR



## DTC Troubleshooting (cont'd)

32. Update the A/T software in the PCM if it does not have the latest software (see page 14-8), or substitute a known-good PCM (see page 14-10).

33. Start the engine, run the vehicle in the D position with engine speed 2,000 rpm or higher for more than 10 seconds. Slow down and stop the wheels.

34. Check for DTC(s) in the DTCs/Freeze Data in A/T Mode Menu with the HDS.

    *Is DTC P0721 or P0722 indicated?*

    **YES**—If the PCM was updated, substitute a known-good PCM (see page 14-10), then recheck. If the PCM was substituted, go to step 1.

    **NO**—Go to step 35.

35. Monitor the OBD status for P0721 or P0722 in the DTCs/Freeze Data in A/T Mode Menu for a pass/fail.

    *Does the result indicate PASSED?*

    **YES**—If the PCM was updated, troubleshooting is complete. If the PCM was substituted, replace the original PCM (see page 11-252). If any other DTCs were indicated on step 34, go to the indicated DTC's troubleshooting.■

    **NO**—If the HDS indicates FAILED, check for poor connections and loose terminals at the output shaft (countershaft) speed sensor and the PCM. If the PCM was updated, substitute a known-good PCM (see page 14-10), then recheck. If the PCM was substituted, go to step 1. If the HDS indicates NOT COMPLETED, return to step 33 and recheck.

36. Clear the DTC with the HDS.

37. Start the engine, run the vehicle in the D position with engine speed 2,000 rpm or higher for more than 10 seconds. Slow down and stop the wheels.

38. Check for DTC(s) in the DTCs/Freeze Data in A/T Mode Menu with the HDS.

    *Is DTC P0721 or P0722 indicated?*

    **YES**—Check for poor connections and loose terminals at the output shaft (countershaft) speed sensor and the PCM, then go to step 1.

    **NO**—Go to step 39.

39. Monitor the OBD status for P0721 or P0722 in the DTCs/Freeze Data in A/T Mode Menu for a pass/fail.

    *Does the result indicate PASSED?*

    **YES**—Troubleshooting is complete. If any other DTCs were indicated on step 38, go to the indicated DTC's troubleshooting.■

    **NO**—If the HDS indicates FAILED, check for poor connections and loose terminals at the output shaft (countershaft) speed sensor and the PCM, then go to step 1. If the HDS indicates NOT COMPLETED, return to step 37 and recheck.



BACK

Protected by AR

## **DTC P0723:** Output Shaft (Countershaft) Speed Sensor Intermittent Failure

NOTE:
- Before you troubleshoot, record all freeze data and any on-board snapshot, and review General Troubleshooting Information (see page 14-4).
- This code is caused by an electrical circuit problem and cannot be caused by a mechanical problem in the transmission.

1. Clear the DTC with the HDS.

2. Test-drive the vehicle for several minutes in the D position through all five gears.

3. Monitor the OBD status for P0723 in the DTCs/ Freeze Data in A/T Mode Menu for a pass/fail.

   *Does the result indicate FAILED?*

   **YES**—Go to step 4.

   **NO**—Intermittent failure, the system is OK at this time. Check for poor connections and loose terminals at the output shaft (countershaft) speed sensor and the PCM. If the HDS indicates NOT COMPLETED, return to step 2 and recheck.

4. Turn the ignition switch OFF.

5. Disconnect the output shaft (countershaft) speed sensor connector, and inspect the connector and connector terminals to be sure they are making good contact.

   *Are the connector terminals OK?*

   **YES**—Go to step 6.

   **NO**—Repair the connector terminals, then go to step 6.

6. Connect the output shaft (countershaft) speed sensor connector.

7. Test-drive the vehicle for several minutes in the D position through all five gears.

8. Monitor the OBD status for P0723 in the DTCs/ Freeze Data in A/T Mode Menu for a pass/fail.

   *Does the result indicate FAILED?*

   **YES**—Go to step 9.

   **NO**—Troubleshooting is complete. If the HDS indicates NOT COMPLETED, return to step 7 and recheck.

9. Turn the ignition switch OFF.

10. Jump the SCS line with the HDS.

11. Disconnect PCM connector C (44P).

12. Check for continuity between PCM connector terminals C40 and body ground, and between C44 and body ground.

**PCM CONNECTOR C (44P)**

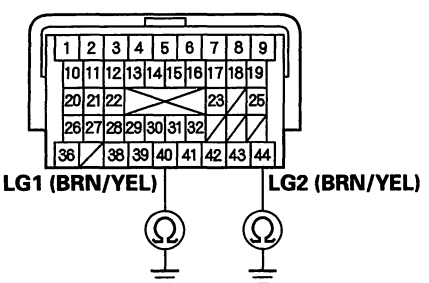


Terminal side of female terminals

*Is there continuity?*

**YES**—Go to step 13.

**NO**—Repair open in the wires between PCM connector terminals C40, C44 and ground (G101), or repair poor ground (G101), then go to step 34.

(cont'd)

Protected by AR



## DTC Troubleshooting (cont'd)

13. Connect PCM connector C (44P).

14. Disconnect the output shaft (countershaft) speed sensor connector.

15. Turn the ignition switch ON (II).

16. Measure the voltage between output shaft (countershaft) speed sensor connector terminal No. 1 and body ground.

**OUTPUT SHAFT (COUNTERSHAFT) SPEED SENSOR CONNECTOR**

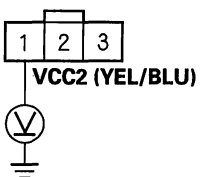


Wire side of female terminals

*Is there about 5 V?*

**YES**—Go to step 17.

**NO**—Go to step 26.

17. Turn the ignition switch OFF.

18. Disconnect PCM connector C (44P).

19. Check for continuity between output shaft (countershaft) speed sensor connector terminal No. 2 and body ground.

**OUTPUT SHAFT (COUNTERSHAFT) SPEED SENSOR CONNECTOR**

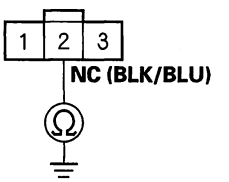


Wire side of female terminals

*Is there continuity?*

**YES**—Repair short in the wire between PCM connector terminal C43 and the output shaft (countershaft) speed sensor connector, then go to step 34.

**NO**—Go to step 20.



BACK

Protected by AR

20. Connect PCM connector C (44P).

21. Turn the ignition switch ON (II).

22. Measure the voltage between output shaft (countershaft) speed sensor connector terminal No. 2 and body ground.

**OUTPUT SHAFT (COUNTERSHAFT) SPEED SENSOR CONNECTOR**

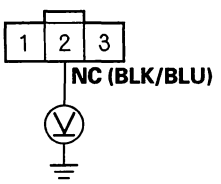


Wire side of female terminals

*Is there about 5 V?*

**YES**—Replace the output shaft (countershaft) speed sensor (see page 14-233), then go to step 34.

**NO**—Go to step 23.

23. Turn the ignition switch OFF.

24. Disconnect PCM connector C (44P).

25. Check for continuity between PCM connector terminal C43 and output shaft (countershaft) speed sensor connector terminal No. 2.

**PCM CONNECTOR C (44P)**

**OUTPUT SHAFT (COUNTERSHAFT) SPEED SENSOR CONNECTOR**

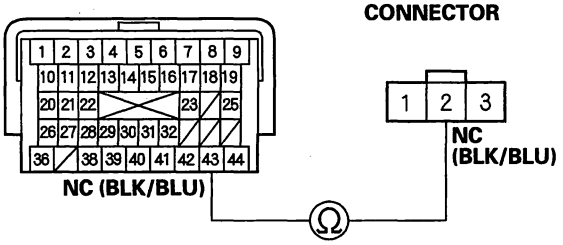


Terminal side of female terminals

Wire side of female terminals

*Is there continuity?*

**YES**—Go to step 30.

**NO**—Repair open in the wire between PCM connector terminal C43 and the output shaft (countershaft) speed sensor, then go to step 34.

(cont'd)

Protected by AR



## DTC Troubleshooting (cont'd)

26. Turn the ignition switch OFF.

27. Disconnect PCM connector B (44P).

28. Check for continuity between PCM connector terminal B18 and output shaft (countershaft) speed sensor connector terminal No. 1.

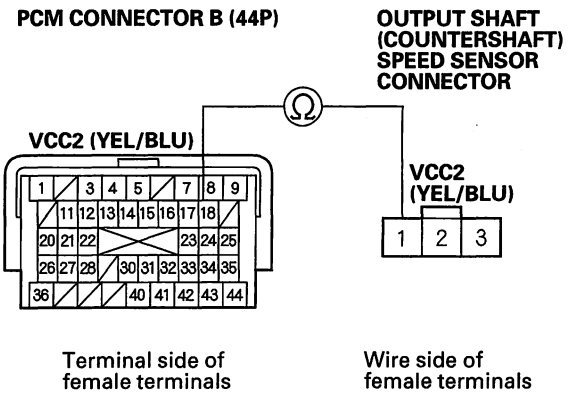


*Is there continuity?*

**YES**—Go to step 29.

**NO**—Repair open in the wire between PCM connector terminal B18 and the output shaft (countershaft) speed sensor, then go to step 34.

29. Check for continuity between PCM connector terminal B18 and body ground.

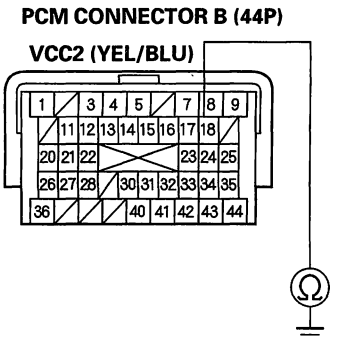


*Is there continuity?*

**YES**—Repair short in the wire between PCM connector terminal B18 and the output shaft (countershaft) speed sensor, then go to step 34.

**NO**—Check for poor connections and loose terminals at the output shaft (countershaft) speed sensor and the PCM. If the connections are OK, go to step 30.



BACK

Protected by AR

30. Update the A/T software in the PCM if it does not have the latest software (see page 14-8), or substitute a known-good PCM (see page 14-10).

31. Test-drive the vehicle for several minutes in the D position through all five gears.

32. Check for DTC(s) in the DTCs/Freeze Data in A/T Mode Menu with the HDS.

    *Is DTC P0723 indicated?*

    **YES**—If the PCM was updated, substitute a known-good PCM (see page 14-10), then recheck. If the PCM was substituted, go to step 1.

    **NO**—Go to step 33.

33. Monitor the OBD status for P0723 in the DTCs/Freeze Data in A/T Mode Menu for a pass/fail.

    *Does the result indicate PASSED?*

    **YES**—If the PCM was updated, troubleshooting is complete. If the PCM was substituted, replace the original PCM (see page 11-252). If any other DTCs were indicated on step 32, go to the indicated DTC's troubleshooting.■

    **NO**—If the HDS indicates FAILED, check for poor connections and loose terminals at the output shaft (countershaft) speed sensor and the PCM. If the PCM was updated, substitute a known-good PCM (see page 14-10), then recheck. If the PCM was substituted, go to step 1. If the HDS indicates NOT COMPLETED, return to step 31 and recheck.

34. Clear the DTC with the HDS.

35. Test-drive the vehicle for several minutes in the D position through all five gears.

36. Check for DTC(s) in the DTCs/Freeze Data in A/T Mode Menu with the HDS.

    *Is DTC P0723 indicated?*

    **YES**—Check for poor connections and loose terminals at the output shaft (countershaft) speed sensor and the PCM, then go to step 1.

    **NO**—Go to step 37.

37. Monitor the OBD status for P0723 in the DTCs/Freeze Data in A/T Mode Menu for a pass/fail.

    *Does the result indicate PASSED?*

    **YES**—Troubleshooting is complete. If any other DTCs were indicated on step 36, go to the indicated DTC's troubleshooting.■

    **NO**—If the HDS indicates FAILED, check for poor connections and loose terminals at the output shaft (countershaft) speed sensor and the PCM, then go to step 1. If the HDS indicates NOT COMPLETED, return to step 35 and recheck.

Protected by AR



## DTC Troubleshooting (cont'd)

### DTC P0731: Problem in 1st Clutch and 1st Clutch Hydraulic Circuit

NOTE: Before you troubleshoot, record all freeze data and any on-board snapshot, and review General Troubleshooting Information (see page 14-4).

1. Warm up the engine to normal operating temperature (the radiator fan comes on).

2. Make sure that the transmission is filled to the proper level, and check for fluid leaks.

3. Drain the ATF (see step 3 on page 14-239) through a strainer. Inspect the strainer for metal debris or excessive clutch material.

   *Does the strainer have metal debris or excessive clutch material?*

   **YES**—Replace the transmission, then go to step 9.

   **NO**—Replace the ATF (see step 5 on page 14-239), then go to step 4.

4. Measure the line pressure (see page 14-212).

   *Is the line pressure within the service limits?*

   **YES**—Go to step 5.

   **NO**—Repair the ATF pump and the regulator valve, or replace the transmission, then go to step 9.

5. Measure the 1st clutch pressure (see page 14-212).

   *Is the 1st clutch pressure within the service limits?*

   **YES**—Go to step 6.

   **NO**—Shift valves B and C are stuck. Repair these valves and hydraulic circuit, or replace the transmission, then go to step 9.

6. Clear the DTC with the HDS.

7. Test-drive the vehicle for several minutes under the same conditions as those indicated by the freeze data, or drive in 1st gear in the sequential sportshift mode in the S position at speeds over 10 mph (16 km/h) for 20 seconds. Slow down and stop the wheels.

8. Monitor the OBD status for P0731 in the DTCs/ Freeze Data in A/T Mode Menu for a pass/fail.

   *Does the result indicate FAILED?*

   **YES**—Repair the 1st clutch, or replace the transmission, then go to step 9.

   **NO**—Intermittent failure, the system is OK at this time. If the HDS indicates NOT COMPLETED, return to step 7 and recheck.

9. Clear the DTC with the HDS.

10. Test-drive the vehicle for several minutes under the same conditions as those indicated by the freeze data, or drive in 1st gear in the sequential sportshift mode in the S position at speeds over 10 mph (16 km/h) for 20 seconds. Slow down and stop the wheels.

11. Monitor the OBD status for P0731 in the DTCs/ Freeze Data in A/T Mode Menu for a pass/fail.

    *Does the result indicate PASSED?*

    **YES**—Troubleshooting is complete. ■

    **NO**—If the HDS indicates FAILED, return to step 1 and recheck. If the HDS indicates NOT COMPLETED, return to step 10 and recheck.



BACK

Protected by AR

## **DTC P0732:** Problem in 2nd Clutch and 2nd Clutch Hydraulic Circuit

NOTE: Before you troubleshoot, record all freeze data and any on-board snapshot, and review General Troubleshooting Information (see page 14-4).

1. Warm up the engine to normal operating temperature (the radiator fan comes on).

2. Make sure that the transmission is filled to the proper level, and check for fluid leaks.

3. Drain the ATF (see step 3 on page 14-239) through a strainer. Inspect the strainer for metal debris or excessive clutch material.

   *Does the strainer have metal debris or excessive clutch material?*

   **YES**—Replace the transmission, then go to step 9.

   **NO**—Replace the ATF (see step 5 on page 14-239), then go to step 4.

4. Measure the line pressure (see page 14-212).

   *Is the line pressure within the service limits?*

   **YES**—Go to step 5.

   **NO**—Repair the ATF pump and the regulator valve, or replace the transmission, then go to step 9.

5. Measure the 2nd clutch pressure (see page 14-212).

   *Is the 2nd clutch pressure within the service limits?*

   **YES**—Go to step 6.

   **NO**—Shift valves A, B, and C are stuck. Repair these valves and the hydraulic circuit, or replace the transmission, then go to step 9.

6. Clear the DTC with the HDS.

7. Test-drive the vehicle for several minutes under the same conditions as those indicated by the freeze data, or drive in 2nd gear in the sequential sportshift mode in the S position at speeds over 10 mph (16 km/h) for 20 seconds. Slow down and stop the wheels.

8. Monitor the OBD status for P0732 in the DTCs/ Freeze Data in A/T Mode Menu for a pass/fail.

   *Does the result indicate FAILED?*

   **YES**—Repair the 2nd clutch, or replace the transmission, then go to step 9.

   **NO**—Intermittent failure, the system is OK at this time. If the HDS indicates NOT COMPLETED, return to step 7 and recheck.

9. Clear the DTC with the HDS.

10. Test-drive the vehicle for several minutes under the same conditions as those indicated by the freeze data, or drive in 2nd gear in the sequential sportshift mode in the S position at speeds over 10 mph (16 km/h) for 20 seconds. Slow down and stop the wheels.

11. Monitor the OBD status for P0732 in the DTCs/ Freeze Data in A/T Mode Menu for a pass/fail.

    *Does the result indicate PASSED?*

    **YES**—Troubleshooting is complete. ■

    **NO**—If the HDS indicates FAILED, return to step 1 and recheck. If the HDS indicates NOT COMPLETED, return to step 10 and recheck.

Protected by AR



## DTC Troubleshooting (cont'd)

### DTC P0733: Problem in 3rd Clutch and 3rd Clutch Hydraulic Circuit

NOTE: Before you troubleshoot, record all freeze data and any on-board snapshot, and review General Troubleshooting Information (see page 14-4).

1. Warm up the engine to normal operating temperature (the radiator fan comes on).

2. Make sure that the transmission is filled to the proper level, and check for fluid leaks.

3. Drain the ATF (see step 3 on page 14-239) through a strainer. Inspect the strainer for metal debris or excessive clutch material.

   *Does the strainer have metal debris or excessive clutch material?*

   **YES**—Replace the transmission, then go to step 9.

   **NO**—Replace the ATF (see step 5 on page 14-239), then go to step 4.

4. Measure the line pressure (see page 14-212).

   *Is the line pressure within the service limits?*

   **YES**—Go to step 5.

   **NO**—Repair the ATF pump and the regulator valve, or replace the transmission, then go to step 9.

5. Measure the 3rd clutch pressure (see page 14-212).

   *Is the 3rd clutch pressure within the service limits?*

   **YES**—Go to step 6.

   **NO**—Shift valves A, B, and C are stuck. Repair these valves and the hydraulic circuit, or replace the transmission, then go to step 9.

6. Clear the DTC with the HDS.

7. Test-drive the vehicle for several minutes under the same conditions as those indicated by the freeze data, or drive in 3rd gear in the sequential sportshift mode in the S position at speeds over 10 mph (16 km/h) for 20 seconds. Slow down and stop the wheels.

8. Monitor the OBD status for P0733 in the DTCs/ Freeze Data in A/T Mode Menu for a pass/fail.

   *Does the result indicate FAILED?*

   **YES**—Repair the 3rd clutch, or replace the transmission, then go to step 9.

   **NO**—Intermittent failure, the system is OK at this time. If the HDS indicates NOT COMPLETED, return to step 7 and recheck.

9. Clear the DTC with the HDS.

10. Test-drive the vehicle for several minutes under the same conditions as those indicated by the freeze data, or drive in 3rd gear in the sequential sportshift mode in the S position at speeds over 10 mph (16 km/h) for 20 seconds. Slow down and stop the wheels.

11. Monitor the OBD status for P0733 in the DTCs/ Freeze Data in A/T Mode Menu for a pass/fail.

    *Does the result indicate PASSED?*

    **YES**—Troubleshooting is complete. ■

    **NO**—If the HDS indicates FAILED, return to step 1 and recheck. If the HDS indicates NOT COMPLETED, return to step 10 and recheck.



BACK

Protected by AR

## **DTC P0734:** Problem in 4th Clutch and 4th Clutch Hydraulic Circuit

NOTE: Before you troubleshoot, record all freeze data and any on-board snapshot, and review General Troubleshooting Information (see page 14-4).

1. Warm up the engine to normal operating temperature (the radiator fan comes on).

2. Make sure that the transmission is filled to the proper level, and check for fluid leaks.

3. Drain the ATF (see step 3 on page 14-239) through a strainer. Inspect the strainer for metal debris or excessive clutch material.

   *Does the strainer have metal debris or excessive clutch material?*

   **YES**—Replace the transmission, then go to step 9.

   **NO**—Replace the ATF (see step 5 on page 14-239), then go to step 4.

4. Measure the line pressure (see page 14-212).

   *Is the line pressure within the service limits?*

   **YES**—Go to step 5.

   **NO**—Repair the ATF pump and the regulator valve, or replace the transmission, then go to step 9.

5. Measure the 4th clutch pressure (see page 14-212).

   *Is the 4th clutch pressure within the service limits?*

   **YES**—Go to step 6.

   **NO**—Shift valves A, B, C, and D are stuck. Repair these valves and the hydraulic circuit, or replace the transmission, then go to step 9.

6. Clear the DTC with the HDS.

7. Test-drive the vehicle for several minutes under the same conditions as those indicated by the freeze data, or drive in 4th gear in the sequential sportshift mode in the S position at speeds over 10 mph (16 km/h) for 20 seconds. Slow down and stop the wheels.

8. Monitor the OBD status for P0734 in the DTCs/ Freeze Data in A/T Mode Menu for a pass/fail.

   *Does the result indicate FAILED?*

   **YES**—Repair the 4th clutch, or replace the transmission, then go to step 9.

   **NO**—Intermittent failure, the system is OK at this time. If the HDS indicates NOT COMPLETED, return to step 7 and recheck.

9. Clear the DTC with the HDS.

10. Test-drive the vehicle for several minutes under the same conditions as those indicated by the freeze data, or drive in 4th gear in the sequential sportshift mode in the S position at speeds over 10 mph (16 km/h) for 20 seconds. Slow down and stop the wheels.

11. Monitor the OBD status for P0734 in the DTCs/ Freeze Data in A/T Mode Menu for a pass/fail.

    *Does the result indicate PASSED?*

    **YES**—Troubleshooting is complete. ■

    **NO**—If the HDS indicates FAILED, return to step 1 and recheck. If the HDS indicates NOT COMPLETED, return to step 10 and recheck.

Protected by AR



## DTC Troubleshooting (cont'd)

### DTC P0735: Problem in 5th Clutch and 5th Clutch Hydraulic Circuit

NOTE: Before you troubleshoot, record all freeze data and any on-board snapshot, and review General Troubleshooting Information (see page 14-4).

1. Warm up the engine to normal operating temperature (the radiator fan comes on).

2. Make sure that the transmission is filled to the proper level, and check for fluid leaks.

3. Drain the ATF (see step 3 on page 14-239) through a strainer. Inspect the strainer for metal debris or excessive clutch material.

   *Does the strainer have metal debris or excessive clutch material?*

   **YES**—Replace the transmission, then go to step 9.

   **NO**—Replace the ATF (see step 5 on page 14-239), then go to step 4.

4. Measure the line pressure (see page 14-212).

   *Is the line pressure within the service limits?*

   **YES**—Go to step 5.

   **NO**—Repair the ATF pump and the regulator valve, or replace the transmission, then go to step 9.

5. Measure the 5th clutch pressure (see page 14-212).

   *Is the 5th clutch pressure within the service limits?*

   **YES**—Go to step 6.

   **NO**—Shift valves A, B, C, and D are stuck. Repair these valves and the hydraulic circuit, or replace the transmission, then go to step 9.

6. Clear the DTC with the HDS.

7. Test-drive the vehicle for several minutes under the same conditions as those indicated by the freeze data, or drive in 5th gear in the sequential sportshift mode in the S position at speeds over 10 mph (16 km/h) for 20 seconds. Slow down and stop the wheels.

8. Monitor the OBD status for P0735 in the DTCs/ Freeze Data in A/T Mode Menu for a pass/fail.

   *Does the result indicate FAILED?*

   **YES**—Repair the 5th clutch, or replace the transmission, then go to step 9.

   **NO**—Intermittent failure, the system is OK at this time. If the HDS indicates NOT COMPLETED, return to step 7 and recheck.

9. Clear the DTC with the HDS.

10. Test-drive the vehicle for several minutes under the same conditions as those indicated by the freeze data, or drive in 5th gear in the sequential sportshift mode in the S position at speeds over 10 mph (16 km/h) for 20 seconds. Slow down and stop the wheels.

11. Monitor the OBD status for P0735 in the DTCs/ Freeze Data in A/T Mode Menu for a pass/fail.

    *Does the result indicate PASSED?*

    **YES**—Troubleshooting is complete. ■

    **NO**—If the HDS indicates FAILED, return to step 1 and recheck. If the HDS indicates NOT COMPLETED, return to step 10 and recheck.



BACK

Protected by AR

## **DTC P0741:** Torque Converter Clutch Hydraulic Circuit Stuck OFF

NOTE: Before you troubleshoot, record all freeze data and any on-board snapshot, and review General Troubleshooting Information (see page 14-4).

1. Warm up the engine to normal operating temperature (the radiator fan comes on).

2. Make sure that the transmission is filled to the proper level, and check for fluid leaks.

3. Drain the ATF (see step 3 on page 14-239) through a strainer. Inspect the strainer for metal debris or excessive clutch material.

   *Does the strainer have metal debris or excessive clutch material?*

   **YES**—Replace the transmission, then go to step 11.

   **NO**—Replace the ATF (see step 5 on page 14-239), then go to step 4.

4. Clear the DTC with the HDS.

5. Choose Shift Solenoid D in the Miscellaneous Test Menu, and check that the shift solenoid valve D operates with the HDS.

   *Is a clicking sound heard?*

   **YES**—Go to step 6.

   **NO**—Replace shift solenoid valve D (see page 14-216), then go to step 11.

6. Run the engine until the engine coolant temperature reaches 176 °F (80 °C).

7. Choose Clutch Pressure Control (Linear) Solenoid C in the Miscellaneous Test Menu, and test A/T clutch pressure control solenoid valve C with the HDS.

   *Is the result NORMAL?*

   **YES**—Go to step 8.

   **NO**—Follow the instructions indicated on the HDS by the test result, but if the HDS has not determined the cause of the failure, go to step 10. If any part is replaced, go to step 11.

8. Test-drive the vehicle on a level road with a steady throttle at 55 mph (88 km/h) for 2 minutes.

9. Monitor the OBD status for P0741 in the DTCs/ Freeze Data in A/T Mode Menu for a pass/fail.

   *Does the result indicate FAILED?*

   **YES**—Repair the faulty torque converter clutch mechanism, torque converter clutch hydraulic circuit, lock-up shift valve, or lock-up control valve, or replace the transmission, then go to step 11.

   **NO**—Intermittent failure, the system is OK at this time. If the HDS indicates NOT COMPLETED, return to step 8 and recheck.

10. Inspect A/T clutch pressure control solenoid valve C (see page 14-228).

    *Does A/T clutch pressure control solenoid valve C work properly?*

    **YES**—Repair the hydraulic system related to the lock-up shift valve, lock-up control valve, and lock-up timing valve, or replace the transmission, then go to step 11.

    **NO**—Replace A/T clutch pressure control solenoid valve C, then go to step 11.

11. Clear the DTC with the HDS.

12. Test-drive the vehicle for several minutes under the same conditions as those indicated by the freeze data.

13. Monitor the OBD status for P0741 in the DTCs/ Freeze Data in A/T Mode Menu for a pass/fail.

    *Does the result indicate PASSED?*

    **YES**—Troubleshooting is complete. ■

    **NO**—If the HDS indicates FAILED, return to step 1 and recheck. If the HDS indicates NOT COMPLETED, return to step 12 and recheck.

Protected by AR



## DTC Troubleshooting (cont'd)

### DTC P0746: A/T Clutch Pressure Control Solenoid Valve A Stuck OFF

NOTE: Before you troubleshoot, record all freeze data and any on-board snapshot, and review General Troubleshooting Information (see page 14-4).

1. Warm up the engine to normal operating temperature (the radiator fan comes on).

2. Make sure that the transmission is filled to the proper level, and check for fluid leaks.

3. Drain the ATF (see step 3 on page 14-239) through a strainer. Inspect the strainer for metal debris or excessive clutch material.

   *Does the strainer have metal debris or excessive clutch material?*

   **YES**—Replace the transmission, then go to step 11.

   **NO**—Replace the ATF (see step 5 on page 14-239), then go to step 4.

4. Clear the DTC with the HDS.

5. Test-drive the vehicle in the D position through all five gears at speeds over 12 mph (20 km/h) for more than 20 seconds, then slow down to a stop.

6. Test-drive the vehicle again in the D position through all five gears at speeds over 12 mph (20 km/h) for more than 20 seconds, then slow down to a stop.

7. Monitor the OBD status for P0746 in the DTCs/ Freeze Data in A/T Mode Menu for a pass/fail.

   *Does the result indicate FAILED?*

   **YES**—Go to step 8.

   **NO**—Intermittent failure, the system is OK at this time. If the HDS indicates NOT COMPLETED, return to step 5 and recheck.

8. Clear the DTC with the HDS.

9. Choose Clutch Pressure Control (Linear) Solenoid A in the Miscellaneous Test Menu, and test A/T clutch pressure control solenoid valve A with the HDS.

   *Is the result NORMAL?*

   **YES**—Intermittent failure, the system is OK at this time. If the HDS indicates NOT COMPLETED, return to step 9 and recheck.

   **NO**—Follow the instructions indicated on the HDS by the test result, but if the HDS has not determined the cause of the failure, go to step 10. If any part is replaced, go to step 11.

10. Inspect A/T clutch pressure control solenoid valve A (see page 14-220).

    *Does A/T clutch pressure control solenoid valve A work properly?*

    **YES**—Repair the hydraulic system related with shift valve A, or replace the transmission, then go to step 11.

    **NO**—Replace A/T clutch pressure control solenoid valve A (see page 14-226), then go to step 11.

11. Clear the DTC with the HDS.

12. Test-drive the vehicle in the D position through all five gears at speeds over 12 mph (20 km/h) for more than 20 seconds, then slow down to a stop.

13. Test-drive the vehicle again in the D position through all five gears at speeds over 12 mph (20 km/h) for more than 20 seconds, then slow down to a stop.

14. Monitor the OBD status for P0746 in the DTCs/ Freeze Data in A/T Mode Menu for a pass/fail.

    *Does the result indicate PASSED?*

    **YES**—Troubleshooting is complete. ■

    **NO**—If the HDS indicates FAILED, return to step 1 and recheck. If the HDS indicates NOT COMPLETED, return to step 12 and recheck.



BACK

Protected by AR

## **DTC P0747:** A/T Clutch Pressure Control Solenoid Valve A Stuck ON

NOTE: Before you troubleshoot, record all freeze data and any on-board snapshot, and review General Troubleshooting Information (see page 14-4).

1. Warm up the engine to normal operating temperature (the radiator fan comes on).

2. Make sure that the transmission is filled to the proper level, and check for fluid leaks.

3. Drain the ATF (see step 3 on page 14-239) through a strainer. Inspect the strainer for metal debris or excessive clutch material.

   *Does the strainer have metal debris or excessive clutch material?*

   **YES**—Replace the transmission, then go to step 11.

   **NO**—Replace the ATF (see step 5 on page 14-239), then go to step 4.

4. Clear the DTC with the HDS.

5. Test-drive the vehicle in the D position through all five gears at speeds over 12 mph (20 km/h) for more than 20 seconds, then slow down to a stop.

6. Test-drive the vehicle again in the D position through all five gears at speeds over 12 mph (20 km/h) for more than 20 seconds, then slow down to a stop.

7. Monitor the OBD status for P0747 in the DTCs/ Freeze Data in A/T Mode Menu for a pass/fail.

   *Does the result indicate FAILED?*

   **YES**—Go to step 8.

   **NO**—Intermittent failure, the system is OK at this time. If the HDS indicates NOT COMPLETED, return to step 5 and recheck.

8. Clear the DTC with the HDS.

9. Choose Clutch Pressure Control (Linear) Solenoid A in the Miscellaneous Test Menu, and test A/T clutch pressure control solenoid valve A with the HDS.

   *Is the result NORMAL?*

   **YES**—Intermittent failure, the system is OK at this time. If the HDS indicates NOT COMPLETED, return to step 9 and recheck.

   **NO**—Follow the instructions indicated on the HDS by the test result, but if the HDS has not determined the cause of the failure, go to step 10. If any part is replaced, go to step 11.

10. Inspect A/T clutch pressure control solenoid valve A (see page 14-220).

    *Does A/T clutch pressure control solenoid valve A work properly?*

    **YES**—Repair the hydraulic system related with shift valve A, or replace the transmission, then go to step 11.

    **NO**—Replace A/T clutch pressure control solenoid valve A (see page 14-226), then go to step 11.

11. Clear the DTC with the HDS.

12. Test-drive the vehicle in the D position through all five gears at speeds over 12 mph (20 km/h) for more than 20 seconds, then slow down to a stop.

13. Test-drive the vehicle again in the D position through all five gears at speeds over 12 mph (20 km/h) for more than 20 seconds, then slow down to a stop.

14. Monitor the OBD status for P0747 in the DTCs/ Freeze Data in A/T Mode Menu for a pass/fail.

    *Does the result indicate PASSED?*

    **YES**—Troubleshooting is complete.■

    **NO**—If the HDS indicates FAILED, return to step 1 and recheck. If the HDS indicates NOT COMPLETED, return to step 12 and recheck.

Protected by AR



## DTC Troubleshooting (cont'd)

### DTC P0751: Shift Solenoid Valve A Stuck OFF

NOTE: Before you troubleshoot, record all freeze data and any on-board snapshot, and review General Troubleshooting Information (see page 14-4).

1. Warm up the engine to normal operating temperature (the radiator fan comes on).

2. Make sure that the transmission is filled to the proper level, and check for fluid leaks.

3. Drain the ATF (see step 3 on page 14-239) through a strainer. Inspect the strainer for metal debris or excessive clutch material.

   *Does the strainer have metal debris or excessive clutch material?*

   **YES**—Replace the transmission, then go to step 13.

   **NO**—Replace the ATF (see step 5 on page 14-239), then go to step 4.

4. Clear the DTC with the HDS.

5. Test-drive the vehicle in the D position through all five gears at speeds over 12 mph (20 km/h) for more than 20 seconds, then slow down to a stop.

6. Test-drive the vehicle again in the D position through all five gears at speeds over 12 mph (20 km/h) for more than 20 seconds, then slow down to a stop.

7. Monitor the OBD status for P0751 in the DTCs/ Freeze Data in A/T Mode Menu for a pass/fail.

   *Does the result indicate FAILED?*

   **YES**—Go to step 8.

   **NO**—Intermittent failure, the system is OK at this time. If the HDS indicates NOT COMPLETED, return to step 5 and recheck.

8. Clear the DTC with the HDS.

9. Choose Shift Solenoid A in the Miscellaneous Test Menu, and check that shift solenoid valve A operates with the HDS.

   *Is a clicking sound heard?*

   **YES**—Go to step 10.

   **NO**—Replace shift solenoid valve A (see page 14-216), then go to step 13.

10. Test-drive the vehicle in the D position through all five gears at speeds over 12 mph (20 km/h) for more than 20 seconds, then slow down to a stop.

11. Test-drive the vehicle again in the D position through all five gears at speeds over 12 mph (20 km/h) for more than 20 seconds, then slow down to a stop.

12. Monitor the OBD status for P0751 in the DTCs/ Freeze Data in A/T Mode Menu for a pass/fail.

    *Does the result indicate FAILED?*

    **YES**—Repair shift valve A, or replace the transmission, then go to step 13.

    **NO**—Intermittent failure, the system is OK at this time. If the HDS indicates NOT COMPLETED, return to step 10 and recheck.

13. Clear the DTC with the HDS.

14. Test-drive the vehicle in the D position through all five gears at speeds over 12 mph (20 km/h) for more than 20 seconds, then slow down to a stop.

15. Test-drive the vehicle again in the D position through all five gears at speeds over 12 mph (20 km/h) for more than 20 seconds, then slow down to a stop.

16. Monitor the OBD status for P0751 in the DTCs/ Freeze Data in A/T Mode Menu for a pass/fail.

    *Does the result indicate PASSED?*

    **YES**—Troubleshooting is complete. ■

    **NO**—If the HDS indicates FAILED, return to step 1 and recheck. If the HDS indicates NOT COMPLETED, return to step 14 and recheck.



BACK

Protected by AR

## **DTC P0752:** Shift Solenoid Valve A Stuck ON

NOTE: Before you troubleshoot, record all freeze data and any on-board snapshot, and review General Troubleshooting Information (see page 14-4).

1. Warm up the engine to normal operating temperature (the radiator fan comes on).

2. Make sure that the transmission is filled to the proper level, and check for fluid leaks.

3. Drain the ATF (see step 3 on page 14-239) through a strainer. Inspect the strainer for metal debris or excessive clutch material.

   *Does the strainer have metal debris or excessive clutch material?*

   **YES**—Replace the transmission, then go to step 13.

   **NO**—Replace the ATF (see step 5 on page 14-239), then go to step 4.

4. Clear the DTC with the HDS.

5. Test-drive the vehicle in the D position through all five gears at speeds over 12 mph (20 km/h) for more than 20 seconds, then slow down to a stop.

6. Test-drive the vehicle again in the D position through all five gears at speeds over 12 mph (20 km/h) for more than 20 seconds, then slow down to a stop.

7. Monitor the OBD status for P0752 in the DTCs/ Freeze Data in A/T Mode Menu for a pass/fail.

   *Does the result indicate FAILED?*

   **YES**—Go to step 8.

   **NO**—Intermittent failure, the system is OK at this time. If the HDS indicates NOT COMPLETED, return to step 5 and recheck.

8. Clear the DTC with the HDS.

9. Choose Shift Solenoid A in the Miscellaneous Test Menu, and check that shift solenoid valve A operates with the HDS.

   *Is a clicking sound heard?*

   **YES**—Go to step 10.

   **NO**—Replace shift solenoid valve A (see page 14-216), then go to step 13.

10. Test-drive the vehicle in the D position through all five gears at speeds over 12 mph (20 km/h) for more than 20 seconds, then slow down to a stop.

11. Test-drive the vehicle again in the D position through all five gears at speeds over 12 mph (20 km/h) for more than 20 seconds, then slow down to a stop.

12. Monitor the OBD status for P0752 in the DTCs/ Freeze Data in A/T Mode Menu for a pass/fail.

    *Does the result indicate FAILED?*

    **YES**—Repair shift valve A, or replace the transmission, then go to step 13.

    **NO**—Intermittent failure, the system is OK at this time. If the HDS indicates NOT COMPLETED, return to step 10 and recheck.

13. Clear the DTC with the HDS.

14. Test-drive the vehicle in the D position through all five gears at speeds over 12 mph (20 km/h) for more than 20 seconds, then slow down to a stop.

15. Test-drive the vehicle again in the D position through all five gears at speeds over 12 mph (20 km/h) for more than 20 seconds, then slow down to a stop.

16. Monitor the OBD status for P0752 in the DTCs/ Freeze Data in A/T Mode Menu for a pass/fail.

    *Does the result indicate PASSED?*

    **YES**—Troubleshooting is complete. ■

    **NO**—If the HDS indicates FAILED, return to step 1 and recheck. If the HDS indicates NOT COMPLETED, return to step 14 and recheck.

Protected by AR



## DTC Troubleshooting (cont'd)

### DTC P0756: Shift Solenoid Valve B Stuck OFF

NOTE: Before you troubleshoot, record all freeze data and any on-board snapshot, and review General Troubleshooting Information (see page 14-4).

1. Warm up the engine to normal operating temperature (the radiator fan comes on).

2. Make sure that the transmission is filled to the proper level, and check for fluid leaks.

3. Drain the ATF (see step 3 on page 14-239) through a strainer. Inspect the strainer for metal debris or excessive clutch material.

   *Does the strainer have metal debris or excessive clutch material?*

   **YES**—Replace the transmission, then go to step 13.

   **NO**—Replace the ATF (see step 5 on page 14-239), then go to step 4.

4. Clear the DTC with the HDS.

5. Test-drive the vehicle in the D position through all five gears at speeds over 12 mph (20 km/h) for more than 20 seconds, then slow down to a stop.

6. Test-drive the vehicle again in the D position through all five gears at speeds over 12 mph (20 km/h) for more than 20 seconds, then slow down to a stop.

7. Monitor the OBD status for P0756 in the DTCs/ Freeze Data in A/T Mode Menu for a pass/fail.

   *Does the result indicate FAILED?*

   **YES**—Go to step 8.

   **NO**—Intermittent failure, the system is OK at this time. If the HDS indicates NOT COMPLETED, return to step 5 and recheck.

8. Clear the DTC with the HDS.

9. Choose Shift Solenoid B in the Miscellaneous Test Menu, and check that shift solenoid valve B operates with the HDS.

   *Is a clicking sound heard?*

   **YES**—Go to step 10.

   **NO**—Replace shift solenoid valve B (see page 14-216), then go to step 13.

10. Test-drive the vehicle in the D position through all five gears at speeds over 12 mph (20 km/h) for more than 20 seconds, then slow down to a stop.

11. Test-drive the vehicle again in the D position through all five gears at speeds over 12 mph (20 km/h) for more than 20 seconds, then slow down to a stop.

12. Monitor the OBD status for P0756 in the DTCs/ Freeze Data in A/T Mode Menu for a pass/fail.

    *Does the result indicate FAILED?*

    **YES**—Repair shift valve B, or replace the transmission, then go to step 13.

    **NO**—Intermittent failure, the system is OK at this time. If the HDS indicates NOT COMPLETED, return to step 10 and recheck.

13. Clear the DTC with the HDS.

14. Test-drive the vehicle in the D position through all five gears at speeds over 12 mph (20 km/h) for more than 20 seconds, then slow down to a stop.

15. Test-drive the vehicle again in the D position through all five gears at speeds over 12 mph (20 km/h) for more than 20 seconds, then slow down to a stop.

16. Monitor the OBD status for P0756 in the DTCs/ Freeze Data in A/T Mode Menu for a pass/fail.

    *Does the result indicate PASSED?*

    **YES**—Troubleshooting is complete.■

    **NO**—If the HDS indicates FAILED, return to step 1 and recheck. If the HDS indicates NOT COMPLETED, return to step 14 and recheck.



BACK

Protected by AR

## **DTC P0757:** Shift Solenoid Valve B Stuck ON

NOTE: Before you troubleshoot, record all freeze data and any on-board snapshot, and review General Troubleshooting Information (see page 14-4).

1. Warm up the engine to normal operating temperature (the radiator fan comes on).

2. Make sure that the transmission is filled to the proper level, and check for fluid leaks.

3. Drain the ATF (see step 3 on page 14-239) through a strainer. Inspect the strainer for metal debris or excessive clutch material.

   *Does the strainer have metal debris or excessive clutch material?*

   **YES**—Replace the transmission, then go to step 13.

   **NO**—Replace the ATF (see step 5 on page 14-239), then go to step 4.

4. Clear the DTC with the HDS.

5. Test-drive the vehicle in the D position through all five gears at speeds over 12 mph (20 km/h) for more than 20 seconds, then slow down to a stop.

6. Test-drive the vehicle again in the D position through all five gears at speeds over 12 mph (20 km/h) for more than 20 seconds, then slow down to a stop.

7. Monitor the OBD status for P0757 in the DTCs/ Freeze Data in A/T Mode Menu for a pass/fail.

   *Does the result indicate FAILED?*

   **YES**—Go to step 8.

   **NO**—Intermittent failure, the system is OK at this time. If the HDS indicates NOT COMPLETED, return to step 5 and recheck.

8. Clear the DTC with the HDS.

9. Choose Shift Solenoid B in the Miscellaneous Test Menu, and check that shift solenoid valve B operates with the HDS.

   *Is a clicking sound heard?*

   **YES**—Go to step 10.

   **NO**—Replace shift solenoid valve B (see page 14-216), then go to step 13.

10. Test-drive the vehicle in the D position through all five gears at speeds over 12 mph (20 km/h) for more than 20 seconds, then slow down to a stop.

11. Test-drive the vehicle again in the D position through all five gears at speeds over 12 mph (20 km/h) for more than 20 seconds, then slow down to a stop.

12. Monitor the OBD status for P0757 in the DTCs/ Freeze Data in A/T Mode Menu for a pass/fail.

    *Does the result indicate FAILED?*

    **YES**—Repair shift valve B, or replace the transmission, then go to step 13.

    **NO**—Intermittent failure, the system is OK at this time. If the HDS indicates NOT COMPLETED, return to step 10 and recheck.

13. Clear the DTC with the HDS.

14. Test-drive the vehicle in the D position through all five gears at speeds over 12 mph (20 km/h) for more than 20 seconds, then slow down to a stop.

15. Test-drive the vehicle again in the D position through all five gears at speeds over 12 mph (20 km/h) for more than 20 seconds, then slow down to a stop.

16. Monitor the OBD status for P0757 in the DTCs/ Freeze Data in A/T Mode Menu for a pass/fail.

    *Does the result indicate PASSED?*

    **YES**—Troubleshooting is complete. ■

    **NO**—If the HDS indicates FAILED, return to step 1 and recheck. If the HDS indicates NOT COMPLETED, return to step 14 and recheck.

Protected by AR



## DTC Troubleshooting (cont'd)

### DTC P0761: Shift Solenoid Valve C Stuck OFF

NOTE: Before you troubleshoot, record all freeze data and any on-board snapshot, and review General Troubleshooting Information (see page 14-4).

1. Warm up the engine to normal operating temperature (the radiator fan comes on).

2. Make sure that the transmission is filled to the proper level, and check for fluid leaks.

3. Drain the ATF (see step 3 on page 14-239) through a strainer. Inspect the strainer for metal debris or excessive clutch material.

   *Does the strainer have metal debris or excessive clutch material?*

   **YES**—Replace the transmission, then go to step 13.

   **NO**—Replace the ATF (see step 5 on page 14-239), then go to step 4.

4. Clear the DTC with the HDS.

5. Test-drive the vehicle in the D position through all five gears at speeds over 12 mph (20 km/h) for more than 20 seconds, then slow down to a stop.

6. Test-drive the vehicle again in the D position through all five gears at speeds over 12 mph (20 km/h) for more than 20 seconds, then slow down to a stop.

7. Monitor the OBD status for P0761 in the DTCs/ Freeze Data in A/T Mode Menu for a pass/fail.

   *Does the result indicate FAILED?*

   **YES**—Go to step 8.

   **NO**—Intermittent failure, the system is OK at this time. If the HDS indicates NOT COMPLETED, return to step 5 and recheck.

8. Clear the DTC with the HDS.

9. Choose Shift Solenoid C in the Miscellaneous Test Menu, and check that shift solenoid valve C operates with the HDS.

   *Is a clicking sound heard?*

   **YES**—Go to step 10.

   **NO**—Replace shift solenoid valve C (see page 14-216), then go to step 13.

10. Test-drive the vehicle in the D position through all five gears at speeds over 12 mph (20 km/h) for more than 20 seconds, then slow down to a stop.

11. Test-drive the vehicle again in the D position through all five gears at speeds over 12 mph (20 km/h) for more than 20 seconds, then slow down to a stop.

12. Monitor the OBD status for P0761 in the DTCs/ Freeze Data in A/T Mode Menu for a pass/fail.

    *Does the result indicate FAILED?*

    **YES**—Repair shift valve C, or replace the transmission, then go to step 13.

    **NO**—Intermittent failure, the system is OK at this time. If the HDS indicates NOT COMPLETED, return to step 10 and recheck.

13. Clear the DTC with the HDS.

14. Test-drive the vehicle in the D position through all five gears at speeds over 12 mph (20 km/h) for more than 20 seconds, then slow down to a stop.

15. Test-drive the vehicle again in the D position through all five gears at speeds over 12 mph (20 km/h) for more than 20 seconds, then slow down to a stop.

16. Monitor the OBD status for P0761 in the DTCs/ Freeze Data in A/T Mode Menu for a pass/fail.

    *Does the result indicate PASSED?*

    **YES**—Troubleshooting is complete.■

    **NO**—If the HDS indicates FAILED, return to step 1 and recheck. If the HDS indicates NOT COMPLETED, return to step 14 and recheck.



BACK

Protected by AR

## **DTC P0762:** Shift Solenoid Valve C Stuck ON

NOTE: Before you troubleshoot, record all freeze data and any on-board snapshot, and review General Troubleshooting Information (see page 14-4).

1. Warm up the engine to normal operating temperature (the radiator fan comes on).

2. Make sure that the transmission is filled to the proper level, and check for fluid leaks.

3. Drain the ATF (see step 3 on page 14-239) through a strainer. Inspect the strainer for metal debris or excessive clutch material.

   *Does the strainer have metal debris or excessive clutch material?*

   **YES**—Replace the transmission, then go to step 13.

   **NO**—Replace the ATF (see step 5 on page 14-239), then go to step 4.

4. Clear the DTC with the HDS.

5. Test-drive the vehicle in the D position through all five gears at speeds over 12 mph (20 km/h) for more than 20 seconds, then slow down to a stop.

6. Test-drive the vehicle again in the D position through all five gears at speeds over 12 mph (20 km/h) for more than 20 seconds, then slow down to a stop.

7. Monitor the OBD status for P0762 in the DTCs/ Freeze Data in A/T Mode Menu for a pass/fail.

   *Does the result indicate FAILED?*

   **YES**—Go to step 8.

   **NO**—Intermittent failure, the system is OK at this time. If the HDS indicates NOT COMPLETED, return to step 5 and recheck.

8. Clear the DTC with the HDS.

9. Choose Shift Solenoid C in the Miscellaneous Test Menu, and check that shift solenoid valve C operates with the HDS.

   *Is a clicking sound heard?*

   **YES**—Go to step 10.

   **NO**—Replace shift solenoid valve C (see page 14-216), then go to step 13.

10. Test-drive the vehicle in the D position through all five gears at speeds over 12 mph (20 km/h) for more than 20 seconds, then slow down to a stop.

11. Test-drive the vehicle again in the D position through all five gears at speeds over 12 mph (20 km/h) for more than 20 seconds, then slow down to a stop.

12. Monitor the OBD status for P0762 in the DTCs/ Freeze Data in A/T Mode Menu for a pass/fail.

    *Does the result indicate FAILED?*

    **YES**—Repair shift valve C, or replace the transmission, then go to step 13.

    **NO**—Intermittent failure, the system is OK at this time. If the HDS indicates NOT COMPLETED, return to step 10 and recheck.

13. Clear the DTC with the HDS.

14. Test-drive the vehicle in the D position through all five gears at speeds over 12 mph (20 km/h) for more than 20 seconds, then slow down to a stop.

15. Test-drive the vehicle again in the D position through all five gears at speeds over 12 mph (20 km/h) for more than 20 seconds, then slow down to a stop.

16. Monitor the OBD status for P0762 in the DTCs/ Freeze Data in A/T Mode Menu for a pass/fail.

    *Does the result indicate PASSED?*

    **YES**—Troubleshooting is complete. ■

    **NO**—If the HDS indicates FAILED, return to step 1 and recheck. If the HDS indicates NOT COMPLETED, return to step 14 and recheck.

Protected by AR



## DTC Troubleshooting (cont'd)

### **DTC P0766:** Shift Solenoid Valve D Stuck OFF

NOTE: Before you troubleshoot, record all freeze data and any on-board snapshot, and review General Troubleshooting Information (see page 14-4).

1. Warm up the engine to normal operating temperature (the radiator fan comes on).

2. Make sure that the transmission is filled to the proper level, and check for fluid leaks.

3. Drain the ATF (see step 3 on page 14-239) through a strainer. Inspect the strainer for metal debris or excessive clutch material.

   *Does the strainer have metal debris or excessive clutch material?*

   **YES**—Replace the transmission, then go to step 13.

   **NO**—Replace the ATF (see step 5 on page 14-239), then go to step 4.

4. Clear the DTC with the HDS.

5. Test-drive the vehicle in the D position through all five gears at speeds over 12 mph (20 km/h) for more than 20 seconds, then slow down to a stop.

6. Test-drive the vehicle again in the D position through all five gears at speeds over 12 mph (20 km/h) for more than 20 seconds, then slow down to a stop.

7. Monitor the OBD status for P0766 in the DTCs/ Freeze Data in A/T Mode Menu for a pass/fail.

   *Does the result indicate FAILED?*

   **YES**—Go to step 8.

   **NO**—Intermittent failure, the system is OK at this time. If the HDS indicates NOT COMPLETED, return to step 5 and recheck.

8. Clear the DTC with the HDS.

9. Choose Shift Solenoid D in the Miscellaneous Test Menu, and check that shift solenoid valve D operates with the HDS.

   *Is a clicking sound heard?*

   **YES**—Go to step 10.

   **NO**—Replace shift solenoid valve D (see page 14-216), then go to step 13.

10. Test-drive the vehicle in the D position through all five gears at speeds over 12 mph (20 km/h) for more than 20 seconds, then slow down to a stop.

11. Test-drive the vehicle again in the D position through all five gears at speeds over 12 mph (20 km/h) for more than 20 seconds, then slow down to a stop.

12. Monitor the OBD status for P0766 in the DTCs/ Freeze Data in A/T Mode Menu for a pass/fail.

    *Does the result indicate FAILED?*

    **YES**—Repair shift valve D, or replace the transmission, then go to step 13.

    **NO**—Intermittent failure, the system is OK at this time. If the HDS indicates NOT COMPLETED, return to step 10 and recheck.

13. Clear the DTC with the HDS.

14. Test-drive the vehicle in the D position through all five gears at speeds over 12 mph (20 km/h) for more than 20 seconds, then slow down to a stop.

15. Test-drive the vehicle again in the D position through all five gears at speeds over 12 mph (20 km/h) for more than 20 seconds, then slow down to a stop.

16. Monitor the OBD status for P0766 in the DTCs/ Freeze Data in A/T Mode Menu for a pass/fail.

    *Does the result indicate PASSED?*

    **YES**—Troubleshooting is complete. ■

    **NO**—If the HDS indicates FAILED, return to step 1 and recheck. If the HDS indicates NOT COMPLETED, return to step 14 and recheck.



BACK

Protected by AR

## **DTC P0767:** Shift Solenoid Valve D Stuck ON

NOTE: Before you troubleshoot, record all freeze data and any on-board snapshot, and review General Troubleshooting Information (see page 14-4).

1. Warm up the engine to normal operating temperature (the radiator fan comes on).

2. Make sure that the transmission is filled to the proper level, and check for fluid leaks.

3. Drain the ATF (see step 3 on page 14-239) through a strainer. Inspect the strainer for metal debris or excessive clutch material.

   *Does the strainer have metal debris or excessive clutch material?*

   **YES**—Replace the transmission, then go to step 13.

   **NO**—Replace the ATF (see step 5 on page 14-239), then go to step 4.

4. Clear the DTC with the HDS.

5. Test-drive the vehicle in the D position through all five gears at speeds over 12 mph (20 km/h) for more than 20 seconds, then slow down to a stop.

6. Test-drive the vehicle again in the D position through all five gears at speeds over 12 mph (20 km/h) for more than 20 seconds, then slow down to a stop.

7. Monitor the OBD status for P0767 in the DTCs/ Freeze Data in A/T Mode Menu for a pass/fail.

   *Does the result indicate FAILED?*

   **YES**—Go to step 8.

   **NO**—Intermittent failure, the system is OK at this time. If the HDS indicates NOT COMPLETED, return to step 5 and recheck.

8. Clear the DTC with the HDS.

9. Choose Shift Solenoid D in the Miscellaneous Test Menu, and check that shift solenoid valve D operates with the HDS.

   *Is a clicking sound heard?*

   **YES**—Go to step 10.

   **NO**—Replace shift solenoid valve D (see page 14-216), then go to step 13.

10. Test-drive the vehicle in the D position through all five gears at speeds over 12 mph (20 km/h) for more than 20 seconds, then slow down to a stop.

11. Test-drive the vehicle again in the D position through all five gears at speeds over 12 mph (20 km/h) for more than 20 seconds, then slow down to a stop.

12. Monitor the OBD status for P0767 in the DTCs/ Freeze Data in A/T Mode Menu for a pass/fail.

    *Does the result indicate FAILED?*

    **YES**—Repair shift valve D, or replace the transmission, then go to step 13.

    **NO**—Intermittent failure, the system is OK at this time. If the HDS indicates NOT COMPLETED, return to step 10 and recheck.

13. Clear the DTC with the HDS.

14. Test-drive the vehicle in the D position through all five gears at speeds over 12 mph (20 km/h) for more than 20 seconds, then slow down to a stop.

15. Test-drive the vehicle again in the D position through all five gears at speeds over 12 mph (20 km/h) for more than 20 seconds, then slow down to a stop.

16. Monitor the OBD status for P0767 in the DTCs/ Freeze Data in A/T Mode Menu for a pass/fail.

    *Does the result indicate PASSED?*

    **YES**—Troubleshooting is complete. ■

    **NO**—If the HDS indicates FAILED, return to step 1 and recheck. If the HDS indicates NOT COMPLETED, return to step 14 and recheck.

Protected by AR



## DTC Troubleshooting (cont'd)

### DTC P0776: A/T Clutch Pressure Control Solenoid Valve B Stuck OFF

NOTE: Before you troubleshoot, record all freeze data and any on-board snapshot, and review General Troubleshooting Information (see page 14-4).

1. Warm up the engine to normal operating temperature (the radiator fan comes on).

2. Make sure that the transmission is filled to the proper level, and check for fluid leaks.

3. Drain the ATF (see step 3 on page 14-239) through a strainer. Inspect the strainer for metal debris or excessive clutch material.

   *Does the strainer have metal debris or excessive clutch material?*

   **YES**—Replace the transmission, then go to step 11.

   **NO**—Replace the ATF (see step 5 on page 14-239), then go to step 4.

4. Clear the DTC with the HDS.

5. Test-drive the vehicle in the D position through all five gears at speeds over 12 mph (20 km/h) for more than 20 seconds, then slow down to a stop.

6. Test-drive the vehicle again in the D position through all five gears at speeds over 12 mph (20 km/h) for more than 20 seconds, then slow down to a stop.

7. Monitor the OBD status for P0776 in the DTCs/ Freeze Data in A/T Mode Menu for a pass/fail.

   *Does the result indicate FAILED?*

   **YES**—Go to step 8.

   **NO**—Intermittent failure, the system is OK at this time. If the HDS indicates NOT COMPLETED, return to step 5 and recheck.

8. Clear the DTC with the HDS.

9. Choose Clutch Pressure Control (Linear) Solenoid B in the Miscellaneous Test Menu, and test A/T clutch pressure control solenoid valve B with the HDS.

   *Is the result NORMAL?*

   **YES**—Intermittent failure, the system is OK at this time. If the HDS indicates NOT COMPLETED, return to step 9 and recheck.

   **NO**—Follow the instructions indicated on the HDS by the test result, but if the HDS has not determined the cause of the failure, go to step 10. If any part is replaced, go to step 11.

10. Inspect A/T clutch pressure control solenoid valve B (see page 14-223).

    *Does A/T clutch pressure control solenoid valve B work properly?*

    **YES**—Repair the hydraulic system related with shift valve B, or replace the transmission, then go to step 11.

    **NO**—Replace A/T clutch pressure control solenoid valve B (see page 14-226), then go to step 11.

11. Clear the DTC with the HDS.

12. Test-drive the vehicle in the D position through all five gears at speeds over 12 mph (20 km/h) for more than 20 seconds, then slow down to a stop.

13. Test-drive the vehicle again in the D position through all five gears at speeds over 12 mph (20 km/h) for more than 20 seconds, then slow down to a stop.

14. Monitor the OBD status for P0776 in the DTCs/ Freeze Data in A/T Mode Menu for a pass/fail.

    *Does the result indicate PASSED?*

    **YES**—Troubleshooting is complete. ■

    **NO**—If the HDS indicates FAILED, return to step 1 and recheck. If the HDS indicates NOT COMPLETED, return to step 12 and recheck.



BACK

Protected by AR

## **DTC P0777:** A/T Clutch Pressure Control Solenoid Valve B Stuck ON

NOTE: Before you troubleshoot, record all freeze data and any on-board snapshot, and review General Troubleshooting Information (see page 14-4).

1. Warm up the engine to normal operating temperature (the radiator fan comes on).

2. Make sure that the transmission is filled to the proper level, and check for fluid leaks.

3. Drain the ATF (see step 3 on page 14-239) through a strainer. Inspect the strainer for metal debris or excessive clutch material.

   *Does the strainer have metal debris or excessive clutch material?*

   **YES**—Replace the transmission, then go to step 11.

   **NO**—Replace the ATF (see step 5 on page 14-239), then go to step 4.

4. Clear the DTC with the HDS.

5. Test-drive the vehicle in the D position through all five gears at speeds over 12 mph (20 km/h) for more than 20 seconds, then slow down to a stop.

6. Test-drive the vehicle again in the D position through all five gears at speeds over 12 mph (20 km/h) for more than 20 seconds, then slow down to a stop.

7. Monitor the OBD status for P0777 in the DTCs/ Freeze Data in A/T Mode Menu for a pass/fail.

   *Does the result indicate FAILED?*

   **YES**—Go to step 8.

   **NO**—Intermittent failure, the system is OK at this time. If the HDS indicates NOT COMPLETED, return to step 5 and recheck.

8. Clear the DTC with the HDS.

9. Choose Clutch Pressure Control (Linear) Solenoid B in the Miscellaneous Test Menu, and test A/T clutch pressure control solenoid valve B with the HDS.

   *Is the result NORMAL?*

   **YES**—Intermittent failure, the system is OK at this time. If the HDS indicates NOT COMPLETED, return to step 9 and recheck.

   **NO**—Follow the instructions indicated on the HDS by the test result, but if the HDS has not determined the cause of the failure, go to step 10. If any part is replaced, go to step 11.

10. Inspect A/T clutch pressure control solenoid valve B (see page 14-223).

    *Does A/T clutch pressure control solenoid valve B work properly?*

    **YES**—Repair the hydraulic system related with shift valve B, or replace the transmission, then go to step 11.

    **NO**—Replace A/T clutch pressure control solenoid valve B (see page 14-226), then go to step 11.

11. Clear the DTC with the HDS.

12. Test-drive the vehicle in the D position through all five gears at speeds over 12 mph (20 km/h) for more than 20 seconds, then slow down to a stop.

13. Test-drive the vehicle again in the D position through all five gears at speeds over 12 mph (20 km/h) for more than 20 seconds, then slow down to a stop.

14. Monitor the OBD status for P0777 in the DTCs/ Freeze Data in A/T Mode Menu for a pass/fail.

    *Does the result indicate PASSED?*

    **YES**—Troubleshooting is complete.■

    **NO**—If the HDS indicates FAILED, return to step 1 and recheck. If the HDS indicates NOT COMPLETED, return to step 12 and recheck.

Protected by AR



## DTC Troubleshooting (cont'd)

### DTC P0796: A/T Clutch Pressure Control Solenoid Valve C Stuck OFF

NOTE: Before you troubleshoot, record all freeze data and any on-board snapshot, and review General Troubleshooting Information (see page 14-4).

1. Warm up the engine to normal operating temperature (the radiator fan comes on).

2. Make sure that the transmission is filled to the proper level, and check for fluid leaks.

3. Drain the ATF (see step 3 on page 14-239) through a strainer. Inspect the strainer for metal debris or excessive clutch material.

   *Does the strainer have metal debris or excessive clutch material?*

   **YES**—Replace the transmission, then go to step 11.

   **NO**—Replace the ATF (see step 5 on page 14-239), then go to step 4.

4. Clear the DTC with the HDS.

5. Test-drive the vehicle in the D position through all five gears at speeds over 12 mph (20 km/h) for more than 20 seconds, then slow down to a stop.

6. Test-drive the vehicle again in the D position through all five gears at speeds over 12 mph (20 km/h) for more than 20 seconds, then slow down to a stop.

7. Monitor the OBD status for P0796 in the DTCs/ Freeze Data in A/T Mode Menu for a pass/fail.

   *Does the result indicate FAILED?*

   **YES**—Go to step 8.

   **NO**—Intermittent failure, the system is OK at this time. If the HDS indicates NOT COMPLETED, return to step 5 and recheck.

8. Clear the DTC with the HDS.

9. Choose Clutch Pressure Control (Linear) Solenoid C in the Miscellaneous Test Menu, and test A/T clutch pressure control solenoid valve C with the HDS.

   *Is the result NORMAL?*

   **YES**—Intermittent failure, the system is OK at this time. If the HDS indicates NOT COMPLETED, return to step 9 and recheck.

   **NO**—Follow the instructions indicated on the HDS by the test result, but if the HDS has not determined the cause of the failure, go to step 10. If any part is replaced, go to step 11.

10. Inspect A/T clutch pressure control solenoid valve C (see page 14-228).

    *Does A/T clutch pressure control solenoid valve C work properly?*

    **YES**—Repair the hydraulic system related with shift valve C, or replace the transmission, then go to step 11.

    **NO**—Replace A/T clutch pressure control solenoid valve C (see page 14-231), then go to step 11.

11. Clear the DTC with the HDS.

12. Test-drive the vehicle in the D position through all five gears at speeds over 12 mph (20 km/h) for more than 20 seconds, then slow down to a stop.

13. Test-drive the vehicle again in the D position through all five gears at speeds over 12 mph (20 km/h) for more than 20 seconds, then slow down to a stop.

14. Monitor the OBD status for P0796 in the DTCs/ Freeze Data in A/T Mode Menu for a pass/fail.

    *Does the result indicate PASSED?*

    **YES**—Troubleshooting is complete. ■

    **NO**—If the HDS indicates FAILED, return to step 1 and recheck. If the HDS indicates NOT COMPLETED, return to step 12 and recheck.



BACK

Protected by AR

## **DTC P0797:** A/T Clutch Pressure Control Solenoid Valve C Stuck ON

NOTE: Before you troubleshoot, record all freeze data and any on-board snapshot, and review General Troubleshooting Information (see page 14-4).

1. Warm up the engine to normal operating temperature (the radiator fan comes on).

2. Make sure that the transmission is filled to the proper level, and check for fluid leaks.

3. Drain the ATF (see step 3 on page 14-239) through a strainer. Inspect the strainer for metal debris or excessive clutch material.

   *Does the strainer have metal debris or excessive clutch material?*

   **YES**—Replace the transmission, then go to step 11.

   **NO**—Replace the ATF (see step 5 on page 14-239), then go to step 4.

4. Clear the DTC with the HDS.

5. Test-drive the vehicle in the D position through all five gears at speeds over 12 mph (20 km/h) for more than 20 seconds, then slow down to a stop.

6. Test-drive the vehicle again in the D position through all five gears at speeds over 12 mph (20 km/h) for more than 20 seconds, then slow down to a stop.

7. Monitor the OBD status for P0797 in the DTCs/ Freeze Data in A/T Mode Menu for a pass/fail.

   *Does the result indicate FAILED?*

   **YES**—Go to step 8.

   **NO**—Intermittent failure, the system is OK at this time. If the HDS indicates NOT COMPLETED, return to step 5 and recheck.

8. Clear the DTC with the HDS.

9. Choose Clutch Pressure Control (Linear) Solenoid C in the Miscellaneous Test Menu, and test A/T clutch pressure control solenoid valve C with the HDS.

   *Is the result NORMAL?*

   **YES**—Intermittent failure, the system is OK at this time. If the HDS indicates NOT COMPLETED, return to step 9 and recheck.

   **NO**—Follow the instructions indicated on the HDS by the test result, but if the HDS has not determined the cause of the failure, go to step 10. If any part is replaced, go to step 11.

10. Inspect A/T clutch pressure control solenoid valve C (see page 14-228).

    *Does A/T clutch pressure control solenoid valve C work properly?*

    **YES**—Repair the hydraulic system related with shift valve C, or replace the transmission, then go to step 11.

    **NO**—Replace A/T clutch pressure control solenoid valve C (see page 14-231), then go to step 11.

11. Clear the DTC with the HDS.

12. Test-drive the vehicle in the D position through all five gears at speeds over 12 mph (20 km/h) for more than 20 seconds, then slow down to a stop.

13. Test-drive the vehicle again in the D position through all five gears at speeds over 12 mph (20 km/h) for more than 20 seconds, then slow down to a stop.

14. Monitor the OBD status for P0797 in the DTCs/ Freeze Data in A/T Mode Menu for a pass/fail.

    *Does the result indicate PASSED?*

    **YES**—Troubleshooting is complete.■

    **NO**—If the HDS indicates FAILED, return to step 1 and recheck. If the HDS indicates NOT COMPLETED, return to step 12 and recheck.

Protected by AR



## DTC Troubleshooting (cont'd)

### DTC P0812: Open in Transmission Range Switch ATP R Switch Circuit

NOTE:
- Before you troubleshoot, record all freeze data and any on-board snapshot, and review General Troubleshooting Information (see page 14-4).
- This code is caused by an electrical circuit problem and cannot be caused by a mechanical problem in the transmission.

1. Turn the ignition switch ON (II).

2. Shift to the R position, and verify the A/T R SWITCH signal with the HDS in the A/T data list.

   *Is the A/T R SWITCH ON?*

   **YES**—Intermittent failure, the system is OK at this time.■

   **NO**—Go to step 3.

3. Turn the ignition switch OFF.

4. Disconnect the transmission range switch connector.

5. Check for continuity between transmission range switch connector terminal No. 5 and body ground.

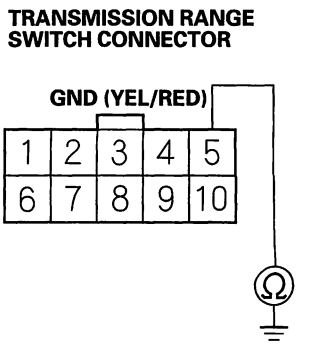


Wire side of female terminals

*Is there continuity?*

**YES**—Go to step 6.

**NO**—Repair open in the wire between transmission range switch connector terminal No. 5 and ground (G101), or repair poor ground (G101), then go to step 13.



BACK

Protected by AR

6. Turn the ignition switch ON (II).

7. Measure the voltage between transmission range switch connector terminals No. 3 and No. 5.

**TRANSMISSION RANGE SWITCH CONNECTOR**

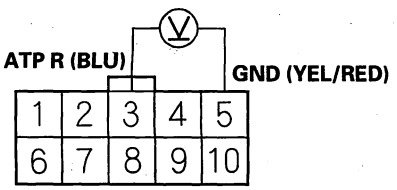


Wire side of female terminals

*Is there voltage?*

**YES**—Go to step 8.

**NO**—Repair open in the wire between PCM connector terminal B14 and the transmission range switch, then go to step 13.

8. Check for continuity between transmission range switch connector terminals No. 3 and No. 5 while the shift lever is in the R position, and when the shift lever is shifted to any position other than R.

**TRANSMISSION RANGE SWITCH CONNECTOR**

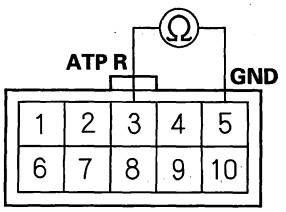


Terminal side of male terminals

*Is there continuity while the shift lever is in the R position, and no continuity when the shift lever is shifted to any position other than R?*

**YES**—Check for poor connections and loose terminals at the transmission range switch, the subharness connector, and the PCM. If the connections are OK, go to step 9.

**NO**—Replace the transmission range switch (see page 14-292), then go to step 9.

(cont'd)

Protected by AR



## DTC Troubleshooting (cont'd)

9. Update the A/T software in the PCM if it does not have the latest software (see page 14-8), or substitute a known-good PCM (see page 14-10).

10. Test-drive the vehicle in the R position at speeds below 3 mph (5 km/h) for more than 2 seconds, then increase the speed and test-drive at speeds over 3 mph (5 km/h) for more than 2 seconds. Slow down and stop the wheels.

11. Check for DTC(s) in the DTCs/Freeze Data in A/T Mode Menu with the HDS.

    *Is DTC P0812 indicated?*

    **YES**—If the PCM was updated, substitute a known-good PCM (see page 14-10), then recheck. If the PCM was substituted, go to step 1.

    **NO**—Go to step 12.

12. Monitor the OBD status for P0812 in the DTCs/Freeze Data in A/T Mode Menu for a pass/fail.

    *Does the result indicate PASSED?*

    **YES**—If the PCM was updated, troubleshooting is complete. If the PCM was substituted, replace the original PCM (see page 11-252). If any other DTCs were indicated on step 11, go to the indicated DTC's troubleshooting.■

    **NO**—If the HDS indicates FAILED, check for poor connections and loose terminals at the transmission range switch, the subharness connector, and the PCM. If the PCM was updated, substitute a known-good PCM (see page 14-10), then recheck. If the PCM was substituted, go to step 1. If the HDS indicates NOT COMPLETED, return to step 10 and recheck.

13. Clear the DTC with the HDS.

14. Test-drive the vehicle in the R position at speeds below 3 mph (5 km/h) for more than 2 seconds, then increase the speed and test-drive at speeds over 3 mph (5 km/h) for more than 2 seconds. Slow down and stop the wheels.

15. Check for DTC(s) in the DTCs/Freeze Data in A/T Mode Menu with the HDS.

    *Is DTC P0812 indicated?*

    **YES**—Check for poor connections and loose terminals at the transmission range switch and the PCM, then go to step 1.

    **NO**—Go to step 16.

16. Monitor the OBD status for P0812 in the DTCs/Freeze Data in A/T Mode Menu for a pass/fail.

    *Does the result indicate PASSED?*

    **YES**—Troubleshooting is complete. If any other DTCs were indicated on step 15, go to the indicated DTC's troubleshooting.■

    **NO**—If the HDS indicates FAILED, check for poor connections and loose terminals at the transmission range switch, the subharness connector, and the PCM, then go to step 1. If the HDS indicates NOT COMPLETED, return to step 14 and recheck.



BACK

Protected by AR

## **DTC P0842:** Short in 2nd Clutch Transmission Fluid Pressure Switch Circuit, or 2nd Clutch Transmission Fluid Pressure Switch Stuck ON

NOTE:
- Before you troubleshoot, record all freeze data and any on-board snapshot, and review General Troubleshooting Information (see page 14-4).
- This code is caused by an electrical circuit problem and cannot be caused by a mechanical problem in the transmission.

1. Clear the DTC with the HDS.

2. Check the 2nd PRESSURE SWITCH signal with the HDS in the A/T data list when not in 2nd gear.

   *Is the 2nd PRESSURE SWITCH OFF?*

   **YES**—Go to step 3.

   **NO**—Go to step 6.

3. Start the engine, and warm it up to normal operating temperature (the radiator fan comes on).

4. Drive the vehicle in 2nd gear in the sequential sportshift mode in the S position for more than 5 seconds, then upshift to 3rd gear, and drive in 3rd gear for more than 5 seconds. Slow down and stop the wheels.

5. Monitor the OBD status for P0842 in the DTCs/ Freeze Data in A/T Mode Menu for a pass/fail.

   *Does the result indicate FAILED?*

   **YES**—Go to step 6.

   **NO**—Intermittent failure, the system is OK at this time. Check the OP2SW (BLU/RED) wire for an intermittent short to ground between the 2nd clutch transmission fluid pressure switch and the PCM. If the HDS indicates NOT COMPLETED, return to step 4 and recheck.

6. Turn the ignition switch OFF.

7. Disconnect the 2nd clutch transmission fluid pressure switch connector.

8. Turn the ignition switch ON (II).

9. Check the 2nd PRESSURE SWITCH signal with the HDS in the A/T data list.

   *Is the 2nd PRESSURE SWITCH OFF?*

   **YES**—Replace the 2nd clutch transmission fluid pressure switch (see page 14-234), then go to step 18.

   **NO**—Go to step 10.

10. Turn the ignition switch OFF.

11. Jump the SCS line with the HDS.

12. Disconnect PCM connector B (44P).

13. Check for continuity between PCM connector terminal B8 and body ground.

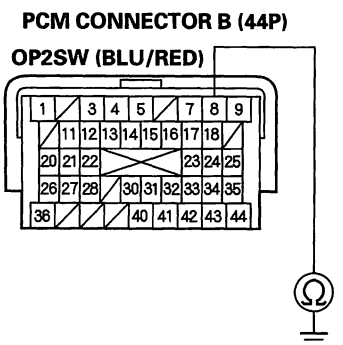


Terminal side of female terminals

*Is there continuity?*

**YES**—Repair short in the wire between PCM connector terminal B8 and the 2nd clutch transmission fluid pressure switch, then go to step 18.

**NO**—Go to step 14.

(cont'd)

Protected by AR



## DTC Troubleshooting (cont'd)

14. Update the A/T software in the PCM if it does not have the latest software (see page 14-8), or substitute a known-good PCM (see page 14-10).

15. Drive the vehicle in 2nd gear in the sequential sportshift mode in the S position for more than 5 seconds, then upshift to 3rd gear, and drive in 3rd gear for more than 5 seconds. Slow down and stop the wheels.

16. Check for DTC(s) in the DTCs/Freeze Data in A/T Mode Menu with the HDS.

    *Is DTC P0842 indicated?*

    **YES**—If the PCM was updated, substitute a known-good PCM (see page 14-10), then recheck. If the PCM was substituted, go to step 1.

    **NO**—Go to step 17.

17. Monitor the OBD status for P0842 in the DTCs/Freeze Data in A/T Mode Menu for a pass/fail.

    *Does the result indicate PASSED?*

    **YES**—If the PCM was updated, troubleshooting is complete. If the PCM was substituted, replace the original PCM (see page 11-252). If any other DTCs were indicated on step 16, go to the indicated DTC's troubleshooting.■

    **NO**—If the HDS indicates FAILED, check for poor connections and loose terminals at the 2nd clutch transmission fluid pressure switch and the PCM. If the PCM was updated, substitute a known-good PCM (see page 14-10), then recheck. If the PCM was substituted, go to step 1. If the HDS indicates NOT COMPLETED, return to step 15 and recheck.

18. Clear the DTC with the HDS.

19. Drive the vehicle in 2nd gear in the sequential sportshift mode in the S position for more than 5 seconds, then upshift to 3rd gear, and drive in 3rd gear for more than 5 seconds. Slow down and stop the wheels.

20. Check for DTC(s) in the DTCs/Freeze Data in A/T Mode Menu with the HDS.

    *Is DTC P0842 indicated?*

    **YES**—Check for poor connections and loose terminals at the 2nd clutch transmission fluid pressure switch and the PCM, then go to step 1.

    **NO**—Go to step 21.

21. Monitor the OBD status for P0842 in the DTCs/Freeze Data in A/T Mode Menu for a pass/fail.

    *Does the result indicate PASSED?*

    **YES**—Troubleshooting is complete. If any other DTCs were indicated on step 20, go to the indicated DTC's troubleshooting.■

    **NO**—If the HDS indicates FAILED, check for poor connections and loose terminals at the 2nd clutch transmission fluid pressure switch and the PCM, then go to step 1. If the HDS indicates NOT COMPLETED, return to step 19 and recheck.



BACK

Protected by AR

## **DTC P0843:** Open in 2nd Clutch Transmission Fluid Pressure Switch Circuit, or 2nd Clutch Transmission Fluid Pressure Switch Stuck OFF

NOTE:
- Before you troubleshoot, record all freeze data and any on-board snapshot, and review General Troubleshooting Information (see page 14-4).
- This code is caused by an electrical circuit problem and cannot be caused by a mechanical problem in the transmission.

1. Clear the DTC with the HDS.

2. Start the engine, and warm it up to normal operating temperature (the radiator fan comes on).

3. Shift the shift lever into the S position while pressing the brake pedal, upshift to 2nd gear by pulling the paddle shifter + (upshift switch), and verify with the HDS in the A/T data list that the SHIFT COMMAND indicates 2nd.

4. Check the 2nd PRESSURE SWITCH signal with the HDS in the A/T data list.

   *Is the 2nd PRESSURE SWITCH ON?*

   **YES**—Go to step 5.

   **NO**—Go to step 7.

5. Drive the vehicle in 2nd gear in the sequential sportshift mode in the S position for more than 5 seconds, then upshift to 3rd gear, and drive in 3rd gear for more than 5 seconds. Slow down and stop the wheels.

6. Monitor the OBD status for P0843 in the DTCs/ Freeze Data in A/T Mode Menu for a pass/fail.

   *Does the result indicate FAILED?*

   **YES**—Go to step 7.

   **NO**—Intermittent failure, the system is OK at this time. Check for poor connections and loose terminals at the 2nd clutch transmission fluid pressure switch and the PCM. If the HDS indicates NOT COMPLETED, return to step 5 and recheck.

(cont'd)

Protected by AR



## DTC Troubleshooting (cont'd)

7. Turn the ignition switch OFF.

8. Disconnect the 2nd clutch transmission fluid pressure switch connector.

9. Turn the ignition switch ON (II).

10. Measure the voltage between the 2nd clutch transmission fluid pressure switch connector terminal and body ground.

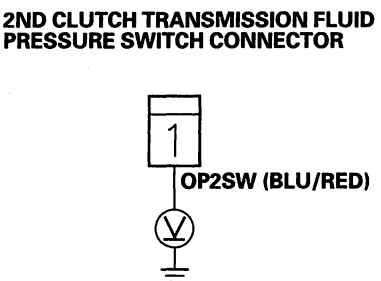


Wire side of female terminals

*Is there about 5 V?*

**YES**—Replace the 2nd clutch transmission fluid pressure switch (see page 14-234), then go to step 19.

**NO**—Go to step 11.

11. Turn the ignition switch OFF.

12. Jump the SCS line with the HDS.

13. Disconnect PCM connector B (44P).

14. Check for continuity between PCM connector terminal B8 and the 2nd clutch transmission fluid pressure switch connector terminal.

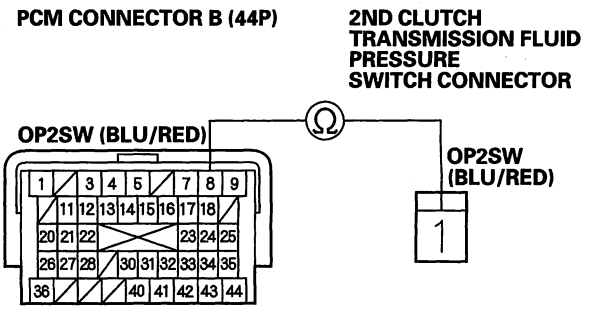


Terminal side of female terminals

Wire side of female terminals

*Is there continuity?*

**YES**—Check for poor connections and loose terminals at the 2nd clutch transmission fluid pressure switch and the PCM. If the connections are OK, go to step 15.

**NO**—Repair open in the wire between PCM connector terminal B8 and the 2nd clutch transmission fluid pressure switch, then go to step 19.



BACK

Protected by AR

15. Update the A/T software in the PCM if it does not have the latest software (see page 14-8), or substitute a known-good PCM (see page 14-10).

16. Drive the vehicle in 2nd gear in the sequential sportshift mode in the S position for more than 5 seconds, then upshift to 3rd gear, and drive in 3rd gear for more than 5 seconds. Slow down and stop the wheels.

17. Check for DTC(s) in the DTCs/Freeze Data in A/T Mode Menu with the HDS.

    *Is DTC P0843 indicated?*

    **YES**—If the PCM was updated, substitute a known-good PCM (see page 14-10), then recheck. If the PCM was substituted, go to step 1.

    **NO**—Go to step 18.

18. Monitor the OBD status for P0843 in the DTCs/Freeze Data in A/T Mode Menu for a pass/fail.

    *Does the result indicate PASSED?*

    **YES**—If the PCM was updated, troubleshooting is complete. If the PCM was substituted, replace the original PCM (see page 11-252). If any other DTCs were indicated on step 17, go to the indicated DTC's troubleshooting.■

    **NO**—If the HDS indicates FAILED, check for poor connections and loose terminals at the 2nd clutch transmission fluid pressure switch and the PCM. If the PCM was updated, substitute a known-good PCM (see page 14-10), then recheck. If the PCM was substituted, go to step 1. If the HDS indicates NOT COMPLETED, return to step 16 and recheck.

19. Clear the DTC with the HDS.

20. Drive the vehicle in 2nd gear in the sequential sportshift mode in the S position for more than 5 seconds, then upshift to 3rd gear, and drive in 3rd gear for more than 5 seconds. Slow down and stop the wheels.

21. Check for DTC(s) in the DTCs/Freeze Data in A/T Mode Menu with the HDS.

    *Is DTC P0843 indicated?*

    **YES**—Check for poor connections and loose terminals at the 2nd clutch transmission fluid pressure switch and the PCM, then go to step 1.

    **NO**—Go to step 22.

22. Monitor the OBD status for P0843 in the DTCs/Freeze Data in A/T Mode Menu for a pass/fail.

    *Does the result indicate PASSED?*

    **YES**—Troubleshooting is complete. If any other DTCs were indicated on step 21, go to the indicated DTC's troubleshooting.■

    **NO**—If the HDS indicates FAILED, check for poor connections and loose terminals at the 2nd clutch transmission fluid pressure switch and the PCM, then go to step 1. If the HDS indicates NOT COMPLETED, return to step 20 and recheck.

Protected by AR



## DTC Troubleshooting (cont'd)

**DTC P0847:** Short in 3rd Clutch Transmission Fluid Pressure Switch Circuit, or 3rd Clutch Transmission Fluid Pressure Switch Stuck ON

NOTE:
- Before you troubleshoot, record all freeze data and any on-board snapshot, and review General Troubleshooting Information (see page 14-4).
- This code is caused by an electrical circuit problem and cannot be caused by a mechanical problem in the transmission.

1. Clear the DTC with the HDS.

2. Check the 3rd PRESSURE SWITCH signal with the HDS in the A/T data list when not in 3rd gear.

   *Is the 3rd PRESSURE SWITCH OFF?*

   **YES**—Go to step 3.

   **NO**—Go to step 6.

3. Start the engine, and warm it up to normal operating temperature (the radiator fan comes on).

4. Drive the vehicle in 3rd gear in the sequential sportshift mode in the S position for more than 5 seconds, then upshift to 4th gear, and drive in 4th gear for more than 5 seconds. Slow down and stop the wheels.

5. Monitor the OBD status for P0847 in the DTCs/ Freeze Data in A/T Mode Menu for a pass/fail.

   *Does the result indicate FAILED?*

   **YES**—Go to step 6.

   **NO**—Intermittent failure, the system is OK at this time. Check the OP3SW (BLU/WHT) wire for an intermittent short to ground between the 3rd clutch transmission fluid pressure switch and the PCM. If the HDS indicates NOT COMPLETED, return to step 4 and recheck.

6. Turn the ignition switch OFF.

7. Disconnect the 3rd clutch transmission fluid pressure switch connector.

8. Turn the ignition switch ON (II).

9. Check the 3rd PRESSURE SWITCH signal with the HDS in the A/T data list.

   *Is the 3rd PRESSURE SWITCH OFF?*

   **YES**—Replace the 3rd clutch transmission fluid pressure switch (see page 14-235), then go to step 18.

   **NO**—Go to step 10.

10. Turn the ignition switch OFF.

11. Jump the SCS line with the HDS.

12. Disconnect PCM connector B (44P).

13. Check for continuity between PCM connector terminal B9 and body ground.

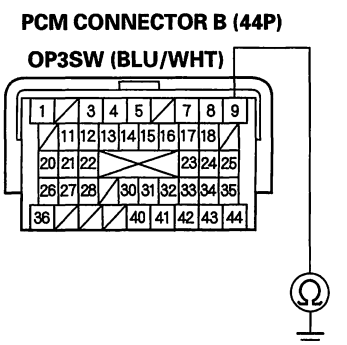


Terminal side of female terminals

*Is there continuity?*

**YES**—Repair short in the wire between PCM connector terminal B9 and the 3rd clutch transmission fluid pressure switch, then go to step 18.

**NO**—Go to step 14.



BACK

Protected by AR

14. Update the A/T software in the PCM if it does not have the latest software (see page 14-8), or substitute a known-good PCM (see page 14-10).

15. Drive the vehicle in 3rd gear in the sequential sportshift mode in the S position for more than 5 seconds, then upshift to 4th gear, and drive in 4th gear for more than 5 seconds. Slow down and stop the wheels.

16. Check for DTC(s) in the DTCs/Freeze Data in A/T Mode Menu with the HDS.

    *Is DTC P0847 indicated?*

    **YES**—If the PCM was updated, substitute a known-good PCM (see page 14-10), then recheck. If the PCM was substituted, go to step 1.

    **NO**—Go to step 17.

17. Monitor the OBD status for P0847 in the DTCs/Freeze Data in A/T Mode Menu for a pass/fail.

    *Does the result indicate PASSED?*

    **YES**—If the PCM was updated, troubleshooting is complete. If the PCM was substituted, replace the original PCM (see page 11-252). If any other DTCs were indicated on step 16, go to the indicated DTC's troubleshooting.■

    **NO**—If the HDS indicates FAILED, check for poor connections and loose terminals at the 3rd clutch transmission fluid pressure switch and the PCM. If the PCM was updated, substitute a known-good PCM (see page 14-10), then recheck. If the PCM was substituted, go to step 1. If the HDS indicates NOT COMPLETED, return to step 15 and recheck.

18. Clear the DTC with the HDS.

19. Drive the vehicle in 3rd gear in the sequential sportshift mode in the S position for more than 5 seconds, then upshift to 3rd gear, and drive in 3rd gear for more than 5 seconds. Slow down and stop the wheels.

20. Check for DTC(s) in the DTCs/Freeze Data in A/T Mode Menu with the HDS.

    *Is DTC P0847 indicated?*

    **YES**—Check for poor connections and loose terminals at the 3rd clutch transmission fluid pressure switch and the PCM, then go to step 1.

    **NO**—Go to step 21.

21. Monitor the OBD status for P0847 in the DTCs/Freeze Data in A/T Mode Menu for a pass/fail.

    *Does the result indicate PASSED?*

    **YES**—Troubleshooting is complete. If any other DTCs were indicated on step 20, go to the indicated DTC's troubleshooting.■

    **NO**—If the HDS indicates FAILED, check for poor connections and loose terminals at the 3rd clutch transmission fluid pressure switch and the PCM, then go to step 1. If the HDS indicates NOT COMPLETED, return to step 19 and recheck.

Protected by AR



## DTC Troubleshooting (cont'd)

**DTC P0848:** Open in 3rd Clutch Transmission Fluid Pressure Switch Circuit, or 3rd Clutch Transmission Fluid Pressure Switch Stuck OFF

NOTE:
- Before you troubleshoot, record all freeze data and any on-board snapshot, and review General Troubleshooting Information (see page 14-4).
- This code is caused by an electrical circuit problem and cannot be caused by a mechanical problem in the transmission.

1. Clear the DTC with the HDS.

2. Start the engine, and warm it up to normal operating temperature (the radiator fan comes on).

3. Shift the shift lever into the S position while pressing the brake pedal, upshift to 3rd gear by pulling the paddle shifter + (upshift switch), and verify with the HDS in the A/T data list that the SHIFT COMMAND indicates 3rd.

4. Check the 3rd PRESSURE SWITCH signal with the HDS in the A/T data list.

   *Is the 3rd PRESSURE SWITCH ON?*

   **YES**—Go to step 5.

   **NO**—Go to step 7.

5. Drive the vehicle in 3rd gear in the sequential sportshift mode in the S position for more than 5 seconds, then upshift to 4th gear, and drive in 4th gear for more than 5 seconds. Slow down and stop the wheels.

6. Monitor the OBD status for P0848 in the DTCs/ Freeze Data in A/T Mode Menu for a pass/fail.

   *Does the result indicate FAILED?*

   **YES**—Go to step 7.

   **NO**—Intermittent failure, the system is OK at this time. Check for poor connections and loose terminals at the 3rd clutch transmission fluid pressure switch and the PCM. If the HDS indicates NOT COMPLETED, return to step 5 and recheck.



BACK

Protected by AR

7. Turn the ignition switch OFF.

8. Disconnect the 3rd clutch transmission fluid pressure switch connector.

9. Turn the ignition switch ON (II).

10. Measure the voltage between the 3rd clutch transmission fluid pressure switch connector terminal and body ground.

**3RD CLUTCH TRANSMISSION FLUID PRESSURE SWITCH CONNECTOR**

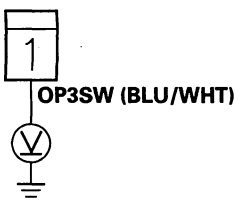


Wire side of female terminals

*Is there about 5 V?*

**YES**—Replace the 3rd clutch transmission fluid pressure switch (see page 14-235), then go to step 19.

**NO**—Go to step 11.

11. Turn the ignition switch OFF.

12. Jump the SCS line with the HDS.

13. Disconnect PCM connector B (44P).

14. Check for continuity between PCM connector terminal B9 and the 3rd clutch transmission fluid pressure switch connector terminal.

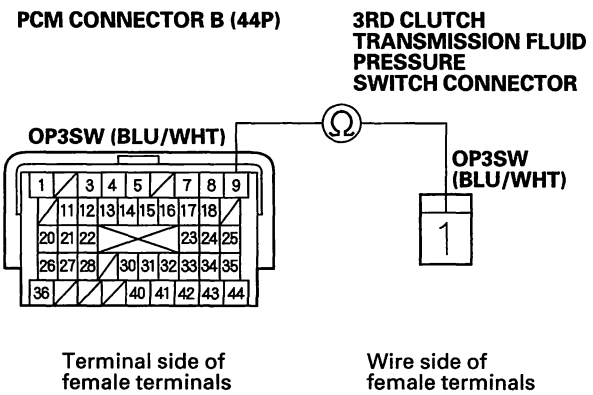


*Is there continuity?*

**YES**—Check for poor connections and loose terminals at the 3rd clutch transmission fluid pressure switch and the PCM. If the connections are OK, go to step 15.

**NO**—Repair open in the wire between PCM connector terminal B9 and the 3rd clutch transmission fluid pressure switch, then go to step 19.

(cont'd)

Protected by AR



## DTC Troubleshooting (cont'd)

15. Update the A/T software in the PCM if it does not have the latest software (see page 14-8), or substitute a known-good PCM (see page 14-10).

16. Drive the vehicle in 3rd gear in the sequential sportshift mode in the S position for more than 5 seconds, then upshift to 4th gear, and drive in 4th gear for more than 5 seconds. Slow down and stop the wheels.

17. Check for DTC(s) in the DTCs/Freeze Data in A/T Mode Menu with the HDS.

    *Is DTC P0848 indicated?*

    **YES**—If the PCM was updated, substitute a known-good PCM (see page 14-10), then recheck. If the PCM was substituted, go to step 1.

    **NO**—Go to step 18.

18. Monitor the OBD status for P0848 in the DTCs/Freeze Data in A/T Mode Menu for a pass/fail.

    *Does the result indicate PASSED?*

    **YES**—If the PCM was updated, troubleshooting is complete. If the PCM was substituted, replace the original PCM (see page 11-252). If any other DTCs were indicated on step 17, go to the indicated DTC's troubleshooting.■

    **NO**—If the HDS indicates FAILED, check for poor connections and loose terminals at the 3rd clutch transmission fluid pressure switch and the PCM. If the PCM was updated, substitute a known-good PCM (see page 14-10), then recheck. If the PCM was substituted, go to step 1. If the HDS indicates NOT COMPLETED, return to step 16 and recheck.

19. Clear the DTC with the HDS.

20. Drive the vehicle in 3rd gear in the sequential sportshift mode in the S position for more than 5 seconds, then upshift to 3rd gear, and drive in 3rd gear for more than 5 seconds. Slow down and stop the wheels.

21. Check for DTC(s) in the DTCs/Freeze Data in A/T Mode Menu with the HDS.

    *Is DTC P0848 indicated?*

    **YES**—Check for poor connections and loose terminals at the 3rd clutch transmission fluid pressure switch and the PCM, then go to step 1.

    **NO**—Go to step 22.

22. Monitor the OBD status for P0848 in the DTCs/Freeze Data in A/T Mode Menu for a pass/fail.

    *Does the result indicate PASSED?*

    **YES**—Troubleshooting is complete. If any other DTCs were indicated on step 21, go to the indicated DTC's troubleshooting.■

    **NO**—If the HDS indicates FAILED, check for poor connections and loose terminals at the 3rd clutch transmission fluid pressure switch and the PCM, then go to step 1. If the HDS indicates NOT COMPLETED, return to step 20 and recheck.



BACK

Protected by AR

## **DTC P0872:** Short in 4th Clutch Transmission Fluid Pressure Switch Circuit, or 4th Clutch Transmission Fluid Pressure Switch Stuck ON

NOTE:
- Before you troubleshoot, record all freeze data and any on-board snapshot, and review General Troubleshooting Information (see page 14-4).
- This code is caused by an electrical circuit problem and cannot be caused by a mechanical problem in the transmission.

1. Clear the DTC with the HDS.

2. Check the 4th PRESSURE SWITCH signal with the HDS in the A/T data list when not in 4th gear.

   *Is the 4th PRESSURE SWITCH OFF?*

   **YES**—Go to step 3.

   **NO**—Go to step 6.

3. Start the engine, and warm it up to normal operating temperature (the radiator fan comes on).

4. Drive the vehicle in 4th gear in the sequential sportshift mode in the S position for more than 5 seconds, then upshift to 5th gear, and drive in 5th gear for more than 5 seconds. Slow down and stop the wheels.

5. Monitor the OBD status for P0872 in the DTCs/ Freeze Data in A/T Mode Menu for a pass/fail.

   *Does the result indicate FAILED?*

   **YES**—Go to step 6.

   **NO**—Intermittent failure, the system is OK at this time. Check the OP4SW (BLU/YEL) wire for an intermittent short to ground between the 4th clutch transmission fluid pressure switch and the PCM. If the HDS indicates NOT COMPLETED, return to step 4 and recheck.

6. Turn the ignition switch OFF.

7. Disconnect the 4th clutch transmission fluid pressure switch connector.

8. Turn the ignition switch ON (II).

9. Check the 4th PRESSURE SWITCH signal with the HDS in the A/T data list.

   *Is the 4th PRESSURE SWITCH OFF?*

   **YES**—Replace the 4th clutch transmission fluid pressure switch (see page 14-236), then go to step 18.

   **NO**—Go to step 10.

10. Turn the ignition switch OFF.

11. Jump the SCS line with the HDS.

12. Disconnect PCM connector C (44P).

13. Check for continuity between PCM connector terminal C38 and body ground.

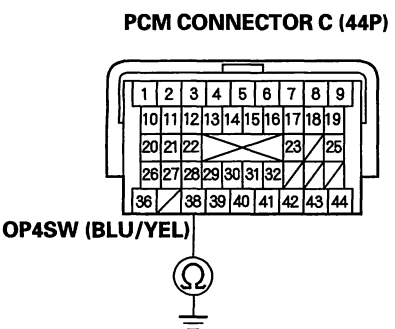


Terminal side of female terminals

   *Is there continuity?*

   **YES**—Repair short in the wire between PCM connector terminal C38 and the 4th clutch transmission fluid pressure switch, then go to step 18.

   **NO**—Go to step 14.

(cont'd)

Protected by AR



## DTC Troubleshooting (cont'd)

14. Update the A/T software in the PCM if it does not have the latest software (see page 14-8), or substitute a known-good PCM (see page 14-10).

15. Drive the vehicle in 4th gear in the sequential sportshift mode in the S position for more than 5 seconds, then upshift to 5th gear, and drive in 5th gear for more than 5 seconds. Slow down and stop the wheels.

16. Check for DTC(s) in the DTCs/Freeze Data in A/T Mode Menu with the HDS.

    *Is DTC P0872 indicated?*

    **YES**—If the PCM was updated, substitute a known-good PCM (see page 14-10), then recheck. If the PCM was substituted, go to step 1.

    **NO**—Go to step 17.

17. Monitor the OBD status for P0872 in the DTCs/Freeze Data in A/T Mode Menu for a pass/fail.

    *Does the result indicate PASSED?*

    **YES**—If the PCM was updated, troubleshooting is complete. If the PCM was substituted, replace the original PCM (see page 11-252). If any other DTCs were indicated on step 16, go to the indicated DTC's troubleshooting.■

    **NO**—If the HDS indicates FAILED, check for poor connections and loose terminals at the 4th clutch transmission fluid pressure switch and the PCM. If the PCM was updated, substitute a known-good PCM (see page 14-10), then recheck. If the PCM was substituted, go to step 1. If the HDS indicates NOT COMPLETED, return to step 15 and recheck.

18. Clear the DTC with the HDS.

19. Drive the vehicle in 4th gear in the sequential sportshift mode in the S position for more than 5 seconds, then upshift to 5th gear, and drive in 5th gear for more than 5 seconds. Slow down and stop the wheels.

20. Check for DTC(s) in the DTCs/Freeze Data in A/T Mode Menu with the HDS.

    *Is DTC P0872 indicated?*

    **YES**—Check for poor connections and loose terminals at the 4th clutch transmission fluid pressure switch and the PCM, then go to step 1.

    **NO**—Go to step 21.

21. Monitor the OBD status for P0872 in the DTCs/Freeze Data in A/T Mode Menu for a pass/fail.

    *Does the result indicate PASSED?*

    **YES**—Troubleshooting is complete. If any other DTCs were indicated on step 20, go to the indicated DTC's troubleshooting.■

    **NO**—If the HDS indicates FAILED, check for poor connections and loose terminals at the 4th clutch transmission fluid pressure switch and the PCM, then go to step 1. If the HDS indicates NOT COMPLETED, return to step 19 and recheck.



BACK

Protected by AR

## **DTC P0873:** Open in 4th Clutch Transmission Fluid Pressure Switch Circuit, or 4th Clutch Transmission Fluid Pressure Switch Stuck OFF

NOTE:
- Before you troubleshoot, record all freeze data and any on-board snapshot, and review General Troubleshooting Information (see page 14-4).
- This code is caused by an electrical circuit problem and cannot be caused by a mechanical problem in the transmission.

1. Clear the DTC with the HDS.

2. Start the engine, and warm it up to normal operating temperature (the radiator fan comes on).

3. Shift the shift lever into the S position while pressing the brake pedal, upshift to 4th gear by pulling the paddle shifter + (upshift switch), and verify with the HDS in the A/T data list that the SHIFT COMMAND indicates 4th.

4. Check the 4th PRESSURE SWITCH signal with the HDS in the A/T data list.

   *Is the 4th PRESSURE SWITCH ON?*

   **YES**—Go to step 5.

   **NO**—Go to step 7.

5. Drive the vehicle in 4th gear in the sequential sportshift mode in the S position for more than 5 seconds, then upshift to 5th gear, and drive in 5th gear for more than 5 seconds. Slow down and stop the wheels.

6. Monitor the OBD status for P0873 in the DTCs/ Freeze Data in A/T Mode Menu for a pass/fail.

   *Does the result indicate FAILED?*

   **YES**—Go to step 7.

   **NO**—Intermittent failure, the system is OK at this time. Check for poor connections or loose terminals at the 4th clutch transmission fluid pressure switch and the PCM. If the HDS indicates NOT COMPLETED, return to step 5 and recheck.

(cont'd)

Protected by AR



## DTC Troubleshooting (cont'd)

7. Turn the ignition switch OFF.

8. Disconnect the 4th clutch transmission fluid pressure switch connector.

9. Turn the ignition switch ON (II).

10. Measure the voltage between the 4th clutch transmission fluid pressure switch connector terminal and body ground.

**4TH CLUTCH TRANSMISSION FLUID PRESSURE SWITCH CONNECTOR**

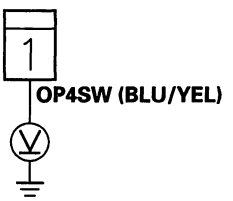


Wire side of female terminals

*Is there about 5 V?*

**YES**—Replace the 4th clutch transmission fluid pressure switch (see page 14-236), then go to step 19.

**NO**—Go to step 11.

11. Turn the ignition switch OFF.

12. Jump the SCS line with the HDS.

13. Disconnect PCM connector C (44P).

14. Check for continuity between PCM connector terminal C38 and the 4th clutch transmission fluid pressure switch connector terminal.

**4TH CLUTCH TRANSMISSION FLUID PRESSURE SWITCH CONNECTOR**

**PCM CONNECTOR C (44P)**

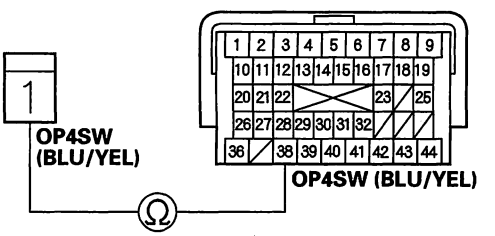


Wire side of female terminals

Terminal side of female terminals

*Is there continuity?*

**YES**—Check for poor connections and loose terminals at the 4th clutch transmission fluid pressure switch and the PCM. If the connections are OK, go to step 15.

**NO**—Repair open in the wire between PCM connector terminal C38 and the 4th clutch transmission fluid pressure switch, then go to step 19.



BACK

Protected by AR

15. Update the A/T software in the PCM if it does not have the latest software (see page 14-8), or substitute a known-good PCM (see page 14-10).

16. Drive the vehicle in 4th gear in the sequential sportshift mode in the S position for more than 5 seconds, then upshift to 5th gear, and drive in 5th gear for more than 5 seconds. Slow down and stop the wheels.

17. Check for DTC(s) in the DTCs/Freeze Data in A/T Mode Menu with the HDS.

    *Is DTC P0873 indicated?*

    **YES**—If the PCM was updated, substitute a known-good PCM (see page 14-10), then recheck. If the PCM was substituted, go to step 1.

    **NO**—Go to step 18.

18. Monitor the OBD status for P0873 in the DTCs/Freeze Data in A/T Mode Menu for a pass/fail.

    *Does the result indicate PASSED?*

    **YES**—If the PCM was updated, troubleshooting is complete. If the PCM was substituted, replace the original PCM (see page 11-252). If any other DTCs were indicated on step 17, go to the indicated DTC's troubleshooting. ■

    **NO**—If the HDS indicates FAILED, check for poor connections and loose terminals at the 4th clutch transmission fluid pressure switch and the PCM. If the PCM was updated, substitute a known-good PCM (see page 14-10), then recheck. If the PCM was substituted, go to step 1. If the HDS indicates NOT COMPLETED, return to step 16 and recheck.

19. Clear the DTC with the HDS.

20. Drive the vehicle in 4th gear in the sequential sportshift mode in the S position for more than 5 seconds, then upshift to 4th gear, and drive in 4th gear for more than 5 seconds. Slow down and stop the wheels.

21. Check for DTC(s) in the DTCs/Freeze Data in A/T Mode Menu with the HDS.

    *Is DTC P0873 indicated?*

    **YES**—Check for poor connections and loose terminals at the 4th clutch transmission fluid pressure switch and the PCM, then go to step 1.

    **NO**—Go to step 22.

22. Monitor the OBD status for P0873 in the DTCs/Freeze Data in A/T Mode Menu for a pass/fail.

    *Does the result indicate PASSED?*

    **YES**—Troubleshooting is complete. If any other DTCs were indicated on step 21, go to the indicated DTC's troubleshooting. ■

    **NO**—If the HDS indicates FAILED, check for poor connections and loose terminals at the 4th clutch transmission fluid pressure switch and the PCM, then go to step 1. If the HDS indicates NOT COMPLETED, return to step 20 and recheck.

Protected by AR



## DTC Troubleshooting (cont'd)

### **DTC P0962:** Problem in A/T Clutch Pressure Control Solenoid Valve A Circuit

NOTE:
- Before you troubleshoot, record all freeze data and any on-board snapshot, and review General Troubleshooting Information (see page 14-4).
- This code is caused by an electrical circuit problem and cannot be caused by a mechanical problem in the transmission.

1. Clear the DTC with the HDS.

2. Check that DTC P0962 recurs.

   *Is DTC P0962 indicated?*

   **YES**—Go to step 6.

   **NO**—Go to step 3.

3. Choose Clutch Pressure Control (Linear) Solenoid A in the Miscellaneous Test Menu, and test A/T clutch pressure control solenoid valve A with the HDS.

   *Is the result NORMAL?*

   **YES**—Go to step 4.

   **NO**—Go to step 6.

4. Choose Clutch Pressure Control Solenoid Control in the Miscellaneous Test Menu, and command A/T clutch pressure control solenoid valve A at 1.0 A with the HDS.

5. Monitor the OBD status for P0962 in the DTCs/ Freeze Data in A/T Mode Menu for a pass/fail.

   *Does the result indicate FAILED?*

   **YES**—Go to step 6.

   **NO**—Intermittent failure, the system is OK at this time. Check for poor connections and loose terminals at A/T clutch pressure control solenoid valve A and the PCM. If the HDS indicates NOT COMPLETED, return to step 3 and recheck.

6. Turn the ignition switch OFF.

7. Disconnect the A/T clutch pressure control solenoid valve A connector.

8. Measure the resistance between A/T clutch pressure control solenoid valve A connector terminals No. 1 and No. 2.

**A/T CLUTCH PRESSURE CONTROL SOLENOID VALVE A CONNECTOR**

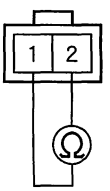


Terminal side of male terminals

*Is there 3– 10 Ω ?*

**YES**—Go to step 9.

**NO**—Replace A/T clutch pressure control solenoid valve A (see page 14-226), then go to step 16.



BACK

Protected by AR

9. Check for continuity between A/T clutch pressure control solenoid valve A connector terminal No. 2 and body ground.

**A/T CLUTCH PRESSURE CONTROL SOLENOID VALVE A CONNECTOR**

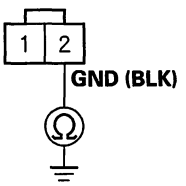


Wire side of female terminals

*Is there continuity?*

**YES**—Go to step 10.

**NO**—Repair open in the wire between A/T clutch pressure control solenoid valve A and ground (G101), or repair poor ground (G101), then go to step 16.

10. Turn the ignition switch ON (II).

11. Measure the voltage between A/T clutch pressure control solenoid valve A connector terminals No. 1 and No. 2.

**A/T CLUTCH PRESSURE CONTROL SOLENOID VALVE A CONNECTOR**

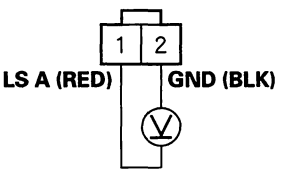


Wire side of female terminals

*Is there voltage?*

**YES**—Go to step 12.

**NO**—Repair open or short in the wire between PCM connector terminal B44 and A/T clutch pressure control solenoid valve A, then go to step 16.

(cont'd)

Protected by AR



## DTC Troubleshooting (cont'd)

12. Update the A/T software in the PCM if it does not have the latest software (see page 14-8), or substitute a known-good PCM (see page 14-10).

13. Test-drive the vehicle for several minutes in the D position through all five gears.

14. Check for DTC(s) in the DTCs/Freeze Data in A/T Mode Menu with the HDS.

    *Is DTC P0962 indicated?*

    **YES**—If the PCM was updated, substitute a known-good PCM (see page 14-10), then recheck. If the PCM was substituted, go to step 1.

    **NO**—Go to step 15.

15. Monitor the OBD status for P0962 in the DTCs/Freeze Data in A/T Mode Menu for a pass/fail.

    *Does the result indicate PASSED?*

    **YES**—If the PCM was updated, troubleshooting is complete. If the PCM was substituted, replace the original PCM (see page 11-252). If any other DTCs were indicated on step 14, go to the indicated DTC's troubleshooting.■

    **NO**—If the HDS indicates FAILED, check for poor connections and loose terminals at A/T clutch pressure control solenoid valve A and the PCM. If the PCM was updated, substitute a known-good PCM (see page 14-10), then recheck. If the PCM was substituted, go to step 1. If the HDS indicates NOT COMPLETED, return to step 13 and recheck.

16. Clear the DTC with the HDS.

17. Test-drive the vehicle for several minutes in the D position through all five gears.

18. Check for DTC(s) in the DTCs/Freeze Data in A/T Mode Menu with the HDS.

    *Is DTC P0962 indicated?*

    **YES**—Check for poor connections and loose terminals at A/T clutch pressure control solenoid valve A and the PCM, then go to step 1.

    **NO**—Go to step 19.

19. Monitor the OBD status for P0962 in the DTCs/Freeze Data in A/T Mode Menu for a pass/fail.

    *Does the result indicate PASSED?*

    **YES**—Troubleshooting is complete. If any other DTCs were indicated on step 18, go to the indicated DTC's troubleshooting.■

    **NO**—If the HDS indicates FAILED, check for poor connections and loose terminals at A/T clutch pressure control solenoid valve A and the PCM, then go to step 1. If the HDS indicates NOT COMPLETED, return to step 17 and recheck.



BACK

Protected by AR

## **DTC P0963:** Problem in A/T Clutch Pressure Control Solenoid Valve A

NOTE:
- Before you troubleshoot, record all freeze data and any on-board snapshot, and review General Troubleshooting Information (see page 14-4).
- This code is caused by an electrical circuit problem and cannot be caused by a mechanical problem in the transmission.

1. Clear the DTC with the HDS.

2. Check that DTC P0963 recurs.

   *Is DTC P0963 indicated?*

   **YES**—Go to step 6.

   **NO**—Go to step 3.

3. Choose Clutch Pressure Control (Linear) Solenoid A in the Miscellaneous Test Menu, and test A/T clutch pressure control solenoid valve A with the HDS.

   *Is the result NORMAL?*

   **YES**—Go to step 4.

   **NO**—Go to step 6.

4. Choose Clutch Pressure Control Solenoid Control in the Miscellaneous Test Menu, and command A/T clutch pressure control solenoid valve A at 0.2 A with the HDS.

5. Monitor the OBD status for P0963 in the DTCs/ Freeze Data in A/T Mode Menu for a pass/fail.

   *Does the result indicate FAILED?*

   **YES**—Go to step 6.

   **NO**—Intermittent failure, the system is OK at this time. Check for poor connections and loose terminals at A/T clutch pressure control solenoid valve A and the PCM. If the HDS indicates NOT COMPLETED, return to step 3 and recheck.

6. Turn the ignition switch OFF.

7. Disconnect the A/T clutch pressure control solenoid valve A connector.

8. Measure the resistance between A/T clutch pressure control solenoid valve A connector terminals No. 1 and No. 2.

**A/T CLUTCH PRESSURE CONTROL SOLENOID VALVE A CONNECTOR**

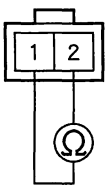


Terminal side of male terminals

*Is there 3– 10 Ω ?*

**YES**—Go to step 9.

**NO**—Replace A/T clutch pressure control solenoid valve A (see page 14-226), then go to step 14.

9. Check for continuity between A/T clutch pressure control solenoid valve A connector terminal No. 2 and body ground.

**A/T CLUTCH PRESSURE CONTROL SOLENOID VALVE A CONNECTOR**

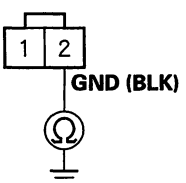


Wire side of female terminals

*Is there continuity?*

**YES**—Go to step 10.

**NO**—Repair open in the wire between A/T clutch pressure control solenoid valve A and ground (G101), or repair poor ground (G101), then go to step 10.

(cont'd)

Protected by AR



## DTC Troubleshooting (cont'd)

10. Update the A/T software in the PCM if it does not have the latest software (see page 14-8), or substitute a known-good PCM (see page 14-10).

11. Test-drive the vehicle for several minutes in the D position through all five gears.

12. Check for DTC(s) in the DTCs/Freeze Data in A/T Mode Menu with the HDS.

    *Is DTC P0963 indicated?*

    **YES**—If the PCM was updated, substitute a known-good PCM (see page 14-10), then recheck. If the PCM was substituted, go to step 1.

    **NO**—Go to step 13.

13. Monitor the OBD status for P0963 in the DTCs/Freeze Data in A/T Mode Menu for a pass/fail.

    *Does the result indicate PASSED?*

    **YES**—If the PCM was updated, troubleshooting is complete. If the PCM was substituted, replace the original PCM (see page 11-252). If any other DTCs were indicated on step 12, go to the indicated DTC's troubleshooting.■

    **NO**—If the HDS indicates FAILED, check for poor connections and loose terminals at A/T clutch pressure control solenoid valve A and the PCM. If the PCM was updated, substitute a known-good PCM (see page 14-10), then recheck. If the PCM was substituted, go to step 1. If the HDS indicates NOT COMPLETED, return to step 11 and recheck.

14. Clear the DTC with the HDS.

15. Test-drive the vehicle for several minutes in the D position through all five gears.

16. Check for DTC(s) in the DTCs/Freeze Data in A/T Mode Menu with the HDS.

    *Is DTC P0963 indicated?*

    **YES**—Check for poor connections and loose terminals at A/T clutch pressure control solenoid valve A and the PCM, then go to step 1.

    **NO**—Go to step 17.

17. Monitor the OBD status for P0963 in the DTCs/Freeze Data in A/T Mode Menu for a pass/fail.

    *Does the result indicate PASSED?*

    **YES**—Troubleshooting is complete. If any other DTCs were indicated on step 16, go to the indicated DTC's troubleshooting.■

    **NO**—If the HDS indicates FAILED, check for poor connections and loose terminals at A/T clutch pressure control solenoid valve A and the PCM, then go to step 1. If the HDS indicates NOT COMPLETED, return to step 15 and recheck.



BACK

Protected by AR

## **DTC P0966:** Problem in A/T Clutch Pressure Control Solenoid Valve B Circuit

NOTE:
- Before you troubleshoot, record all freeze data and any on-board snapshot, and review General Troubleshooting Information (see page 14-4).
- This code is caused by an electrical circuit problem and cannot be caused by a mechanical problem in the transmission.

1. Clear the DTC with the HDS.

2. Check that DTC P0966 recurs.

   *Is DTC P0966 indicated?*

   **YES**—Go to step 6.

   **NO**—Go to step 3.

3. Choose Clutch Pressure Control (Linear) Solenoid B in the Miscellaneous Test Menu, and test A/T clutch pressure control solenoid valve B with the HDS.

   *Is the result NORMAL?*

   **YES**—Go to step 4.

   **NO**—Go to step 6.

4. Choose Clutch Pressure Control Solenoid Control in the Miscellaneous Test Menu, and command A/T clutch pressure control solenoid valve B at 1.0 A with the HDS.

5. Monitor the OBD status for P0966 in the DTCs/ Freeze Data in A/T Mode Menu for a pass/fail.

   *Does the result indicate FAILED?*

   **YES**—Go to step 6.

   **NO**—Intermittent failure, the system is OK at this time. Check for poor connections and loose terminals at A/T clutch pressure control solenoid valve B and the PCM. If the HDS indicates NOT COMPLETED, return to step 3 and recheck.

6. Turn the ignition switch OFF.

7. Disconnect the A/T clutch pressure control solenoid valve B connector.

8. Measure the resistance between A/T clutch pressure control solenoid valve B connector terminals No. 1 and No. 2.

**A/T CLUTCH PRESSURE CONTROL SOLENOID VALVE B CONNECTOR**

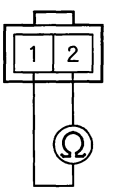


Terminal side of male terminals

*Is there 3– 10 Ω ?*

**YES**—Go to step 9.

**NO**—Replace A/T clutch pressure control solenoid valve B (see page 14-226), then go to step 16.

(cont'd)

Protected by AR



## DTC Troubleshooting (cont'd)

9. Check for continuity between A/T clutch pressure control solenoid valve B connector terminal No. 2 and body ground.

**A/T CLUTCH PRESSURE CONTROL SOLENOID VALVE B CONNECTOR**

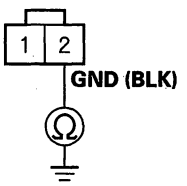


Wire side of female terminals

*Is there continuity?*

**YES**—Go to step 10.

**NO**—Repair open in the wire between A/T clutch pressure control solenoid valve B and ground (G101), or repair poor ground (G101), then go to step 16.

10. Turn the ignition switch ON (II).

11. Measure the voltage between A/T clutch pressure control solenoid valve B connector terminals No. 1 and No. 2.

**A/T CLUTCH PRESSURE CONTROL SOLENOID VALVE B CONNECTOR**

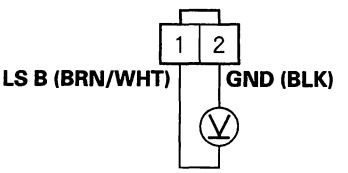


Wire side of female terminals

*Is there voltage?*

**YES**—Go to step 12.

**NO**—Repair open or short in the wire between PCM connector terminal B35 and A/T clutch pressure control solenoid valve B, then go to step 16.



BACK

Protected by AR

12. Update the A/T software in the PCM if it does not have the latest software (see page 14-8), or substitute a known-good PCM (see page 14-10).

13. Test-drive the vehicle for several minutes in the D position through all five gears.

14. Check for DTC(s) in the DTCs/Freeze Data in A/T Mode Menu with the HDS.

    *Is DTC P0966 indicated?*

    **YES**—If the PCM was updated, substitute a known-good PCM (see page 14-10), then recheck. If the PCM was substituted, go to step 1.

    **NO**—Go to step 15.

15. Monitor the OBD status for P0966 in the DTCs/Freeze Data in A/T Mode Menu for a pass/fail.

    *Does the result indicate PASSED?*

    **YES**—If the PCM was updated, troubleshooting is complete. If the PCM was substituted, replace the original PCM (see page 11-252). If any other DTCs were indicated on step 14, go to the indicated DTC's troubleshooting. ■

    **NO**—If the HDS indicates FAILED, check for poor connections and loose terminals at A/T clutch pressure control solenoid valve B and the PCM. If the PCM was updated, substitute a known-good PCM (see page 14-10), then recheck. If the PCM was substituted, go to step 1. If the HDS indicates NOT COMPLETED, return to step 13 and recheck.

16. Clear the DTC with the HDS.

17. Test-drive the vehicle for several minutes in the D position through all five gears.

18. Check for DTC(s) in the DTCs/Freeze Data in A/T Mode Menu with the HDS.

    *Is DTC P0966 indicated?*

    **YES**—Check for poor connections and loose terminals at A/T clutch pressure control solenoid valve B and the PCM, then go to step 1.

    **NO**—Go to step 19.

19. Monitor the OBD status for P0966 in the DTCs/Freeze Data in A/T Mode Menu for a pass/fail.

    *Does the result indicate PASSED?*

    **YES**—Troubleshooting is complete. If any other DTCs were indicated on step 18, go to the indicated DTC's troubleshooting. ■

    **NO**—If the HDS indicates FAILED, check for poor connections and loose terminals at A/T clutch pressure control solenoid valve B and the PCM, then go to step 1. If the HDS indicates NOT COMPLETED, return to step 17 and recheck.

Protected by AR



## DTC Troubleshooting (cont'd)

### **DTC P0967:** Problem in A/T Clutch Pressure Control Solenoid Valve B

NOTE:
- Before you troubleshoot, record all freeze data and any on-board snapshot, and review General Troubleshooting Information (see page 14-4).
- This code is caused by an electrical circuit problem and cannot be caused by a mechanical problem in the transmission.

1. Clear the DTC with the HDS.

2. Check that DTC P0967 recurs.

   *Is DTC P0967 indicated?*

   **YES**—Go to step 6.

   **NO**—Go to step 3.

3. Choose Clutch Pressure Control (Linear) Solenoid B in the Miscellaneous Test Menu, and test A/T clutch pressure control solenoid valve B with the HDS.

   *Is the result NORMAL?*

   **YES**—Go to step 4.

   **NO**—Go to step 6.

4. Choose Clutch Pressure Control Solenoid Control in the Miscellaneous Test Menu, and command A/T clutch pressure control solenoid valve B at 0.2 A with the HDS.

5. Monitor the OBD status for P0967 in the DTCs/ Freeze Data in A/T Mode Menu for a pass/fail.

   *Does the result indicate FAILED?*

   **YES**—Go to step 6.

   **NO**—Intermittent failure, the system is OK at this time. Check for poor connections and loose terminals at A/T clutch pressure control solenoid valve B and the PCM. If the HDS indicates NOT COMPLETED, return to step 3 and recheck.

6. Turn the ignition switch OFF.

7. Disconnect the A/T clutch pressure control solenoid valve B connector.

8. Measure the resistance between A/T clutch pressure control solenoid valve B connector terminals No. 1 and No. 2.

**A/T CLUTCH PRESSURE CONTROL SOLENOID VALVE B CONNECTOR**

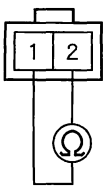


Terminal side of male terminals

*Is there 3– 10 Ω ?*

**YES**—Go to step 9.

**NO**—Replace A/T clutch pressure control solenoid valve B (see page 14-226), then go to step 14.

9. Check for continuity between A/T clutch pressure control solenoid valve B connector terminal No. 2 and body ground.

**A/T CLUTCH PRESSURE CONTROL SOLENOID VALVE B CONNECTOR**

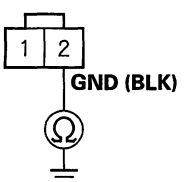


Wire side of female terminals

*Is there continuity?*

**YES**—Go to step 10.

**NO**—Repair open in the wire between A/T clutch pressure control solenoid valve B and ground (G101), or repair poor ground (G101), then go to step 14.



BACK

Protected by AR

10. Update the A/T software in the PCM if it does not have the latest software (see page 14-8), or substitute a known-good PCM (see page 14-10).

11. Test-drive the vehicle for several minutes in the D position through all five gears.

12. Check for DTC(s) in the DTCs/Freeze Data in A/T Mode Menu with the HDS.

    *Is DTC P0967 indicated?*

    **YES**—If the PCM was updated, substitute a known-good PCM (see page 14-10), then recheck. If the PCM was substituted, go to step 1.

    **NO**—Go to step 13.

13. Monitor the OBD status for P0967 in the DTCs/Freeze Data in A/T Mode Menu for a pass/fail.

    *Does the result indicate PASSED?*

    **YES**—If the PCM was updated, troubleshooting is complete. If the PCM was substituted, replace the original PCM (see page 11-252). If any other DTCs were indicated on step 12, go to the indicated DTC's troubleshooting. ■

    **NO**—If the HDS indicates FAILED, check for poor connections and loose terminals at A/T clutch pressure control solenoid valve B and the PCM. If the PCM was updated, substitute a known-good PCM (see page 14-10), then recheck. If the PCM was substituted, go to step 1. If the HDS indicates NOT COMPLETED, return to step 11 and recheck.

14. Clear the DTC with the HDS.

15. Test-drive the vehicle for several minutes in the D position through all five gears.

16. Check for DTC(s) in the DTCs/Freeze Data in A/T Mode Menu with the HDS.

    *Is DTC P0967 indicated?*

    **YES**—Check for poor connections and loose terminals at A/T clutch pressure control solenoid valve B and the PCM, then Go to step 1.

    **NO**—Go to step 17.

17. Monitor the OBD status for P0967 in the DTCs/Freeze Data in A/T Mode Menu for a pass/fail.

    *Does the result indicate PASSED?*

    **YES**—Troubleshooting is complete. If any other DTCs were indicated on step 16, go to the indicated DTC's troubleshooting. ■

    **NO**—If the HDS indicates FAILED, check for poor connections and loose terminals at A/T clutch pressure control solenoid valve B and the PCM, then go to step 1. If the HDS indicates NOT COMPLETED, return to step 15 and recheck.

Protected by AR



## DTC Troubleshooting (cont'd)

### DTC P0970: Problem in A/T Clutch Pressure Control Solenoid Valve C Circuit

NOTE:
- Before you troubleshoot, record all freeze data and any on-board snapshot, and review General Troubleshooting Information (see page 14-4).
- This code is caused by an electrical circuit problem and cannot be caused by a mechanical problem in the transmission.

1. Clear the DTC with the HDS.

2. Check that DTC P0970 recurs.

   *Is DTC P0970 indicated?*

   **YES**—Go to step 6.

   **NO**—Go to step 3.

3. Choose Clutch Pressure Control (Linear) Solenoid C in the Miscellaneous Test Menu, and test A/T clutch pressure control solenoid valve C with the HDS.

   *Is the result NORMAL?*

   **YES**—Go to step 4.

   **NO**—Go to step 6.

4. Choose Clutch Pressure Control Solenoid Control in the Miscellaneous Test Menu, and command A/T clutch pressure control solenoid valve C at 1.0 A with the HDS.

5. Monitor the OBD status for P0970 in the DTCs/ Freeze Data in A/T Mode Menu for a pass/fail.

   *Does the result indicate FAILED?*

   **YES**—Go to step 6.

   **NO**—Intermittent failure, the system is OK at this time. Check for poor connections and loose terminals at A/T clutch pressure control solenoid valve C and the PCM. If the HDS indicates NOT COMPLETED, return to step 3 and recheck.

6. Turn the ignition switch OFF.

7. Disconnect the A/T clutch pressure control solenoid valve C connector.

8. Measure the resistance between A/T clutch pressure control solenoid valve C connector terminals No. 1 and No. 2.

**A/T CLUTCH PRESSURE CONTROL SOLENOID VALVE C CONNECTOR**

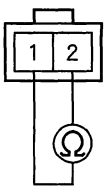


Terminal side of male terminals

*Is there 3– 10 Ω ?*

**YES**—Go to step 9.

**NO**—Replace A/T clutch pressure control solenoid valve C (see page 14-231), then go to step 16.



BACK

Protected by AR

9. Check for continuity between A/T clutch pressure control solenoid valve C connector terminal No. 2 and body ground.

**A/T CLUTCH PRESSURE CONTROL SOLENOID VALVE C CONNECTOR**

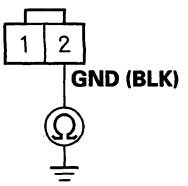


Wire side of female terminals

*Is there continuity?*

**YES**—Go to step 10.

**NO**—Repair open in the wire between A/T clutch pressure control solenoid valve C and ground (G101), or repair poor ground (G101), then go to step 16.

10. Turn the ignition switch ON (II).

11. Measure the voltage between A/T clutch pressure control solenoid valve C connector terminals No. 1 and No. 2.

**A/T CLUTCH PRESSURE CONTROL SOLENOID VALVE C CONNECTOR**

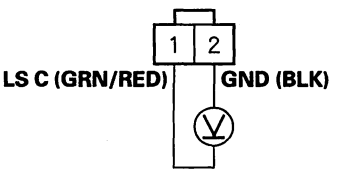


Wire side of female terminals

*Is there voltage?*

**YES**—Go to step 12.

**NO**—Repair open or short in the wire between PCM connector terminal B25 and A/T clutch pressure control solenoid valve C, then go to step 16.

(cont'd)

Protected by AR



## DTC Troubleshooting (cont'd)

12. Update the A/T software in the PCM if it does not have the latest software (see page 14-8), or substitute a known-good PCM (see page 14-10).

13. Test-drive the vehicle for several minutes in the D position through all five gears.

14. Check for DTC(s) in the DTCs/Freeze Data in A/T Mode Menu with the HDS.

    *Is DTC P0970 indicated?*

    **YES**—If the PCM was updated, substitute a known-good PCM (see page 14-10), then recheck. If the PCM was substituted, go to step 1.

    **NO**—Go to step 15.

15. Monitor the OBD status for P0970 in the DTCs/Freeze Data in A/T Mode Menu for a pass/fail.

    *Does the result indicate PASSED?*

    **YES**—If the PCM was updated, troubleshooting is complete. If the PCM was substituted, replace the original PCM (see page 11-252). If any other DTCs were indicated on step 14, go to the indicated DTC's troubleshooting.■

    **NO**—If the HDS indicates FAILED, check for poor connections and loose terminals at A/T clutch pressure control solenoid valve C and the PCM. If the PCM was updated, substitute a known-good PCM (see page 14-10), then recheck. If the PCM was substituted, go to step 1. If the HDS indicates NOT COMPLETED, return to step 13 and recheck.

16. Clear the DTC with the HDS.

17. Test-drive the vehicle for several minutes in the D position through all five gears.

18. Check for DTC(s) in the DTCs/Freeze Data in A/T Mode Menu with the HDS.

    *Is DTC P0970 indicated?*

    **YES**—Check for poor connections and loose terminals at A/T clutch pressure control solenoid valve C and the PCM, then go to step 1.

    **NO**—Go to step 19.

19. Monitor the OBD status for P0970 in the DTCs/Freeze Data in A/T Mode Menu for a pass/fail.

    *Does the result indicate PASSED?*

    **YES**—Troubleshooting is complete. If any other DTCs were indicated on step 18, go to the indicated DTC's troubleshooting.■

    **NO**—If the HDS indicates FAILED, check for poor connections and loose terminals at A/T clutch pressure control solenoid valve C and the PCM, then go to step 1. If the HDS indicates NOT COMPLETED, return to step 17 and recheck.



BACK

Protected by AR

## **DTC P0971:** Problem in A/T Clutch Pressure Control Solenoid Valve C

NOTE:
- Before you troubleshoot, record all freeze data and any on-board snapshot, and review General Troubleshooting Information (see page 14-4).
- This code is caused by an electrical circuit problem and cannot be caused by a mechanical problem in the transmission.

1. Clear the DTC with the HDS.

2. Check that DTC P0971 recurs.

   *Is DTC P0971 indicated?*

   **YES**—Go to step 6.

   **NO**—Go to step 3.

3. Choose Clutch Pressure Control (Linear) Solenoid C in the Miscellaneous Test Menu, and test A/T clutch pressure control solenoid valve C with the HDS.

   *Is the result NORMAL?*

   **YES**—Go to step 4.

   **NO**—Go to step 6.

4. Choose Clutch Pressure Control Solenoid Control in the Miscellaneous Test Menu, and command A/T clutch pressure control solenoid valve C at 0.2 A with the HDS.

5. Monitor the OBD status for P0971 in the DTCs/ Freeze Data in A/T Mode Menu for a pass/fail.

   *Does the result indicate FAILED?*

   **YES**—Go to step 6.

   **NO**—Intermittent failure, the system is OK at this time. Check for poor connections and loose terminals at A/T clutch pressure control solenoid valve C and the PCM. If the HDS indicates NOT COMPLETED, return to step 3 and recheck.

6. Turn the ignition switch OFF.

7. Disconnect the A/T clutch pressure control solenoid valve C connector.

8. Measure the resistance between A/T clutch pressure control solenoid valve C connector terminals No. 1 and No. 2.

**A/T CLUTCH PRESSURE CONTROL SOLENOID VALVE C CONNECTOR**

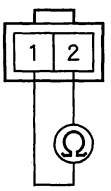


Terminal side of male terminals

*Is there 3– 10 Ω ?*

**YES**—Go to step 9.

**NO**—Replace A/T clutch pressure control solenoid valve C (see page 14-231), then go to step 14.

9. Check for continuity between A/T clutch pressure control solenoid valve C connector terminal No. 2 and body ground.

**A/T CLUTCH PRESSURE CONTROL SOLENOID VALVE C CONNECTOR**

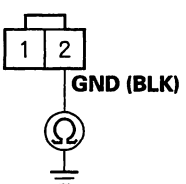


Wire side of female terminals

*Is there continuity?*

**YES**—Go to step 10.

**NO**—Repair open in the wire between A/T clutch pressure control solenoid valve C and ground (G101), or repair poor ground (G101), then go to step 14.

(cont'd)

Protected by AR



## DTC Troubleshooting (cont'd)

10. Update the A/T software in the PCM if it does not have the latest software (see page 14-8), or substitute a known-good PCM (see page 14-10).

11. Test-drive the vehicle for several minutes in the D position through all five gears.

12. Check for DTC(s) in the DTCs/Freeze Data in A/T Mode Menu with the HDS.

    *Is DTC P0971 indicated?*

    **YES**—If the PCM was updated, substitute a known-good PCM (see page 14-10), then recheck. If the PCM was substituted, go to step 1.

    **NO**—Go to step 13.

13. Monitor the OBD status for P0971 in the DTCs/Freeze Data in A/T Mode Menu for a pass/fail.

    *Does the result indicate PASSED?*

    **YES**—If the PCM was updated, troubleshooting is complete. If the PCM was substituted, replace the original PCM (see page 11-252). If any other DTCs were indicated on step 12, go to the indicated DTC's troubleshooting.■

    **NO**—If the HDS indicates FAILED, check for poor connections and loose terminals at A/T clutch pressure control solenoid valve C and the PCM. If the PCM was updated, substitute a known-good PCM (see page 14-10), then recheck. If the PCM was substituted, go to step 1. If the HDS indicates NOT COMPLETED, return to step 11 and recheck.

14. Clear the DTC with the HDS.

15. Test-drive the vehicle for several minutes in the D position through all five gears.

16. Check for DTC(s) in the DTCs/Freeze Data in A/T Mode Menu with the HDS.

    *Is DTC P0971 indicated?*

    **YES**—Check for poor connections and loose terminals at A/T clutch pressure control solenoid valve C and the PCM, then go to step 1.

    **NO**—Go to step 17.

17. Monitor the OBD status for P0971 in the DTCs/Freeze Data in A/T Mode Menu for a pass/fail.

    *Does the result indicate PASSED?*

    **YES**—Troubleshooting is complete. If any other DTCs were indicated on step 16, go to the indicated DTC's troubleshooting.■

    **NO**—If the HDS indicates FAILED, check for poor connections and loose terminals at A/T clutch pressure control solenoid valve C and the PCM, then go to step 1. If the HDS indicates NOT COMPLETED, return to step 15 and recheck.



BACK

Protected by AR

## **DTC P0973:** Short in Shift Solenoid Valve A Circuit

NOTE:
- Before you troubleshoot, record all freeze data and any on-board snapshot, and review General Troubleshooting Information (see page 14-4).
- This code is caused by an electrical circuit problem and cannot be caused by a mechanical problem in the transmission.

1. Clear the DTC with the HDS.

2. Test-drive the vehicle for several minutes in the D position through all five gears.

3. Check that DTC P0973 recurs.

   *Is DTC P0973 indicated?*

   **YES**—Go to step 7.

   **NO**—Go to step 4.

4. Choose Shift Solenoid A in the Miscellaneous Test Menu, and test shift solenoid valve A with the HDS.

   *Is a clicking sound heard?*

   **YES**—Go to step 5.

   **NO**—Go to step 7.

5. Test-drive the vehicle for several minutes in the D position through all five gears.

6. Monitor the OBD status for P0973 in the DTCs/ Freeze Data in A/T Mode Menu for a pass/fail.

   *Does the result indicate FAILED?*

   **YES**—Go to step 7.

   **NO**—Intermittent failure, the system is OK at this time. Check the SH A wire for an intermittent short to ground between shift solenoid valve A and the PCM. If the HDS indicates NOT COMPLETED, return to step 4 and recheck.

7. Turn the ignition switch OFF.

8. Jump the SCS line with the HDS.

9. Disconnect PCM connectors B (44P) and C (44P).

10. Measure the resistance between PCM connector terminals B11 and C40 or C44.

**PCM CONNECTORS**

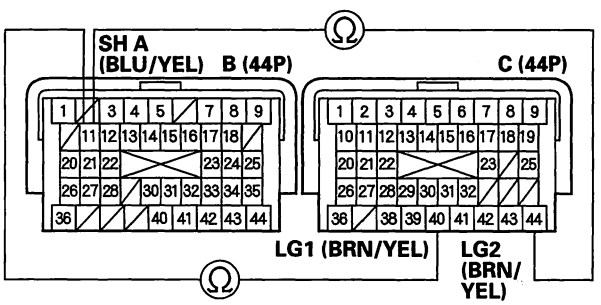


Terminal side of female terminals

*Is there less than 12 Ω ?*

**YES**—Go to step 11.

**NO**—Go to step 14.

(cont'd)

Protected by AR



## DTC Troubleshooting (cont'd)

11. Disconnect the shift solenoid harness connector.

12. Check for continuity between PCM connector terminals B11 and C40 or C44.

**PCM CONNECTORS**

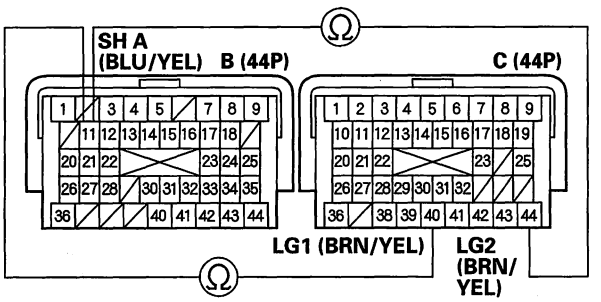


Terminal side of female terminals

*Is there continuity?*

**YES**—Repair short in the wire between PCM connector terminal B11 and the shift solenoid harness connector, then go to step 18.

**NO**—Go to step 13.

13. Inspect shift solenoid valve A (see page 14-216).

*Is shift solenoid valve A OK?*

**YES**—Go to step 14.

**NO**—Replace shift solenoid valve A or the shift solenoid harness (see page 14-216), then go to step 18.

14. Update the A/T software in the PCM if it does not have the latest software (see page 14-8), or substitute a known-good PCM (see page 14-10).

15. Test-drive the vehicle for several minutes in the D position through all five gears.

16. Check for DTC(s) in the DTCs/Freeze Data in A/T Mode Menu with the HDS.

*Is DTC P0973 indicated?*

**YES**—If the PCM was updated, substitute a known-good PCM (see page 14-10), then recheck. If the PCM was substituted, go to step 1.

**NO**—Go to step 17.

17. Monitor the OBD status for P0973 in the DTCs/Freeze Data in A/T Mode Menu for a pass/fail.

*Does the result indicate PASSED?*

**YES**—If the PCM was updated, troubleshooting is complete. If the PCM was substituted, replace the original PCM (see page 11-252). If any other DTCs were indicated on step 16, go to the indicated DTC's troubleshooting.■

**NO**—If the HDS indicates FAILED, check for poor connections and loose terminals at shift solenoid valve A and the PCM. If the PCM was updated, substitute a known-good PCM (see page 14-10), then recheck. If the PCM was substituted, go to step 1. If the HDS indicates NOT COMPLETED, return to step 15 and recheck.



BACK

Protected by AR

18. Clear the DTC with the HDS.

19. Test-drive the vehicle for several minutes in the D position through all five gears.

20. Check for DTC(s) in the DTCs/Freeze Data in A/T Mode Menu with the HDS.

    *Is DTC P0973 indicated?*

    **YES**—Check for poor connections and loose terminals at shift solenoid valve A and the PCM, then go to step 1.

    **NO**—Go to step 21.

21. Monitor the OBD status for P0973 in the DTCs/ Freeze Data in A/T Mode Menu for a pass/fail.

    *Does the result indicate PASSED?*

    **YES**—Troubleshooting is complete. If any other DTCs were indicated on step 20, go to the indicated DTC's troubleshooting. ■

    **NO**—If the HDS indicates FAILED, check for poor connections and loose terminals at shift solenoid valve A and the PCM, then go to step 1. If the HDS indicates NOT COMPLETED, return to step 19 and recheck.

Protected by AR



## DTC Troubleshooting (cont'd)

### DTC P0974: Open in Shift Solenoid Valve A Circuit

NOTE:
- Before you troubleshoot, record all freeze data and any on-board snapshot, and review General Troubleshooting Information (see page 14-4).
- This code is caused by an electrical circuit problem and cannot be caused by a mechanical problem in the transmission.

1. Clear the DTC with the HDS.

2. Test-drive the vehicle for several minutes in the D position through all five gears.

3. Check that DTC P0974 recurs.

   *Is DTC P0974 indicated?*

   **YES**—Go to step 7.

   **NO**—Go to step 4.

4. Choose Shift Solenoid A in the Miscellaneous Test Menu, and test shift solenoid valve A with the HDS.

   *Is a clicking sound heard?*

   **YES**—Go to step 5.

   **NO**—Go to step 7.

5. Test-drive the vehicle for several minutes in the D position through all five gears.

6. Monitor the OBD status for P0974 in the DTCs/ Freeze Data in A/T Mode Menu for a pass/fail.

   *Does the result indicate FAILED?*

   **YES**—Go to step 7.

   **NO**—Intermittent failure, the system is OK at this time. Check for poor connections or loose terminals at shift solenoid valve A and the PCM. If the HDS indicates NOT COMPLETED, return to step 4 and recheck.

7. Turn the ignition switch OFF.

8. Jump the SCS line with the HDS.

9. Disconnect PCM connectors B (44P) and C (44P).

10. Measure the resistance between PCM connector terminals B11 and C40 or C44.

**PCM CONNECTORS**

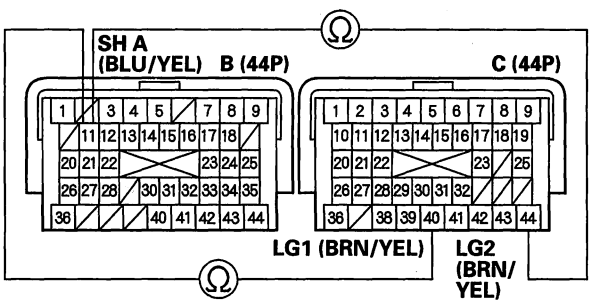


Terminal side of female terminals

*Is there 12—25 Ω ?*

**YES**—Go to step 15.

**NO**—Go to step 11.



BACK

Protected by AR

11. Disconnect the shift solenoid harness connector.

12. Check for continuity between PCM connector terminal B11 and shift solenoid harness connector terminal No. 3.

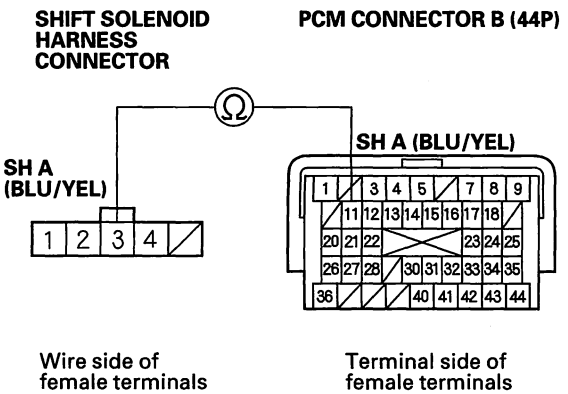


*Is there continuity?*

**YES**—Go to step 13.

**NO**—Repair open in the wire between PCM connector terminal B11 and the shift solenoid harness connector, then go to step 19.

13. Remove the shift solenoid harness (see page 14-216).

14. Check for continuity between shift solenoid harness connector terminal No. 3 and the shift solenoid valve A connector terminal.

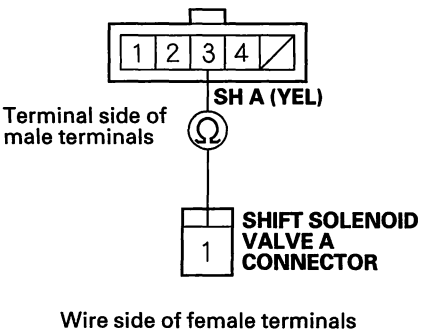


*Is there continuity?*

**YES**—Replace shift solenoid valve A (see page 14-216), then go to step 19.

**NO**—Replace the shift solenoid harness (see page 14-216), then go to step 19.

(cont'd)

Protected by AR



## DTC Troubleshooting (cont'd)

15. Update the A/T software in the PCM if it does not have the latest software (see page 14-8), or substitute a known-good PCM (see page 14-10).

16. Test-drive the vehicle for several minutes in the D position through all five gears.

17. Check for DTC(s) in the DTCs/Freeze Data in A/T Mode Menu with the HDS.

    *Is DTC P0974 indicated?*

    **YES**—If the PCM was updated, substitute a known-good PCM (see page 14-10), then recheck. If the PCM was substituted, go to step 1.

    **NO**—Go to step 18.

18. Monitor the OBD status for P0974 in the DTCs/Freeze Data in A/T Mode Menu for a pass/fail.

    *Does the result indicate PASSED?*

    **YES**—If the PCM was updated, troubleshooting is complete. If the PCM was substituted, replace the original PCM (see page 11-252). If any other DTCs were indicated on step 17, go to the indicated DTC's troubleshooting.■

    **NO**—If the HDS indicates FAILED, check for poor connections and loose terminals at shift solenoid valve A and the PCM. If the PCM was updated, substitute a known-good PCM (see page 14-10), then recheck. If the PCM was substituted, go to step 1. If the HDS indicates NOT COMPLETED, return to step 16 and recheck.

19. Clear the DTC with the HDS.

20. Test-drive the vehicle for several minutes in the D position through all five gears.

21. Check for DTC(s) in the DTCs/Freeze Data in A/T Mode Menu with the HDS.

    *Is DTC P0974 indicated?*

    **YES**—Check for poor connections and loose terminals at shift solenoid valve A and the PCM, then go to step 1.

    **NO**—Go to step 22.

22. Monitor the OBD status for P0974 in the DTCs/Freeze Data in A/T Mode Menu for a pass/fail.

    *Does the result indicate PASSED?*

    **YES**—Troubleshooting is complete. If any other DTCs were indicated on step 21, go to the indicated DTC's troubleshooting.■

    **NO**—If the HDS indicates FAILED, check for poor connections and loose terminals at shift solenoid valve A and the PCM, then go to step 1. If the HDS indicates NOT COMPLETED, return to step 20 and recheck.



BACK

Protected by AR

## **DTC P0976:** Short in Shift Solenoid Valve B Circuit

NOTE:
- Before you troubleshoot, record all freeze data and any on-board snapshot, and review General Troubleshooting Information (see page 14-4).
- This code is caused by an electrical circuit problem and cannot be caused by a mechanical problem in the transmission.

1. Clear the DTC with the HDS.

2. Test-drive the vehicle for several minutes in the D position through all five gears.

3. Check that DTC P0976 recurs.

   *Is DTC P0976 indicated?*

   **YES**—Go to step 7.

   **NO**—Go to step 4.

4. Choose Shift Solenoid B in the Miscellaneous Test Menu, and test shift solenoid valve B with the HDS.

   *Is a clicking sound heard?*

   **YES**—Go to step 5.

   **NO**—Go to step 7.

5. Test-drive the vehicle for several minutes in the D position through all five gears.

6. Monitor the OBD status for P0976 in the DTCs/ Freeze Data in A/T Mode Menu for a pass/fail.

   *Does the result indicate FAILED?*

   **YES**—Go to step 7.

   **NO**—Intermittent failure, the system is OK at this time. Check the SH B wire for an intermittent short to ground between shift solenoid valve B and the PCM. If the HDS indicates NOT COMPLETED, return to step 4 and recheck.

7. Turn the ignition switch OFF.

8. Jump the SCS line with the HDS.

9. Disconnect PCM connectors B (44P) and C (44P).

10. Measure the resistance between PCM connector terminals B26 and C40 or C44.

**PCM CONNECTORS**

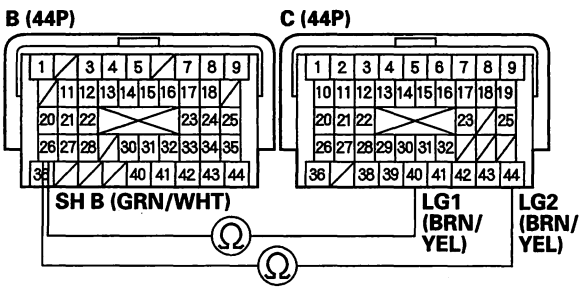


Terminal side of female terminals

*Is there less than 12 Ω ?*

**YES**—Go to step 11.

**NO**—Go to step 14.

(cont'd)

Protected by AR



## DTC Troubleshooting (cont'd)

11. Disconnect the shift solenoid harness connector.

12. Check for continuity between PCM connector terminals B26 and C40 or C44.

**PCM CONNECTORS**

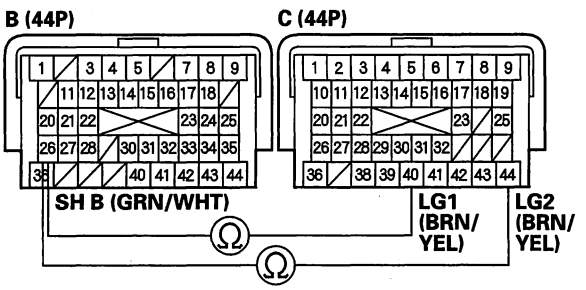


Terminal side of female terminals

*Is there continuity?*

**YES**—Repair short in the wire between PCM connector terminal B26 and the shift solenoid harness connector, then go to step 18.

**NO**—Go to step 13.

13. Inspect shift solenoid valve B (see page 14-216).

*Is shift solenoid valve B OK?*

**YES**—Go to step 14.

**NO**—Replace shift solenoid valve B or the shift solenoid harness (see page 14-216), then go to step 18.

14. Update the A/T software in the PCM if it does not have the latest software (see page 14-8), or substitute a known-good PCM (see page 14-10).

15. Test-drive the vehicle for several minutes in the D position through all five gears.

16. Check for DTC(s) in the DTCs/Freeze Data in A/T Mode Menu with the HDS.

*Is DTC P0976 indicated?*

**YES**—If the PCM was updated, substitute a known-good PCM (see page 14-10), then recheck. If the PCM was substituted, go to step 1.

**NO**—Go to step 17.

17. Monitor the OBD status for P0976 in the DTCs/ Freeze Data in A/T Mode Menu for a pass/fail.

*Does the result indicate PASSED?*

**YES**—If the PCM was updated, troubleshooting is complete. If the PCM was substituted, replace the original PCM (see page 11-252). If any other DTCs were indicated on step 16, go to the indicated DTC's troubleshooting.■

**NO**—If the HDS indicates FAILED, check for poor connections and loose terminals at shift solenoid valve B and the PCM. If the PCM was updated, substitute a known-good PCM (see page 14-10), then recheck. If the PCM was substituted, go to step 1. If the HDS indicates NOT COMPLETED, return to step 16 and recheck.



BACK

Protected by AR

18. Clear the DTC with the HDS.

19. Test-drive the vehicle for several minutes in the D position through all five gears.

20. Check for DTC(s) in the DTCs/Freeze Data in A/T Mode Menu with the HDS.

    *Is DTC P0976 indicated?*

    **YES**—Check for poor connections and loose terminals at shift solenoid valve B and the PCM, then go to step 1.

    **NO**—Go to step 21.

21. Monitor the OBD status for P0976 in the DTCs/ Freeze Data in A/T Mode Menu for a pass/fail.

    *Does the result indicate PASSED?*

    **YES**—Troubleshooting is complete. If any other DTCs were indicated on step 20, go to the indicated DTC's troubleshooting. ■

    **NO**—If the HDS indicates FAILED, check for poor connections and loose terminals at shift solenoid valve B and the PCM, then go to step 1. If the HDS indicates NOT COMPLETED, return to step 19 and recheck.

Protected by AR



## DTC Troubleshooting (cont'd)

### **DTC P0977:** Open in Shift Solenoid Valve B Circuit

NOTE:
- Before you troubleshoot, record all freeze data and any on-board snapshot, and review General Troubleshooting Information (see page 14-4).
- This code is caused by an electrical circuit problem and cannot be caused by a mechanical problem in the transmission.

1. Clear the DTC with the HDS.

2. Test-drive the vehicle for several minutes in the D position through all five gears.

3. Check that DTC P0977 recurs.

   *Is DTC P0977 indicated?*

   **YES**—Go to step 7.

   **NO**—Go to step 4.

4. Choose Shift Solenoid B in the Miscellaneous Test Menu, and test shift solenoid valve B with the HDS.

   *Is a clicking sound heard?*

   **YES**—Go to step 5.

   **NO**—Go to step 7.

5. Test-drive the vehicle for several minutes in the D position through all five gears.

6. Monitor the OBD status for P0977 in the DTCs/ Freeze Data in A/T Mode Menu for a pass/fail.

   *Does the result indicate FAILED?*

   **YES**—Go to step 7.

   **NO**—Intermittent failure, the system is OK at this time. Check for poor connections or loose terminals at shift solenoid valve B and the PCM. If the HDS indicates NOT COMPLETED, return to step 4 and recheck.

7. Turn the ignition switch OFF.

8. Jump the SCS line with the HDS.

9. Disconnect PCM connectors B (44P) and C (44P).

10. Measure the resistance between PCM connector terminals B26 and C40 or C44.

**PCM CONNECTORS**

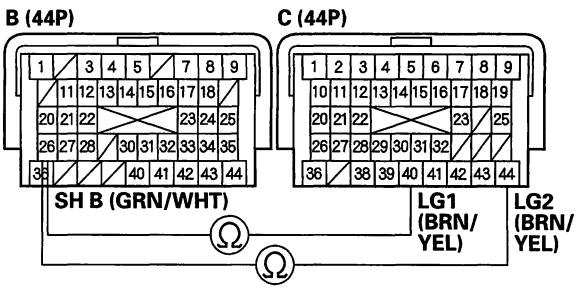


Terminal side of female terminals

*Is there 12—25 Ω ?*

**YES**—Go to step 15.

**NO**—Go to step 11.



BACK

Protected by AR

11. Disconnect the shift solenoid harness connector.

12. Check for continuity between PCM connector terminal B26 and shift solenoid harness connector terminal No. 4.

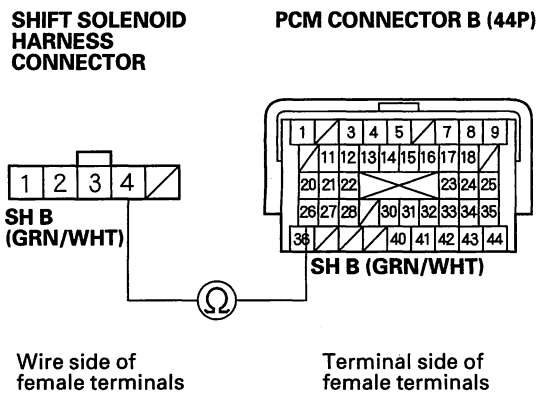


*Is there continuity?*

**YES**—Go to step 13.

**NO**—Repair open in the wire between PCM connector terminal B26 and the shift solenoid harness connector, then go to step 15.

13. Remove the shift solenoid harness (see page 14-216).

14. Check for continuity between shift solenoid harness connector terminal No. 4 and the shift solenoid valve B connector terminal.

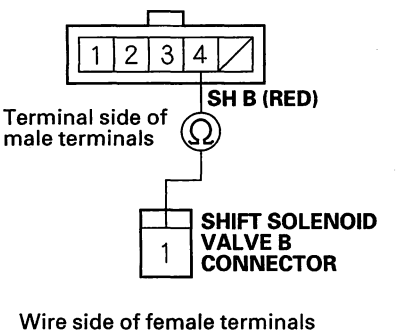


*Is there continuity?*

**YES**—Replace shift solenoid valve B (see page 14-216), then go to step 19.

**NO**—Replace the shift solenoid harness (see page 14-216), then go to step 19.

(cont'd)

Protected by AR



## DTC Troubleshooting (cont'd)

15. Update the A/T software in the PCM if it does not have the latest software (see page 14-8), or substitute a known-good PCM (see page 14-10).

16. Test-drive the vehicle for several minutes in the D position through all five gears.

17. Check for DTC(s) in the DTCs/Freeze Data in A/T Mode Menu with the HDS.

    *Is DTC P0977 indicated?*

    **YES**—If the PCM was updated, substitute a known-good PCM (see page 14-10), then recheck. If the PCM was substituted, go to step 1.

    **NO**—Go to step 18.

18. Monitor the OBD status for P0977 in the DTCs/Freeze Data in A/T Mode Menu for a pass/fail.

    *Does the result indicate PASSED?*

    **YES**—If the PCM was updated, troubleshooting is complete. If the PCM was substituted, replace the original PCM (see page 11-252). If any other DTCs were indicated on step 17, go to the indicated DTC's troubleshooting.■

    **NO**—If the HDS indicates FAILED, check for poor connections and loose terminals at shift solenoid valve B and the PCM. If the PCM was updated, substitute a known-good PCM (see page 14-10), then recheck. If the PCM was substituted, go to step 1. If the HDS indicates NOT COMPLETED, return to step 16 and recheck.

19. Clear the DTC with the HDS.

20. Test-drive the vehicle for several minutes in the D position through all five gears.

21. Check for DTC(s) in the DTCs/Freeze Data in A/T Mode Menu with the HDS.

    *Is DTC P0977 indicated?*

    **YES**—Check for poor connections and loose terminals at shift solenoid valve B and the PCM, then go to step 1.

    **NO**—Go to step 22.

22. Monitor the OBD status for P0977 in the DTCs/Freeze Data in A/T Mode Menu for a pass/fail.

    *Does the result indicate PASSED?*

    **YES**—Troubleshooting is complete. If any other DTCs were indicated on step 21, go to the indicated DTC's troubleshooting.■

    **NO**—If the HDS indicates FAILED, check for poor connections and loose terminals at shift solenoid valve B and the PCM, then go to step 1. If the HDS indicates NOT COMPLETED, return to step 20 and recheck.



BACK

Protected by AR

## **DTC P0979:** Short in Shift Solenoid Valve C Circuit

NOTE:
- Before you troubleshoot, record all freeze data and any on-board snapshot, and review General Troubleshooting Information (see page 14-4).
- This code is caused by an electrical circuit problem and cannot be caused by a mechanical problem in the transmission.

1. Clear the DTC with the HDS.

2. Test-drive the vehicle for several minutes in the D position through all five gears.

3. Check that DTC P0979 recurs.

   *Is DTC P0979 indicated?*

   **YES**—Go to step 7.

   **NO**—Go to step 4.

4. Choose Shift Solenoid C in the Miscellaneous Test Menu, and test shift solenoid valve C with the HDS.

   *Is a clicking sound heard?*

   **YES**—Go to step 5.

   **NO**—Go to step 7.

5. Test-drive the vehicle for several minutes in the D position through all five gears.

6. Monitor the OBD status for P0979 in the DTCs/ Freeze Data in A/T Mode Menu for a pass/fail.

   *Does the result indicate FAILED?*

   **YES**—Go to step 7.

   **NO**—Intermittent failure, the system is OK at this time. Check the SH C wire for an intermittent short to ground between shift solenoid valve C and the PCM. If the HDS indicates NOT COMPLETED, return to step 4 and recheck.

7. Turn the ignition switch OFF.

8. Jump the SCS line with the HDS.

9. Disconnect PCM connectors B (44P) and C (44P).

10. Measure the resistance between PCM connector terminals B20 and C40 or C44.

**PCM CONNECTORS**

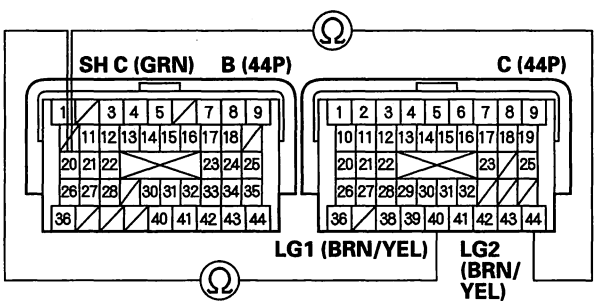


Terminal side of female terminals

*Is there less than 12 Ω ?*

**YES**—Go to step 11.

**NO**—Go to step 14.

(cont'd)

Protected by AR



## DTC Troubleshooting (cont'd)

11. Disconnect the shift solenoid harness connector.

12. Check for continuity between PCM connector terminals B20 and C40 or C44.

**PCM CONNECTORS**

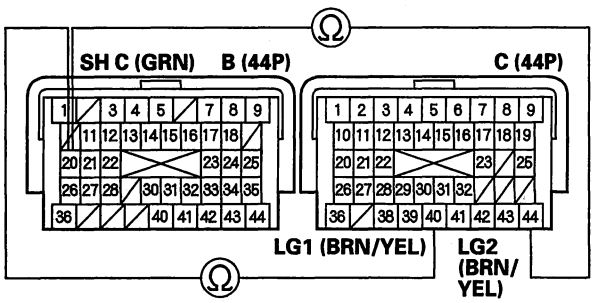


Terminal side of female terminals

*Is there continuity?*

**YES**—Repair short in the wire between PCM connector terminal B20 and the shift solenoid harness connector, then go to step 18.

**NO**—Go to step 13.

13. Inspect shift solenoid valve C (see page 14-216).

*Is shift solenoid valve C OK?*

**YES**—Go to step 14.

**NO**—Replace shift solenoid valve C or the shift solenoid harness (see page 14-216), then go to step 18.

14. Update the A/T software in the PCM if it does not have the latest software (see page 14-8), or substitute a known-good PCM (see page 14-10).

15. Test-drive the vehicle for several minutes in the D position through all five gears.

16. Check for DTC(s) in the DTCs/Freeze Data in A/T Mode Menu with the HDS.

*Is DTC P0979 indicated?*

**YES**—If the PCM was updated, substitute a known-good PCM (see page 14-10), then recheck. If the PCM was substituted, go to step 1.

**NO**—Go to step 17.

17. Monitor the OBD status for P0979 in the DTCs/ Freeze Data in A/T Mode Menu for a pass/fail.

*Does the result indicate PASSED?*

**YES**—If the PCM was updated, troubleshooting is complete. If the PCM was substituted, replace the original PCM (see page 11-252). If any other DTCs were indicated on step 16, go to the indicated DTC's troubleshooting.■

**NO**—If the HDS indicates FAILED, check for poor connections and loose terminals at shift solenoid valve C and the PCM. If the PCM was updated, substitute a known-good PCM (see page 14-10), then recheck. If the PCM was substituted, go to step 1. If the HDS indicates NOT COMPLETED, return to step 15 and recheck.



BACK

Protected by AR

18. Clear the DTC with the HDS.

19. Test-drive the vehicle for several minutes in the D position through all five gears.

20. Check for DTC(s) in the DTCs/Freeze Data in A/T Mode Menu with the HDS.

    *Is DTC P0979 indicated?*

    **YES**—Check for poor connections and loose terminals at shift solenoid valve C and the PCM, then go to step 1.

    **NO**—Go to step 21.

21. Monitor the OBD status for P0979 in the DTCs/Freeze Data in A/T Mode Menu for a pass/fail.

    *Does the result indicate PASSED?*

    **YES**—Troubleshooting is complete. If any other DTCs were indicated on step 20, go to the indicated DTC's troubleshooting. ■

    **NO**—If the HDS indicates FAILED, check for poor connections and loose terminals at shift solenoid valve C and the PCM, then go to step 1. If the HDS indicates NOT COMPLETED, return to step 19 and recheck.

Protected by AR



## DTC Troubleshooting (cont'd)

### DTC P0980: Open in Shift Solenoid Valve C Circuit

NOTE:
- Before you troubleshoot, record all freeze data and any on-board snapshot, and review General Troubleshooting Information (see page 14-4).
- This code is caused by an electrical circuit problem and cannot be caused by a mechanical problem in the transmission.

1. Clear the DTC with the HDS.

2. Test-drive the vehicle for several minutes in the D position through all five gears.

3. Check that DTC P0980 recurs.

   *Is DTC P0980 indicated?*

   **YES**—Go to step 7.

   **NO**—Go to step 4.

4. Choose Shift Solenoid C in the Miscellaneous Test Menu, and test shift solenoid valve C with the HDS.

   *Is a clicking sound heard?*

   **YES**—Go to step 5.

   **NO**—Go to step 7.

5. Test-drive the vehicle for several minutes in the D position through all five gears.

6. Monitor the OBD status for P0980 in the DTCs/ Freeze Data in A/T Mode Menu for a pass/fail.

   *Does the result indicate FAILED?*

   **YES**—Go to step 7.

   **NO**—Intermittent failure, the system is OK at this time. Check for poor connections or loose terminals at shift solenoid valve C and the PCM. If the HDS indicates NOT COMPLETED, return to step 4 and recheck.

7. Turn the ignition switch OFF.

8. Jump the SCS line with the HDS.

9. Disconnect PCM connectors B (44P) and C (44P).

10. Measure the resistance between PCM connector terminals B20 and C40 or C44.

**PCM CONNECTORS**

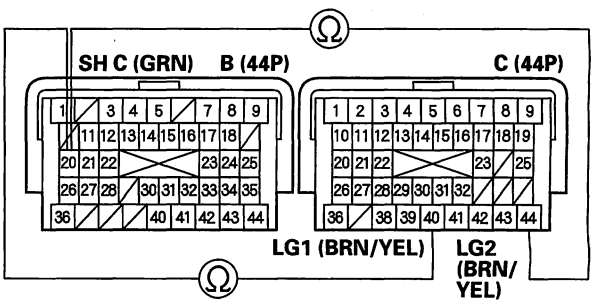


Terminal side of female terminals

*Is there 12—25 Ω ?*

**YES**—Go to step 15.

**NO**—Go to step 11.



BACK

Protected by AR

11. Disconnect the shift solenoid harness connector.

12. Check for continuity between PCM connector terminal B20 and shift solenoid harness connector terminal No. 2.

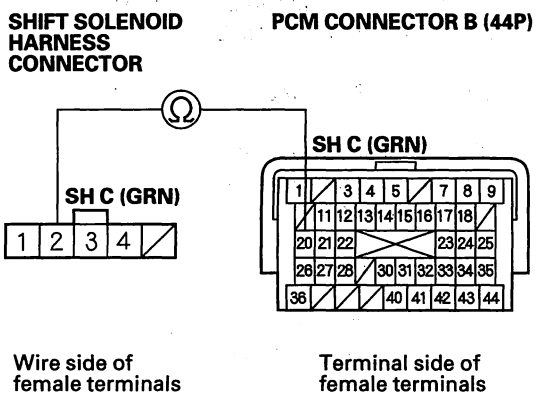


*Is there continuity?*

**YES**—Go to step 13.

**NO**—Repair open in the wire between PCM connector terminal B20 and the shift solenoid harness connector, then go to step 19.

13. Remove the shift solenoid harness (see page 14-216).

14. Check for continuity between shift solenoid harness connector terminal No. 2 and the shift solenoid valve C connector terminal.

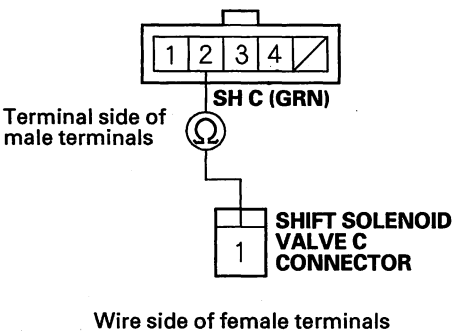


*Is there continuity?*

**YES**—Replace shift solenoid valve C (see page 14-216), then go to step 19.

**NO**—Replace the shift solenoid harness (see page 14-216), then go to step 19.

(cont'd)

Protected by AR



## DTC Troubleshooting (cont'd)

15. Update the A/T software in the PCM if it does not have the latest software (see page 14-8), or substitute a known-good PCM (see page 14-10).

16. Test-drive the vehicle for several minutes in the D position through all five gears.

17. Check for DTC(s) in the DTCs/Freeze Data in A/T Mode Menu with the HDS.

    *Is DTC P0980 indicated?*

    **YES**—If the PCM was updated, substitute a known-good PCM (see page 14-10), then recheck. If the PCM was substituted, go to step 1.

    **NO**—Go to step 18.

18. Monitor the OBD status for P0980 in the DTCs/Freeze Data in A/T Mode Menu for a pass/fail.

    *Does the result indicate PASSED?*

    **YES**—If the PCM was updated, troubleshooting is complete. If the PCM was substituted, replace the original PCM (see page 11-252). If any other DTCs were indicated on step 17, go to the indicated DTC's troubleshooting.■

    **NO**—If the HDS indicates FAILED, check for poor connections and loose terminals at shift solenoid valve C and the PCM. If the PCM was updated, substitute a known-good PCM (see page 14-10), then recheck. If the PCM was substituted, go to step 1. If the HDS indicates NOT COMPLETED, return to step 16 and recheck.

19. Clear the DTC with the HDS.

20. Test-drive the vehicle for several minutes in the D position through all five gears.

21. Check for DTC(s) in the DTCs/Freeze Data in A/T Mode Menu with the HDS.

    *Is DTC P0980 indicated?*

    **YES**—Check for poor connections and loose terminals at shift solenoid valve C and the PCM, then go to step 1.

    **NO**—Go to step 22.

22. Monitor the OBD status for P0980 in the DTCs/Freeze Data in A/T Mode Menu for a pass/fail.

    *Does the result indicate PASSED?*

    **YES**—Troubleshooting is complete. If any other DTCs were indicated on step 21, go to the indicated DTC's troubleshooting.■

    **NO**—If the HDS indicates FAILED, check for poor connections and loose terminals at shift solenoid valve C and the PCM, then go to step 1. If the HDS indicates NOT COMPLETED, return to step 20 and recheck.



BACK

Protected by AR

## **DTC P0982:** Short in Shift Solenoid Valve D Circuit

NOTE:
- Before you troubleshoot, record all freeze data and any on-board snapshot, and review General Troubleshooting Information (see page 14-4).
- This code is caused by an electrical circuit problem and cannot be caused by a mechanical problem in the transmission.

1. Clear the DTC with the HDS.

2. Test-drive the vehicle for several minutes in the D position through all five gears.

3. Check that DTC P0982 recurs.

   *Is DTC P0982 indicated?*

   **YES**—Go to step 7.

   **NO**—Go to step 4.

4. Choose Shift Solenoid D in the Miscellaneous Test Menu, and test shift solenoid valve D with the HDS.

   *Is a clicking sound heard?*

   **YES**—Go to step 5.

   **NO**—Go to step 7.

5. Test-drive the vehicle for several minutes in the D position through all five gears.

6. Monitor the OBD status for P0982 in the DTCs/ Freeze Data in A/T Mode Menu for a pass/fail.

   *Does the result indicate FAILED?*

   **YES**—Go to step 7.

   **NO**—Intermittent failure, the system is OK at this time. Check the SH D wire for an intermittent short to ground between shift solenoid valve D and the PCM. If the HDS indicates NOT COMPLETED, return to step 4 and recheck.

7. Turn the ignition switch OFF.

8. Jump the SCS line with the HDS.

9. Disconnect PCM connectors B (44P) and C (44P).

10. Measure the resistance between PCM connector terminals B24 and C40 or C44.

**PCM CONNECTORS**

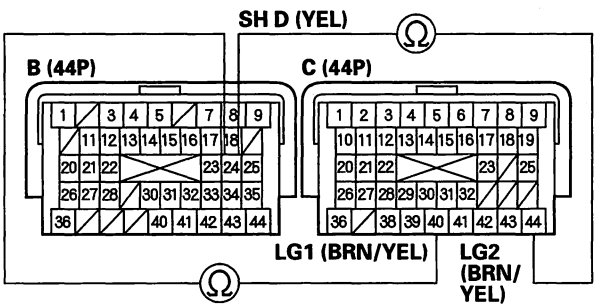


Terminal side of female terminals

*Is there less than 12 Ω ?*

**YES**—Go to step 11.

**NO**—Go to step 14.

(cont'd)

Protected by AR



## DTC Troubleshooting (cont'd)

11. Disconnect the shift solenoid harness connector.

12. Check for continuity between PCM connector terminals B24 and C40 or C44.

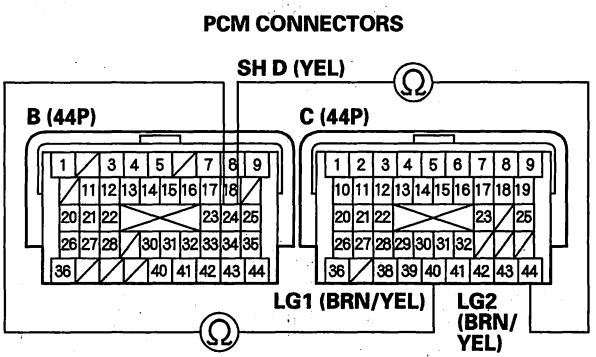


Terminal side of female terminals

*Is there continuity?*

**YES**—Repair short in the wire between PCM connector terminal B24 and the shift solenoid harness connector, then go to step 18.

**NO**—Go to step 13.

13. Inspect shift solenoid valve D (see page 14-216).

*Is shift solenoid valve D OK?*

**YES**—Go to step 14.

**NO**—Replace shift solenoid valve D or the shift solenoid harness (see page 14-216), then go to step 18.

14. Update the A/T software in the PCM if it does not have the latest software (see page 14-8), or substitute a known-good PCM (see page 14-10).

15. Test-drive the vehicle for several minutes in the D position through all five gears.

16. Check for DTC(s) in the DTCs/Freeze Data in A/T Mode Menu with the HDS.

*Is DTC P0982 indicated?*

**YES**—If the PCM was updated, substitute a known-good PCM (see page 14-10), then recheck. If the PCM was substituted, go to step 1.

**NO**—Go to step 17.

17. Monitor the OBD status for P0982 in the DTCs/ Freeze Data in A/T Mode Menu for a pass/fail.

*Does the result indicate PASSED?*

**YES**—If the PCM was updated, troubleshooting is complete. If the PCM was substituted, replace the original PCM (see page 11-252). If any other DTCs were indicated on step 16, go to the indicated DTC's troubleshooting.■

**NO**—If the HDS indicates FAILED, check for poor connections and loose terminals at shift solenoid valve D and the PCM. If the PCM was updated, substitute a known-good PCM (see page 14-10), then recheck. If the PCM was substituted, go to step 1. If the HDS indicates NOT COMPLETED, return to step 15 and recheck.



BACK

Protected by AR

18. Clear the DTC with the HDS.

19. Test-drive the vehicle for several minutes in the D position through all five gears.

20. Check for DTC(s) in the DTCs/Freeze Data in A/T Mode Menu with the HDS.

    *Is DTC P0982 indicated?*

    **YES**—Check for poor connections and loose terminals at shift solenoid valve D and the PCM, then go to step 1.

    **NO**—Go to step 21.

21. Monitor the OBD status for P0982 in the DTCs/Freeze Data in A/T Mode Menu for a pass/fail.

    *Does the result indicate PASSED?*

    **YES**—Troubleshooting is complete. If any other DTCs were indicated on step 20, go to the indicated DTC's troubleshooting. ■

    **NO**—If the HDS indicates FAILED, check for poor connections and loose terminals at shift solenoid valve D and the PCM, then go to step 1. If the HDS indicates NOT COMPLETED, return to step 19 and recheck.

Protected by AR



## DTC Troubleshooting (cont'd)

### **DTC P0983:** Open in Shift Solenoid Valve D Circuit

NOTE:
- Before you troubleshoot, record all freeze data and any on-board snapshot, and review General Troubleshooting Information (see page 14-4).
- This code is caused by an electrical circuit problem and cannot be caused by a mechanical problem in the transmission.

1. Clear the DTC with the HDS.

2. Test-drive the vehicle for several minutes in the D position through all five gears.

3. Check that DTC P0983 recurs.

   *Is DTC P0983 indicated?*

   **YES**—Go to step 7.

   **NO**—Go to step 4.

4. Choose Shift Solenoid D in the Miscellaneous Test Menu, and test shift solenoid valve D with the HDS.

   *Is a clicking sound heard?*

   **YES**—Go to step 5.

   **NO**—Go to step 7.

5. Test-drive the vehicle for several minutes in the D position through all five gears.

6. Monitor the OBD status for P0983 in the DTCs/ Freeze Data in A/T Mode Menu for a pass/fail.

   *Does the result indicate FAILED?*

   **YES**—Go to step 7.

   **NO**—Intermittent failure, the system is OK at this time. Check for poor connections or loose terminals at shift solenoid valve D and the PCM. If the HDS indicates NOT COMPLETED, return to step 4 and recheck.

7. Turn the ignition switch OFF.

8. Jump the SCS line with the HDS.

9. Disconnect PCM connectors B (44P) and C (44P).

10. Measure the resistance between PCM connector terminals B24 and C40 or C44.

**PCM CONNECTORS**

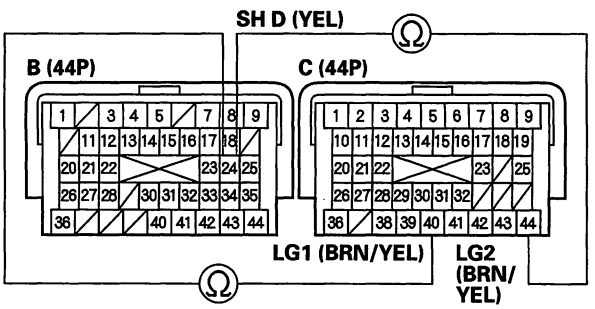


Terminal side of female terminals

*Is there 12—25 Ω ?*

**YES**—Go to step 15.

**NO**—Go to step 11.



BACK

Protected by AR

11. Disconnect the shift solenoid harness connector.

12. Check for continuity between PCM connector terminal B24 and shift solenoid harness connector terminal No. 1.

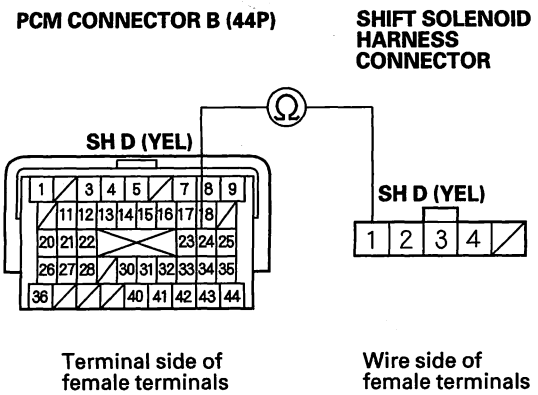


*Is there continuity?*

**YES**—Go to step 13.

**NO**—Repair open in the wire between PCM connector terminal B24 and the shift solenoid harness connector, then go to step 19.

13. Remove the shift solenoid harness (see page 14-216).

14. Check for continuity between shift solenoid harness connector terminal No. 1 and the shift solenoid valve D connector terminal.

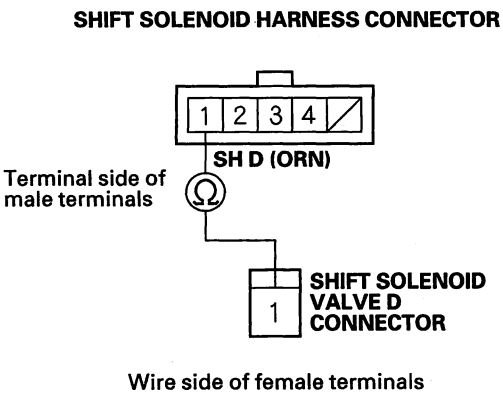


*Is there continuity?*

**YES**—Replace shift solenoid valve D (see page 14-216), then go to step 19.

**NO**—Replace the shift solenoid harness (see page 14-216), then go to step 19.

(cont'd)

Protected by AR



## DTC Troubleshooting (cont'd)

15. Update the A/T software in the PCM if it does not have the latest software (see page 14-8), or substitute a known-good PCM (see page 14-10).

16. Test-drive the vehicle for several minutes in the D position through all five gears.

17. Check for DTC(s) in the DTCs/Freeze Data in A/T Mode Menu with the HDS.

    *Is DTC P0983 indicated?*

    **YES**—If the PCM was updated, substitute a known-good PCM (see page 14-10), then recheck. If the PCM was substituted, go to step 1.

    **NO**—Go to step 18.

18. Monitor the OBD status for P0983 in the DTCs/Freeze Data in A/T Mode Menu for a pass/fail.

    *Does the result indicate PASSED?*

    **YES**—If the PCM was updated, troubleshooting is complete. If the PCM was substituted, replace the original PCM (see page 11-252). If any other DTCs were indicated on step 17, go to the indicated DTC's troubleshooting.■

    **NO**—If the HDS indicates FAILED, check for poor connections and loose terminals at shift solenoid valve D and the PCM. If the PCM was updated, substitute a known-good PCM (see page 14-10), then recheck. If the PCM was substituted, go to step 1. If the HDS indicates NOT COMPLETED, return to step 16 and recheck.

19. Clear the DTC with the HDS.

20. Test-drive the vehicle for several minutes in the D position through all five gears.

21. Check for DTC(s) in the DTCs/Freeze Data in A/T Mode Menu with the HDS.

    *Is DTC P0983 indicated?*

    **YES**—Check for poor connections and loose terminals at shift solenoid valve D and the PCM, then go to step 1.

    **NO**—Go to step 22.

22. Monitor the OBD status for P0983 in the DTCs/Freeze Data in A/T Mode Menu for a pass/fail.

    *Does the result indicate PASSED?*

    **YES**—Troubleshooting is complete. If any other DTCs were indicated on step 21, go to the indicated DTC's troubleshooting.■

    **NO**—If the HDS indicates FAILED, check for poor connections and loose terminals at shift solenoid valve D and the PCM, then go to step 1. If the HDS indicates NOT COMPLETED, return to step 20 and recheck.



BACK

Protected by AR

## **DTC P16C0:** PCM A/T Control System Incomplete Updated

NOTE:
- Before you troubleshoot, record all freeze data and any on-board snapshot, and review General Troubleshooting Information (see page 14-4).
- This code is indicated when PCM updating is incomplete.

1. Update the A/T software in the PCM (see page 14-8).

2. Check whether DTC P16C0 is indicated in the DTCs/ Freeze Data in A/T Mode Menu with the HDS.

   *Is DTC P16C0 indicated?*

   **YES**—Replace the original PCM (see page 11-252). ■

   **NO**—PCM updating is complete. ■

Protected by AR



## DTC Troubleshooting (cont'd)

### DTC P1717: Open in Transmission Range Switch ATP RVS Switch Circuit

NOTE:
- Before you troubleshoot, record all freeze data and any on-board snapshot, and review General Troubleshooting Information (see page 14-4).
- This code is caused by an electrical circuit problem and cannot be caused by a mechanical problem in the transmission.

1. Turn the ignition switch ON (II).

2. Shift to the R position, and check the A/T R SWITCH signal with the HDS in the A/T data list.

   *Is the A/T R SWITCH ON?*

   **YES**—Go to step 3.

   **NO**—Check for proper transmission range switch installation (see page 14-292), adjust the shift cable (see page 14-285), then recheck.■

3. Check the REVERSE SWITCH signal with the HDS.

   *Is the REVERSE SWITCH ON?*

   **YES**—Intermittent failure, the system is OK at this time.■

   **NO**—Go to step 4.

4. Turn the ignition switch OFF.

5. Disconnect the transmission range switch connector.

6. Check for continuity between transmission range switch connector terminal No. 5 and body ground.

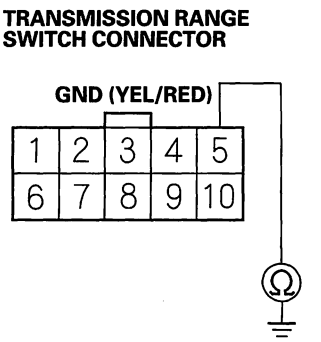


Wire side of female terminals

*Is there continuity?*

**YES**—Go to step 7.

**NO**—Repair open in the wire between transmission range switch connector terminal No. 5 and ground (G101), or repair poor ground (G101), then go to step 14.



BACK

Protected by AR

7. Turn the ignition switch ON (II).

8. Measure the voltage between transmission range switch connector terminals No. 5 and No. 9.

**TRANSMISSION RANGE SWITCH CONNECTOR**

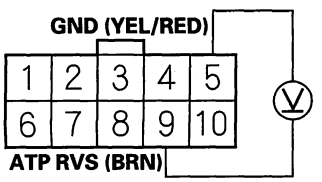


Wire side of female terminals

*Is there voltage?*

**YES**—Go to step 9.

**NO**—Repair open in the wire between PCM connector terminal B22 and the transmission range switch, then go to step 14.

9. Check for continuity between the No. 5 and No. 9 terminals at the transmission range switch.

**TRANSMISSION RANGE SWITCH CONNECTOR**

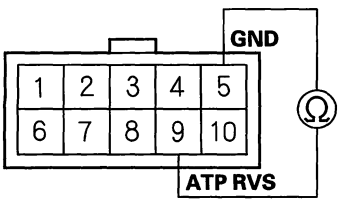


Terminal side of male terminals

*Is there continuity when the shift lever is in the P, R, and N positions, and no continuity when the shift lever is in the D and S positions?*

**YES**—Check for poor connections and loose terminals at the transmission range switch and the PCM. If the connections are OK, go to step 10.

**NO**—Replace the transmission range switch (see page 14-292), then go to step 14.

(cont'd)

Protected by AR



## DTC Troubleshooting (cont'd)

10. Update the A/T software in the PCM if it does not have the latest software (see page 14-8), or substitute a known-good PCM (see page 14-10).

11. Start the engine, and shift the shift lever slowly into the P and R positions, then into the N position.

12. Check for DTC(s) in the DTCs/Freeze Data in A/T Mode Menu with the HDS.

    *Is DTC P1717 indicated?*

    **YES**—If the PCM was updated, substitute a known-good PCM (see page 14-10), then recheck. If the PCM was substituted, go to step 1.

    **NO**—Go to step 13.

13. Monitor the OBD status for P1717 in the DTCs/Freeze Data in A/T Mode Menu for a pass/fail.

    *Does the result indicate PASSED?*

    **YES**—If the PCM was updated, troubleshooting is complete. If the PCM was substituted, replace the original PCM (see page 11-252). If any other DTCs were indicated on step 12, go to the indicated DTC's troubleshooting.■

    **NO**—If the HDS indicates FAILED, check for poor connections and loose terminals at the transmission range switch and the PCM. If the PCM was updated, substitute a known-good PCM (see page 14-10), then recheck. If the PCM was substituted, go to step 1. If the HDS indicates NOT COMPLETED, return to step 16 and recheck.

14. Clear the DTC with the HDS.

15. Start the engine, and shift the shift lever slowly into the P and R positions, then into the N position.

16. Check for DTC(s) in the DTCs/Freeze Data in A/T Mode Menu with the HDS.

    *Is DTC P1717 indicated?*

    **YES**—Check for poor connections and loose terminals at the transmission range switch and the PCM, then go to step 1.

    **NO**—Go to step 17.

17. Monitor the OBD status for P1717 in the DTCs/Freeze Data in A/T Mode Menu for a pass/fail.

    *Does the result indicate PASSED?*

    **YES**—Troubleshooting is complete. If any other DTCs were indicated on step 16, go to the indicated DTC's troubleshooting.■

    **NO**—If the HDS indicates FAILED, check for poor connections and loose terminals at the transmission range switch and the PCM, then go to step 1. If the HDS indicates NOT COMPLETED, return to step 15 and recheck.



BACK

Protected by AR

## **DTC P1743:** Problem in Shift Control System; Shift Valve E Stuck OFF

NOTE: Before you troubleshoot, record all freeze data and any on-board snapshot, and review General Troubleshooting Information (see page 14-4).

1. Warm up the engine to normal operating temperature (the radiator fan comes on).

2. Make sure that the transmission is filled to the proper level, and check for fluid leaks.

3. Drain the ATF (see step 3 on page 14-239) through a strainer. Inspect the strainer for metal debris or excessive clutch material.

   *Does the strainer have metal debris or excessive clutch material?*

   **YES**—Replace the transmission, then go to step 8.

   **NO**—Replace the ATF (see step 5 on page 14-239), then go to step 4.

4. Clear the DTC with the HDS.

5. Test-drive the vehicle for several minutes in the D position through all five gears, then slow down to a stop.

6. Test-drive the vehicle again for several minutes in the D position through all five gears, then slow down to a stop.

7. Monitor the OBD status for P1743 in the DTCs/ Freeze Data in A/T Mode Menu for a pass/fail.

   *Does the result indicate FAILED?*

   **YES**—Repair shift valve E in the main valve body (see page 14-330), replace the main valve body, or replace the transmission, then go to step 8.

   **NO**—Intermittent failure, the system is OK at this time. If the HDS indicates NOT COMPLETED, return to step 5 and recheck.

8. Clear the DTC with the HDS.

9. Test-drive the vehicle for several minutes in the D position through all five gears, then slow down to a stop.

10. Test-drive the vehicle again for several minutes in the D position through all five gears, then slow down to a stop.

11. Monitor the OBD status for P1743 in the DTCs/ Freeze Data in A/T Mode Menu for a pass/fail.

    *Does the result indicate PASSED?*

    **YES**—Troubleshooting is complete.■

    **NO**—If the HDS indicates FAILED, return to step 8 and recheck. If the HDS indicates NOT COMPLETED, return to step 9 and recheck.

Protected by AR



## DTC Troubleshooting (cont'd)

### DTC P1744: Problem in Shift Control System; Shift Valve E Stuck ON

NOTE: Before you troubleshoot, record all freeze data and any on-board snapshot, and review General Troubleshooting Information (see page 14-4).

1. Warm up the engine to normal operating temperature (the radiator fan comes on).

2. Make sure that the transmission is filled to the proper level, and check for fluid leaks.

3. Drain the ATF (see step 3 on page 14-239) through a strainer. Inspect the strainer for metal debris or excessive clutch material.

   *Does the strainer have metal debris or excessive clutch material?*

   **YES**—Replace the transmission, then go to step 8.

   **NO**—Replace the ATF (see step 5 on page 14-239), then go to step 4.

4. Clear the DTC with the HDS.

5. Test-drive the vehicle for several minutes in the D position through all five gears, then slow down to a stop.

6. Test-drive the vehicle again for several minutes in the D position through all five gears, then slow down to a stop.

7. Monitor the OBD status for P1744 in the DTCs/ Freeze Data in A/T Mode Menu for a pass/fail.

   *Does the result indicate FAILED?*

   **YES**—Repair shift valve E in the main valve body (see page 14-330), replace the main valve body, or replace the transmission, then go to step 8.

   **NO**—Intermittent failure, the system is OK at this time. If the HDS indicates NOT COMPLETED, return to step 4 and recheck.

8. Clear the DTC with the HDS.

9. Test-drive the vehicle for several minutes in the D position through all five gears, then slow down to a stop.

10. Test-drive the vehicle again for several minutes in the D position through all five gears, then slow down to a stop.

11. Monitor the OBD status for P1744 in the DTCs/ Freeze Data in A/T Mode Menu for a pass/fail.

    *Does the result indicate PASSED?*

    **YES**—Troubleshooting is complete. ■

    **NO**—If the HDS indicates FAILED, return to step 8 and recheck. If the HDS indicates NOT COMPLETED, return to step 9 and recheck.



BACK

Protected by AR

## **DTC P1745:** Problem in Shift Control System; Servo Control Valve Stuck OFF or Servo Control Valve Stuck ON

NOTE: Before you troubleshoot, record all freeze data and any on-board snapshot, and review General Troubleshooting Information (see page 14-4).

1. Warm up the engine to normal operating temperature (the radiator fan comes on).

2. Make sure that the transmission is filled to the proper level, and check for fluid leaks.

3. Drain the ATF (see step 3 on page 14-239) through a strainer. Inspect the strainer for metal debris or excessive clutch material.

   *Does the strainer have metal debris or excessive clutch material?*

   **YES**—Replace the transmission, then go to step 8.

   **NO**—Replace the ATF (see step 5 on page 14-239), then go to step 4.

4. Clear the DTC with the HDS.

5. Test-drive the vehicle for several minutes in the D position through all five gears, then slow down to a stop.

6. Test-drive the vehicle again for several minutes in the D position through all five gears, then slow down to a stop.

7. Monitor the OBD status for P1745 in the DTCs/ Freeze Data in A/T Mode Menu for a pass/fail.

   *Does the result indicate FAILED?*

   **YES**—Repair the servo control valve in the main valve body (see page 14-330), servo valve in the regulator valve body (see page 14-333), or replace the main valve body, the regulator valve body, or replace the transmission, then go to step 8.

   **NO**—Intermittent failure, the system is OK at this time. If the HDS indicates NOT COMPLETED, return to step 5 and recheck.

8. Clear the DTC with the HDS.

9. Test-drive the vehicle for several minutes in the D position through all five gears, then slow down to a stop.

10. Test-drive the vehicle again for several minutes in the D position through all five gears, then slow down to a stop.

11. Monitor the OBD status for P1745 in the DTCs/ Freeze Data in A/T Mode Menu for a pass/fail.

    *Does the result indicate PASSED?*

    **YES**—Troubleshooting is complete. ■

    **NO**—If the HDS indicates FAILED, return to step 8 and recheck. If the HDS indicates NOT COMPLETED, return to step 9 and recheck.

Protected by AR



## DTC Troubleshooting (cont'd)

### DTC P1780: Problem in Shift Control System

NOTE: Before you troubleshoot, record all freeze data and any on-board snapshot, and review General Troubleshooting Information (see page 14-4).

1. Clear the DTC with the HDS.

2. Test-drive the vehicle for several minutes in the D position through all five gears, then slow down to a stop.

3. Test-drive the vehicle again for several minutes in the D position through all five gears, then slow down to a stop.

4. Check for other DTCs indicated simultaneous with the code P1780.

   NOTE: DTC P1780 means there is one or more A/T DTCs about the shift control system.

   *Are there other DTCs?*

   **YES**—Troubleshoot a problem as indicated by the DTC.■

   **NO**—Go to step 5.

5. Update the A/T software in the PCM if it does not have the latest software (see page 14-8), or substitute a known-good PCM (see page 14-10).

6. Test-drive the vehicle for several minutes in the D position through all five gears, then slow down to a stop.

7. Test-drive the vehicle again for several minutes in the D position through all five gears, then slow down to a stop.

8. Check for DTC(s) in the DTCs/Freeze Data in A/T Mode Menu with the HDS.

   *Is DTC P1780 indicated?*

   **YES**—If the PCM was updated, substitute a known-good PCM (see page 14-10), then recheck. If the PCM was substituted, go to step 1.

   **NO**—Go to step 9.

9. Monitor the OBD status for P1780 in the DTCs/Freeze Data in A/T Mode Menu for a pass/fail.

   *Does the result indicate PASSED?*

   **YES**—If the PCM was updated, troubleshooting is complete. If the PCM was substituted, replace the original PCM (see page 11-252). If any other DTCs were indicated on step 8, go to the indicated DTC's troubleshooting.■

   **NO**—If the HDS indicates FAILED, check for poor connections and loose terminals at the PCM. If the PCM was updated, substitute a known-good PCM (see page 14-10), then recheck. If the PCM was substituted, go to step 1. If the HDS indicates NOT COMPLETED, return to step 6 and recheck.



BACK

Protected by AR

## **DTC P2122:** Accelerator Pedal Position (APP) Sensor A (Throttle Position Sensor D) Circuit Low Voltage Input

NOTE: Before you troubleshoot, record all freeze data and any on-board snapshot, and review General Troubleshooting Information (see page 14-4).

1. Clear the DTC with the HDS.

2. Turn the ignition switch ON (II).

3. Check whether DTC P2122 is indicated in the DTCs/ Freeze Data in PGM-FI Mode Menu with the HDS.

   *Is DTC P2122 indicated in the PGM-FI system?*

   **YES**—Troubleshoot for DTC P2122 in the PGM-FI System (see page 11-278).■

   **NO**—Go to step 4.

4. Check whether DTC P2122 is indicated in the DTCs/ Freeze Data in A/T Mode Menu with the HDS.

   *Is DTC P2122 indicated?*

   **YES**—Go to step 5.

   **NO**—Intermittent failure, the system is OK at this time.■

5. Update the A/T software in the PCM if it does not have the latest software (see page 14-8), or substitute a known-good PCM (see page 14-10).

6. Turn the ignition switch ON (II).

7. Check for DTC(s) in the DTCs/Freeze Data in A/T Mode Menu with the HDS.

   *Is DTC P2122 indicated?*

   **YES**—If the PCM was updated, substitute a known-good PCM (see page 14-10), then recheck. If the PCM was substituted, go to step 1.

   **NO**—Go to step 8.

8. Monitor the OBD status for P2122 in the DTCs/ Freeze Data in A/T Mode Menu for a pass/fail.

   *Does the result indicate PASSED?*

   **YES**—If the PCM was updated, troubleshooting is complete. If the PCM was substituted, replace the original PCM (see page 11-252). If any other DTCs were indicated on step 7, go to the indicated DTC's troubleshooting.■

   **NO**—If the HDS indicates FAILED, check for poor connections and loose terminals at accelerator pedal position sensor A and the PCM. If the PCM was updated, substitute a known-good PCM (see page 14-10), then recheck. If the PCM was substituted, go to step 1. If the HDS indicates NOT COMPLETED, return to step 6 and recheck.

Protected by AR



## DTC Troubleshooting (cont'd)

### **DTC P2123:** Accelerator Pedal Position (APP) Sensor A (Throttle Position Sensor D) Circuit High Voltage Input

NOTE: Before you troubleshoot, record all freeze data and any on-board snapshot, and review General Troubleshooting Information (see page 14-4).

1. Clear the DTC with the HDS.

2. Turn the ignition switch ON (II).

3. Check whether DTC P2123 is indicated in the DTCs/ Freeze Data in PGM-FI Mode Menu with the HDS.

   *Is DTC P2123 indicated in the PGM-FI system?*

   **YES**—Troubleshoot for DTC P2123 in the PGM-FI System (see page 11-281).■

   **NO**—Go to step 4.

4. Check whether DTC P2123 is indicated in the DTCs/ Freeze Data in A/T Mode Menu with the HDS.

   *Is DTC P2123 indicated?*

   **YES**—Go to step 5.

   **NO**—Intermittent failure, the system is OK at this time.■

5. Update the A/T software in the PCM if it does not have the latest software (see page 14-8), or substitute a known-good PCM (see page 14-10).

6. Turn the ignition switch ON (II).

7. Check for DTC(s) in the DTCs/Freeze Data in A/T Mode Menu with the HDS.

   *Is DTC P2123 indicated?*

   **YES**—If the PCM was updated, substitute a known-good PCM (see page 14-10), then recheck. If the PCM was substituted, go to step 1.

   **NO**—Go to step 8.

8. Monitor the OBD status for P2123 in the DTCs/ Freeze Data in A/T Mode Menu for a pass/fail.

   *Does the result indicate PASSED?*

   **YES**—If the PCM was updated, troubleshooting is complete. If the PCM was substituted, replace the original PCM (see page 11-252). If any other DTCs were indicated on step 7, go to the indicated DTC's troubleshooting.■

   **NO**—If the HDS indicates FAILED, check for poor connections and loose terminals at accelerator pedal position sensor A and the PCM. If the PCM was updated, substitute a known-good PCM (see page 14-10), then recheck. If the PCM was substituted, go to step 1. If the HDS indicates NOT COMPLETED, return to step 6 and recheck.



BACK

Protected by AR

## **DTC U0028:** F-CAN Communication Circuit Error (F-CAN Bus OFF)

NOTE: Before you troubleshoot, record all freeze data and any on-board snapshot, and review General Troubleshooting Information (see page 14-4).

1. Clear the DTC with the HDS.

2. Turn the ignition switch ON (II).

3. Check whether DTC U0028 is indicated in the DTCs/ Freeze Data in PGM-FI Mode Menu with the HDS.

   *Is DTC U0028 indicated in the PGM-FI system?*

   **YES**—Troubleshoot for DTC U0028 in the PGM-FI System (see page 11-205). ■

   **NO**—Go to step 4.

4. Check whether DTC U0028 is indicated in the DTCs/ Freeze Data in A/T Mode Menu with the HDS.

   *Is DTC U0028 indicated?*

   **YES**—Go to step 5.

   **NO**—Intermittent failure, the system is OK at this time. ■

5. Update the A/T software in the PCM if it does not have the latest software (see page 14-8), or substitute a known-good PCM (see page 14-10).

6. Turn the ignition switch ON (II).

7. Check for DTC(s) in the DTCs/Freeze Data in A/T Mode Menu with the HDS.

   *Is DTC U0028 indicated?*

   **YES**—If the PCM was updated, substitute a known-good PCM (see page 14-10), then recheck. If the PCM was substituted, go to step 1.

   **NO**—Go to step 8.

8. Monitor the OBD status for U0028 in the DTCs/ Freeze Data in A/T Mode Menu for a pass/fail.

   *Does the result indicate PASSED?*

   **YES**—If the PCM was updated, troubleshooting is complete. If the PCM was substituted, replace the original PCM (see page 11-252). If any other DTCs were indicated on step 7, go to the indicated DTC's troubleshooting. ■

   **NO**—If the HDS indicates FAILED, check for poor connections and loose terminals at the PCM and the connectors on the F-CAN circuit. If the PCM was updated, substitute a known-good PCM (see page 14-10), then recheck. If the PCM was substituted, go to step 1. If the HDS indicates NOT COMPLETED, return to step 6 and recheck.

Protected by AR



## DTC Troubleshooting (cont'd)

### DTC U0122: Lost Communication with VSA Control Unit

NOTE: Before you troubleshoot, record all freeze data and any on-board snapshot, and review General Troubleshooting Information (see page 14-4).

1. Clear the DTC with the HDS.
2. Turn the ignition switch ON (II).
3. Check that DTC U0122 recurs.

   *Is DTC U0122 indicated?*

   **YES**—Go to step 4.

   **NO**—Intermittent failure, the system is OK at this time.■

4. Check whether any DTC is indicated in the DTCs/ Freeze Data in VSA Mode Menu with the HDS.

   *Is any DTC indicated in the VSA?*

   **YES**—Troubleshoot for the indicated DTC in the VSA system (see page 19-83).■

   **NO**—Go to step 5.

5. Turn the ignition switch OFF.
6. Jump the SCS line with the HDS.
7. Disconnect PCM connector A (44P).
8. Disconnect the VSA modulator-control unit connector.
9. Check for continuity between PCM connector terminal A36 and VSA modulator-control unit connector terminal No. 39, and between A37 and terminal No. 38.

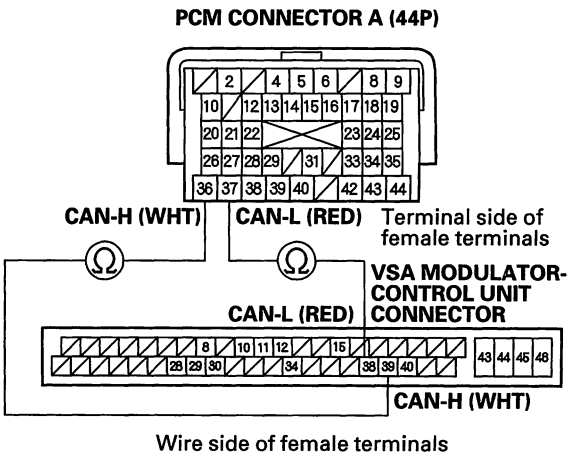


*Is there continuity?*

**YES**—Go to step 10.

**NO**—Go to step 14.



BACK

Protected by AR

10. Update the A/T software in the PCM if it does not have the latest software (see page 14-8), or substitute a known-good PCM (see page 14-10).

11. Turn the ignition switch ON (II).

12. Check for DTC(s) in the DTCs/Freeze Data in A/T Mode Menu with the HDS.

    *Is DTC U0122 indicated?*

    **YES**—If the PCM was updated, substitute a known-good PCM (see page 14-10), then recheck. If the PCM was substituted, go to step 1.

    **NO**—Go to step 13.

13. Monitor the OBD status for U0122 in the DTCs/Freeze Data in A/T Mode Menu for a pass/fail.

    *Does the result indicate PASSED?*

    **YES**—If the PCM was updated, troubleshooting is complete. If the PCM was substituted, replace the original PCM (see page 11-252). If any other DTCs were indicated on step 12, go to the indicated DTC's troubleshooting.■

    **NO**—If the HDS indicates FAILED, check for poor connections and loose terminals at the VSA modulator-control unit and the PCM. If the PCM was updated, substitute a known-good PCM (see page 14-10), then recheck. If the PCM was substituted, go to step 1. If the HDS indicates NOT COMPLETED, keep idling until a result comes on.

14. Check the communication line between the VSA modulator-control unit and the gauge control module with the HDS.

    *Is there malfunction in the F-CAN line between the VSA modulator-control unit and the gauge control module?*

    **YES**—Repair open in the wires between the VSA modulator-control unit connector and the CAN communication lines.■

    **NO**—Substitute a known-good VSA modulator-control unit (see page 19-137), then recheck. If the symptom/indication goes away with a known-good VSA modulator-control unit, replace the original VSA modulator-control unit.■

Protected by AR



## DTC Troubleshooting (cont'd)

### DTC U0155: Lost Communication with Gauge Control Module

NOTE: Before you troubleshoot, record all freeze data and any on-board snapshot, and review General Troubleshooting Information (see page 14-4).

1. Clear the DTC with the HDS.

2. Turn the ignition switch ON (II).

3. Check whether DTC U0155 is indicated in the DTCs/ Freeze Data in PGM-FI Mode Menu with the HDS.

   *Is DTC U0155 indicated in the PGM-FI system?*

   **YES**—Troubleshoot for DTC U0155 in the PGM-FI System (see page 11-210).■

   **NO**—Go to step 4.

4. Check whether DTC U0155 is indicated in the DTCs/ Freeze Data in A/T Mode Menu with the HDS.

   *Is DTC U0155 indicated?*

   **YES**—Go to step 5.

   **NO**—Intermittent failure, the system is OK at this time.■

5. Update the A/T software in the PCM if it does not have the latest software (see page 14-8), or substitute a known-good PCM (see page 14-10).

6. Turn the ignition switch ON (II).

7. Check for DTC(s) in the DTCs/Freeze Data in A/T Mode Menu with the HDS.

   *Is DTC U0155 indicated?*

   **YES**—If the PCM was updated, substitute a known-good PCM (see page 14-10), then recheck. If the PCM was substituted, go to step 1.

   **NO**—Go to step 8.

8. Monitor the OBD status for U0155 in the DTCs/ Freeze Data in A/T Mode Menu for a pass/fail.

   *Does the result indicate PASSED?*

   **YES**—If the PCM was updated, troubleshooting is complete. If the PCM was substituted, replace the original PCM (see page 11-252). If any other DTCs were indicated on step 7, go to the indicated DTC's troubleshooting.■

   **NO**—If the HDS indicates FAILED, check for poor connections and loose terminals at the gauge control module and the PCM. If the PCM was updated, substitute a known-good PCM (see page 14-10), then recheck. If the PCM was substituted, go to step 1. If the HDS indicates NOT COMPLETED, keep idling until a result comes on.



BACK

Protected by AR

## Road Test

1. Warm up the engine to normal operating temperature (the radiator fan comes on).

2. Apply the parking brake, and block both rear wheels. Start the engine, then shift to the D position while pressing the brake pedal. Press the accelerator pedal, and release it suddenly. The engine should not stall.

3. Repeat step 2 in all shift lever positions.

4. Connect the HDS to the DLC (A), and go to the A/T data list. If the HDS does not communicate with the PCM, troubleshoot the DLC circuit (see page 11-229).

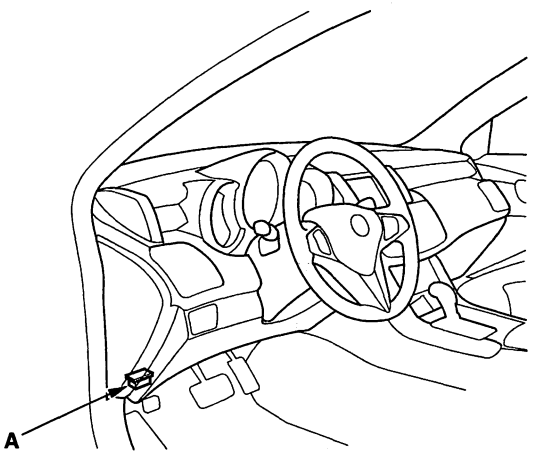


5. Prepare the HDS to take a HIGH SPEED SNAPSHOT (refer to the HDS user's guide for more details if needed):

   - Select High Speed icon.
   - Select these parameters:
     - VSS veh speed
     - Output Shaft (Countershaft) Speed
     - Input Shaft (Mainshaft) Speed (rpm)
     - RPM engine speed
     - Relative TP Sensor
     - APP Sensor A
     - ATF Temp sensor
     - Battery voltage
     - Shift control
     - Brake Switch
   - Set the Trigger Type to Parameter.
   - Adjust the Parameter setting to APP Sensor A above 0.75 V.
   - Set the recording time to 60 seconds.
   - Set the Trigger point to —30 seconds.

6. Find a suitable level road. When you are ready to do the test, press OK on the HDS.

7. Monitor the HDS and accelerate quickly until the APP Sensor A reads 0.75 V. Maintain a steady throttle until the transmission shifts to 5th gear, then slow the vehicle and come to a stop.

8. Save the snapshot if the entire event was recorded or increase the recording time setting as necessary and repeat step 7.

9. Adjust the Parameter setting to 2.25 V. Test-drive the vehicle again. While monitoring the HDS, accelerate quickly until the APP Sensor A reads 2.25 V. Maintain a steady throttle until the transmission shifts to 5th gear (or reasonable speed), then slow the vehicle and come to a stop.

10. Save the snapshot if the entire event was recorded or increase the recording time setting as necessary and repeat step 9.

11. Accelerate quickly until the accelerator pedal is to the floor. Maintain a steady pedal until the transmission shifts to 3rd gear, then slow to a stop, and save the snapshot.

(cont'd)

Protected by AR



## Road Test (cont'd)

12. Review each snapshot individually, and compare the Shift Command, the APP Sensor A voltage, and the Vehicle Speed to the table below.

**Upshift: D Position**

| | |
|---|---|
| **Accelerator pedal position sensor voltage: 0.75 V** | |
| 1st→2nd | 8—10 mph (13—16 km/h) |
| 2nd→3rd | 14—16 mph (23—26 km/h) |
| 3rd→4th | 22—26 mph (35—42 km/h) |
| 4th→5th | 39—43 mph (63—69 km/h) |
| Lock-up ON | 48—51 mph (77—82 km/h) |
| **Accelerator pedal position sensor voltage: 2.25 V** | |
| 1st→2nd | 25—28 mph (40—45 km/h) |
| 2nd→3rd | 48—52 mph (77—84 km/h) |
| 3rd→4th | 68—72 mph (109—116 km/h) |
| 4th→5th | 90—94 mph (145—151 km/h) |
| Lock-up ON | 76—80 mph (122—129 km/h) |
| **Fully-opened throttle Accelerator pedal position sensor voltage: 4.5 V** | |
| 1st→2nd | 34—38 mph (55—61 km/h) |
| 2nd→3rd | 63—67 mph (101—108 km/h) |
| 3rd→4th | 101—106 mph (163—171 km/h) |

**Downshift: D Position (reference)**

| | |
|---|---|
| **Accelerator pedal position sensor voltage: 0.75 V** | |
| Lock-up OFF | 45—48 mph (72—77 km/h) |
| 5th→4th | 33—36 mph (53—58 km/h) |
| 4th→3rd | 15—18 mph (24—29 km/h) |
| 2nd→1st | 5—8 mph (8—13 km/h) |
| **Accelerator pedal position sensor voltage: 2.25 V** | |
| Lock-up OFF | 72—77 mph (116—124 km/h) |
| 5th→4th | 68—71 mph (109—114 km/h) |
| 4th→3rd | 45—48 mph (72—77 km/h) |
| 3rd→2nd | 22—25 mph (35—40 km/h) |
| 2nd→1st | 5—8 mph (8—13 km/h) |
| **Fully-opened throttle Accelerator pedal position sensor voltage: 4.5 V** | |
| 4th→3rd | 81—86 mph (130—138 km/h) |
| 3rd→2nd | 51—55 mph (82—86 km/h) |
| 2nd→1st | 27—30 mph (43—48 km/h) |

13. Drive the vehicle in 4th or 5th gear in the sequential sportshift mode in the S position, then downshift to 2nd gear. The vehicle should immediately begin to slow down from engine braking.

14. Shift to the R position, accelerate from a stop at full throttle, and check for abnormal noise and clutch slippage.

15. Park the vehicle on a slope (about 16 degrees), apply the brake, and shift into the P position. Release the brake; the vehicle should not move.

    NOTE: Always use the brake to hold the vehicle, when stopped on an incline in gear. Depending on the grade of the incline, the vehicle could roll backwards if the brake is released.



BACK

Protected by AR

## Stall Speed Test

1. Make sure the transmission fluid is filled to the proper level (see page 14-238).

2. Apply the parking brake, and block all four wheels.

3. Connect the HDS to the DLC (A), and go to the A/T data list. If the HDS does not communicate with the PCM, troubleshoot the DLC circuit (see page 11-229).

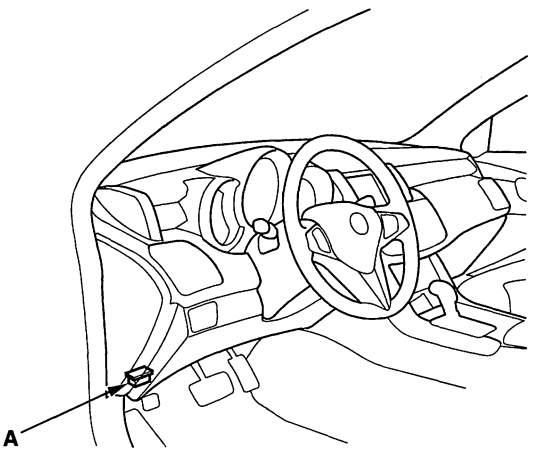


4. Make sure the A/C switch OFF.

5. After the engine has warmed up to normal operating temperature (the radiator fan comes on), shift to the D position.

6. Firmly press the brake pedal and accelerator pedal for 6 to 8 seconds, and note engine speed. Do not move the shift lever while raising engine speed.

7. Allow 2 minutes for cooling, then repeat the test in the R position.

   NOTE:
   - Do not test stall speed for more than 10 seconds at a time.
   - Stall speed tests should be used for diagnostic purposes only.
   - Stall speed should be the same in the D and R positions.
   - Do not test stall speed with the A/T pressure gauges installed.

   **Stall Speed rpm**
   **Specification: 1,950 rpm**
   **Service Limit: 1,800—2,100 rpm**

8. If the measurements are out of the service limit, the possible problems and probable causes are listed in the table.

| Problem | Probable causes |
|---|---|
| Stall speed rpm high in the D and R positions | • ATF pump output low<br>• Regulator valve stuck<br>• Slipping clutch |
| Stall speed rpm high in the R position | Slippage of 5th clutch |
| Stall speed rpm low in the D and R positions | • Engine output low<br>• Engine throttle valve closed<br>• Torque converter one-way clutch slipping |

BACK

Protected by AR



## Pressure Test

**Special Tools Required**
- A/T clutch pressure gauge set 07406-0020400 or 07406-0020401
- A/T pressure hose, 2,210 mm 07MAJ-PY4011A
- A/T pressure hose adapter 07MAJ-PY40120

1. Make sure the transmission fluid is filled to the proper level (see page 14-238).
2. Raise the vehicle, and make sure it is securely supported.
3. Allow all four wheels to rotate freely.
4. Remove the splash shield.
5. Connect the HDS to the DLC (A), and go to the A/T data list. If the HDS does not communicate with the PCM, troubleshoot the DLC circuit (see page 11-229).

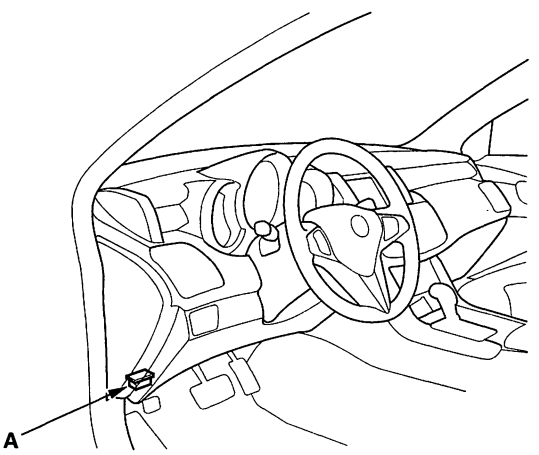


6. Connect the oil pressure gauge to the line pressure inspection port (A). Do not allow dust or other foreign particles to enter the hole while connecting the gauge.

**A/T OIL PRESSURE GAUGE SET W/PANEL 07406-0020400 or 07406-0020401**

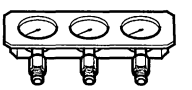

**A/T PRESSURE HOSE, 2,210 mm 07MAJ-PY4011A (4 required)**

**A/T PRESSURE HOSE ADAPTER 07MAJ-PY40120 (4 required)**

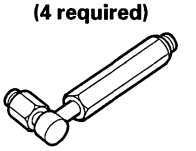

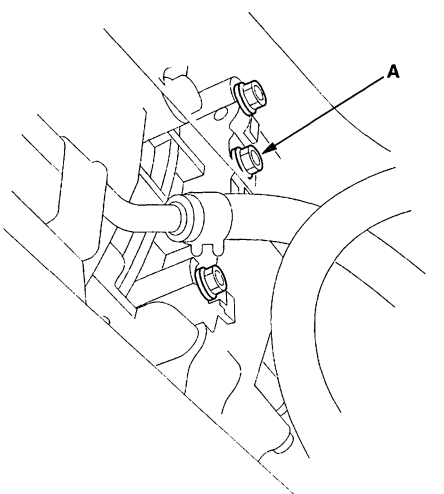


7. Start the engine, and warm it up to normal operating temperature (the radiator fan comes on).
8. Measure the line pressure at the line pressure inspection port (A) in the P or N position while holding the engine speed at 2,000 rpm.

   NOTE: Higher pressure may be indicated if measurements are made in the shift lever position other than P or N.

| Pressure | Fluid Pressure | |
|---|---|---|
| | Standard | Service Limit |
| Line (A) | 950—1,010 kPa (9.7—10.3 kgf/cm², 140—146 psi) | 900 kPa (9.2 kgf/cm², 130 psi) |



BACK

Protected by AR

9. Turn the engine off, then disconnect the oil pressure gauge from the line pressure inspection port.

10. Install the sealing bolt to the line pressure inspection port with a new sealing washer, and tighten the bolts to 18 N·m (1.8 kgf·m, 13 lbf·ft). Do not reuse the old sealing washer.

11. Connect the oil pressure gauge to the 1st clutch pressure inspection port (B) and the 1st-hold clutch pressure inspection port (C).

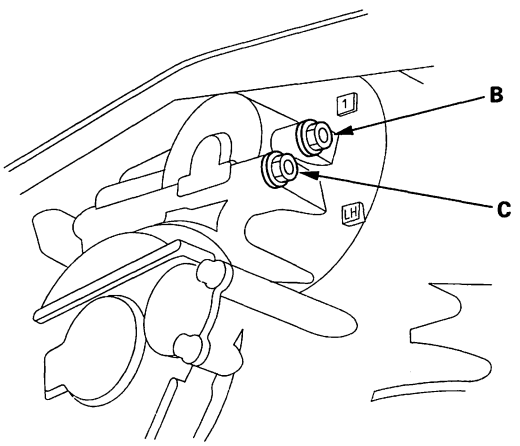


12. Remove the air cleaner housing and the air intake duct, and connect the oil pressure gauge to the 2nd clutch pressure inspection port (D). Then temporarily install the air cleaner housing and the air intake duct.

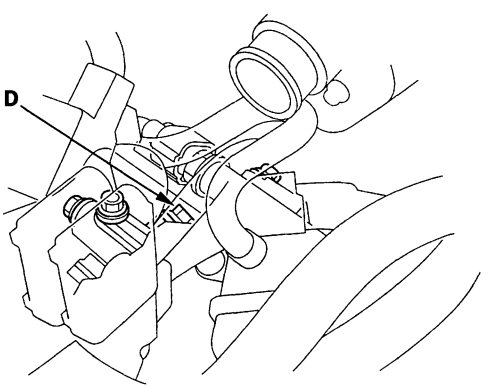


13. Start the engine, and shift into the S position.

14. Shift into 1st gear by pulling the paddle shifter + (upshift switch), and measure the 1st clutch pressure at the 1st clutch pressure inspection port (B) and 1st-hold clutch pressure at the 1st-hold clutch pressure inspection port (C) while holding the engine speed at 2,000 rpm.

15. Upshift to 2nd gear by pulling the paddle shifter + (upshift switch), and measure the 2nd clutch pressure at the 2nd clutch pressure inspection port (D) while holding the engine speed at 2,000 rpm.

| Pressure | Fluid Pressure | |
|---|---|---|
| | Standard | Service Limit |
| 1st clutch (B)<br>2nd clutch (D) | 940—1,020 kPa (9.6—10.4 kgf/cm², 140—148 psi) | 890 kPa (9.1 kgf/cm², 130 psi) |
| 1st-hold clutch (C) | 760—830 kPa (7.7—8.5 kgf/cm², 110—120 psi) | 710 kPa (7.2 kgf/cm², 100 psi) |

16. Turn the engine off, remove the air cleaner housing and air intake duct, then disconnect the oil pressure gauges from the 1st clutch pressure, 1st-hold clutch pressure, and 2nd clutch pressure inspection ports.

17. Install the sealing bolts in the 1st clutch pressure, 1st-clutch hold clutch pressure, and 2nd clutch pressure inspection ports with new sealing washers, and tighten the bolts to 18 N·m (1.8 kgf·m, 13 lbf·ft). Do not reuse the old sealing washers.

18. Install the air cleaner housing and the air intake duct.

(cont'd)

Protected by AR



## Pressure Test (cont'd)

19. Connect the oil pressure gauge to the 3rd clutch pressure inspection port (E) and the 5th clutch pressure inspection port (G).

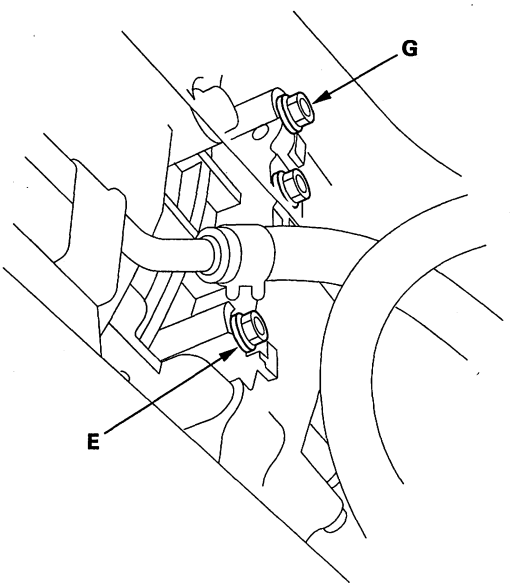


20. Connect the oil pressure gauge to the 4th clutch pressure inspection port (F).

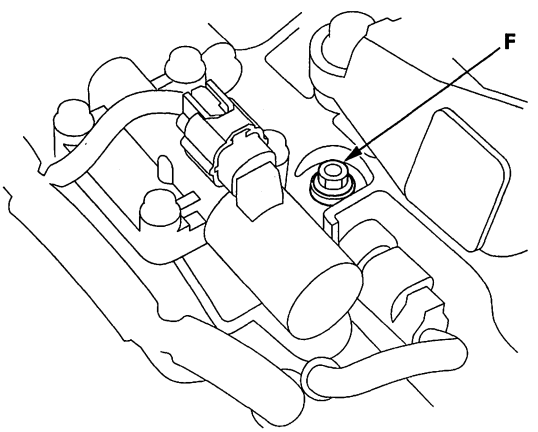


21. Start the engine, and shift to the S position.

22. Upshift to 3rd gear by pulling the paddle shifter + (upshift switch), and measure the 3rd clutch pressure at the 3rd clutch pressure inspection port (D) while holding the engine speed at 2,000 rpm.

23. Upshift to 4th gear, and measure the 4th clutch pressure inspection port (E) while holding the engine speed at 2,000 rpm.

24. Upshift to 5th gear, and measure the 5th clutch pressure at the 5th clutch pressure inspection port (F) while holding the engine speed at 2,000 rpm.

| Pressure | Fluid Pressure | |
|---|---|---|
| | Standard | Service Limit |
| 3rd clutch (E)<br>4th clutch (F)<br>5th clutch (G) | 940—1,020 kPa (9.6—10.4 kgf/cm², 140—148 psi) | 890 kPa (9.1 kgf/cm², 130 psi) |

25. Bring the engine back to an idle, then apply the brake pedal to stop the wheels from rotating.

26. Shift to the R position, then release the brake pedal. Raise the engine speed to 2,000 rpm, and measure 5th clutch pressure at the 5th clutch pressure inspection port (G).

| Pressure | Fluid Pressure | |
|---|---|---|
| | Standard | Service Limit |
| 5th clutch (G) in R | 940—1,020 kPa (9.6—10.4 kgf/cm², 140—148 psi) | 890 kPa (9.1 kgf/cm², 130 psi) |

27. Turn the engine off, then disconnect the oil pressure gauges from the 3rd, 4th, and 5th clutch pressure inspection ports.

28. Install the sealing bolts in the 3rd, 4th, and 5th clutch pressure inspection holes with new sealing washers, and tighten the bolts to 18 N·m (1.8 kgf·m, 13 lbf·ft). Do not reuse the old sealing washers.



BACK

Protected by AR

29. If the measurements are out of the service limit, the possible problems and probable causes are listed in the table.

| Problem | Probable causes |
|---|---|
| No or low line pressure | • Torque converter<br>• ATF pump<br>• Regulator valve<br>• Torque converter check valve<br>• Low fluid level<br>• Clogged ATF strainer |
| No or low 1st clutch pressure | • 1st clutch<br>• O-rings |
| No or low 2nd clutch pressure | • 2nd clutch<br>• O-rings |
| No or low 3rd clutch pressure | • 3rd clutch<br>• O-rings |
| No or low 4th clutch pressure | • 4th clutch<br>• O-rings |
| No or low 5th clutch pressure | • 5th clutch<br>• O-rings |
| No or low 5th clutch pressure in the R position | • Servo valve<br>• 5th clutch<br>• O-rings |
| No or low 1st-hold clutch pressure | • 1st-hold clutch<br>• O-rings |

30. Install the splash shield.

Protected by AR



## Shift Solenoid Valve Test, Replacement, and Shift Solenoid Wire Harness Replacement

1. Connect the HDS to the DLC (A).

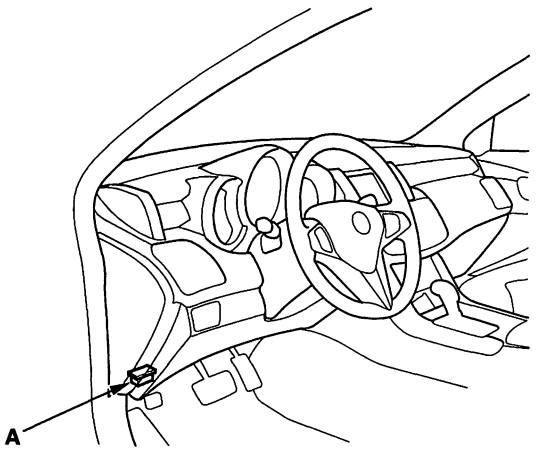


2. Choose Shift Solenoid A, B, C, and D in the Miscellaneous Test Menu on the HDS.

   NOTE: If the HDS does not communicate with the PCM, troubleshoot the DLC circuit (see page 11-229).

3. Check that shift solenoid valves A, B, C, and D operate with the HDS. A clicking sound should be heard.

   - If a clicking sound is heard, the valves are OK. The test is complete, disconnect the HDS.
   - If no clicking sound is heard, go to step 4, and test the solenoid valves.

4. Make sure you have the audio system and navigation system (if equipped) anti-theft codes, and write down the audio presets.

5. Disconnect the negative terminal from the battery, then disconnect the positive terminal.

6. Remove the battery hold-down bracket, and remove the battery cover, battery, and battery tray.

7. Remove the battery base.

8. Remove the intercooler cover, air cleaner housing, and air intake duct.

9. Remove the nuts securing the shift cable bracket (A).

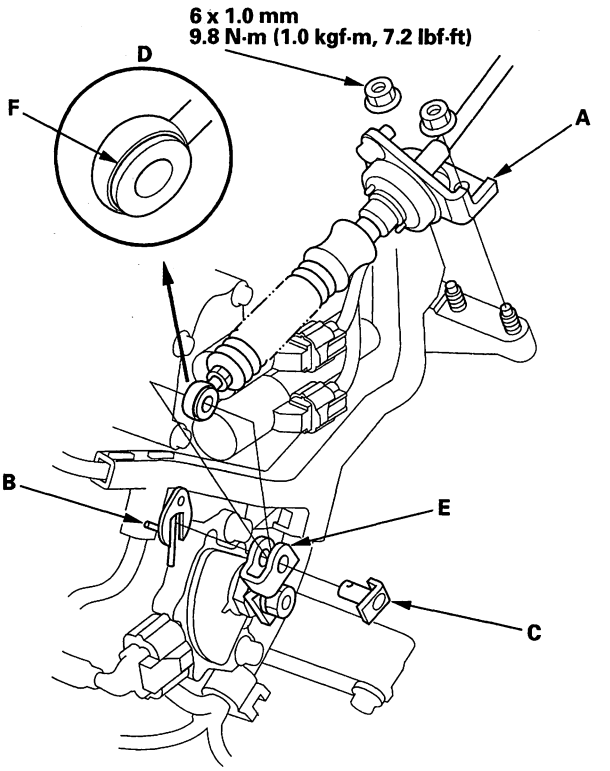


10. Remove the spring clip/washer (B) and control pin (C), then separate the shift cable end (D) from the control lever (E).

11. Check the synthetic resin bushing (F) in the shift cable end for a proper fit and wear. If the bushing is loose or worn, replace the shift cable (see page 14-282).



BACK

Protected by AR

12. Disconnect the input shaft (mainshaft) speed sensor connector (A), output shaft (countershaft) speed sensor connector (B), 3rd clutch transmission fluid pressure switch connector (C), and ATF temperature sensor connector (D).

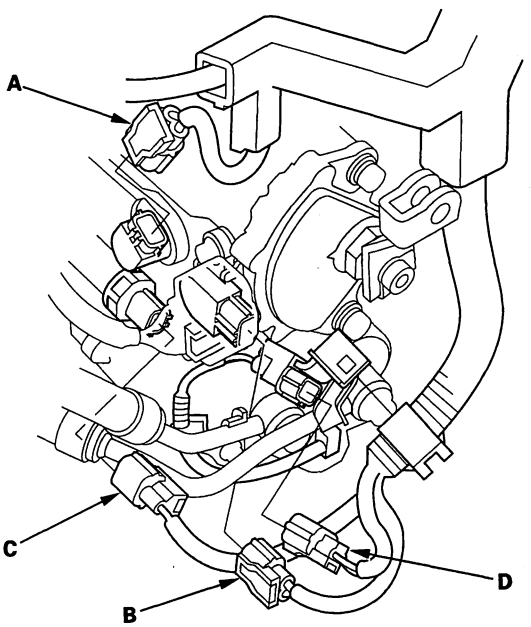


13. Disconnect the A/T clutch pressure control solenoid valve A connector (A), solenoid valve B connector (B), shift solenoid harness connector (C).

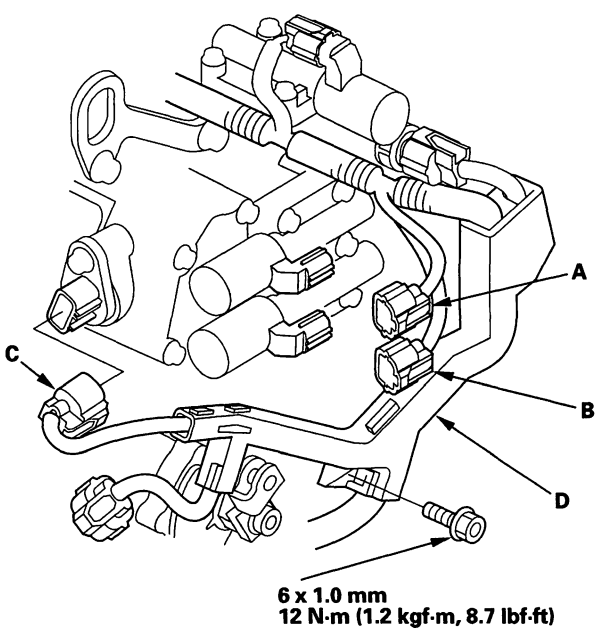


14. Remove the bolt securing the harness cover (D).

15. Remove the A/T clutch pressure control solenoid valve A and B, ATF pipes (C), and gasket (D).

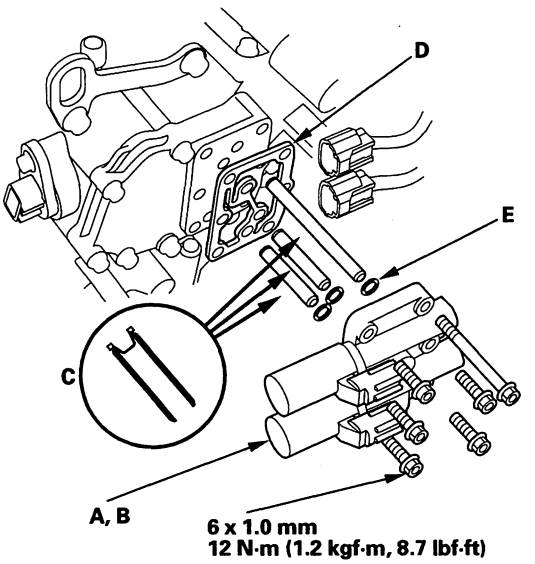


16. Replace the gasket and O-rings (E) with new ones when installing the A/T clutch pressure control solenoid valve A and B.

17. Remove the solenoid valve cover (A), dowel pins (B), and gasket (C).

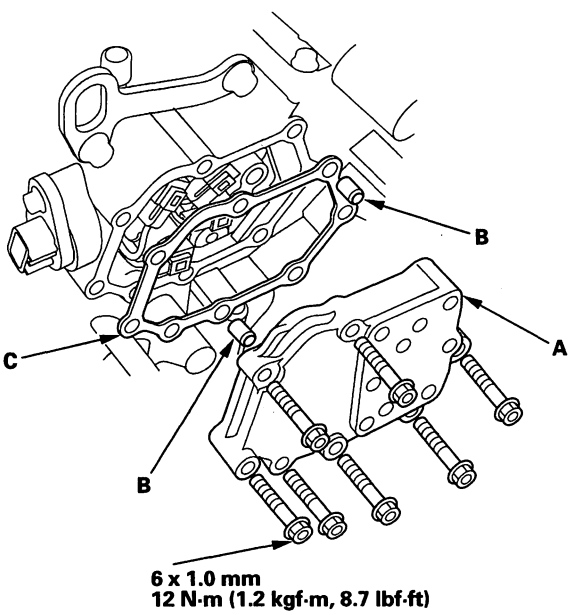


18. Replace the gasket with new one when installing the solenoid cover.

(cont'd)

Protected by AR



## Shift Solenoid Valve Test, Replacement, and Shift Solenoid Wire Harness Replacement (cont'd)

19. Disconnect the connectors from shift solenoid valve A, shift solenoid valve B, shift solenoid valve C, and shift solenoid valve D.

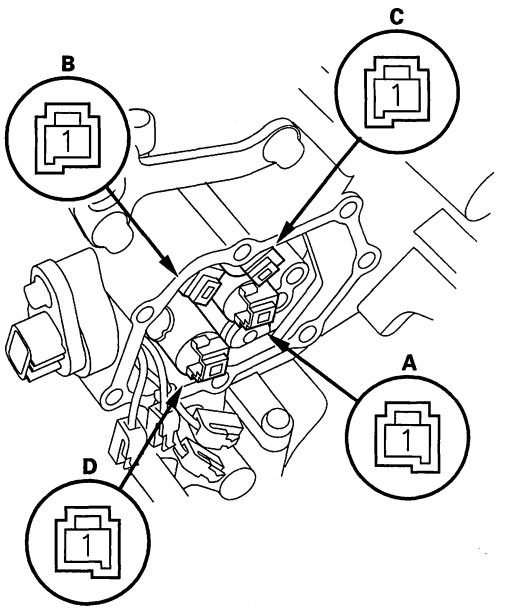


20. Measure the resistance of each shift solenoid valve between the connector terminal and body ground.

    **Standard: 12—25 Ω**

    - If the resistance is out of standard, go to step 23 and replace shift solenoid valve.
    - If the resistance is within the standard, go to step 21 and check solenoid valve for a clicking sound.

21. Connect a jumper wire from the positive battery terminal to each solenoid valve terminal individually.

    - If a clicking sound is heard, go to step 22 and replace the shift solenoid harness.
    - If no clicking sound is heard, go to step 23 and replace shift solenoid valve.

22. Remove the shift solenoid wire harness connector (A), and replace it. Install a new O-ring (B) on the shift solenoid harness connector, and install the connector in the transmission housing, then go to step 29.

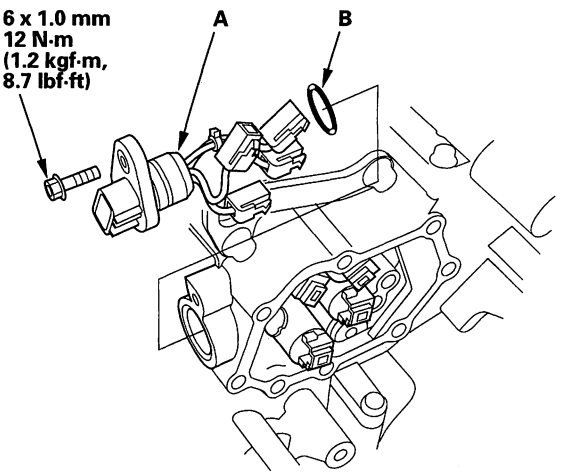


23. Remove the mounting bolts, then remove the solenoid valves.

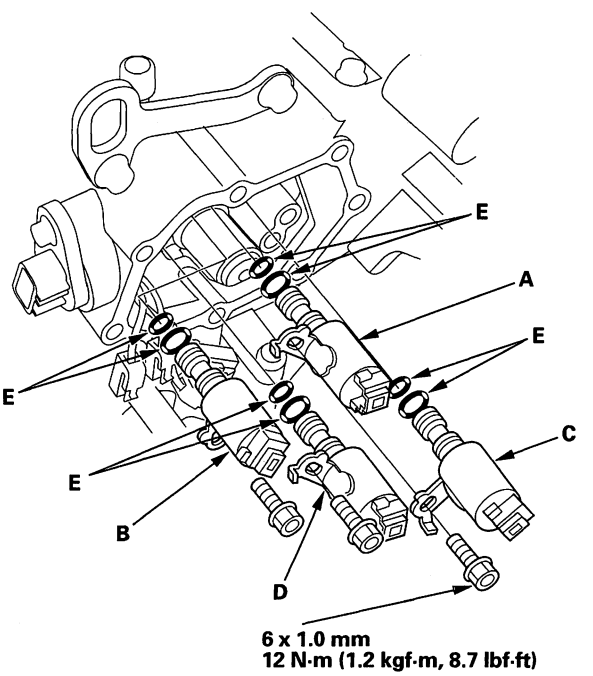




BACK

Protected by AR

24. Install new O-rings (two O-rings per solenoid valve) (E) on the reused solenoid valves.

    NOTE: A new solenoid valve comes with new O-rings. If you install a new solenoid valve, use the O-rings provided on it.

25. Install shift solenoid valve D (black connector) by holding the shift solenoid valve body; make sure the mounting bracket contacts the accumulator body.

    NOTE: Do not hold the solenoid valve by the connector when installing the solenoid valve. Be sure to hold the solenoid valve body.

26. Install shift solenoid valve A (black connector) by holding the shift solenoid valve body; make sure the mounting bracket contacts the accumulator body.

27. Install shift solenoid valve C (brown connector) by holding the shift solenoid valve body; make sure the mounting bracket contacts the bracket of shift solenoid valve A.

    NOTE: Do not install shift solenoid valve C before installing shift solenoid valve A. If shift solenoid valve C is installed before installing shift solenoid valve A, it may damage the hydraulic control system.

28. Install shift solenoid valve B (brown connector) by holding the shift solenoid valve body; make sure the mounting bracket contacts the accumulator body.

29. Connect the YEL harness terminal to shift solenoid valve A, the GRN harness terminal to shift solenoid valve C, the RED harness terminal to shift solenoid valve B, and the ORN harness terminal to shift valve D.

30. Install the shift solenoid valve cover, dowel pins, and a new gasket.

31. Install the new solenoid valve body gasket on the solenoid valve cover, and install the ATF pipes with their filter side into the transmission housing. Install the new O-rings over the ATF pipes.

32. Install the A/T clutch pressure control solenoid valve A and B.

33. Secure the harness cover with the bolt.

34. Check the connectors for rust, dirt, or oil, clean or repair if necessary, then connect the connectors securely.

35. Apply molybdenum grease to the bore hole of the synthetic resin bushing in the shift cable end, and attach the shift cable end to the control lever, then insert the control pin into the control lever hole through the shift cable end, and secure the control pin with the spring clip/washer.

36. Secure the shift cable bracket with the nuts.

37. Install the air intake duct, air cleaner housing, and intercooler cover.

38. Install the battery base.

39. Install the battery tray, battery, battery cover, and battery hold-down bracket, then connect battery terminals.

40. Enter the audio system and navigation system (if equipped) anti-theft codes, then enter the audio presets, and set the clock.

41. Do the power window control unit reset procedure (see page 22-213).

Protected by AR



## A/T Clutch Pressure Control Solenoid Valve A Test

1. Connect the HDS to the DLC (A).

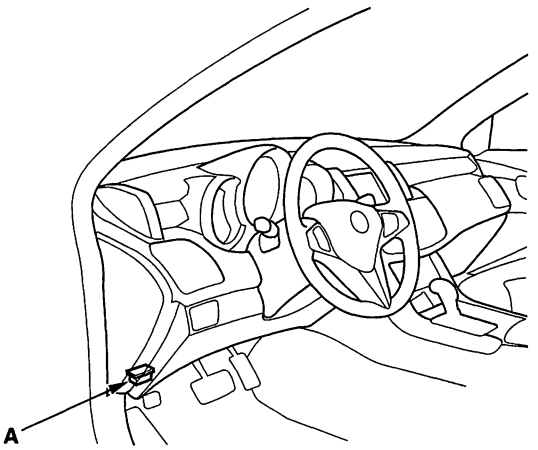


2. Choose Clutch Pressure Control (Linear) Solenoid A in the Miscellaneous Test Menu on the HDS.

   NOTE: If the HDS does not communicate with the PCM, troubleshoot the DLC circuit (see page 11-229).

3. Test A/T clutch pressure control solenoid valve A with the HDS.

   - If the valve tests OK, the test is complete. Disconnect the HDS.
   - If the valve does not test OK, follow the instructions on the HDS.
   - If the valve does not test OK, and the HDS does not determine the cause, go to step 4.

4. Make sure you have the audio system and navigation system (if equipped) anti-theft codes, and write down the audio presets.

5. Disconnect the negative terminal from the battery, then disconnect the positive terminal.

6. Remove the battery hold-down bracket, and remove the battery cover, battery, and battery tray.

7. Remove the battery base.

8. Remove the intercooler cover, air cleaner housing, and air intake duct.

9. Disconnect the A/T clutch pressure control solenoid valve A connector.

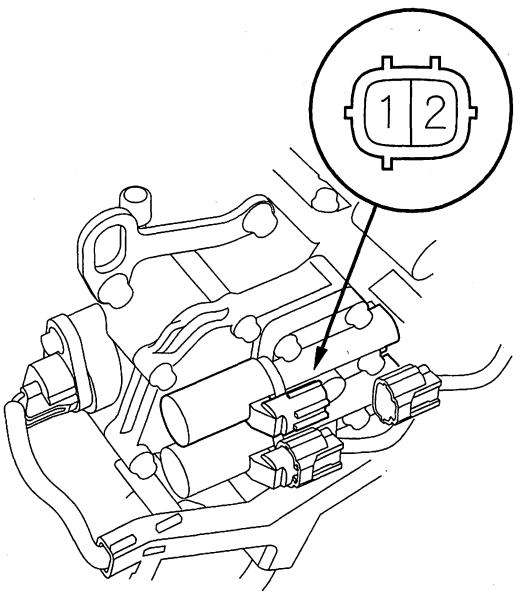


10. Measure A/T clutch pressure control solenoid valve A resistance at the connector terminals.

    **Standard: 3—10 Ω**

    - If the resistance is out of standard, replace A/T clutch pressure control solenoid valve A (see page 14-226).
    - If the resistance is within the standard, go to step 11.

11. Connect a jumper wire from the negative battery terminal to the solenoid valve A connector terminal No. 2, and connect another jumper wire from the positive battery terminal to the connector terminal No. 1.

    - If a clicking sound is heard, the valve is OK. Reconnect the connector, and install all removed parts.
    - If no clicking sound is heard, go to step 12.



BACK

Protected by AR

12. Remove the nuts securing the shift cable bracket (A).

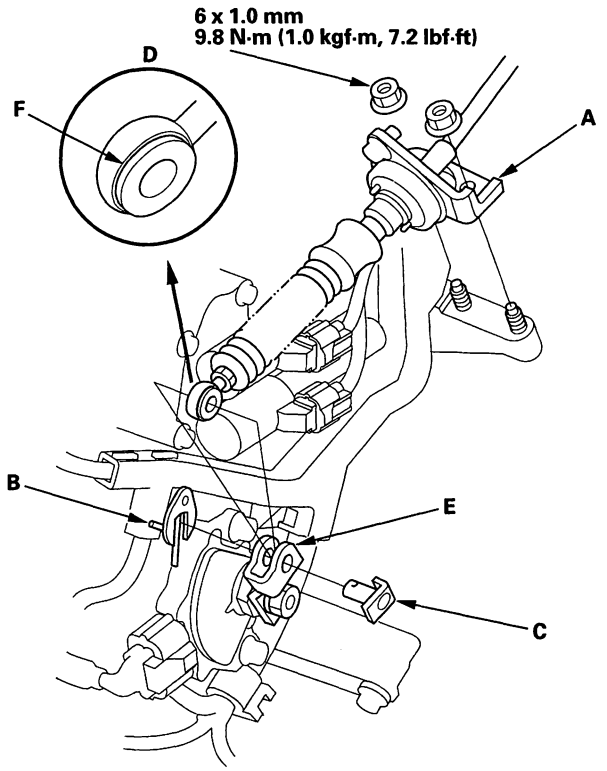


13. Remove the spring clip/washer (B) and control pin (C), then separate the shift cable end (D) from the control lever (E).

14. Check the synthetic resin bushing (F) in the shift cable end for a proper fit and wear. If the bushing is loose or worn, replace the shift cable (see page 14-282).

15. Disconnect the input shaft (mainshaft) speed sensor connector (A), output shaft (countershaft) speed sensor connector (B), 3rd clutch transmission fluid pressure switch connector (C), and ATF temperature sensor connector (D).

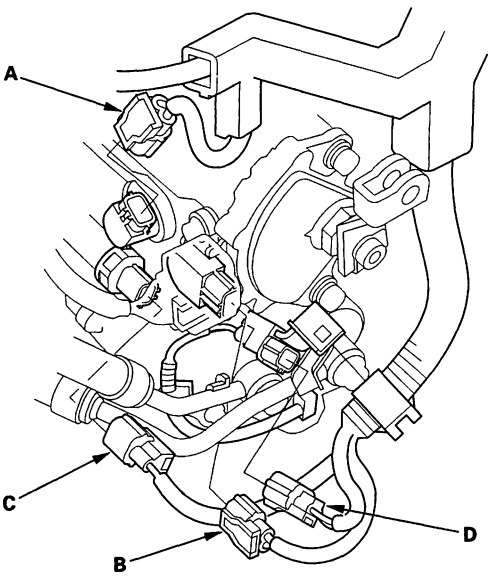


16. Disconnect the A/T clutch pressure control solenoid valve A connector (A), solenoid valve B connector (B), and shift solenoid harness connector (C).

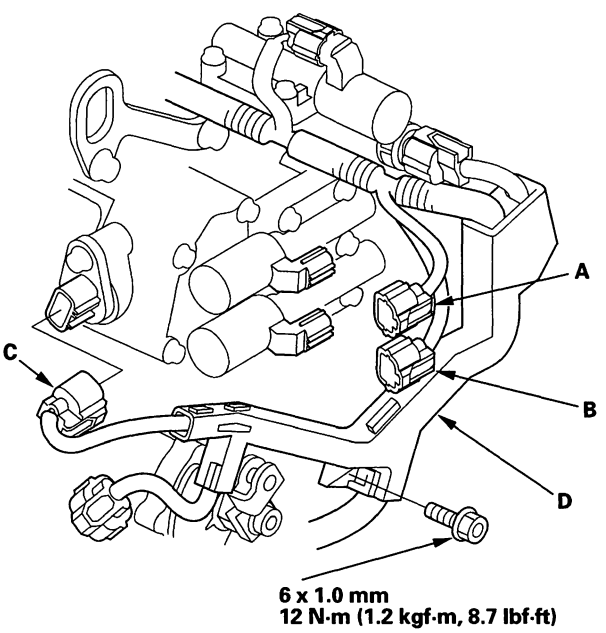


17. Remove the bolt securing the harness cover (D).

(cont'd)

Protected by AR



## A/T Clutch Pressure Control Solenoid Valve A Test (cont'd)

18. Remove the A/T clutch pressure control solenoid valve A and B, ATF pipes (C), gasket (D), and O-rings (E).

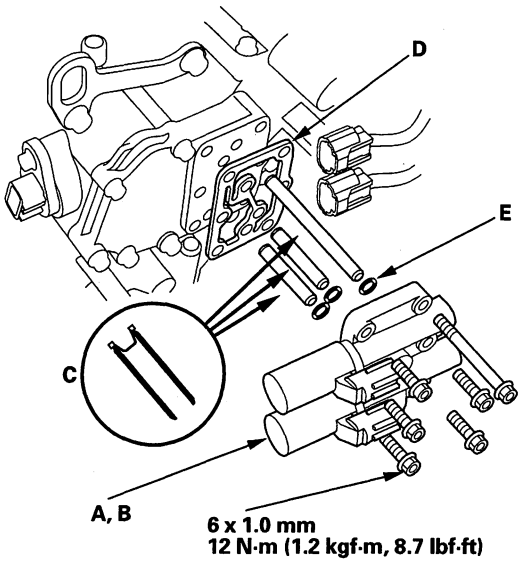


19. Check the fluid passage of the solenoid valve for contamination.

20. Connect a jumper wire from the negative battery terminal to A/T clutch pressure control solenoid valve A connector terminal No. 2, and connect another jumper wire from the positive battery terminal to the connector terminal No. 1. Make sure A/T clutch pressure control solenoid valve A moves.

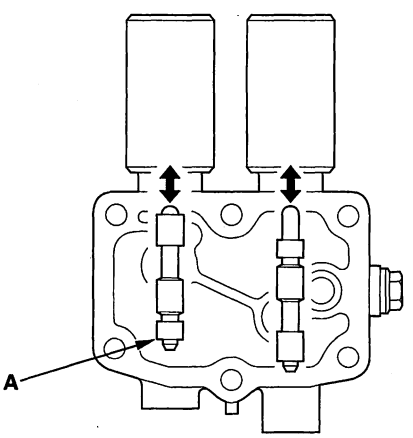


21. Disconnect one of the jumper wires and check valve movement at the fluid passage in valve body mounting surface. If the valve binds or moves sluggishly, or if the solenoid valve does not operate, replace the A/T clutch pressure control solenoid valve A and B.

22. Clean the mounting surface and fluid passage of the solenoid valve body and solenoid valve cover.

23. Install the new solenoid valve body gasket on the solenoid valve cover, and install the ATF pipes with the filter end in the transmission housing. Install the new O-rings over the ATF pipes.

24. Install the A/T clutch pressure control solenoid valve A and B.

25. Secure the harness cover with the bolt.

26. Check the connectors for rust, dirt, or oil, clean or repair if necessary, then connect the connectors securely.

27. Apply molybdenum grease to the bore hole of the synthetic resin bushing in the shift cable end, and attach the shift cable end to the control lever, then insert the control pin into the control lever hole through the shift cable end, and secure the control pin with the spring clip/washer.

28. Secure the shift cable bracket with the nuts.

29. Install the air intake duct, air cleaner housing, and intercooler cover.

30. Install the battery base.

31. Install the battery tray, battery, battery cover, and battery hold-down bracket, then connect battery terminals.

32. Enter the audio system and navigation system (if equipped) anti-theft codes, then enter the audio presets, and set the clock.

33. Do the power window control unit reset procedure (see page 22-213).



BACK

Protected by AR

## A/T Clutch Pressure Control Solenoid Valve B Test

1. Connect the HDS to the DLC (A).

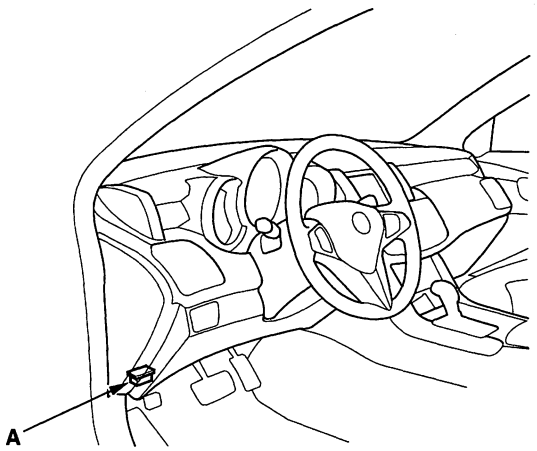


2. Choose Clutch Pressure Control (Linear) Solenoid B in the Miscellaneous Test Menu on the HDS.

   NOTE: If the HDS does not communicate with the PCM, troubleshoot the DLC circuit (see page 11-229).

3. Test A/T clutch pressure control solenoid valve B with the HDS.

   - If the valve tests OK, the test is complete. Disconnect the HDS.
   - If the valve does not test OK, follow the instructions on the HDS.
   - If the valve does not test OK, and the HDS does not determine the cause, go to step 4.

4. Make sure you have the audio system and navigation system (if equipped) anti-theft codes, and write down the audio presets.

5. Disconnect the negative terminal from the battery, then disconnect the positive terminal.

6. Remove the battery hold-down bracket, and remove the battery cover, battery, and battery tray.

7. Remove the battery base.

8. Remove the intercooler cover, air cleaner housing, and air intake duct.

9. Disconnect the A/T clutch pressure control solenoid valve B connector.

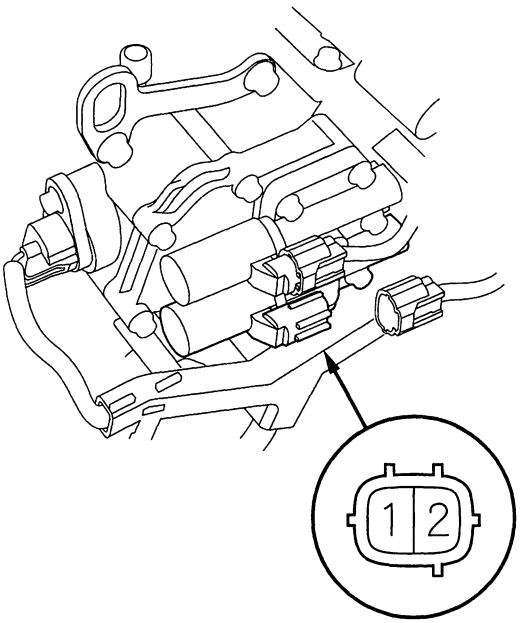


10. Measure A/T clutch pressure control solenoid valve B resistance at the connector terminals.

    **Standard: 3—10 Ω**

    - If the resistance is out of standard, replace A/T clutch pressure control solenoid valve B (see page 14-226).
    - If the resistance is within the standard, go to step 11.

11. Connect a jumper wire from the negative battery terminal to the solenoid valve B connector terminal No. 2, and connect another jumper wire from the positive battery terminal to the connector terminal No. 1.

    - If a clicking sound is heard, the valve is OK. Reconnect the connector, and install all removed parts.
    - If no clicking sound is heard, go to step 12.

(cont'd)

Protected by AR



## A/T Clutch Pressure Control Solenoid Valve B Test (cont'd)

12. Remove the nuts securing the shift cable bracket (A).

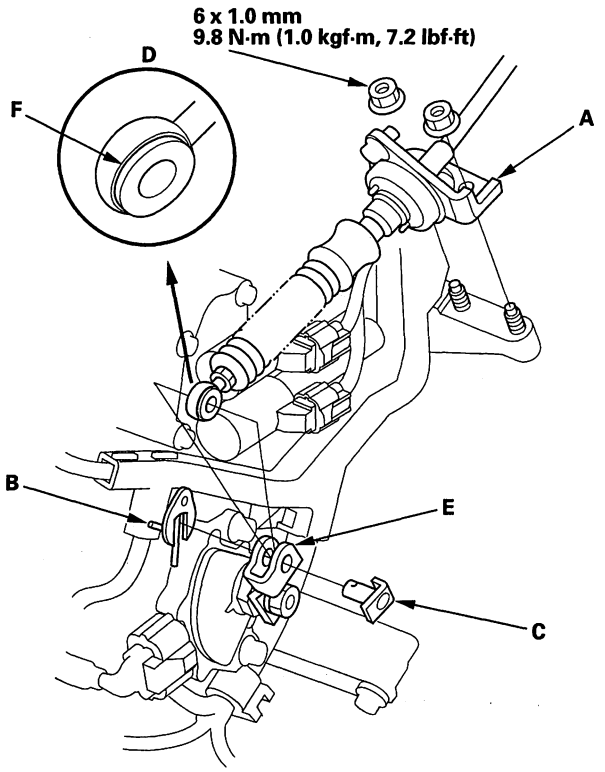


13. Remove the spring clip/washer (B) and control pin (C), then separate the shift cable end (D) from the control lever (E).

14. Check the synthetic resin bushing (F) in the shift cable end for a proper fit and wear. If the bushing is loose or worn, replace the shift cable (see page 14-282).

15. Disconnect the input shaft (mainshaft) speed sensor connector (A), output shaft (countershaft) speed sensor connector (B), 3rd clutch transmission fluid pressure switch connector (C), and ATF temperature sensor connector (D).

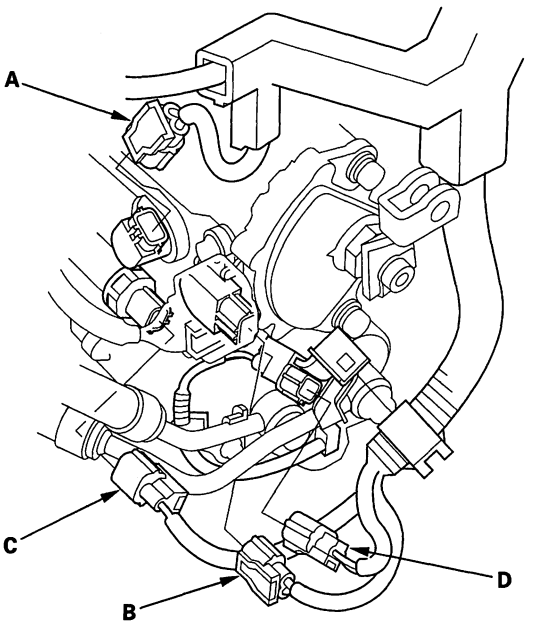


16. Disconnect the A/T clutch pressure control solenoid valve A connector (A), solenoid valve B connector (B), and shift solenoid harness connector (C).

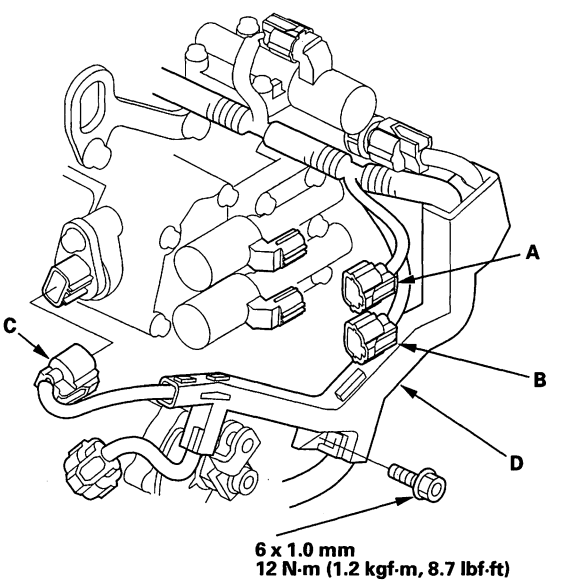


17. Remove the bolt securing the harness cover (D).



BACK

Protected by AR

18. Remove the A/T clutch pressure control solenoid valve A and B, ATF pipes (C), gasket (D), and O-rings (E).

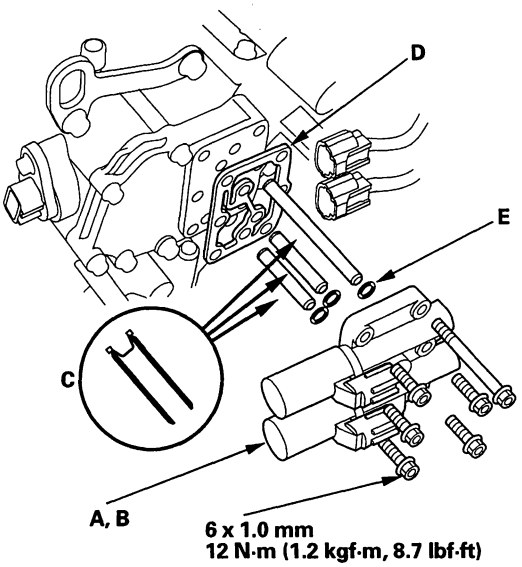


19. Check the fluid passage of the solenoid valve for contamination.

20. Connect a jumper wire from the negative battery terminal to A/T clutch pressure control solenoid valve B connector terminal No. 2, and connect another jumper wire from the positive battery terminal to the connector terminal No. 1. Make sure A/T clutch pressure control solenoid valve B moves.

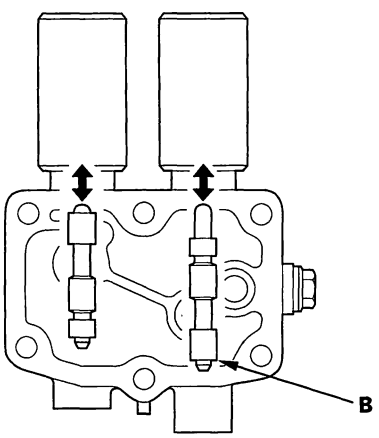


21. Disconnect one of the jumper wires and check valve movement at the fluid passage in valve body mounting surface. If the valve binds or moves sluggishly, or if the solenoid valve does not operate, replace the A/T clutch pressure control solenoid valve A and B.

22. Clean the mounting surface and fluid passage of the solenoid valve body and solenoid valve cover.

23. Install the new solenoid valve body gasket on the solenoid valve cover, and install the ATF pipes with the filter end in the transmission housing. Install the new O-rings over the ATF pipes.

24. Install the A/T clutch pressure control solenoid valve A and B.

25. Secure the harness cover with the bolt.

26. Check the connectors for rust, dirt, or oil, clean or repair if necessary, then connect the connectors securely.

27. Apply molybdenum grease to the bore hole of the synthetic resin bushing in the shift cable end, and attach the shift cable end to the control lever, then insert the control pin into the control lever hole through the shift cable end, and secure the control pin with the spring clip/washer.

28. Secure the shift cable bracket with the nuts.

29. Install the air intake duct, air cleaner housing, and intercooler cover.

30. Install the battery base.

31. Install the battery tray, battery, battery cover, and battery hold-down bracket, then connect battery terminals.

32. Enter the audio system and navigation system (if equipped) anti-theft codes, then enter the audio presets, and set the clock.

33. Do the power window control unit reset procedure (see page 22-213).

Protected by AR



## A/T Clutch Pressure Control Solenoid Valve A and B Replacement

1. Make sure you have the audio system and navigation system (if equipped) anti-theft codes, and write down the audio presets.

2. Disconnect the negative terminal from the battery, then disconnect the positive terminal.

3. Remove the battery hold-down bracket, and remove the battery cover, battery, and battery tray.

4. Remove the battery base.

5. Remove the intercooler cover, air cleaner housing, and air intake duct.

6. Remove the nuts securing the shift cable bracket (A).

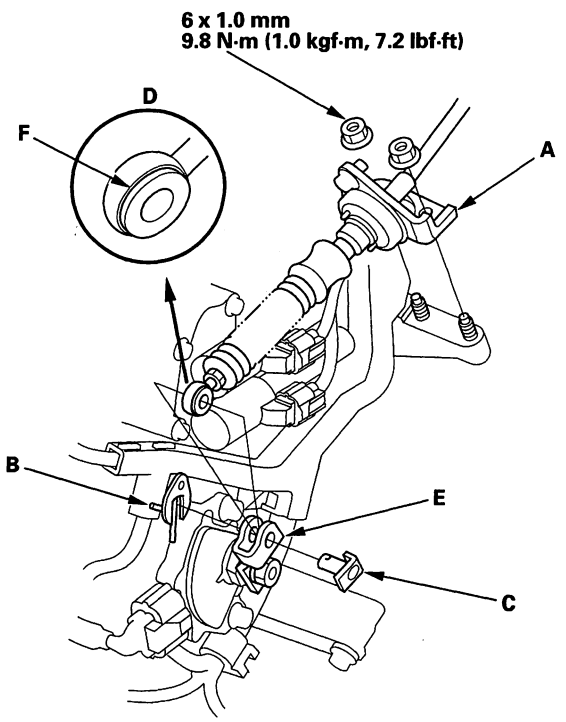


7. Remove the spring clip/washer (B) and control pin (C), then separate the shift cable end (D) from the control lever (E).

8. Check the synthetic resin bushing (F) in the shift cable end for a proper fit and wear. If the bushing is loose or worn, replace the shift cable (see page 14-282).

9. Disconnect the input shaft (mainshaft) speed sensor connector (A), output shaft (countershaft) speed sensor connector (B), 3rd clutch transmission fluid pressure switch connector (C), and ATF temperature sensor connector (D).

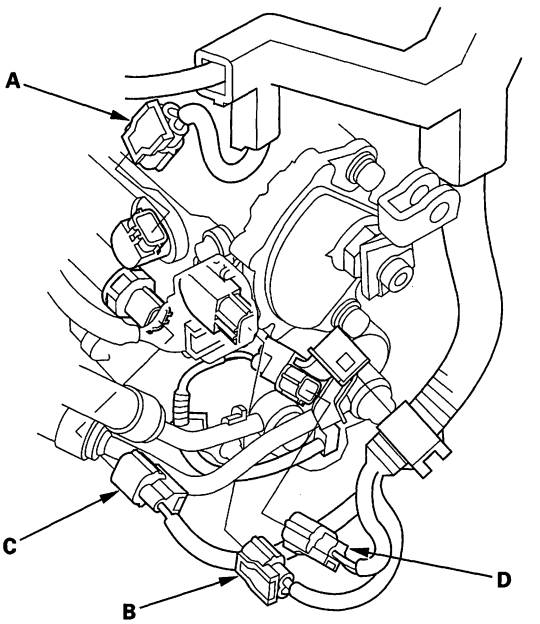


10. Disconnect the A/T clutch pressure control solenoid valve A connector (A), solenoid valve B connector (B), and shift solenoid harness connector (C).

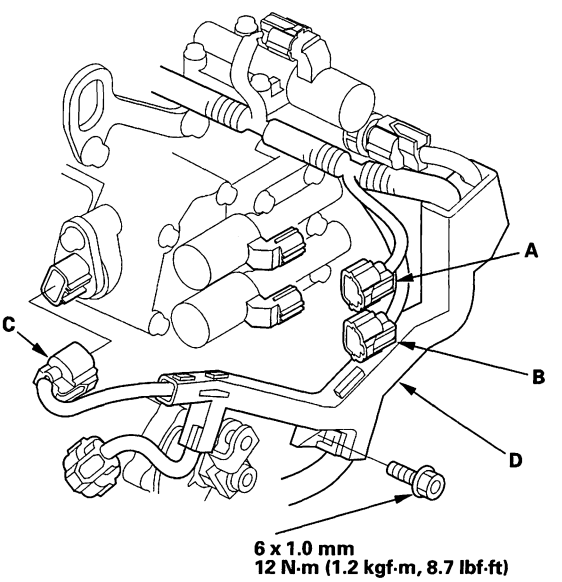


11. Remove the bolt securing the harness cover (D).



BACK

Protected by AR

12. Remove the A/T clutch pressure control solenoid valve A and B, ATF pipes (C), gasket (D), and O-rings (E).

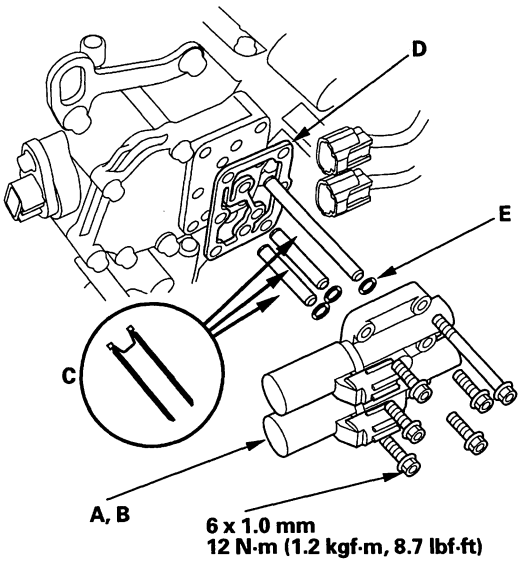


13. Check the fluid passage of the A/T clutch pressure control solenoid valve for dust or dirt, and clean the passage.

14. Install the new solenoid valve body gasket on the solenoid valve cover, and install the ATF pipes with the filter end in the transmission housing. Install the new O-rings over the ATF pipes.

15. Install the A/T clutch pressure control solenoid valve A and B.

16. Secure the harness cover with the bolt.

17. Check the connectors for rust, dirt, or oil, clean or repair if necessary, then connect the connectors securely.

18. Apply molybdenum grease to the bore hole of the synthetic resin bushing in the shift cable end, and attach the shift cable end to the control lever, then insert the control pin into the control lever hole through the shift cable end, and secure the control pin with the spring clip/washer.

19. Secure the shift cable bracket with the nuts.

20. Install the air intake duct, air cleaner housing, and intercooler cover.

21. Install the battery base.

22. Install the battery tray, battery, battery cover, and battery hold-down bracket, then connect battery terminals.

23. Enter the audio system and navigation system (if equipped) anti-theft codes, then enter the audio presets, and set the clock.

24. Do the power window control unit reset procedure (see page 22-213).

Protected by AR



## A/T Clutch Pressure Control Solenoid Valve C Test

1. Connect the HDS to the DLC (A).

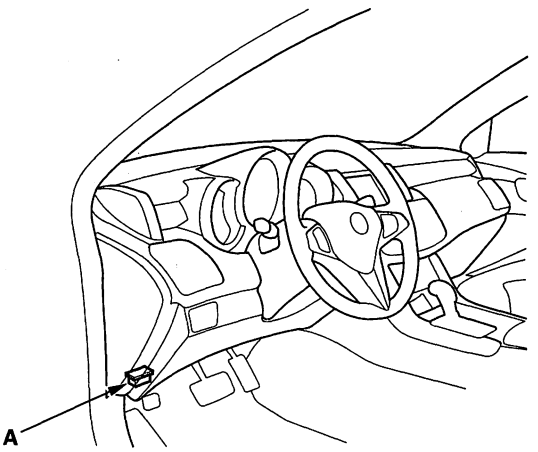


2. Choose Clutch Pressure Control (Linear) Solenoid C in the Miscellaneous Test Menu on the HDS.

   NOTE: If the HDS does not communicate with the PCM, troubleshoot the DLC circuit (see page 11-229).

3. Test the A/T clutch pressure control solenoid valve C with the HDS.

   - If the valve tests OK, the test is complete. Disconnect the HDS.
   - If the valve does not test OK, follow the instructions on the HDS.
   - If the valve does not test OK, and the HDS does not determine the cause, go to step 4.

4. Make sure you have the audio system and navigation system (if equipped) anti-theft codes, and write down the audio presets.

5. Disconnect the negative terminal from the battery, then disconnect the positive terminal.

6. Remove the battery hold-down bracket, and remove the battery cover, battery, and battery tray.

7. Remove the battery base.

8. Remove the intercooler cover, air cleaner housing, and air intake duct.

9. Disconnect the A/T clutch pressure control solenoid valve C connector.

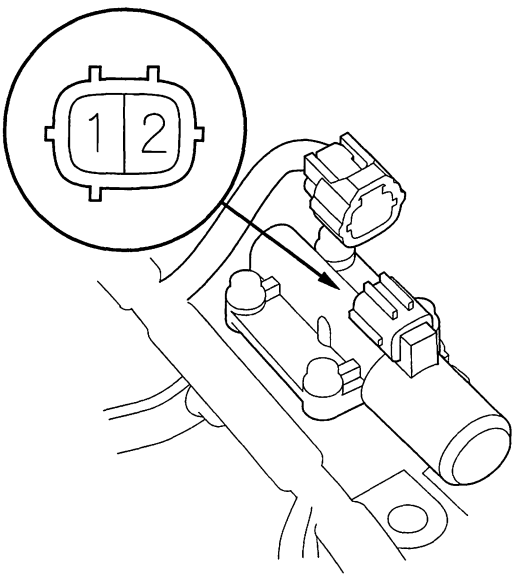


10. Measure A/T clutch pressure control solenoid valve C resistance at the connector terminals.

    **Standard: 3—10 Ω**

    - If the resistance is out of standard, replace A/T clutch pressure control solenoid valve C (see page 14-231).
    - If the resistance is within the standard, go to step 11.

11. Connect a jumper wire from the negative battery terminal to the solenoid valve C connector terminal No. 2, and connect another jumper wire from the positive battery terminal to the connector terminal No. 1.

    - If a clicking sound is heard, the valve is OK. Reconnect the connector, and install all removed parts.
    - If no clicking sound is heard, go to step 12.



BACK

Protected by AR

12. Remove the A/T clutch pressure control solenoid valve C.

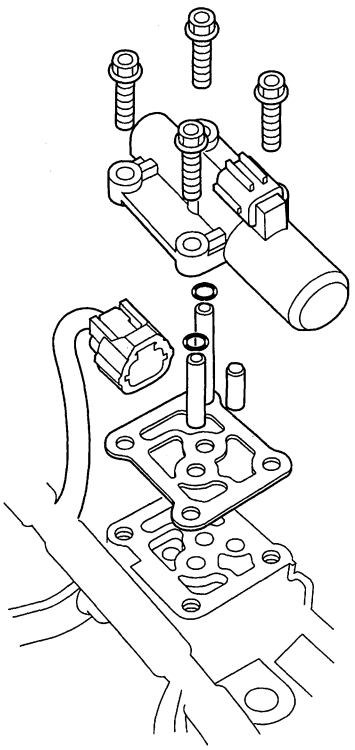

13. Remove the ATF joint pipes, O-rings, ATF pipe, and gasket.

14. Check the fluid passage of the solenoid valve for contamination.

15. Connect a jumper wire from the negative battery terminal to A/T clutch pressure control solenoid valve C connector terminal No. 2, and connect another jumper wire from the positive battery terminal to the connector terminal No. 1. Make sure A/T clutch pressure control solenoid valve C moves.

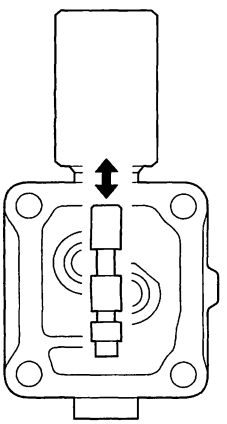

16. Disconnect one of the jumper wires and check valve movement at the fluid passage in valve body mounting surface. If the valve binds or moves sluggishly, or if the solenoid valve does not operate, replace the A/T clutch pressure control solenoid valve C.

17. Clean the mounting surface and fluid passage of the solenoid valve body and transmission housing.

(cont'd)

Protected by AR



## A/T Clutch Pressure Control Solenoid Valve C Test (cont'd)

18. Install the 8 x 53 mm ATF joint pipe (A) with the filter end into its mounting hole (B).

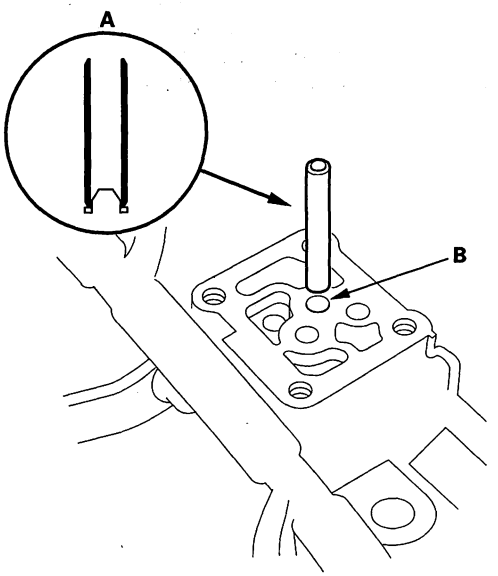


19. Check the height (A) of the 8 x 53 mm ATF joint pipe (B) between the top (C) of the pipe and solenoid valve body mounting surface (D). The height is about 7 mm (0.3 in.). If the height is over 7 mm (0.3 in.), push the pipe until it bottoms in the accumulator body.

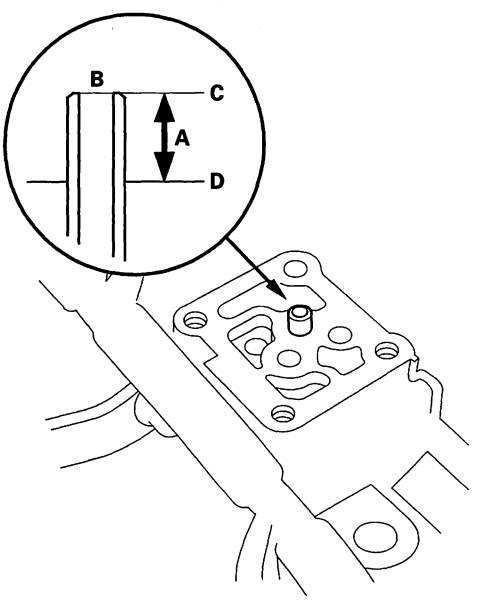


20. Install the new gasket (A) on the transmission housing, and install the 8 x 34.5 mm ATF joint pipe (B) with the filter end into the transmission housing and 8 x 25.2 mm ATF pipe (D).

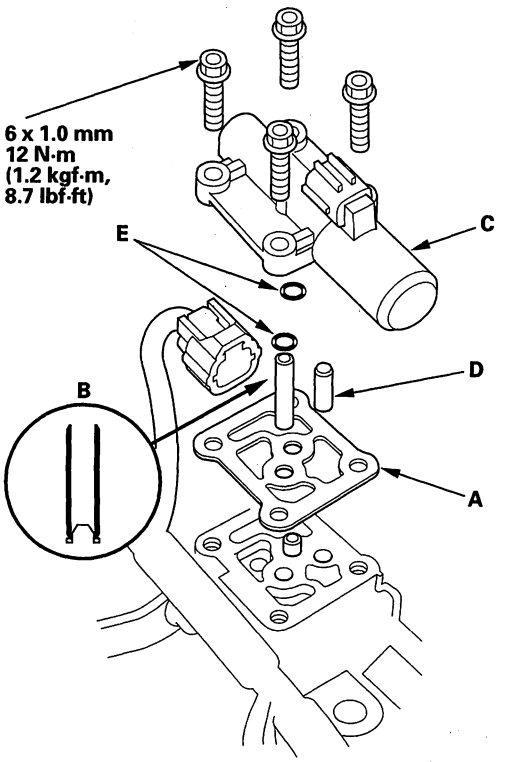


21. Install the new O-rings (E) over the ATF joint pipes.

22. Install A/T clutch pressure control solenoid valve C.

23. Check the connector for rust, dirt, or oil, then connect the connector securely.

24. Install the air intake duct, air cleaner housing, and intercooler cover.

25. Install the battery base.

26. Install the battery tray, battery, battery cover, and battery hold-down bracket, then connect battery terminals.

27. Enter the audio system and navigation system (if equipped) anti-theft codes, then enter the audio presets, and set the clock.

28. Do the power window control unit reset procedure (see page 22-213).



BACK

Protected by AR

# A/T Clutch Pressure Control Solenoid Valve C Replacement

1. Make sure you have the audio system and navigation system (if equipped) anti-theft codes, and write down the audio presets.

2. Disconnect the negative terminal from the battery, then disconnect the positive terminal.

3. Remove the battery hold-down bracket, and remove the battery cover, battery, and battery tray.

4. Remove the battery base.

5. Remove the intercooler cover, air cleaner housing, and air intake duct.

6. Disconnect the A/T clutch pressure control solenoid valve C connector.

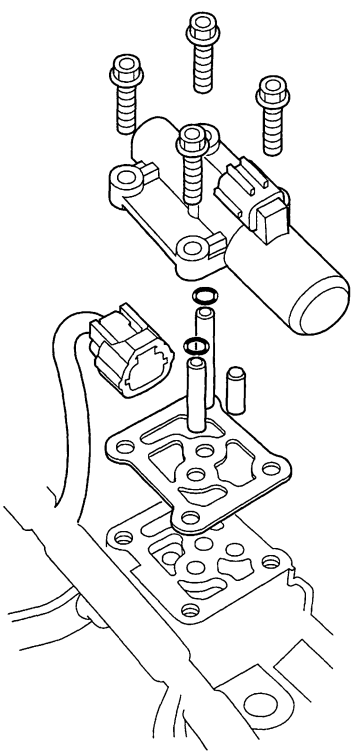

7. Remove A/T clutch pressure control solenoid valve C.

8. Remove the ATF joint pipes, O-rings, ATF pipe, and gasket.

9. Clean the mounting surface and the fluid passage of the solenoid valve body and transmission housing.

10. Install the 8 x 53 mm ATF joint pipe (A) with the filter end into its mounting hole (B).

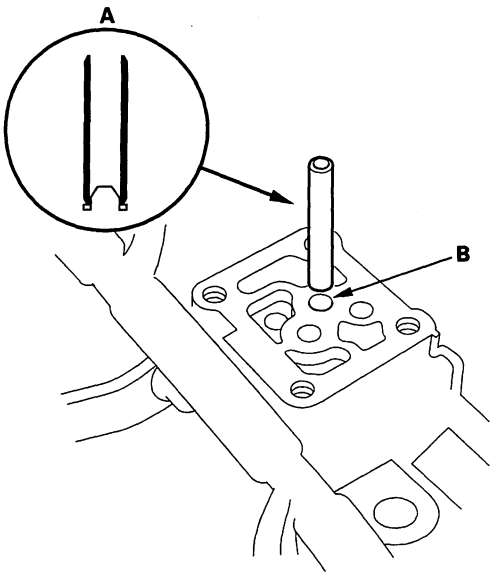


11. Check the height (A) of the 8 x 53 mm ATF joint pipe (B) between the top (C) of the pipe and solenoid valve body mounting surface (D). The height is about 7 mm (0.3 in.). If the height is over 7 mm (0.3 in.), push the pipe until it bottoms in the accumulator body.

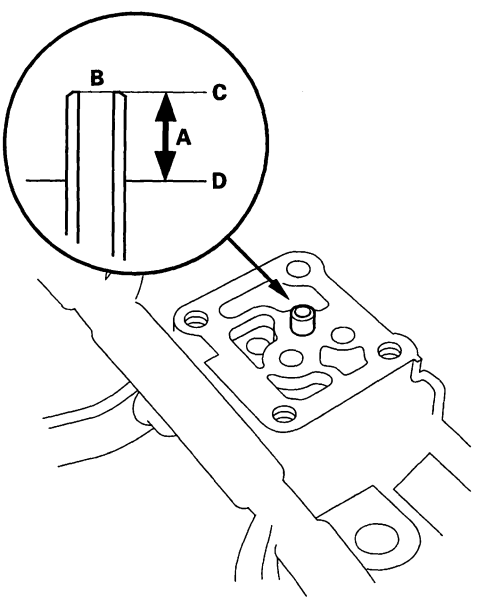


(cont'd)

Protected by AR



## A/T Clutch Pressure Control Solenoid Valve C Replacement (cont'd)

12. Install the new gasket (A) on the transmission housing, and install the 8 x 34.5 mm ATF joint pipe (B) with the filter end into the transmission housing and 8 x 25.2 mm ATF pipe (D).

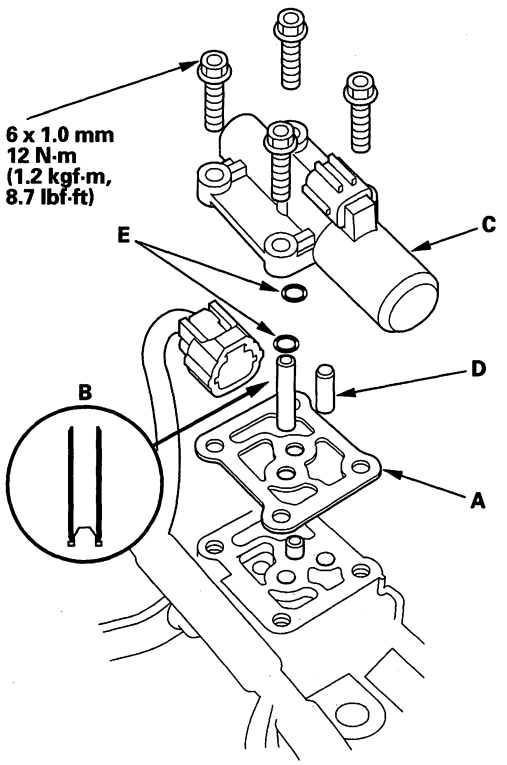


13. Install the new O-rings (E) over the ATF joint pipes.

14. Install the A/T clutch pressure control solenoid valve C.

15. Check the connector for rust, dirt, or oil, then connect the connector securely.

16. Install the air intake duct, air cleaner housing, and intercooler cover.

17. Install the battery base.

18. Install the battery tray, battery, battery cover, and battery hold-down bracket, then connect battery terminals.

19. Enter the audio system and navigation system (if equipped) anti-theft codes, then enter the audio presets, and set the clock.

20. Do the power window control unit reset procedure (see page 22-213).



BACK

Protected by AR

## Input Shaft (Mainshaft) Speed Sensor Replacement

1. Raise the vehicle up on a lift, or apply the parking brake, block the rear wheels, and raise the front of the vehicle. Make sure it is securely supported.
2. Remove the splash shield.
3. Disconnect the input shaft (mainshaft) speed sensor connector, and remove the input shaft (mainshaft) speed sensor.

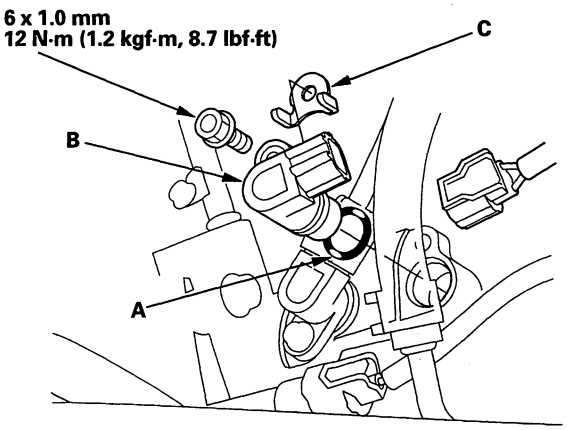


4. Install the new O-ring (A) on the new input shaft (mainshaft) speed sensor (B), then install the input shaft (mainshaft) speed sensor and sensor washer (C) in the transmission housing.
5. Check the connector for rust, dirt, or oil, then connect the connector securely.
6. Install the splash shield.

## Output Shaft (Countershaft) Speed Sensor Replacement

1. Raise the vehicle up on a lift, or apply the parking brake, block the rear wheels, and raise the front of the vehicle. Make sure it is securely supported.
2. Remove the splash shield.
3. Disconnect the output shaft (countershaft) speed sensor connector, and remove the output shaft (countershaft) speed sensor.

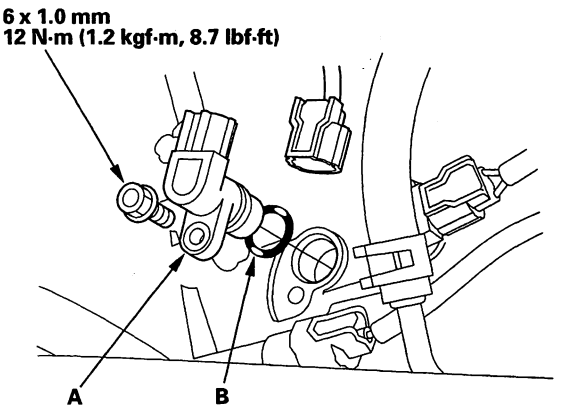


4. Install the new O-ring (A) on the new output shaft (countershaft) speed sensor (B), then install the output shaft (countershaft) speed sensor in the transmission housing.
5. Check the connector for rust, dirt, or oil, then connect the connector securely.
6. Install the splash shield.

Protected by AR



## 2nd Clutch Transmission Fluid Pressure Switch Replacement

1. Make sure you have the audio system and navigation system (if equipped) anti-theft codes, and write down the audio presets.
2. Disconnect the negative terminal from the battery, then disconnect the positive terminal.
3. Remove the battery hold-down bracket, and remove the battery cover, battery, and battery tray.
4. Remove the battery base.
5. Remove the intercooler cover, air cleaner housing, and air intake duct.
6. Remove the air intake duct (A).

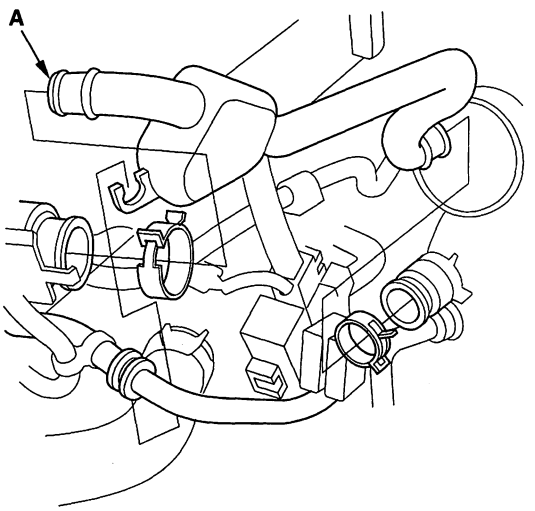


7. Disconnect the 2nd clutch transmission fluid pressure switch connector, and remove the switch.

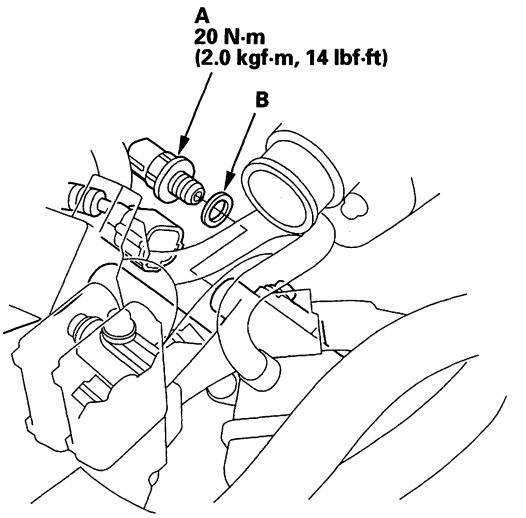


8. Install the new 2nd clutch transmission fluid pressure switch (A) and a new sealing washer (B), and tighten the switch.
9. Make sure there is no water, oil, dust, or foreign particles inside the connector.
10. Connect the connector securely.
11. Install the air intake duct, and secure it with the clips. Install the hose in the clamp on the air intake duct.
12. Install the air intake duct, air cleaner housing, and intercooler cover.
13. Install the battery base.
14. Install the battery tray, battery, battery cover, and battery hold-down bracket, then connect battery terminals.
15. Enter the audio system and navigation system (if equipped) anti-theft codes, then enter the audio presets, and set the clock.
16. Do the power window control unit reset procedure (see page 22-213).



BACK

Protected by AR

## 3rd Clutch Transmission Fluid Pressure Switch Replacement

1. Raise the vehicle up on a lift, or apply the parking brake, block the rear wheels, and raise the front of the vehicle. Make sure it is securely supported.

2. Remove the splash shield.

3. Disconnect the 3rd clutch transmission fluid pressure switch connector, and remove the switch.

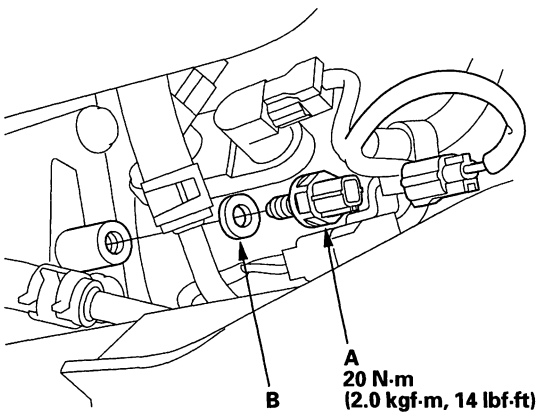


4. Install the new 3rd clutch transmission fluid pressure switch (A) and a new sealing washer (B), and tighten the switch.

5. Make sure there is no water, oil, dust, or foreign particles inside the connector.

6. Connect the connector securely.

7. Install the splash shield.

Protected by AR



## 4th Clutch Transmission Fluid Pressure Switch Replacement

1. Make sure you have the audio system and navigation system (if equipped) anti-theft codes, and write down the audio presets.
2. Disconnect the negative terminal from the battery, then disconnect the positive terminal.
3. Remove the battery hold-down bracket, and remove the battery cover, battery, and battery tray.
4. Remove the battery base.
5. Remove the intercooler cover, air cleaner housing, and air intake duct.
6. Disconnect the 4th clutch transmission fluid pressure switch connector, and remove the switch.

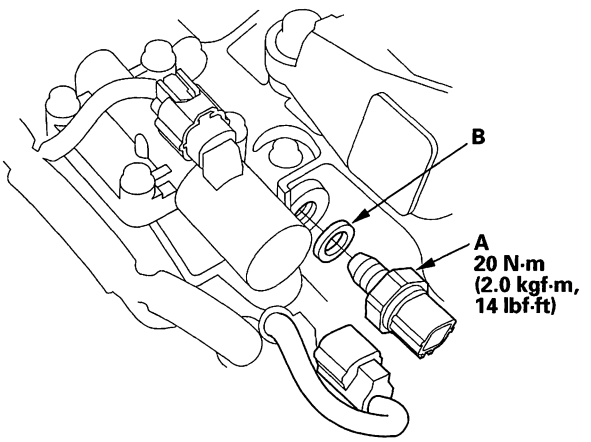


7. Install the new 4th clutch transmission fluid pressure switch (A) and a new sealing washer (B), and tighten the switch.
8. Make sure there is no water, oil, dust, or foreign particles inside the connector.
9. Connect the connector securely.
10. Install the air intake duct, air cleaner housing, and intercooler cover.
11. Install the battery base.
12. Install the battery tray, battery, battery cover, and battery hold-down bracket, then connect battery terminals.
13. Enter the audio system and navigation system (if equipped) anti-theft codes, then enter the audio presets, and set the clock.
14. Do the power window control unit reset procedure (see page 22-213).



BACK

Protected by AR

## ATF Temperature Sensor Replacement

1. Raise the vehicle up on a lift, or apply the parking brake, block the rear wheels, and raise the front of the vehicle. Make sure it is securely supported.

2. Remove the splash shield.

3. Remove the drain plug (A), and drain the automatic transmission fluid (ATF).

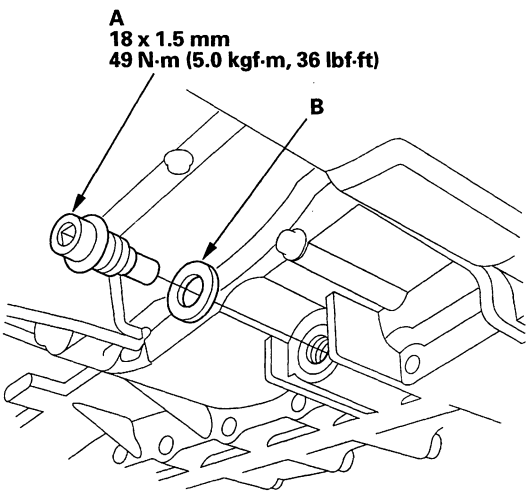


4. Reinstall the drain plug with a new sealing washer (B).

5. Disconnect the ATF temperature sensor connector (A), then remove the connector from the connector bracket (B).

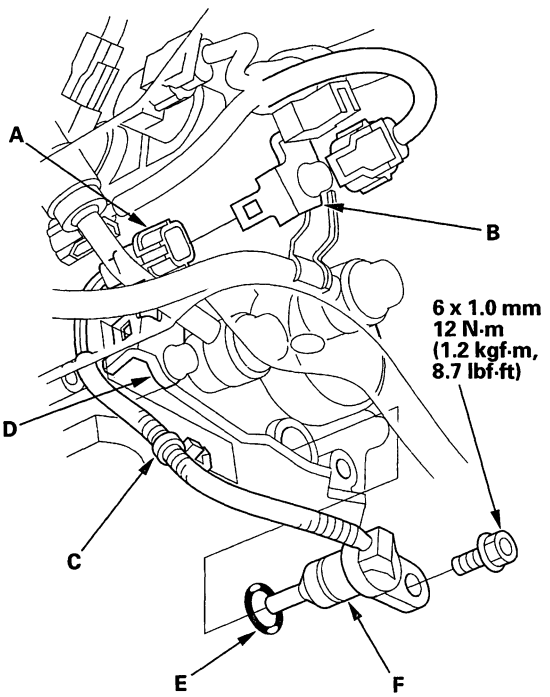


6. Remove the harness clamp (C) from its bracket (D).

7. Remove the ATF temperature sensor, and replace the sensor.

8. Install the new O-ring (E) on the new ATF temperature sensor (F), and install the ATF temperature sensor.

9. Check the connector for rust, dirt, or oil, then connect the connector securely.

10. Install the harness clamp on its bracket.

11. Refill the transmission with ATF (see step 5 on page 14-239).

12. Install the splash shield.

BACK

Protected by AR



## ATF Level Check

NOTE: Keep all foreign particles out of the transmission.

1. Park the vehicle on the level ground.

2. Warm up the engine to normal operating temperature (the radiator fan comes on), and turn the engine off. Do not allow the engine to warm up longer than the time it takes for the radiator fan to come on twice.

   NOTE: Check the fluid level within 60—90 seconds after turning the engine off. Higher fluid level may be indicated if the radiator fan comes on twice or more.

3. Remove the dipstick (yellow loop) (A) from the dipstick guide tube, and wipe it with a clean cloth.

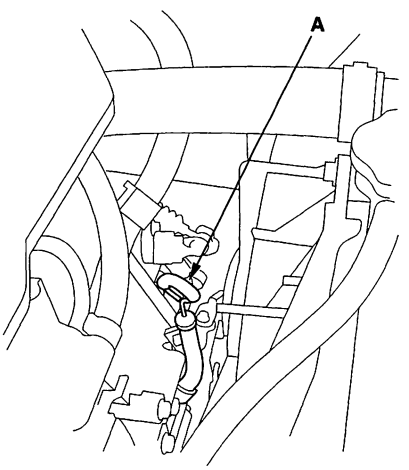


4. Insert the dipstick into the guide tube.

5. Remove the dipstick and check the fluid level. It should be between the upper mark (A) and lower mark (B).

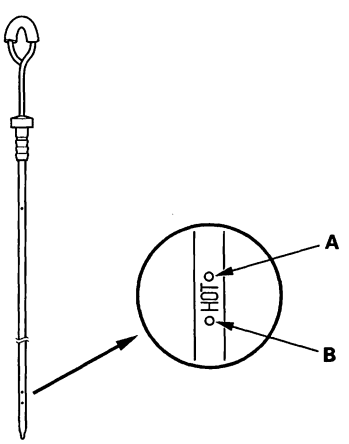


6. If the level is below the lower mark, check for fluid leaks at the transmission, and hose and line joints. If a problem is found, fix it before filling the transmission.

   NOTE: If the vehicle is driven when the ATF level is below the lower mark:
   - Transmission damage will result.
   - Vehicle does not move in any gear.
   - Vehicle accelerates poorly, and flares when starting off in the D and R positions.
   - The engine vibrates at idle.

7. If the level is above the upper mark, drain the ATF to proper level (see step 3 on page 14-239).

   NOTE: If the vehicle is driven when the ATF level is above the upper mark, the vehicle may creep forward while in the N position, or have shifting problem.

8. If necessary, fill the transmission with the ATF through the dipstick guide tube opening (A) to bring the fluid level midway between the upper mark and lower mark of the dipstick. Do not fill past the upper mark. Always use Honda ATF-Z1 Automatic Transmission Fluid (ATF). Using a non-Honda ATF can affect shift quality.

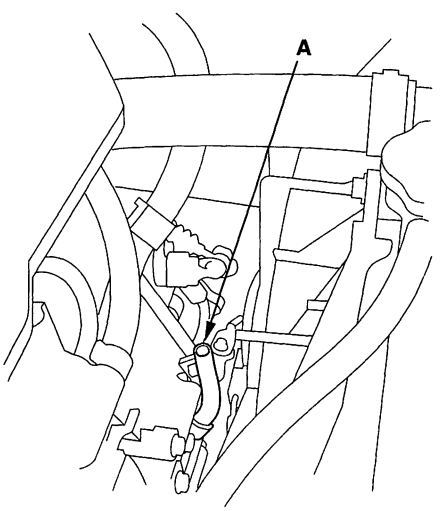


9. Insert the dipstick back into the dipstick guide tube.



BACK

Protected by AR

## ATF Replacement

NOTE: Keep all foreign particles out of the transmission.

1. Park the vehicle on the level ground.

2. Warm up the engine to normal operating temperature (the radiator fan comes on), and turn the engine off.

3. Remove the ATF filler bolt and drain plug (A), and drain the automatic transmission fluid (ATF).

   NOTE: If a cooler cleaning is done, refer to ATF Cooler Cleaning (see page 14-271).

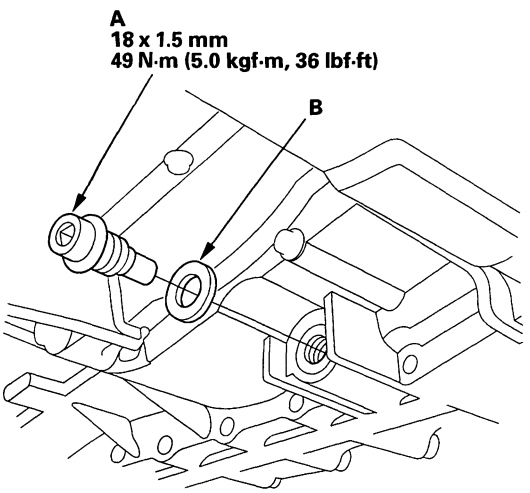


4. Reinstall the drain plug with a new sealing washer (B).

5. Refill the transmission with the recommended fluid into the filler hole (A). Always use Honda ATF-Z1 Automatic Transmission Fluid (ATF). Using a non-Honda ATF can affect shift quality.

   **Automatic Transmission Fluid Capacity:**
   **3.3 L (3.5 US qt) at change**
   **7.8 L (8.2 US qt) at overhaul**

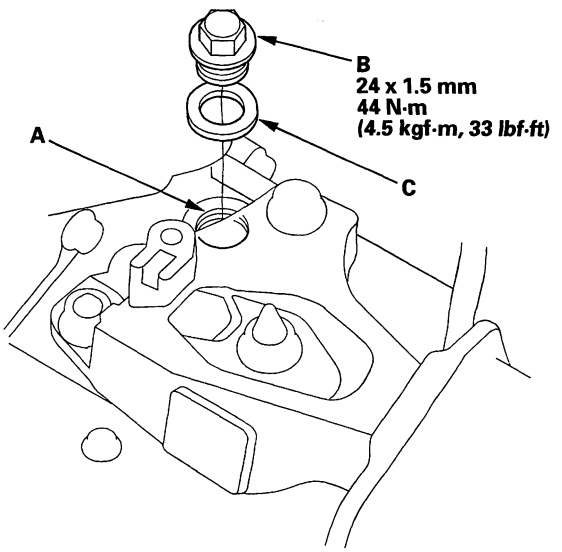


6. Install the ATF filler bolt (B) and a new sealing washer (C).

7. Check that the fluid level is between the upper mark and lower mark on the dipstick (see page 14-238).

8. If the maintenance minder required to replace the ATF, reset the maintenance minder (see page 3-9), and this procedure is complete. If the maintenance minder did not require to replace the ATF, go to step 9 and reset the ATF life with the HDS.

(cont'd)

Protected by AR



## ATF Replacement (cont'd)

9. Connect the HDS to the DLC (A), and go to the BODY ELECTRICAL. If the HDS does not communicate with the PCM, troubleshoot the DLC circuit (see page 11-229).

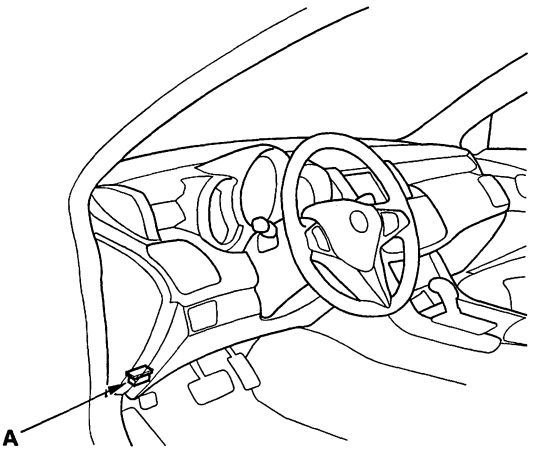


10. Select ADJUSTMENT in the GAUGES MENU with the HDS.

11. Select RESET in the MAINTENANCE MINDER with the HDS.

12. Select MAINTENANCE SUB ITEM 3 RESET, and reset the ATF life with the HDS.



BACK

Protected by AR

## Transfer Assembly Fluid Replacement

1. Bring the transmission up to normal operating temperature (the radiator fan comes on).

2. Park the vehicle on level ground, and turn the engine off.

3. Remove the drain plug (A), and drain the transfer fluid (hypoid gear oil).

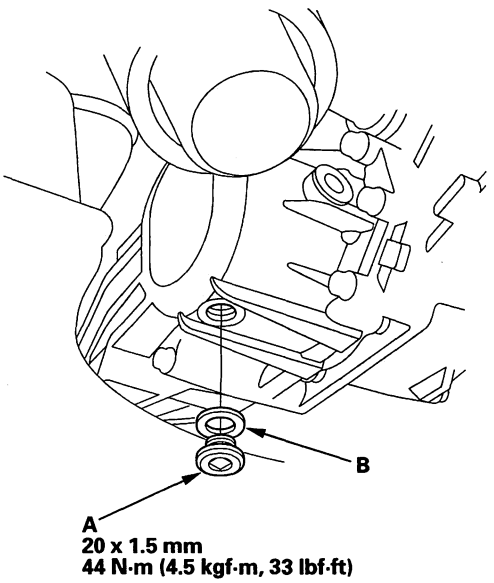


4. Reinstall the drain plug with a new sealing washer (B).

5. Remove the filler plug (A) and sealing washer (B).

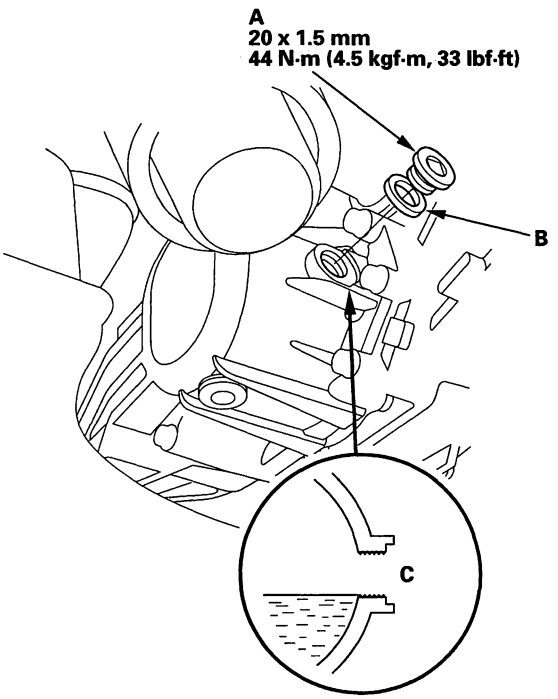


6. Refill the transfer assembly with the recommended fluid (hypoid gear oil) through the filler hole (C) until the fluid flows out. Use a SAE 90 or SEA 80W-90 viscosity hypoid gear oil, API classified GL4 or GL5 only.

   **Viscosity**
   **SAE 90: Above 0 °F (−18 °C)**
   **SAE 80W-90: Below 0 °F (−18 °C)**

   **Transfer Fluid (Hypoid Gear Oil) Capacity:**
   **0.43 L (0.45 US qt) at fluid change**

7. Install the filler plug with a new sealing washer.

BACK

Protected by AR



## Transfer Assembly Inspection

1. Raise the vehicle, and make sure it is supported securely.

2. Shift the transmission into the N position.

3. Make a reference mark (A) across the propeller shaft (B) and the transfer companion flange (C).

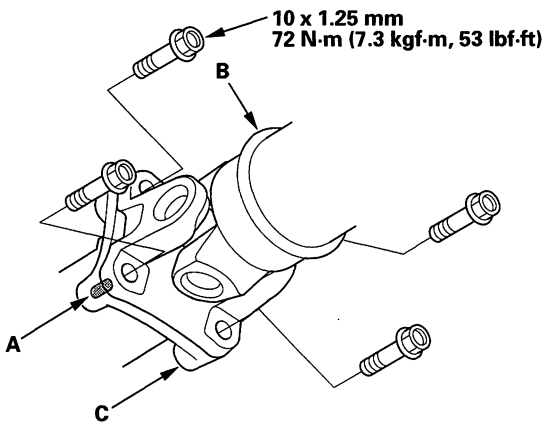


4. Separate the propeller shaft from the transfer companion flange.

5. Set a dial indicator (A) on the transfer companion flange (B); position dial indicator tip (C) on the direct extension of the bolt hole center (D).

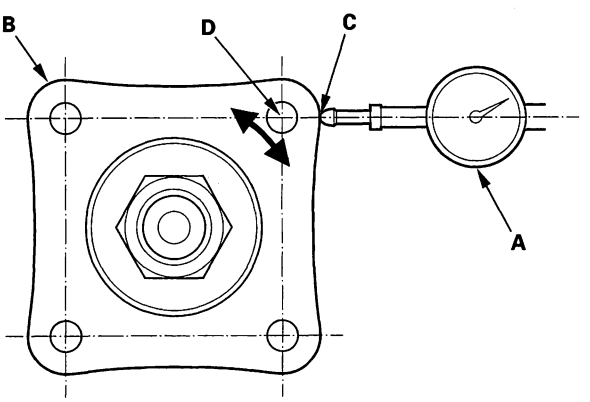


6. Measure the transfer gear backlash.

   **Standard: 0.06—0.16 mm (0.002—0.006 in.)**

7. If the measurement is out of standard, remove the transfer assembly, and adjust the transfer gear backlash (see page 14-418).

8. Check for fluid leaks between the mating faces of the transfer assembly and transmission.

9. If there is a leak, remove the transfer assembly, remove the transfer cover, and replace the O-ring.

10. Check for leaks between the transfer companion flange and transfer oil seal.

11. If there is a leak, remove the transfer assembly from the transmission, and replace the transfer oil seal and O-ring on the transfer output shaft (hypoid gear). If oil seal and O-ring replacement is required, you will need to check and adjust the transfer gear tooth contact, transfer gear backlash, the tapered roller bearing starting torque, and the total starting torque (see page 14-418). Do not replace the oil seal with the transfer assembly on the transmission.



BACK

Protected by AR

## Transfer Assembly Removal

1. Raise the vehicle, and make sure it is supported securely.

2. Shift the transmission into the N position.

3. Remove the drain plug (A), and drain the automatic transmission fluid (ATF).

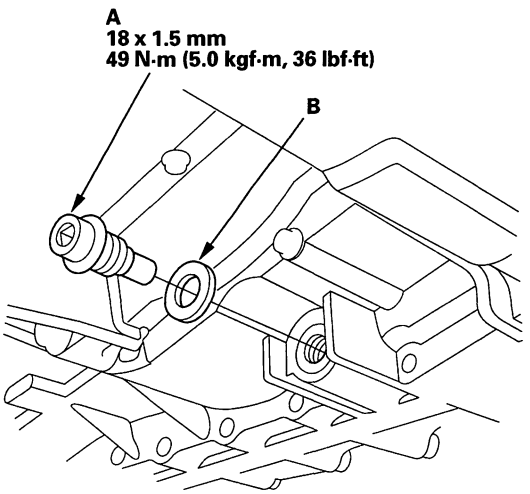


4. Reinstall the drain plug with a new sealing washer (B).

5. Remove the three-way catalytic converter.

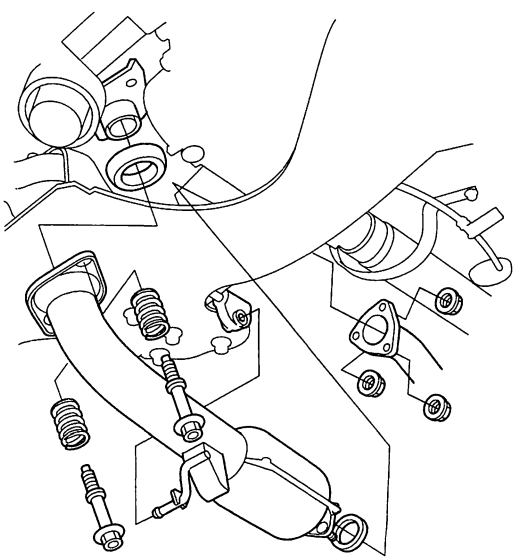

6. Remove the bolt securing the transfer breather hose bracket (A), and disconnect the breather hose (B) from the breather pipe (C) on the transfer assembly.

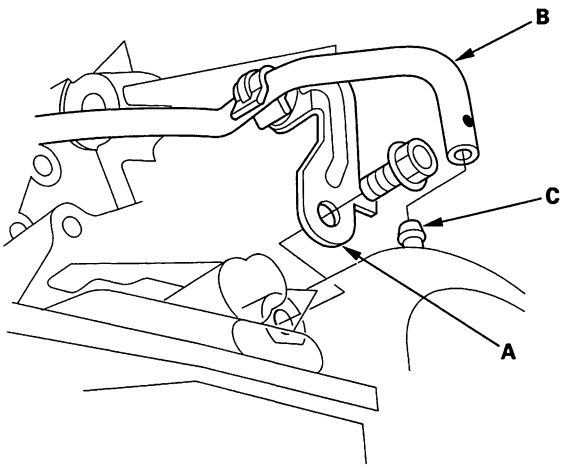


7. Make a reference mark (A) across the propeller shaft (B) and the transfer companion flange (C).

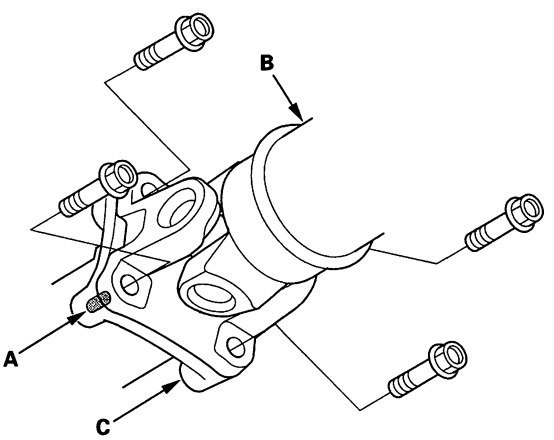


8. Separate the propeller shaft from the transfer companion flange.

(cont'd)

Protected by AR



## Transfer Assembly Removal (cont'd)

9. Remove the transfer assembly from the transmission.

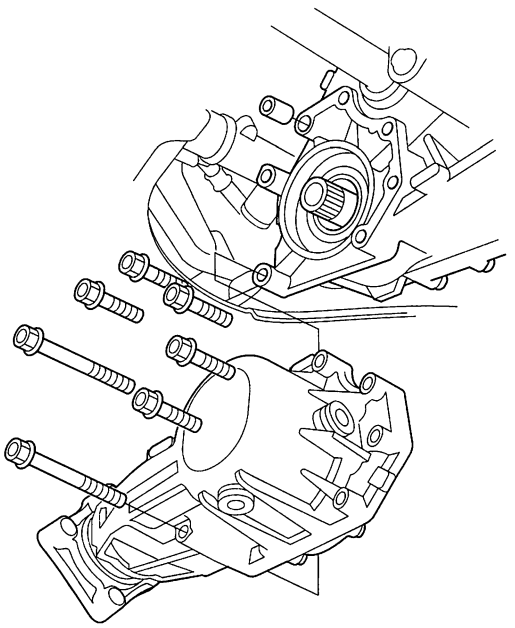



BACK

Protected by AR

## Transfer Assembly Installation

1. Clean the areas where the transfer assembly contacts the transmission with solvent or carburetor cleaner, and dry with compressed air. Then apply transmission fluid to the contact area.

2. Install the dowel pin (A) in the transmission, and install the transfer assembly (B) on the transmission.

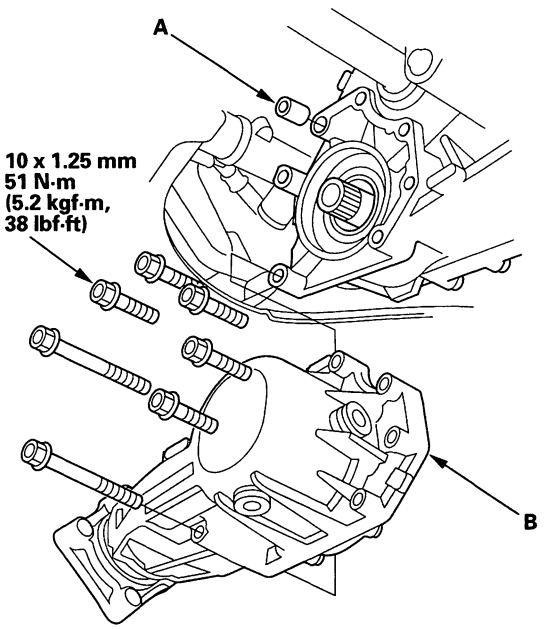


3. Install the propeller shaft (A) to the transfer companion flange (B) by aligning the reference mark (C).

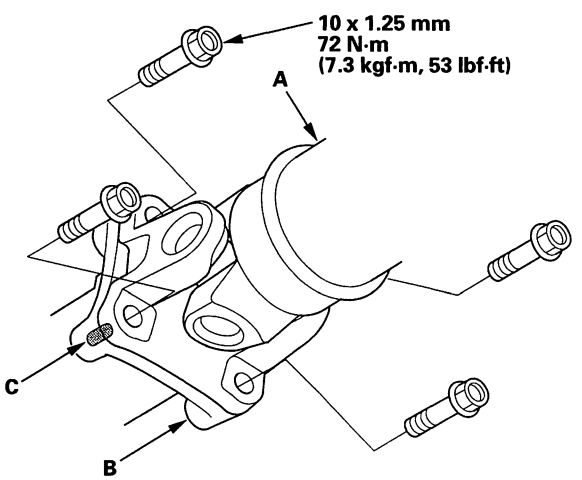


4. Secure the transfer breather hose bracket (A) on the transfer assembly with the bolt, and install the breather hose (B) over the breather pipe (C) with the dot (D) facing out.

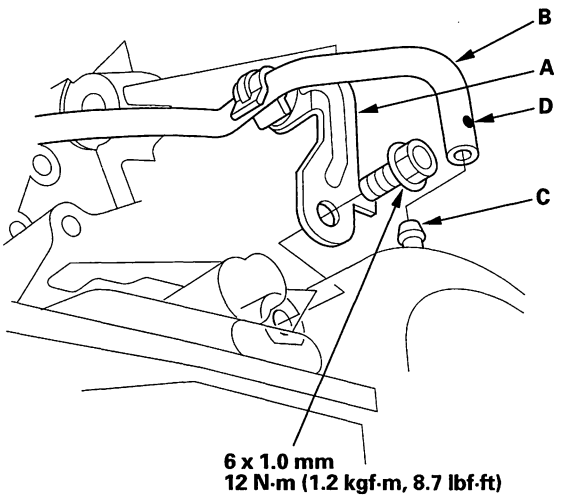


5. Install the three-way catalytic converter (A) with the new self-locking nuts and new gaskets (B) (C).

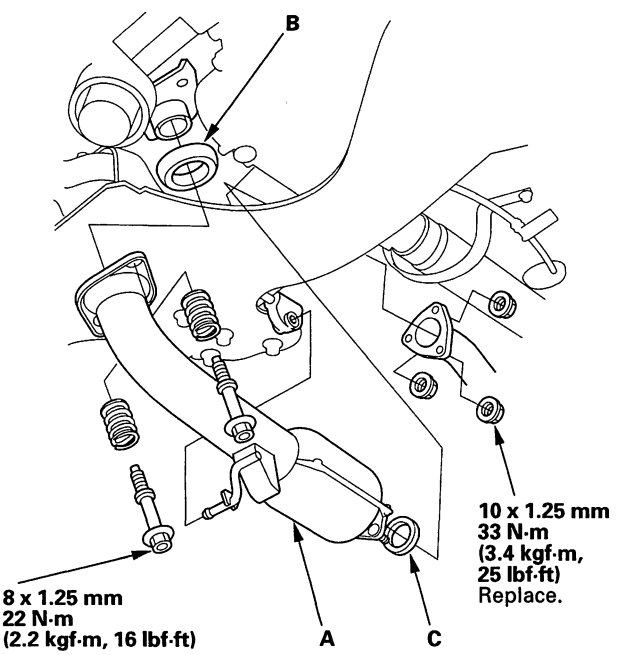


6. Refill the transfer assembly with transfer fluid (hypoid gear oil), if necessary (see page 14-241).

7. Refill the transmission with ATF (see step 5 on page 14-239).

Protected by AR



## Transfer Breather Hose Replacement

1. Raise the vehicle, and make sure it is supported securely.

2. Remove the transfer breather (A) from its bracket (B), and disconnect the breather hose (C) from the breather.

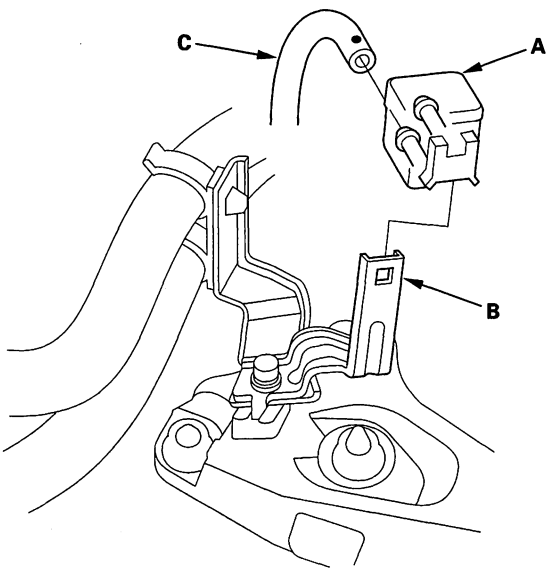


3. Remove the breather hose (A) from the hose clamp (B) (located near the ATF filler plug).

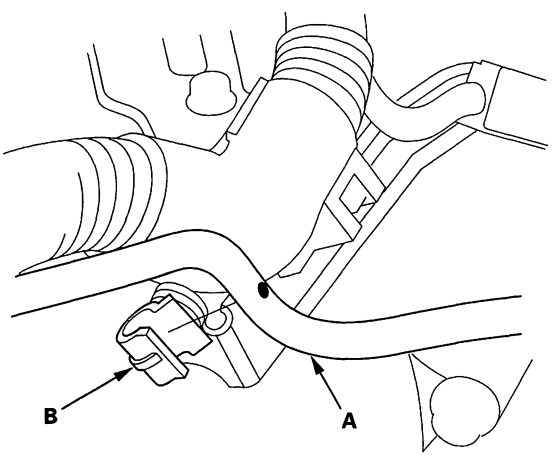


4. Disconnect the breather hose (A) from the transfer breather pipe (B), and remove the breather hose from the hose clips (C).

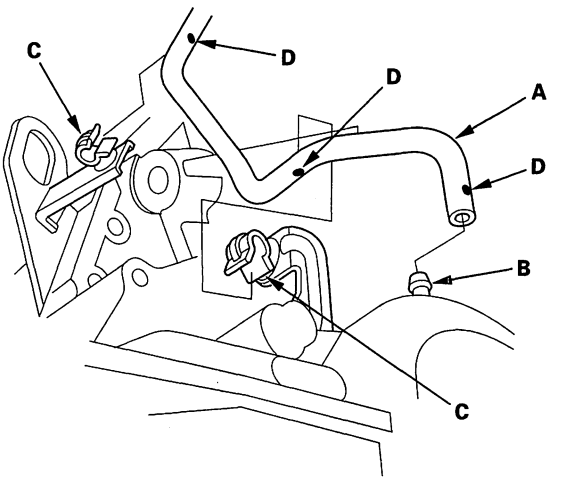


5. Install the breather hose over the breather pipe with the dot (D) facing out.

6. Align the other dots with the clips, then push the hose into the clips. Make sure the dots face out.

7. Connect the breather hose over the pipe of the breather with facing the dot up, and install the breather on its bracket.



BACK

Protected by AR

## Transmission Removal

**Special Tools Required**
- RDX engine support eyelet 07AAK-SNAA600
- Support bolt 07AAK-SNAA500
- RDX engine support mount pads 07AAK-STKA120
- Front subframe adapter VSB02C000016 *
- Engine support hanger, A and Reds AAR-T-12566 *

* These special tools are available through the American Honda Tool and Equipment Program 1-888-424-6857.

NOTE:
- Use fender covers to avoid damaging painted surfaces.
- Special tool engine hanger must be used with the side engine mount installed.

1. Make sure you have the anti-theft code for the audio system and navigation system (if equipped), then write down the audio presets.
2. Secure the hood in the wide open position with the support rod.
3. Make sure the ignition switch is OFF. Disconnect the negative terminal from the battery, then disconnect the positive terminal.
4. Remove the battery hold-down bracket, and remove the battery cover, battery, and battery tray.
5. Remove the battery base.
6. Remove the intercooler cover, air cleaner housing, and intake air duct.
7. Raise the vehicle, and make sure it is securely supported.
8. Remove the splash shield (see page 20-177).
9. Remove the drain plug (A), and drain the automatic transmission fluid (ATF).

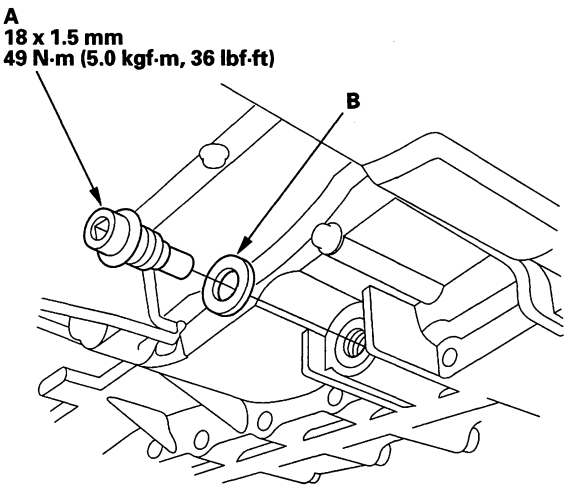


10. Reinstall the drain plug with a new sealing washer (B).
11. Disconnect the transmission range switch connector (A).

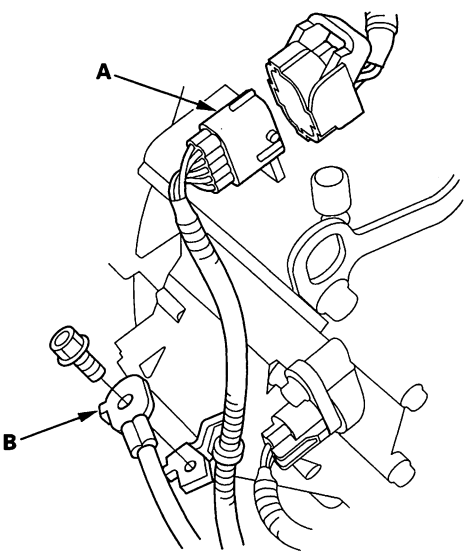


12. Remove the transmission ground cable terminals (B).

(cont'd)

Protected by AR



## Transmission Removal (cont'd)

13. Remove the nuts securing the shift cable bracket (A).

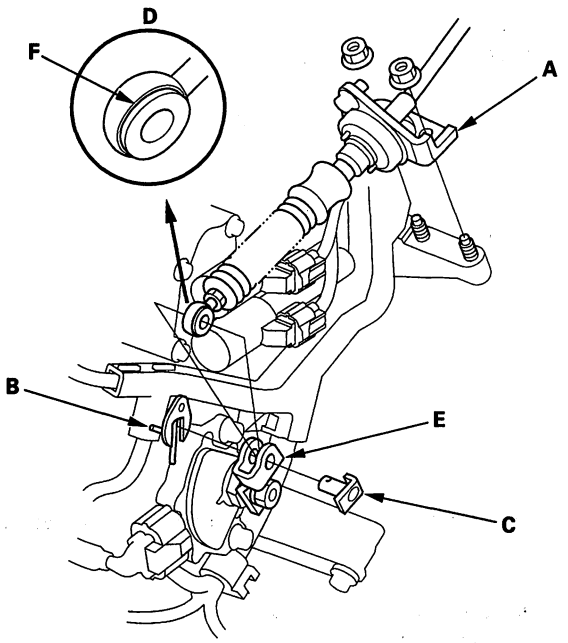


14. Remove the spring clip/washer (B) and control pin (C), then separate the shift cable end (D) from the control lever (E).

15. Check the synthetic resin bushing (F) in the shift cable end for a proper fit and wear. If the bushing is loose or worn, replace the shift cable (see page 14-282).

16. Disconnect the input shaft (mainshaft) speed sensor connector (A), output shaft (countershaft) speed sensor connector (B), 3rd clutch transmission fluid pressure switch connector (C), and ATF temperature sensor connector (D).

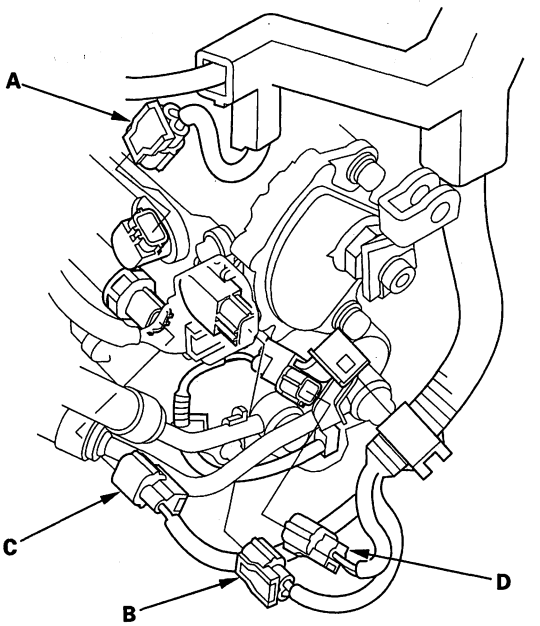


17. Disconnect the A/T clutch pressure control solenoid valve A connector (A), solenoid valve B connector (B), solenoid valve C connector (C), 4th clutch transmission fluid pressure switch connector (D), and shift solenoid harness connector (E).

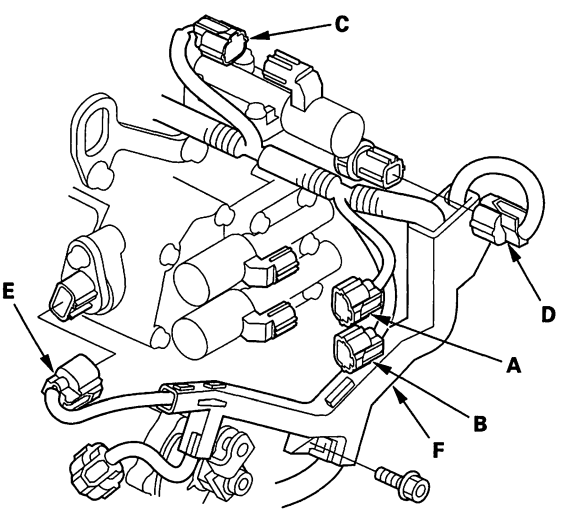


18. Remove the bolt securing the harness cover (F).



BACK

Protected by AR

19. Disconnect the ATF cooler hoses (A) from the ATF lines (B). Turn the end of the ATF cooler hoses up to prevent ATF from flowing out, then plug the hoses and lines.

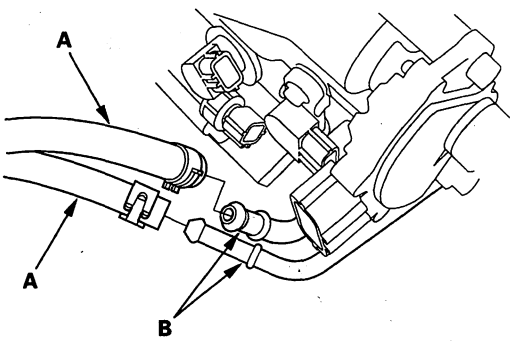


20. Remove the cooler by-pass hoses (A) from the clamps (B), and remove the bolt securing the clamp bracket (C).

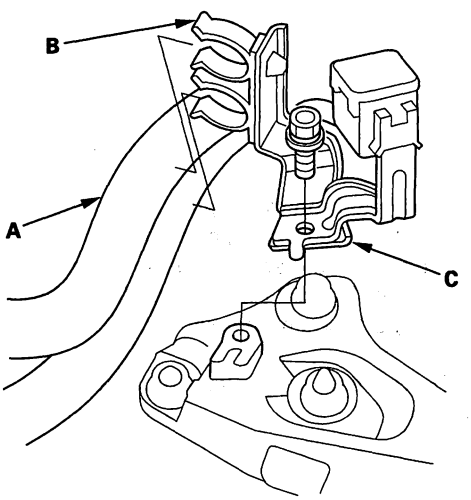


21. Remove the bolts securing the harness clamp/ junction box bracket from the transmission housing.

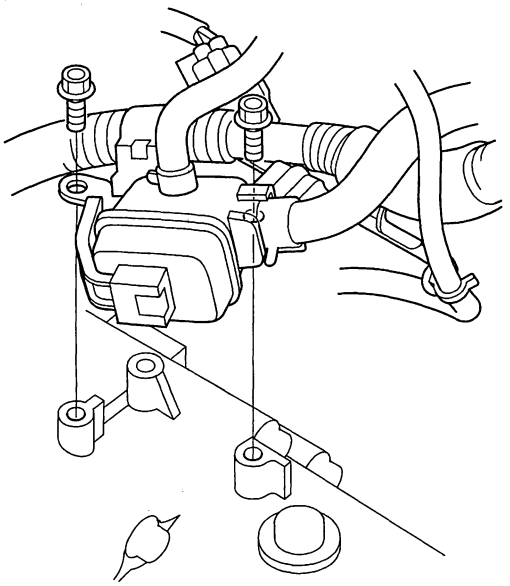

22. Remove the hose (A) from the clamp on the intake air duct, and remove the intake air duct (B).

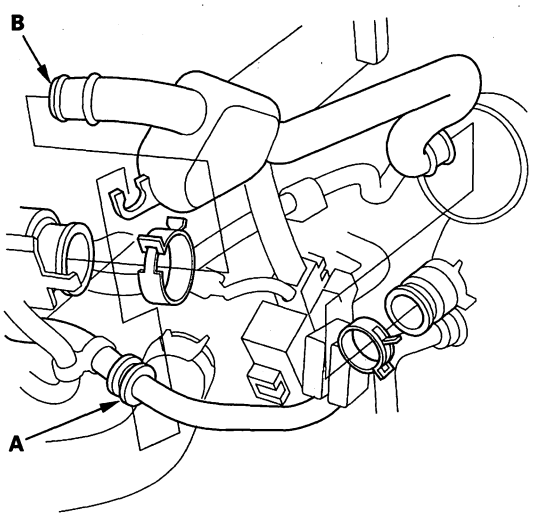


(cont'd)

Protected by AR



## Transmission Removal (cont'd)

23. Attach the engine support eyelet (07AAK-SNAA600) to the cylinder head with the support bolt (07AAK-SNAA500). Tighten the bolt by hand.

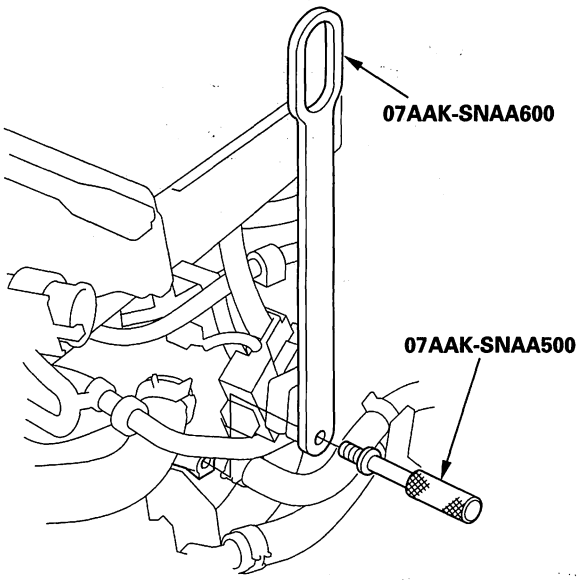


24. Remove the top corner clip (A) from the front grille on both sides. Place the engine support mount pads (07AAK-STKA120) over the hood edge cushions (B), and align the pins with the clip hole (C).

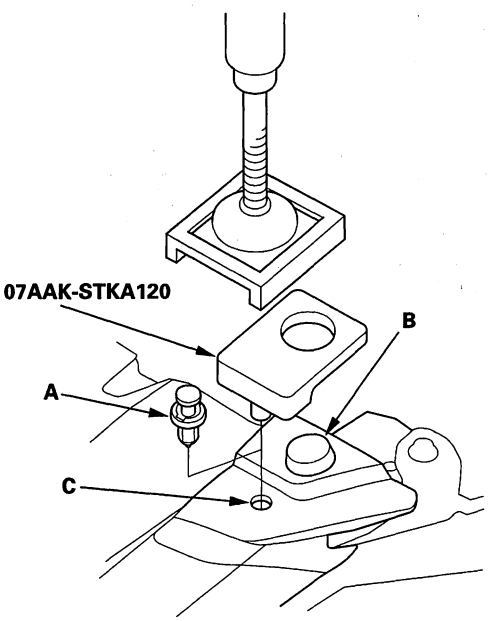


25. Remove both lids for the front damper flange nuts from the cowl cover. Use the adapter (A) between the cross arm foot (B) and body when positioning the engine support hanger.

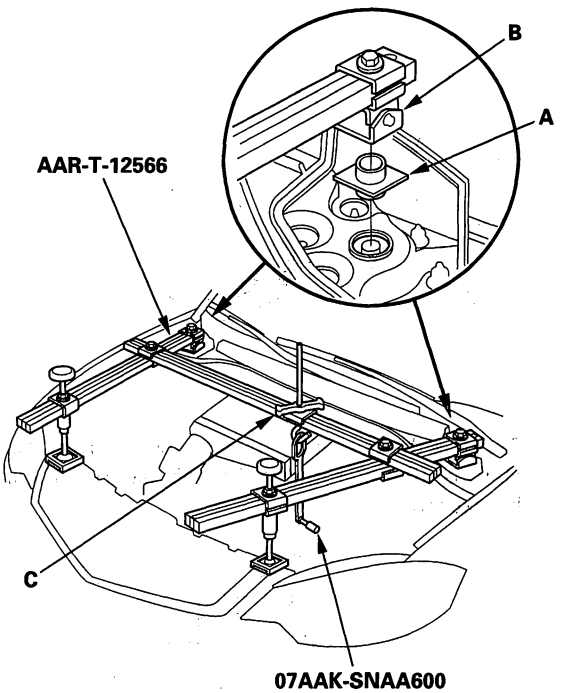


26. Carefully position the engine support hanger (AAR-T-12566) on the vehicle, and attach the hook to the slotted hole in the engine support eyelet (07AAK-SNAA600). Tighten the wingnut (C) by hand to lift and support the engine/transmission assembly.

NOTE: Use care when working around the windshield.



BACK

Protected by AR

27. Insert a 6 mm Allen wrench (A) in the top of the ball joint pin (B), and remove the nuts (C), then separate the stabilizer link (D) from the stabilizer (E).

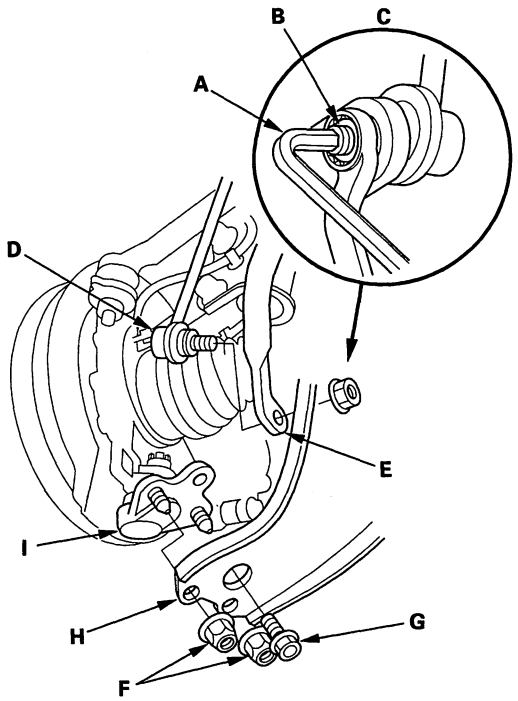


28. Remove the nuts (F) and bolt (G) securing the lower arm (H) and ball joint (I), and separate the lower arms from the ball joints.

29. Remove the three-way catalytic converter.

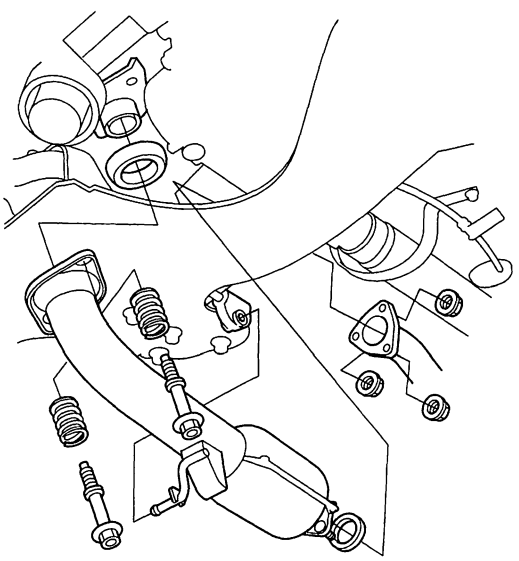

30. Remove the bolt securing the transfer breather hose bracket (A), and disconnect the breather hose (B) from the breather pipe (C) on the transfer assembly.

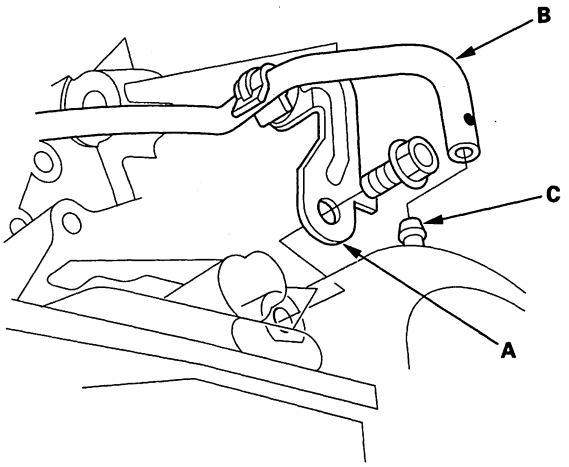


31. Make a reference mark (A) across the propeller shaft (B) and the transfer companion flange (C).

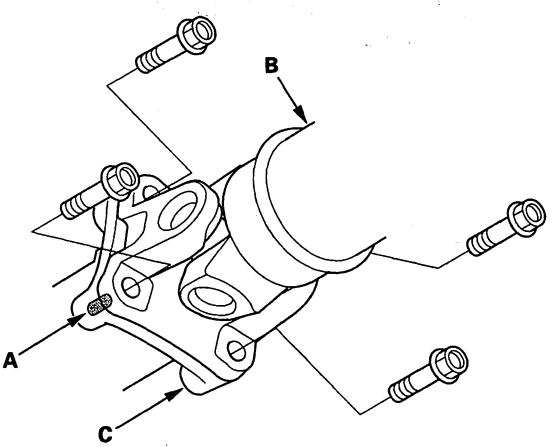


32. Separate the propeller shaft from the transfer companion flange.

(cont'd)

Protected by AR



## Transmission Removal (cont'd)

33. Remove the bolts securing the ATF cooler line at the front of the subframe.

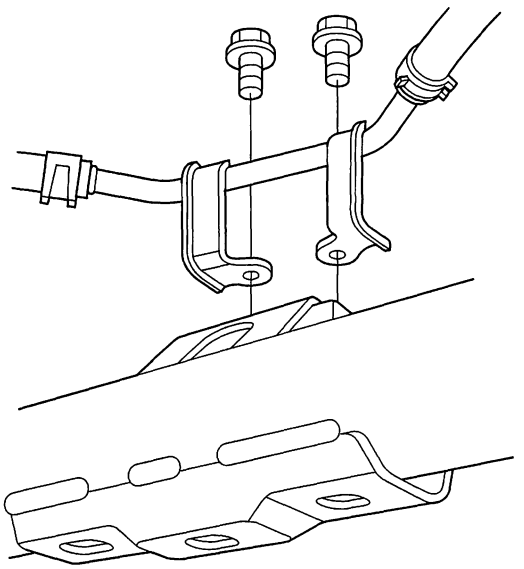

34. Remove the torque converter cover (A), and remove the drive plate bolts (B) (8) while rotating the crankshaft pulley.

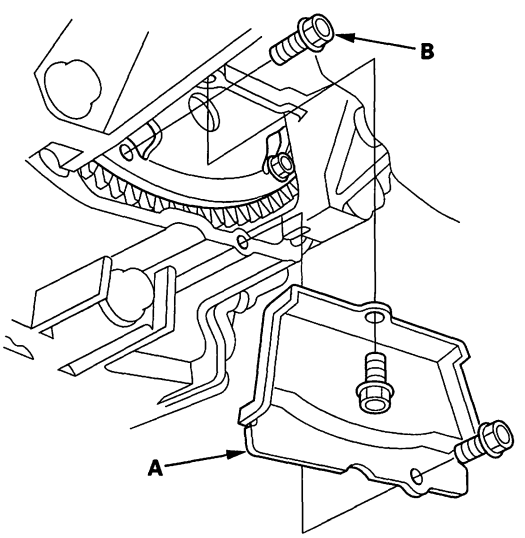


35. Remove the bolt securing the power steering fluid line clamp bracket at the right front of the subframe.

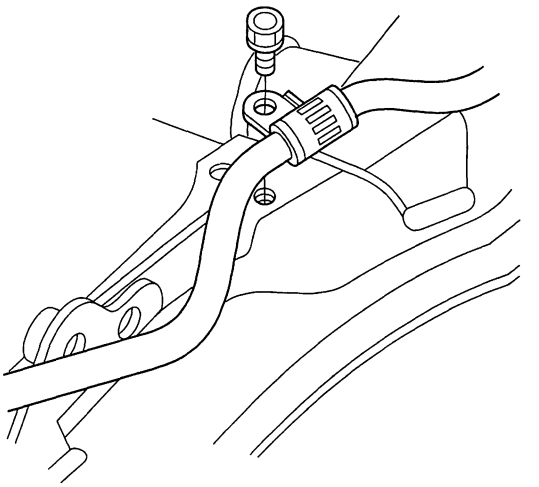

36. Remove the power steering fluid hose from the hose clamps.

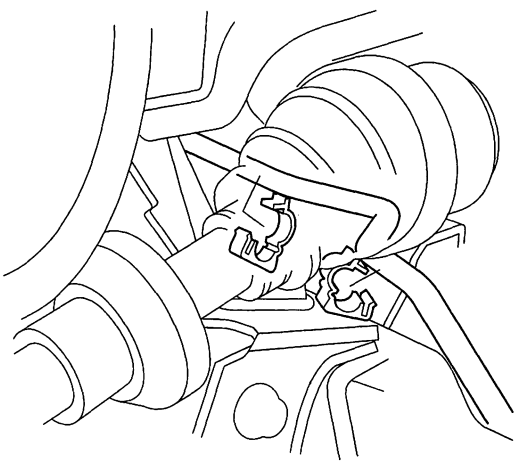



BACK

Protected by AR

37. Remove the steering gearbox bracket mounting bolts.

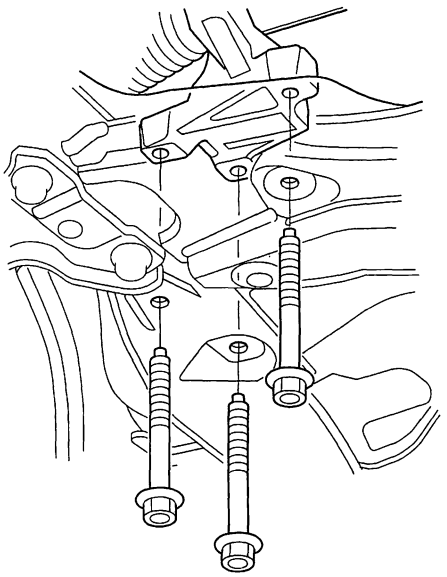

38. Remove the steering gearbox bracket mounting bolts.

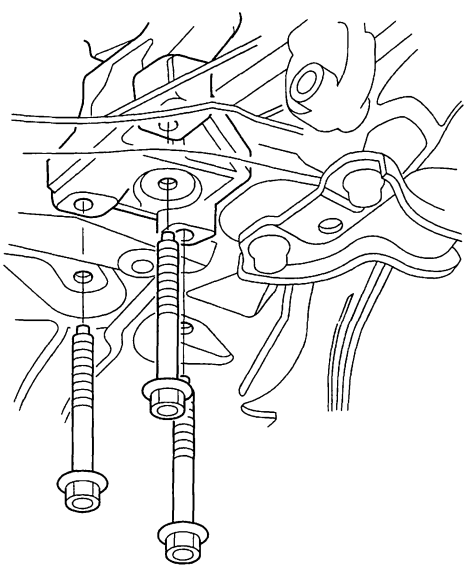

39. Remove both steering gearbox stiffener mounting bolts.

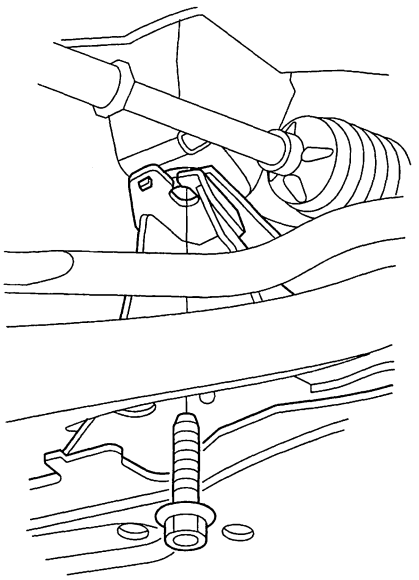

40. Place a jack under the engine, raise it just enough to take it off of the mount, and remove the lower torque rod bolts.

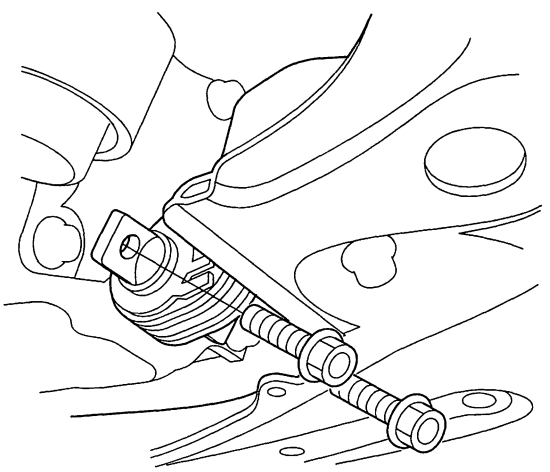

41. Remove the jack.

(cont'd)

BACK

Protected by AR



## Transmission Removal (cont'd)

42. Remove the propeller shaft protector.

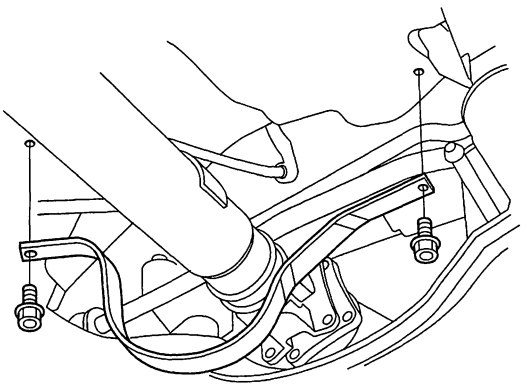

43. Make reference marks on the body across the marks (A) (B) on the edge of the subframe.

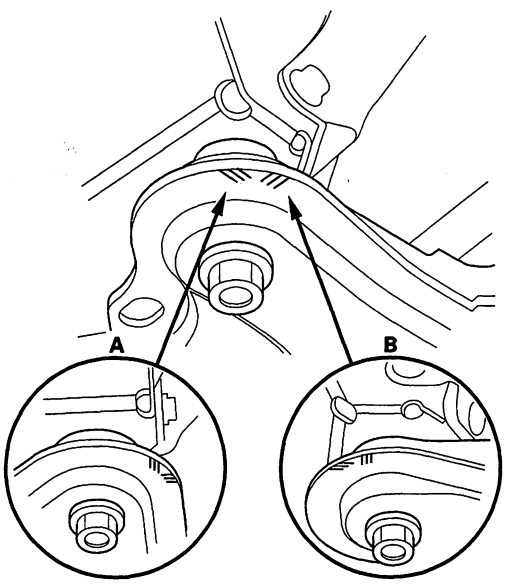


44. Attach the front subframe adapter (VSB02C000016) to the subframe by looping the strap over the front of the subframe, then secure the strap.

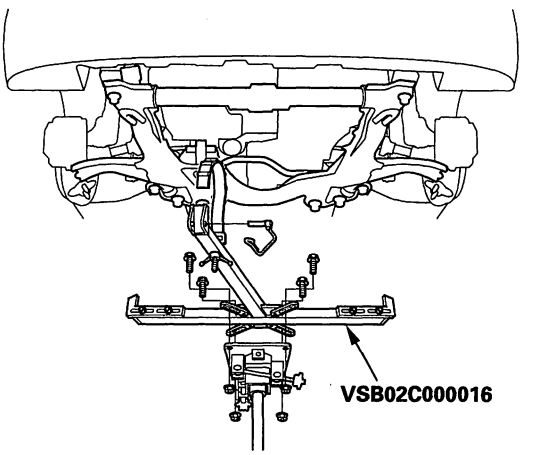


45. Raise the jack and line up the slots in the arms with the bolt holes on the corner of the jack base, then tighten the bolts.

46. Remove the lower arm bracket mounting bolts (A).

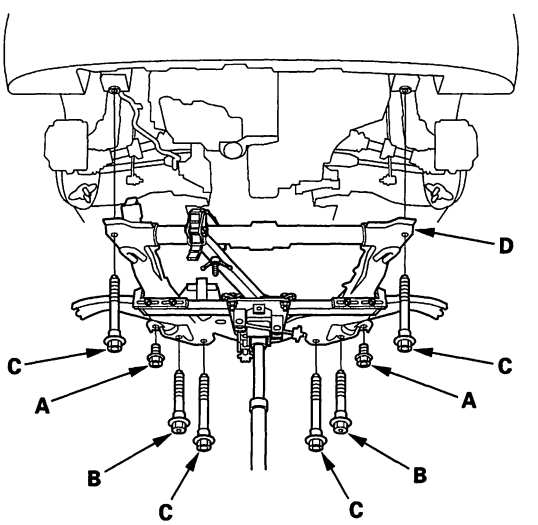


47. Remove the six bolts (B) (C) securing the front subframe (D), and lower the subframe.

48. Hang the steering gearbox to the body with a strap.



BACK

Protected by AR

49. Disconnect the 2nd clutch transmission fluid pressure switch connector.

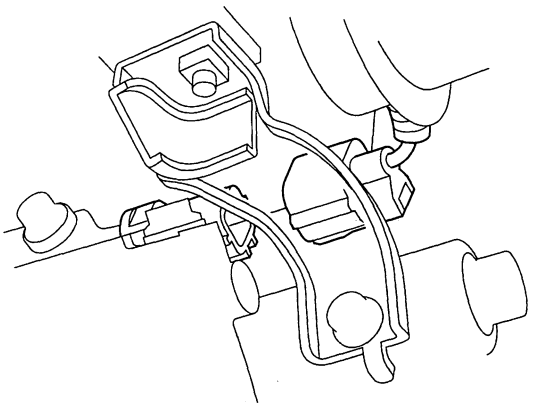

50. Remove the driveshafts from the differential and intermediate shaft.

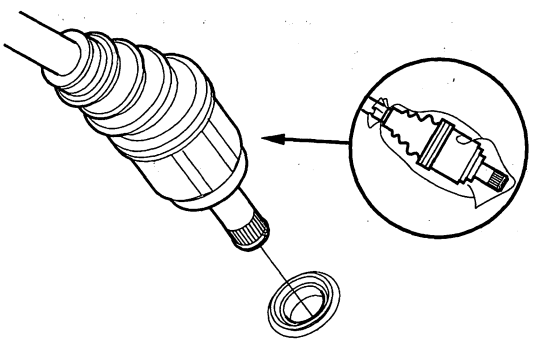

51. Remove the intermediate shaft heat shield (A).

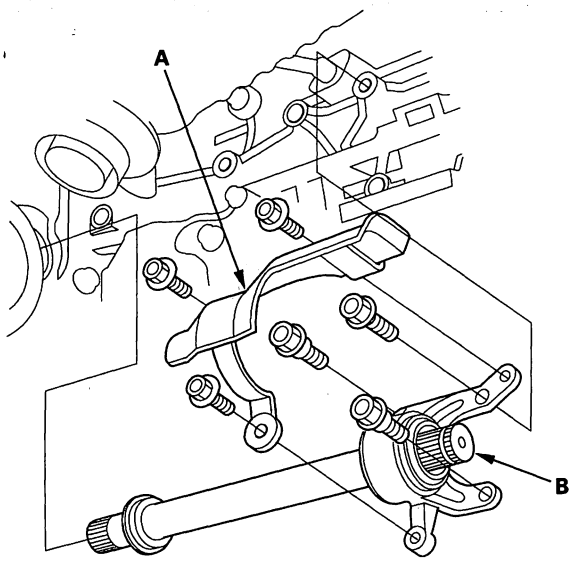


52. Remove the intermediate shaft (B).

53. Coat all precision machined surfaces with clean engine oil, then put plastic bags over driveshaft ends and intermediate shaft ends.

54. Remove the upper transmission housing mounting bolts.

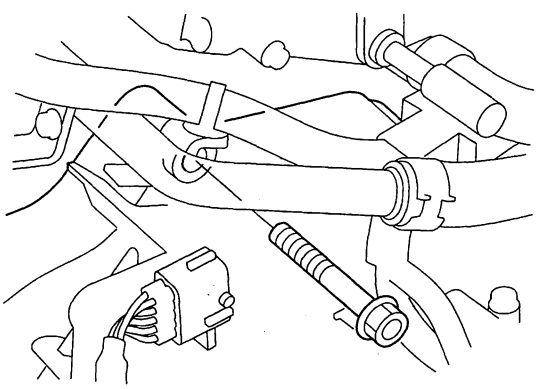

(cont'd)

Protected by AR



## Transmission Removal (cont'd)

55. Place a jack under the transmission, raise it just enough to take it off of the mount, and remove the transmission mount bracket bolt and nuts.

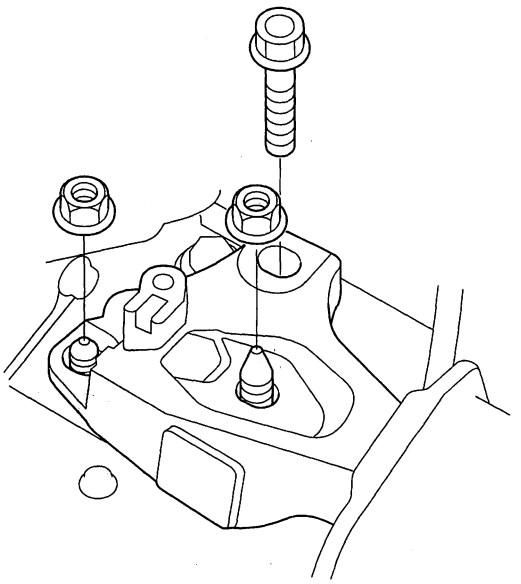

56. Remove the jack.

57. Remove the front transmission housing mounting bolts.

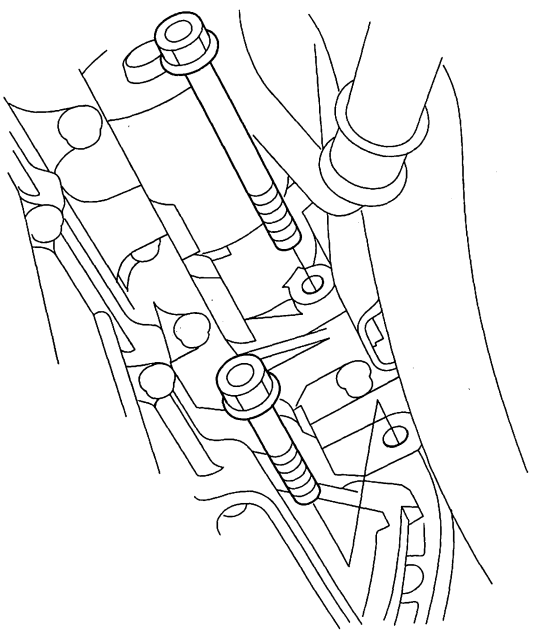

58. Remove the rear transmission housing mounting bolts.

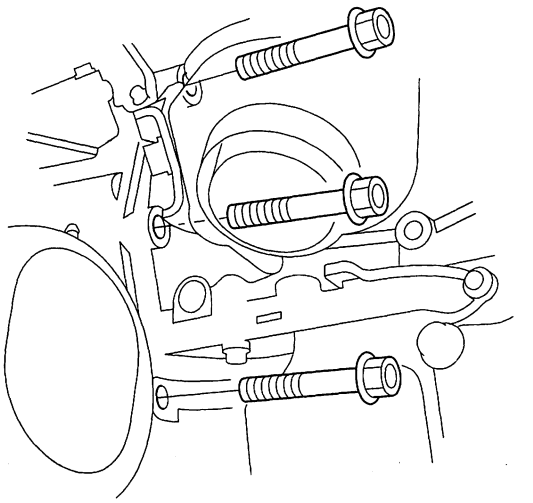

59. Lower the transmission by loosening the wing nut on the engine support hanger, and tilt the engine just enough for the transmission to clear the side frame.

60. Place a jack under the transmission.

61. Remove the lower transmission housing mounting bolts.

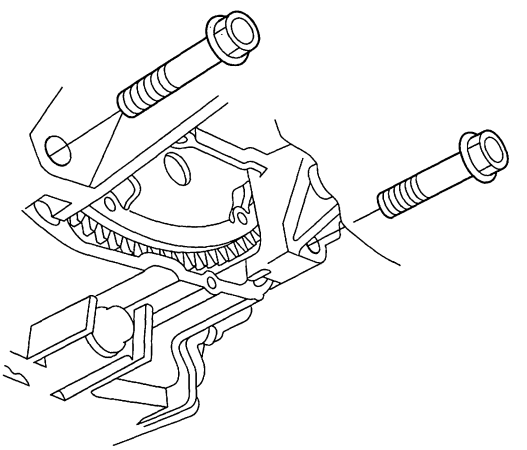

62. Slide the transmission away from the engine to remove it from the vehicle.



BACK

Protected by AR

63. Install the propeller shaft protector.

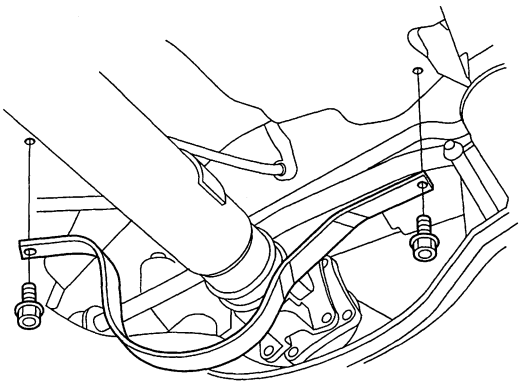

64. Remove the torque converter and dowel pins.

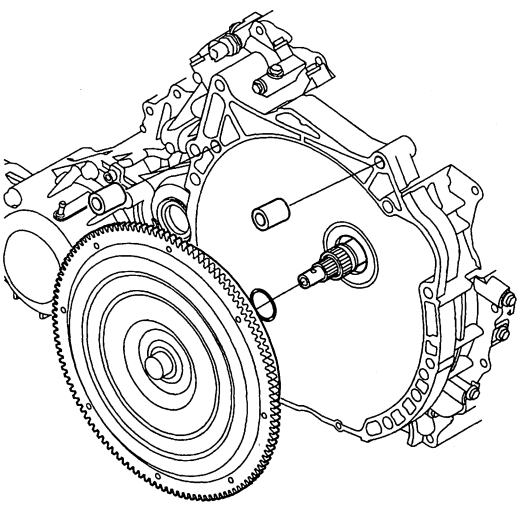

65. Inspect the drive plate, and replace it if it's damaged.

66. Remove the clamp bracket from the transmission.

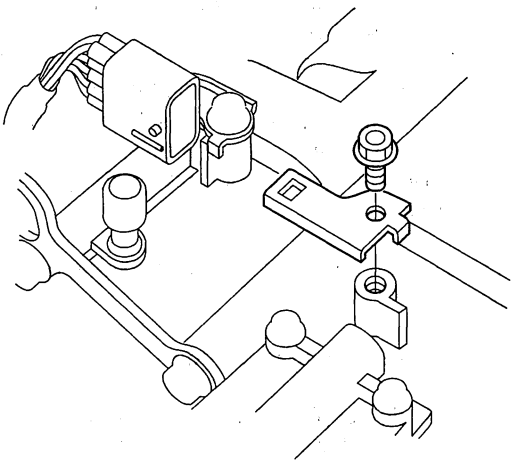

67. Remove the transfer assembly from the transmission.

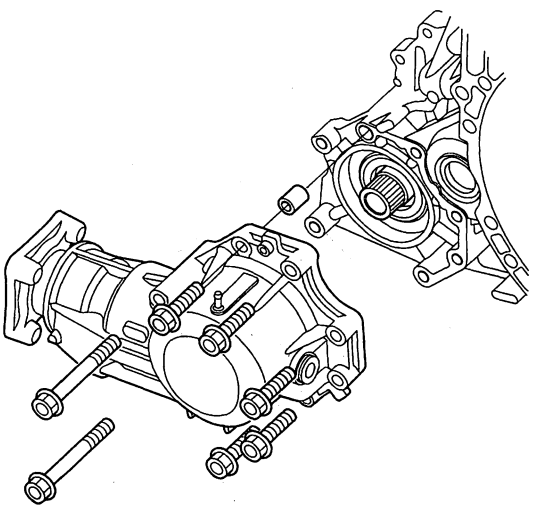

Protected by AR



## Transmission Installation

**Special Tools Required**
- RDX engine support eyelet 07AAK-SNAA600
- Support bolt 07AAK-SNAA500
- RDX engine support mount pads 07AAK-STKA120
- Front subframe adapter VSB02C000016 *
- Engine support hanger, A and Reds AAR-T-12566 *

* These special tools are available through the American Honda Tool and Equipment Program 1-888-424-6857.

NOTE: Use fender covers to avoid damaging painted surfaces.

1. Clean the ATF cooler (see page 14-271).

2. Install the dowel pin (A) in the transmission, and install the transfer assembly (B) on the transmission.

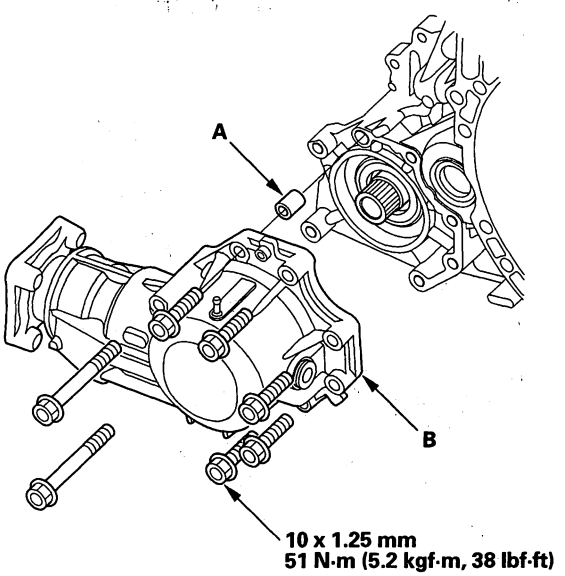


3. Install the clamp bracket.

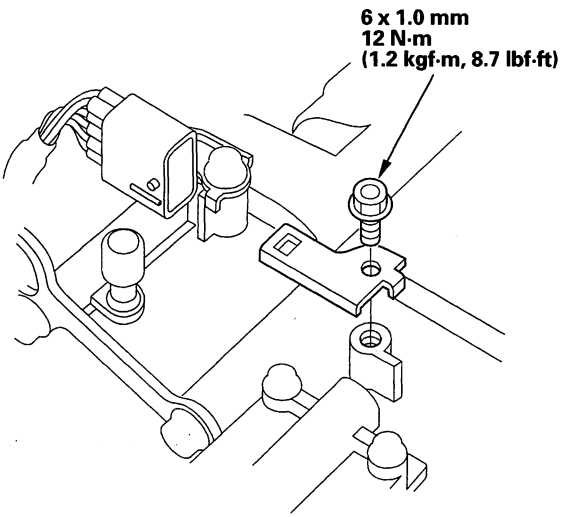


4. Install the torque converter (A) on the mainshaft (B) with the new O-ring (C).

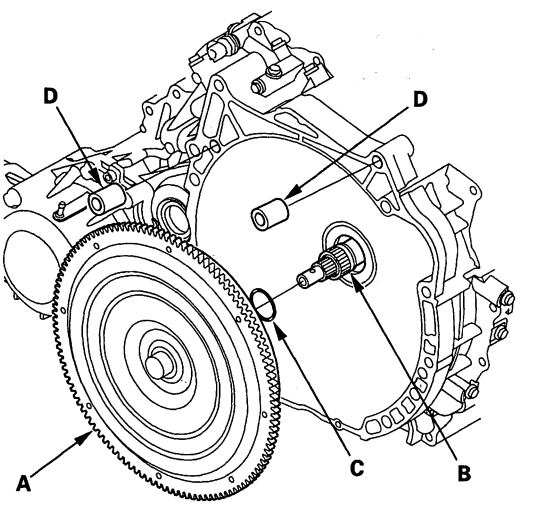


5. Install the 14 x 20 mm dowel pins (D) in the torque converter housing.

6. Place the transmission on the jack, and raise the transmission to the engine level.



BACK

Protected by AR

7. Attach the transmission to the engine, and install the lower transmission housing mounting bolt, and tighten the bolts.

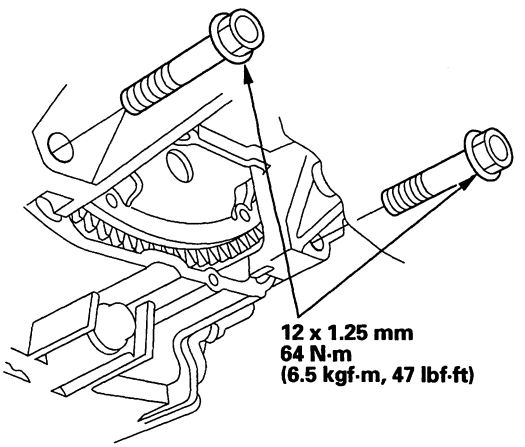


8. Install the rear transmission housing mounting bolts.

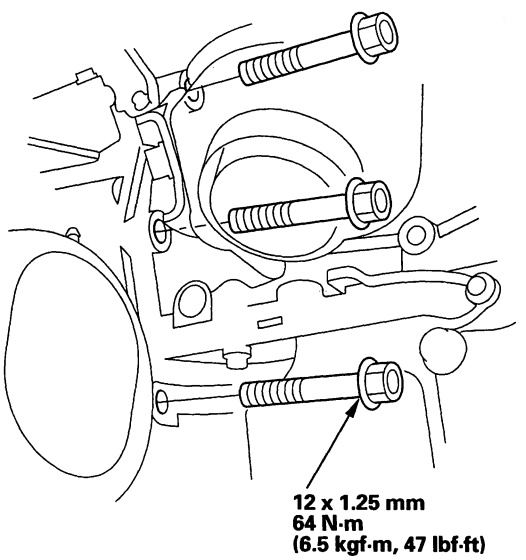


9. Install the front transmission housing mounting bolts.

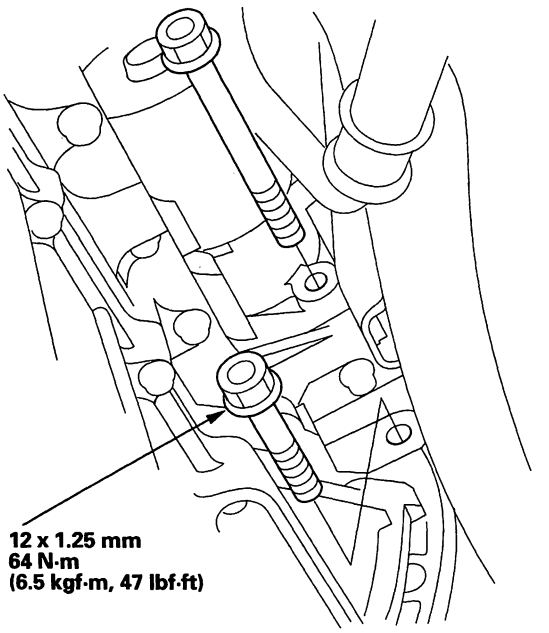


10. Install the upper transmission housing mounting bolt.

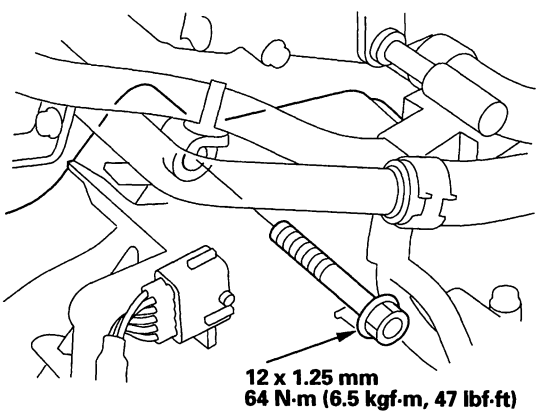


(cont'd)

Protected by AR



## Transmission Installation (cont'd)

11. Secure the transmission mount bracket on the transmission housing with the nuts and the new mounting bolt.

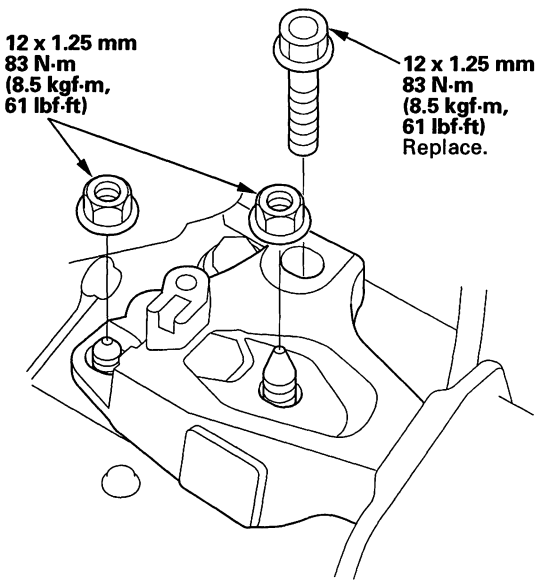


12. Install the new set ring (A) on the intermediate shaft (B).

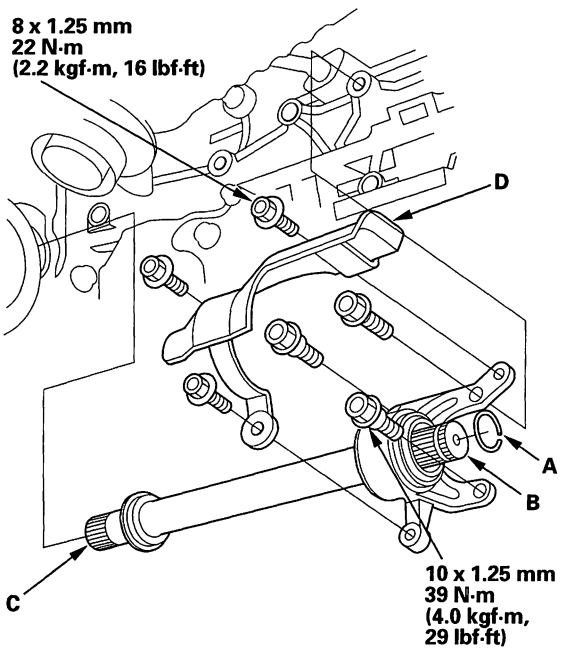


13. Clean the areas where the intermediate shaft contacts the transmission (differential) with solvent, and dry with compressed air. Apply ATF to intermediate shaft splines (C), then install the intermediate shaft, be sure not to allow dust or other foreign particles to enter the transmission.

14. Install the intermediate shaft heat shield (D).



BACK

Protected by AR

15. Install the new set ring (A) on the left driveshaft (B).

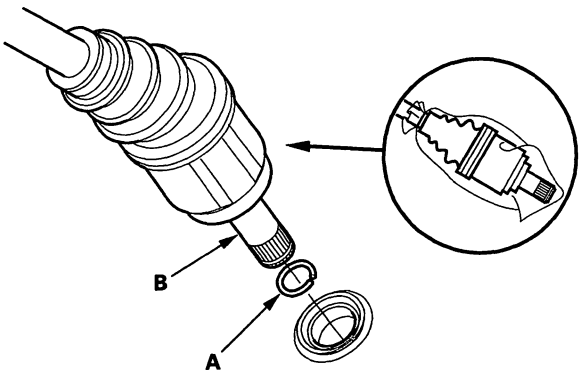


16. Clean the areas where the left driveshaft contacts the transmission (differential) with solvent, and dry with compressed air. Then install the left driveshaft, be sure not to allow dust or other foreign particles to enter the transmission. Turn the steering knuckle fully outward, and slide the driveshaft into the differential until you feel its set ring fully engage the side gear.

17. Apply the recommended grease to the right driveshaft inboard-joint splines.

18. Slide the right driveshaft over the intermediate shaft splines until you feel the driveshaft fully engage the intermediate shaft set ring.

19. Remove the propeller shaft protector.

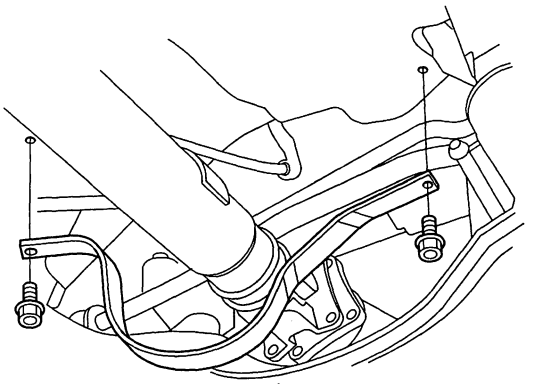

20. Connect the 2nd clutch transmission fluid pressure switch connector.

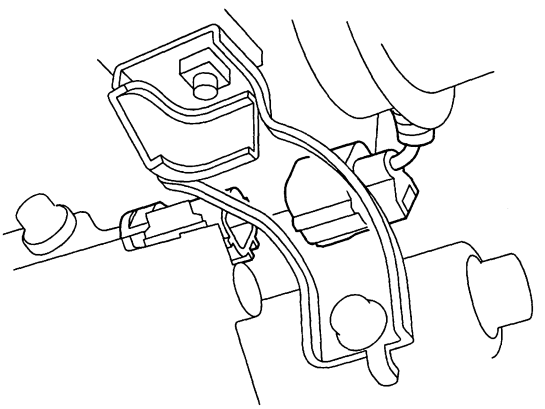

(cont'd)

Protected by AR



## Transmission Installation (cont'd)

21. Support the front subframe with the front subframe adapter (VSB02C000016) and a jack.

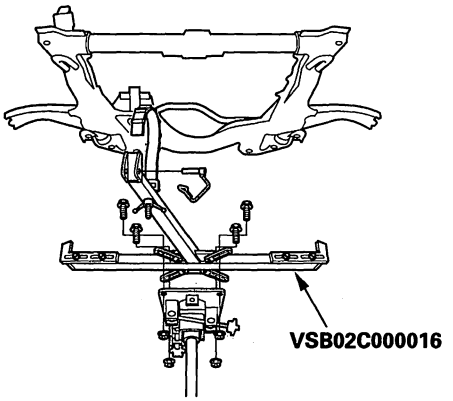


22. Lift the subframe up to the body while aligning the steering gearbox stiffener tab (A) in the subframe, and loosely install the mounting bolts.

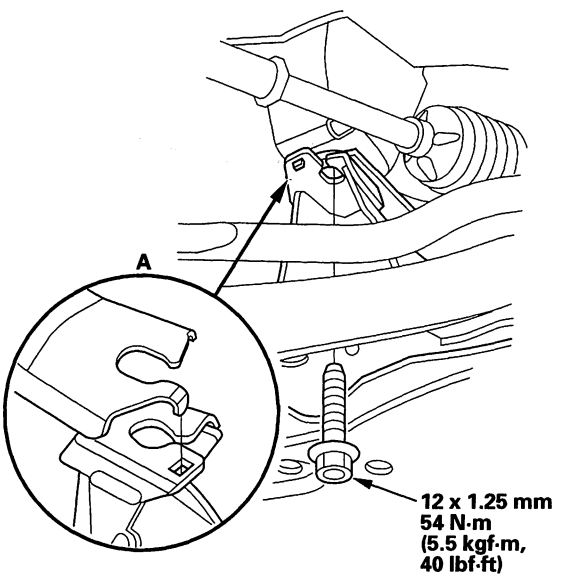


23. Loosely install the new subframe mounting bolts (A), and new lower arm bracket mounting bolts (B).

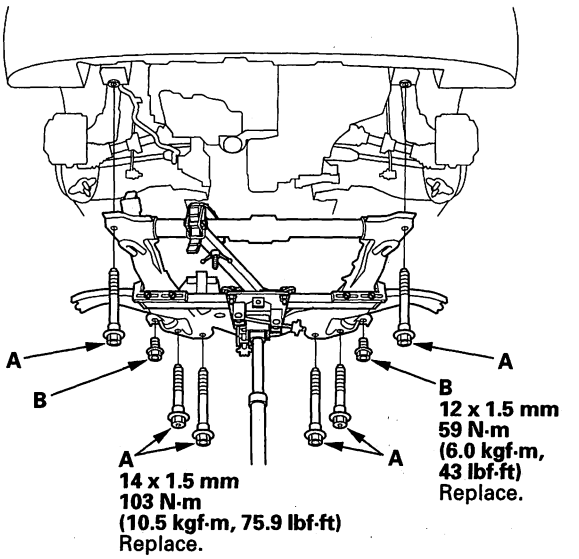


24. Align all reference marks (A) on the front subframe (B) with the body, then tighten the mounting bolts on the subframe to the specified torque.

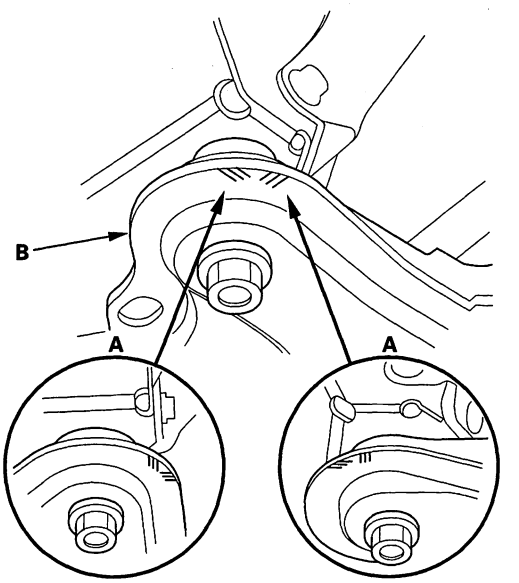




BACK

Protected by AR

25. Secure the lower torque rod with the new bolts.

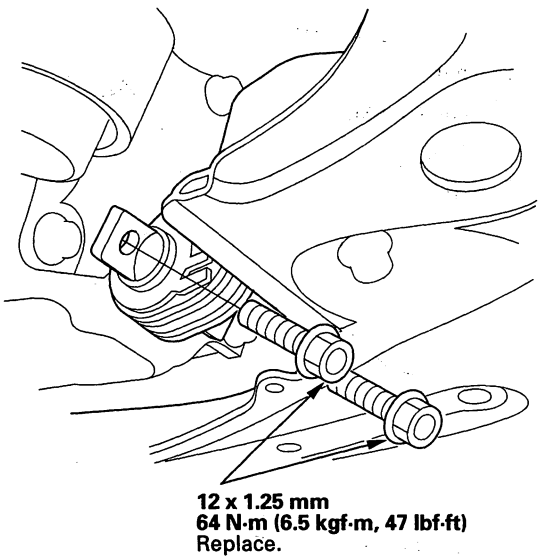


26. Install the propeller shaft protector.

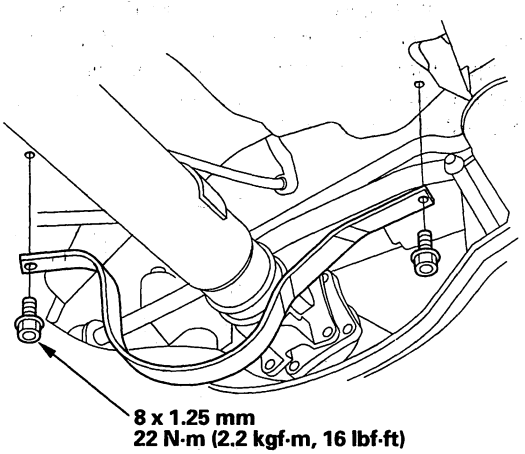


27. Loosely install the steering gearbox bracket bolts.

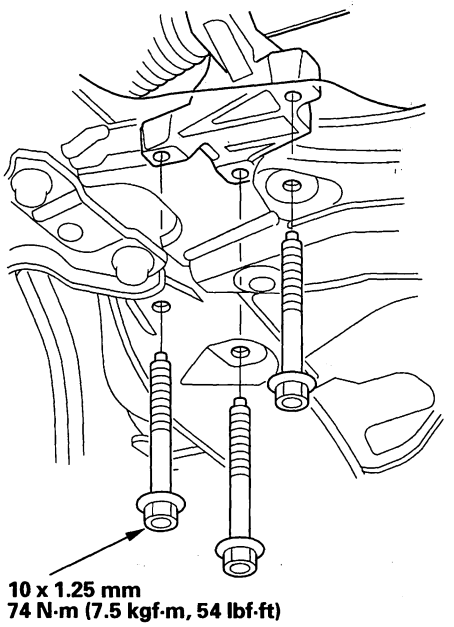


28. Loosely install the steering gearbox bracket bolts.

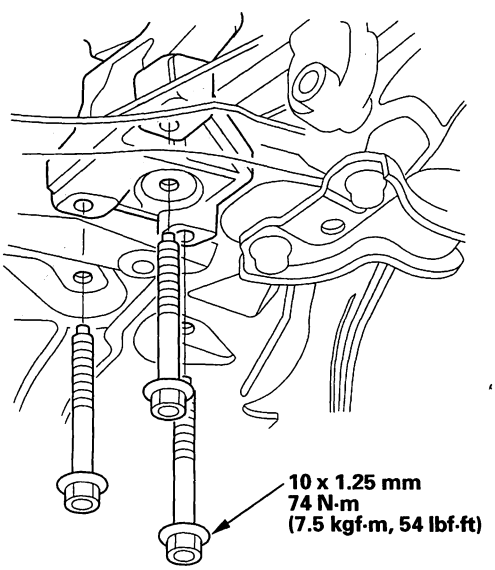


29. Secure the steering gearbox bracket with tightening the bolts to the specified torque.

(cont'd)

Protected by AR



## Transmission Installation (cont'd)

30. Secure the power steering fluid line clamp bracket with the bolt.

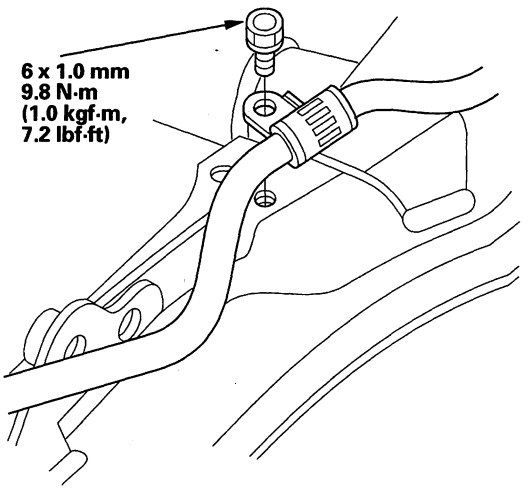


31. Secure the power steering fluid hose with the hose clamps.

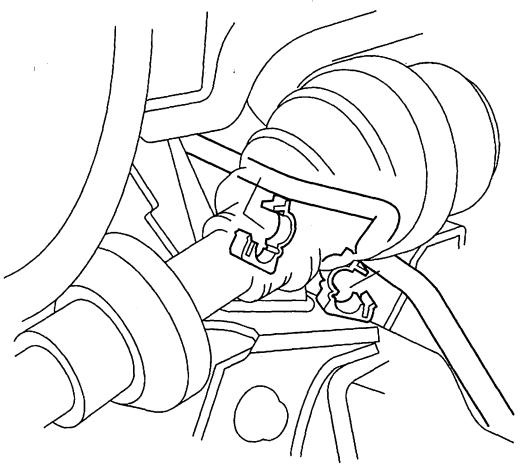

32. Secure the ATF cooler line with the bolts.

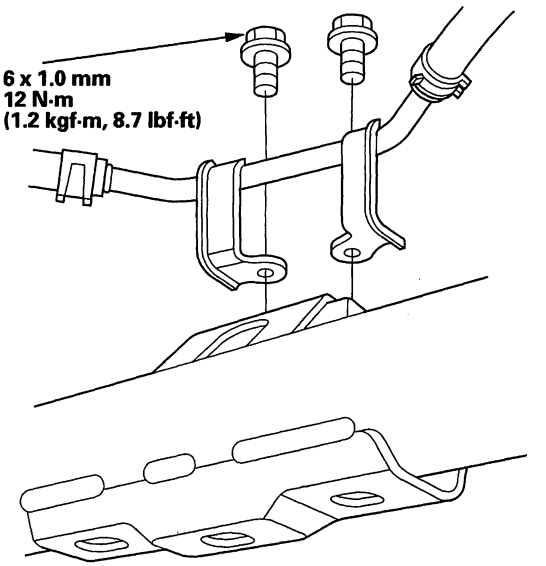


33. Attach the torque converter to the drive plate with eight bolts (A). Rotate the crankshaft pulley as necessary to tighten the bolts to 1/2 of the specified torque, then to the final torque, in a crisscross pattern. After tightening the last bolt, check that the crankshaft rotate freely.

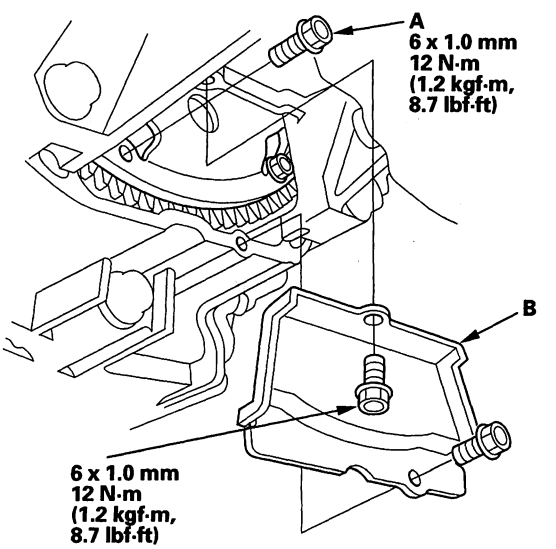


34. Install the torque converter cover (B).



BACK

Protected by AR

35. Install both lower arms (A) to both ball joints (B), and loosely install the new mounting nuts and bolts.

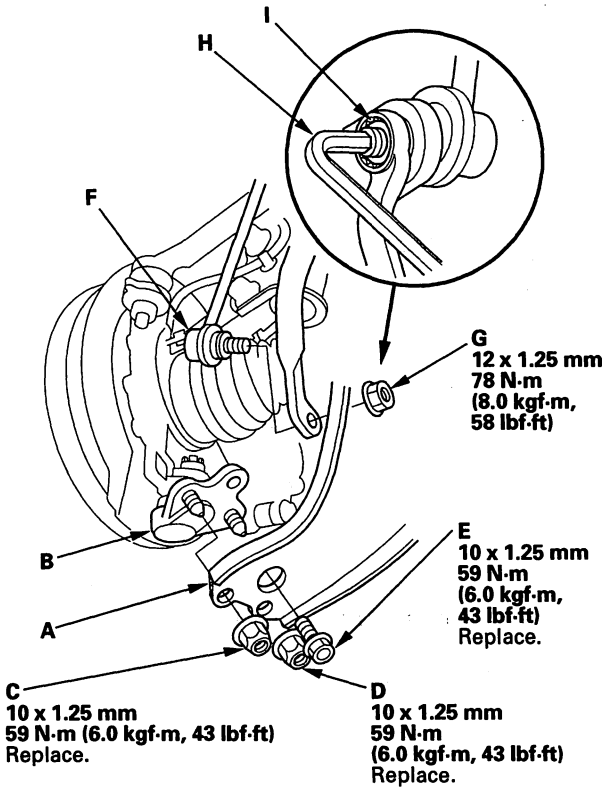


36. Tighten the nuts and bolts to 59 N·m (6.0 kgf·m, 43 lbf·ft) in the following order; the nut on the front (C), the nut on the rear (D), then the bolt (E).

37. Install the stabilizer links (F) to the stabilizer, and install the nuts (G). Insert a 6 mm Allen wrench (H) in the ball joint pin (I), and tighten the nuts.

38. Install the propeller shaft (A) to the transfer companion flange (B) by aligning the reference mark (C).

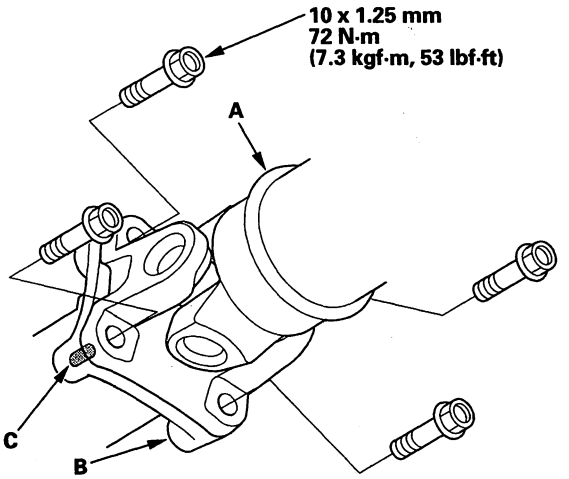


39. Secure the transfer breather hose bracket (A) on the transfer assembly with the bolt, and install the breather hose (B) over the breather pipe (C) with the dot (D) facing out.

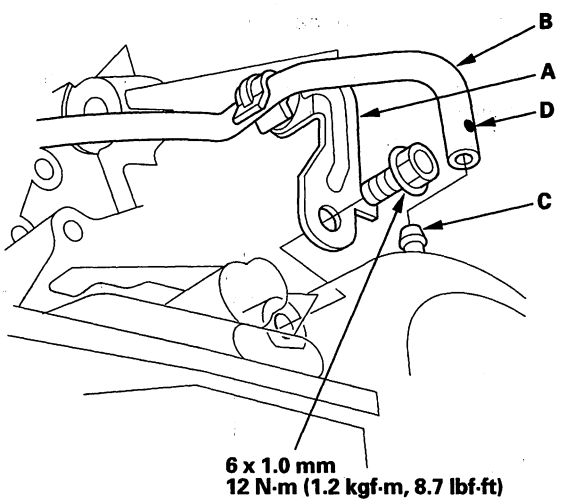


(cont'd)

Protected by AR



## Transmission Installation (cont'd)

40. Install the three-way catalytic converter (A) with the new self-locking nuts and new gaskets (B) (C).

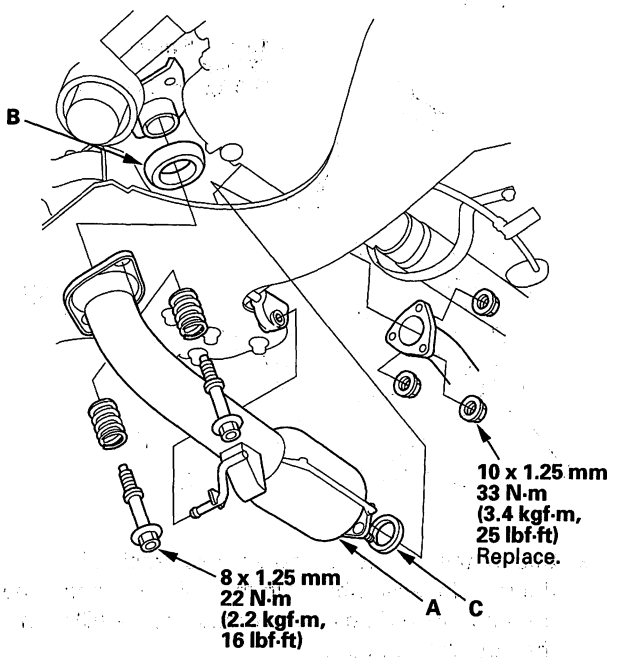


41. Remove the engine support hanger and support mount pads from the vehicle.

42. Remove the support bolt (07AAK-SNAA500) and engine support eyelet (07AAK-SNAA600) from the cylinder head.

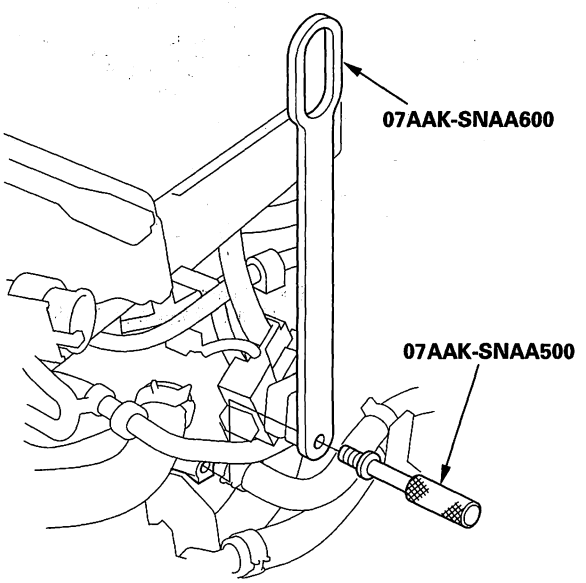


43. Install the intake air duct (A), and secure it with the clips (B). Install the hose (C) in the clamp (D) on the intake air duct.

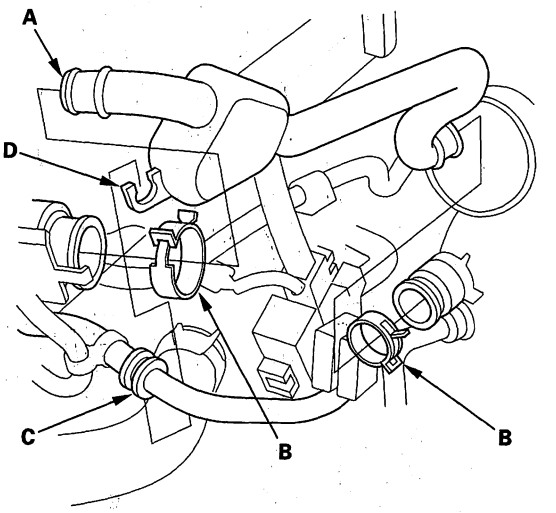


44. Secure the harness clamp/ junction box bracket on the transmission housing with the bolts.

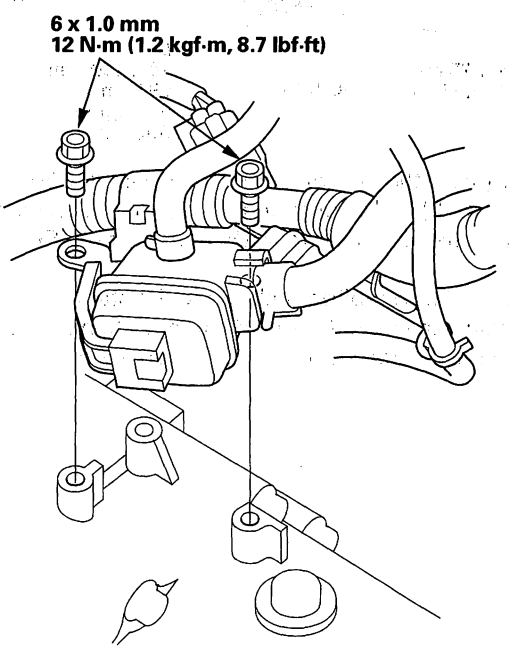




BACK

Protected by AR

45. Secure the clamp bracket (A) with the bolt, and install the coolant by-pass hoses (B) in the clamps (C).

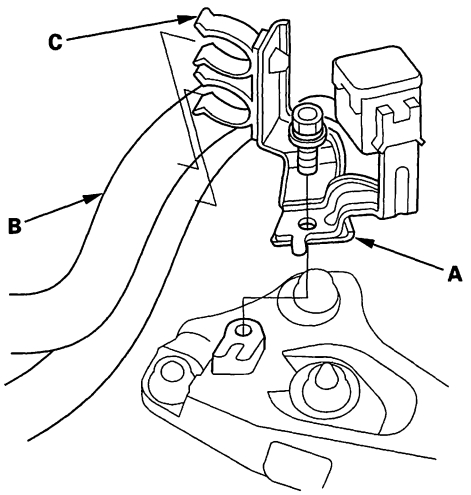


46. Connect the ATF cooler hoses (A) to the ATF cooler lines (B), and secure the hoses with the clips (C) (see page 14-273).

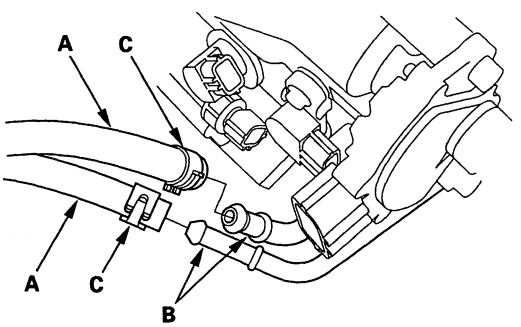


47. Connect the input shaft (mainshaft) speed sensor connector (A), output shaft (countershaft) speed sensor connector (B), 3rd clutch transmission fluid pressure switch connector (C), and ATF temperature sensor connector (D).

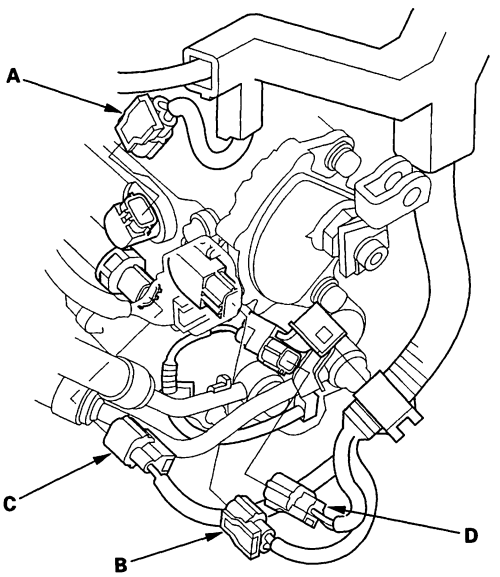


48. Connect the A/T clutch pressure control solenoid valve A connector (A), solenoid valve B connector (B), solenoid valve C connector (C), 4th clutch transmission fluid pressure switch connector (D), and shift solenoid harness connector (E).

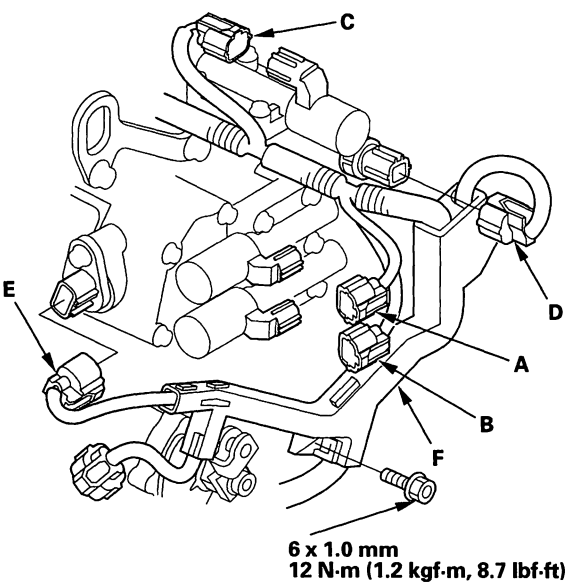


49. Secure the harness cover (F) with the bolt.

(cont'd)

Protected by AR



## Transmission Installation (cont'd)

50. Apply molybdenum grease to the bore hole of the synthetic resin bushing (A) in the shift cable end (B), and attach the shift cable end to the control lever (C), then insert the control pin (D) into the control lever hole through the shift cable end, and secure the control pin with the spring clip/washer (E).

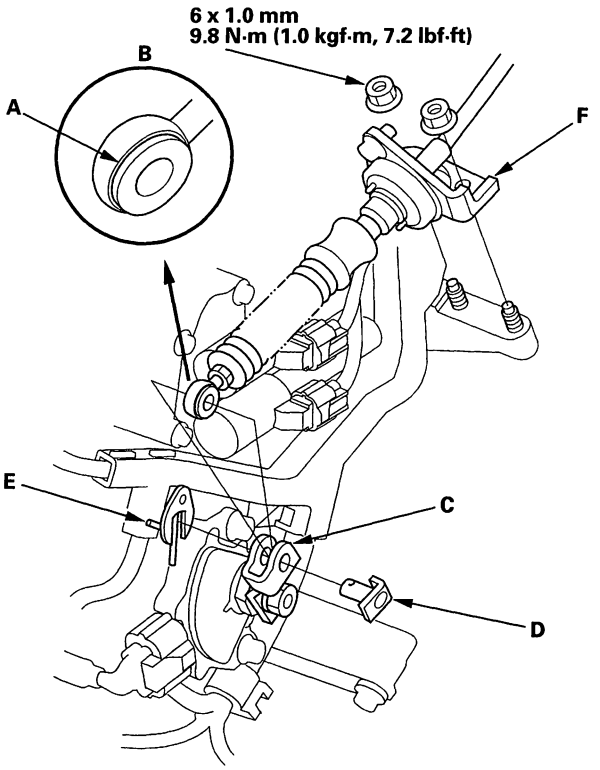


51. Secure the shift cable bracket (F) with the nuts.

52. Connect the transmission range switch connector (A), and install the transmission ground cable terminal (B).

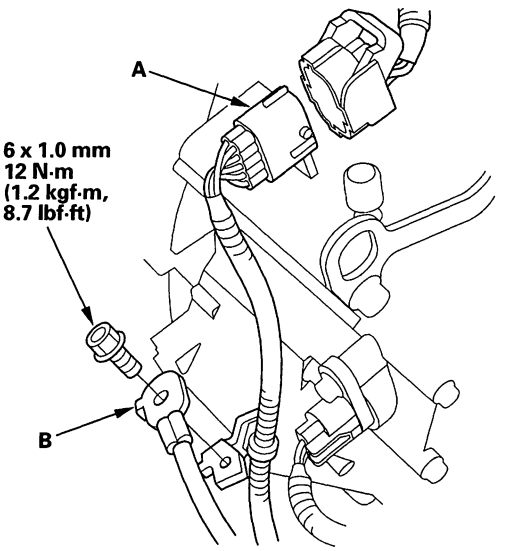


53. Refill the transmission with ATF (see step 5 on page 14-239).

54. Install the intake air duct, air cleaner housing, intercooler cover, and the front grille clips.

55. Install the battery base.

56. Install the battery tray, battery, battery cover, and battery hold-down bracket, then connect battery terminals.

57. Set the parking brake. Start the engine, and shift the transmission through all positions three times.

58. Check the shift lever operation, A/T gear position indicator operation, and shift cable adjustment.

59. Check and adjust the front wheel alignment (see page 18-5).

60. Install the splash shield.

61. Start the engine in the P or N position, and warm it up to normal operating temperature (the radiator fan comes on). Turn off the engine, and check the ATF level (see page 14-238).



BACK

Protected by AR

62. Enter the audio system and navigation system (if equipped) anti-theft codes, then enter the audio presets, and set the clock.

63. Do the power window control unit reset procedure (see page 22-213).

64. Do the road test (see page 14-209).

65. After the road test, raise the vehicle on a hoist, and make sure it is securely supported.

66. Loosen the upper torque rod bolt (A).

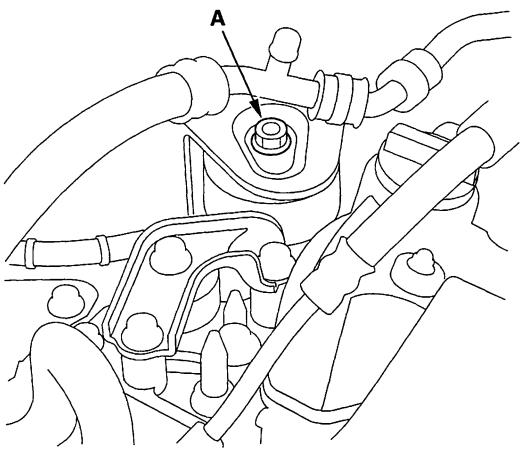


67. Loosen the transmission mount bracket bolt (A) and nuts (B), then retighten them to the specified torque.

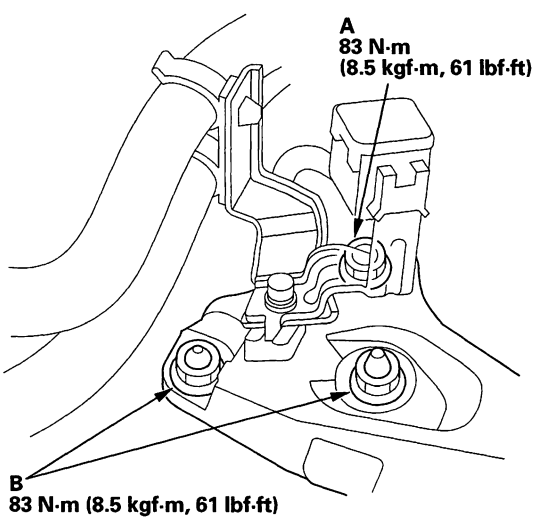


68. Loosen the lower torque rod bolt (A).

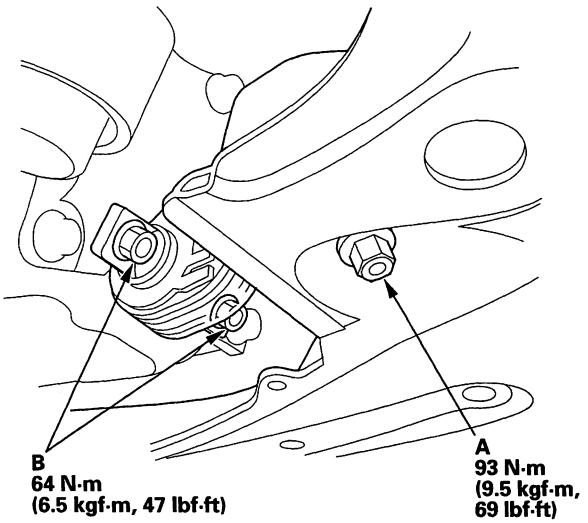


69. Loosen the lower torque rod bolts (B), then retighten the bolts (B) to the specified torque.

70. Tighten the lower torque rod bolt (A) to the specified torque.

71. Tighten the upper torque rod bolt (A) to the specified torque.

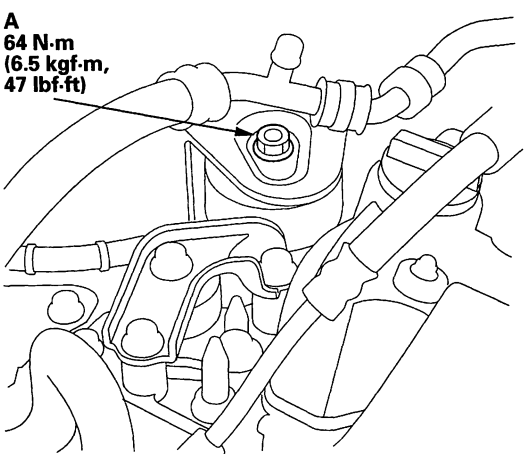

Protected by AR



## Drive Plate Removal and Installation

1. Remove the transmission assembly (see page 14-247).

2. Remove the drive plate (A) and washer (B) from the engine crankshaft.

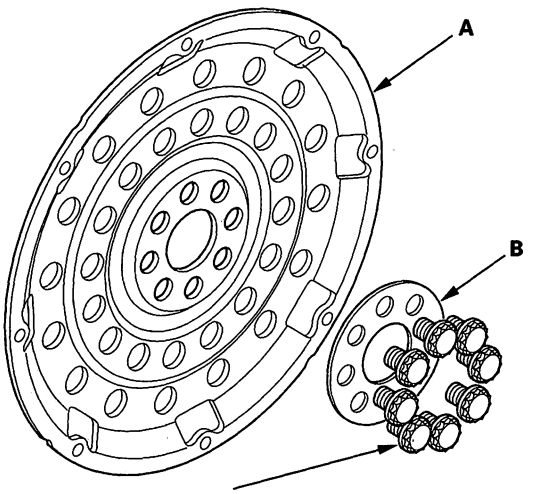


**12 x 1.0 mm**
**74 N·m (7.5 kgf·m, 54 lbf·ft)**

3. Install the drive plate and washer on the engine crankshaft, and tighten the eight bolts in a crisscross pattern in two or more steps.

4. Install the transmission assembly (see page 14-258).



BACK

Protected by AR

## ATF Cooler Cleaning

**Special Tools Required**
- ATF cooler cleaner GHTTTCF6H
- Magnetic Nonbypass Spin-on Filter GTHGNBP2

These special tools are available through the American Honda Tool and Equipment Program 1-888-424-6857.

Before installing an overhauled or remanufactured automatic transmission, you must thoroughly clean the ATF cooler to prevent system contamination. Failure to do so could cause a repeat automatic transmission failure.

The cleaning procedure involves heated ATF-Z1 delivered under high pressure (100 psi). Check the security of all hoses and connections. Always wear safety glasses or a face shield, along with gloves and protective clothing. If you get ATF in your eyes or on your skin, rinse with water immediately.

**⚠ WARNING**

- Improper use of the ATF cooler cleaner can result in burns and other serious injuries.
- Always wear eye protection and protective clothing, and follow all instructions in this manual.

1. Check the fluid in the cooler cleaner tank. (The fluid level should be 4.5 inches from the top of the filler neck.) Adjust the level if needed; do not overfill. Use only Honda ATF-Z1; do not use any additives.

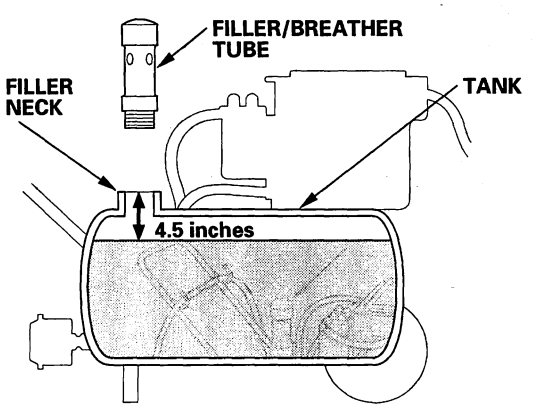


2. Plug the cooler cleaner into a 110 V grounded electrical outlet.

**NOTICE**
Make sure the outlet has no other appliances (light fixtures, drop lights, extension cords) plugged into it. Also, never plug the cooler cleaner into an extension cord or drop light; you could damage the unit.

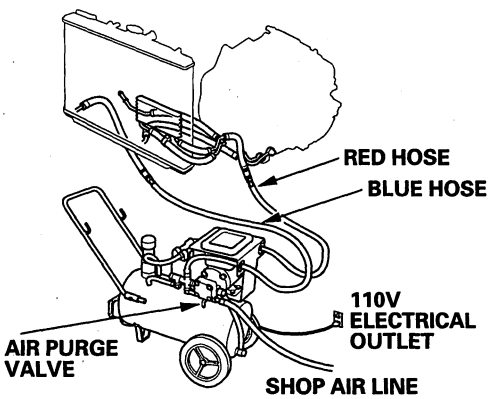


3. Flip the HEAT toggle switch to ON; the green indicator above the toggle switch comes on. Wait 1 hour for the cooler cleaner to reach its operating temperature. (The cooler cleaner is ready to use when the temperature gauge reads 140 °to 150 °F.)

   NOTE: If the red indicator above the HEAT toggle switch comes on, the fluid level in the tank is too low for the tank heater to work (see step 1 of this procedure).

4. Select the appropriate pair of fittings, and attach them to the radiator, to the hoses, or to the banjo bolts for flow through the ATF cooler cleaner.

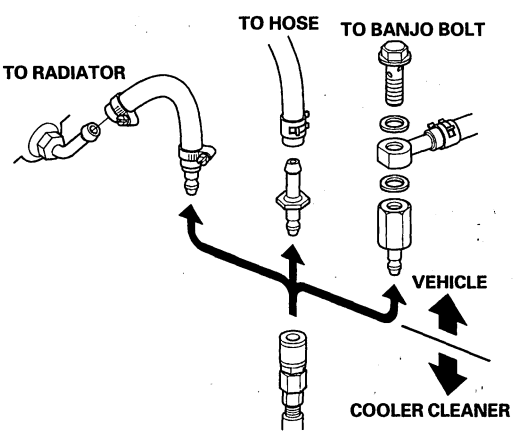


(cont'd)

Protected by AR



## ATF Cooler Cleaning (cont'd)

5. Connect the red hose to the cooler outlet line (the line that normally goes to the external filter on the transmission).

6. Connect the blue hose to the cooler inlet line.

7. Connect a shop air hose (regulated to 100 to 125 psi) to the air purge valve.

   **NOTICE**
   The quick-connect fitting has a one-way check valve to keep ATF from entering your shop's air system. Do not remove or replace the fitting. Attach the coupler provided with the cooler cleaner to your shop air line if your coupler is not compatible.

8. Flip the MOTOR toggle switch to ON; the green indicator above the toggle switch comes on. Let the pump run for 5 minutes. While the pump is running, open and close the air purge valve periodically to cause agitation and improve the cleaning process. Always open the valve slowly. At the end of the 5-minutes cleaning period, leave the air purge valve open.

   NOTE: While the pump is running with the air purge valve open, it is normal to see vapor coming from the filler/breather tube vents.

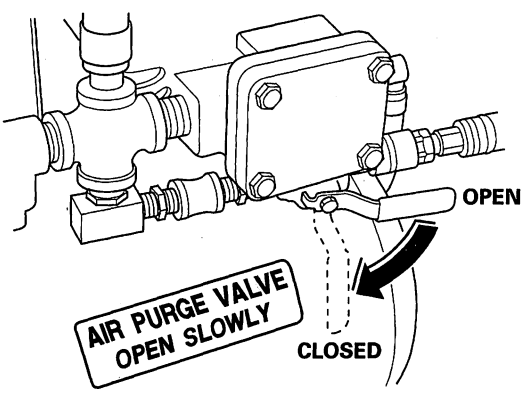


9. With the air purge valve open, flip the MOTOR toggle switch to OFF; the green indicator goes off. Leave the air purge valve open for at least 15 seconds to purge the lines and hoses of residual ATF, then close the valve.

10. Disconnect the red and blue hoses from the ATF cooler. Now connect the red hose to the cooler inlet line.

11. Now connect the blue hose to the cooler outlet line.

12. Flip the MOTOR toggle switch to ON, and let the pump run for 5 minutes. While the pump is running, open and close the air purge valve periodically. Always open the valve slowly. At the end of the 5-minute cleaning period, leave the air purge valve open.

    NOTE: While the pump is running with the air purge valve open, it is normal to see vapor coming from the filler/breather tube vents.

13. With the air purge valve open, flip the MOTOR toggle switch to OFF. Leave the air purge valve open for at least 15 seconds to purge the lines and hoses of residual ATF, then close the valve.

14. Disconnect the red and blue hoses from the ATF cooler lines.

15. Connect the red and blue hoses to each other.

16. Disconnect the shop air from the air purge valve. Disconnect and stow the coupler if used.

17. Disconnect and stow the fittings from the ATF cooler inlet and outlet lines.

18. Unplug the cooler cleaner from the 110 V outlet.

**Tool Maintenance**

Follow these instructions to keep the ATF cooler cleaner working properly:

- Replace the two magnetic nonbypass spin-on filters once a year or when you notice a restriction in the ATF flow.
- Check the level and condition of the fluid in the tank before each use.
- Replace the ATF in the tank when it looks dark or dirty.

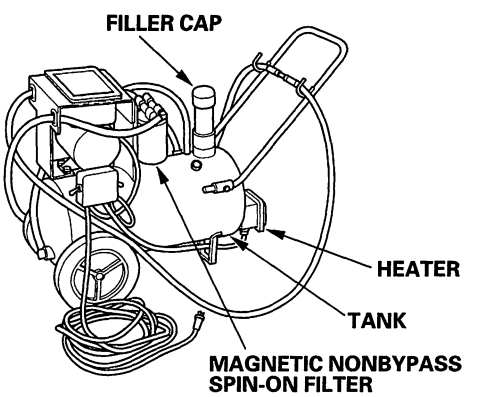




BACK

Protected by AR

## ATF Cooler Hose Replacement

1. Slide the ATF cooler hoses (A) over the ATF cooler lines (B) until the hose ends contact with the bulge (C) of the ATF cooler line, and secure the hoses with the clip (D) at 2—4 mm (0.1—0.2 in.) (E) from the hose end.

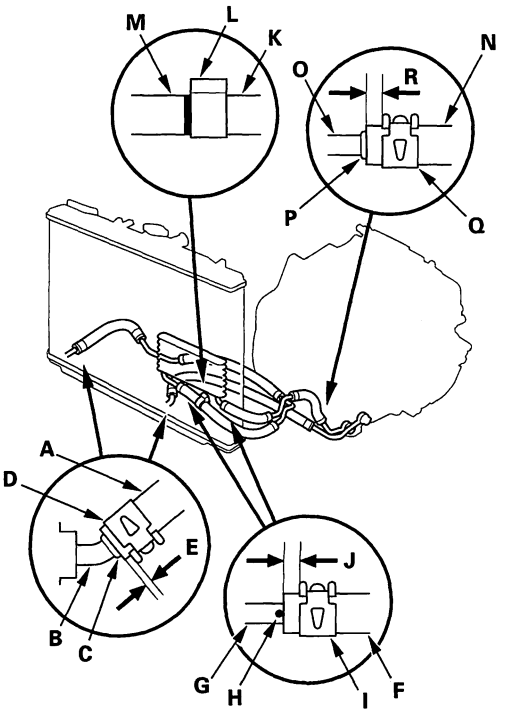


2. Slide the ATF cooler hoses (F) over the ATF cooler lines (G) until the hose ends contact to the white dot (H) on the ATF cooler line, and secure the hose with the clips (I) at 6—8 mm (0.2—0.3 in.) (J) from the hose end.

3. Secure the ATF cooler hose (K) with the clamp (L) at the white line (M) on the hose.

4. Slide the ATF cooler outlet hose (N) over the ATF cooler outlet line (O) until the hose end contacts with the bulge (P) of the outlet line, and secure the hose with the clip (Q) at 6—8 mm (0.2—0.3 in.) (R) from the hose end.

5. Slide the ATF cooler hoses (A) over the ATF cooler lines (B) until the hose ends contact with the bulge (C) of the ATF cooler lines, and secure the hoses with the clips (D) at appropriate points.

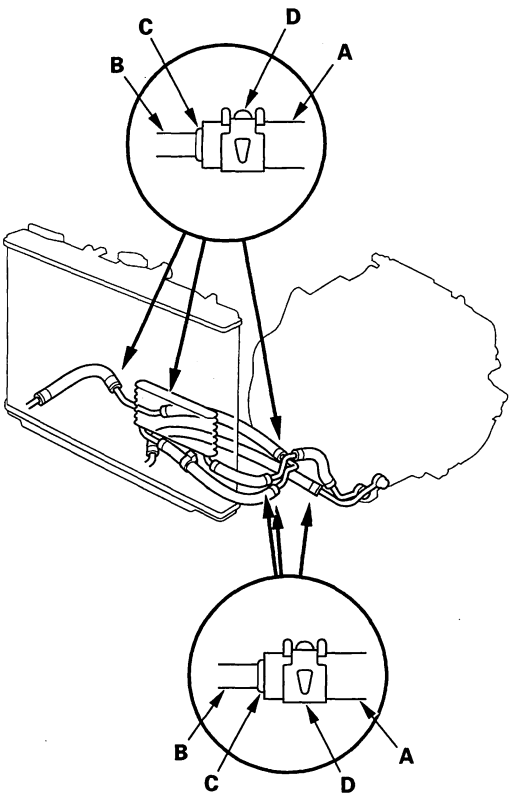


BACK

Protected by AR



## ATF Cooler Replacement

1. Remove the bumper assembly (see page 20-146).

2. Remove the harness clamps, disconnect the ATF cooler hoses from the ATF cooler, and remove the ATF cooler (A) and cooler joint line (B).

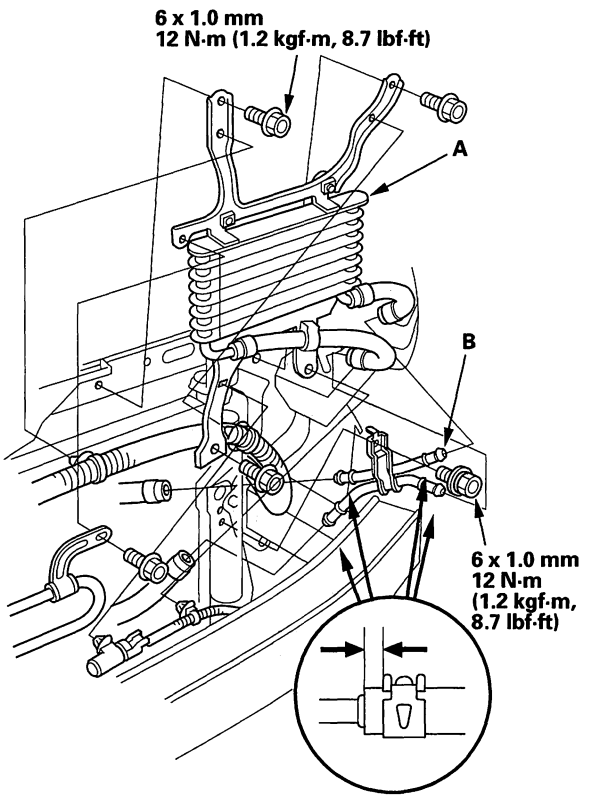


3. Remove ATF cooler hoses (A) and mounting brackets (B).

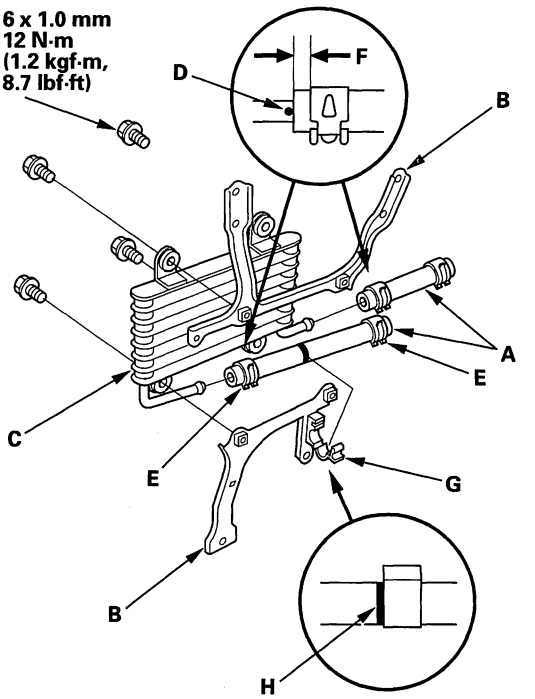


4. Install the mounting bracket on the new ATF cooler (C).

5. Slide the ATF cooler hoses over the ATF cooler lines until the hose ends contact to the white dot (D) on the ATF cooler lines, and secure the hose with the clips (E) at 6—8 mm (0.2—0.3 in.) (F) from the hose end.

6. Secure the ATF cooler hose with the clamp (G) at the white line (H) on the hose.

7. Install the joint line and ATF cooler on the body, and install the harness clamp on the bracket.

8. Connect the ATF cooler hoses to the ATF cooler lines, and secure the hose with the clips (see page 14-273).

9. Install the bumper assembly (see page 20-146).



BACK

Protected by AR

## Shift Lever Removal

1. Remove the center console panel (see page 20-92), and driver's center console lower cover (see step 4 on page 20-93).

2. Shift the transmission to the R position.

3. Remove the nut securing the shift cable end.

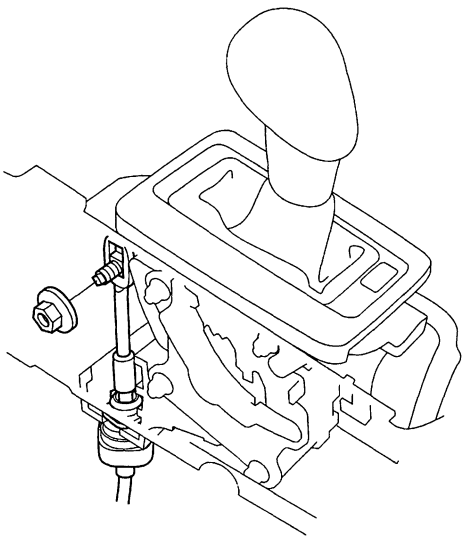

4. Rotate the socket holder (A) on the shift cable (B) a quarter turn; the tab (C) on the socket holder will be in the opening (D) of the shift cable bracket (E). Then slide the holder to remove the shift cable from the bracket. Do not remove the shift cable by twisting the shift cable guide (F).

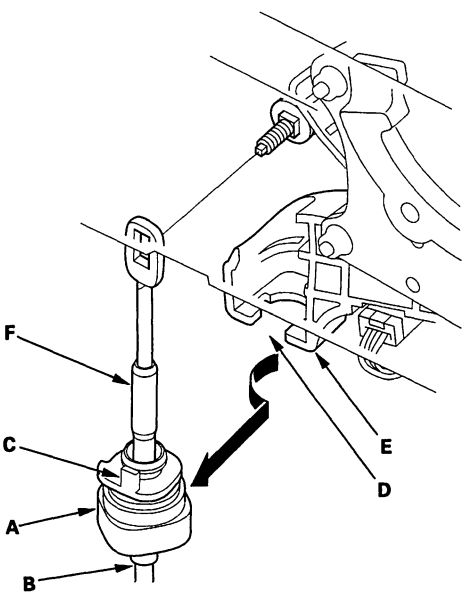


5. Disconnect the shift lock solenoid connector (A) and park pin switch/A/T gear position indicator panel light connector (B).

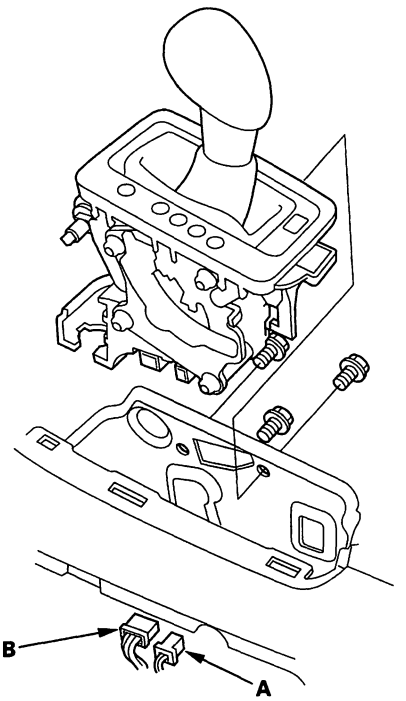


6. Remove the mounting bolts, then remove the shift lever assembly.

Protected by AR



## Shift Lever Installation

1. Install the shift lever assembly.

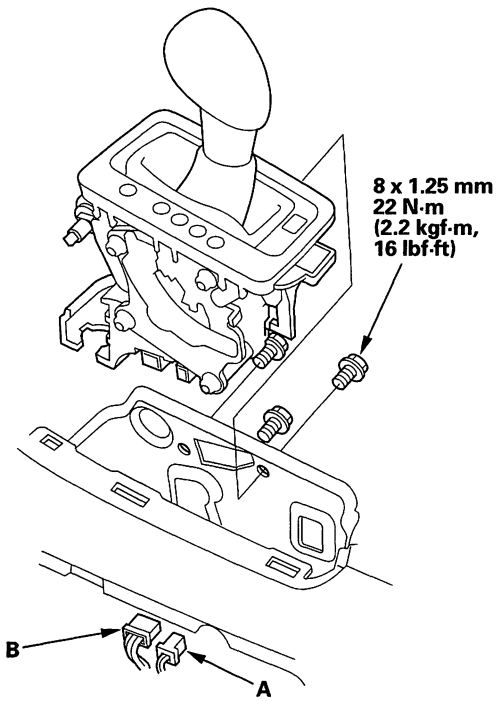


2. Connect shift lock solenoid connector (A) and park pin switch/A/T gear position indicator panel light connector (B).

3. Install the shift cable on the shift lever, and adjust the shift cable (see step 5 on page 14-285).



BACK

Protected by AR

## Shift Lever Disassembly/Reassembly

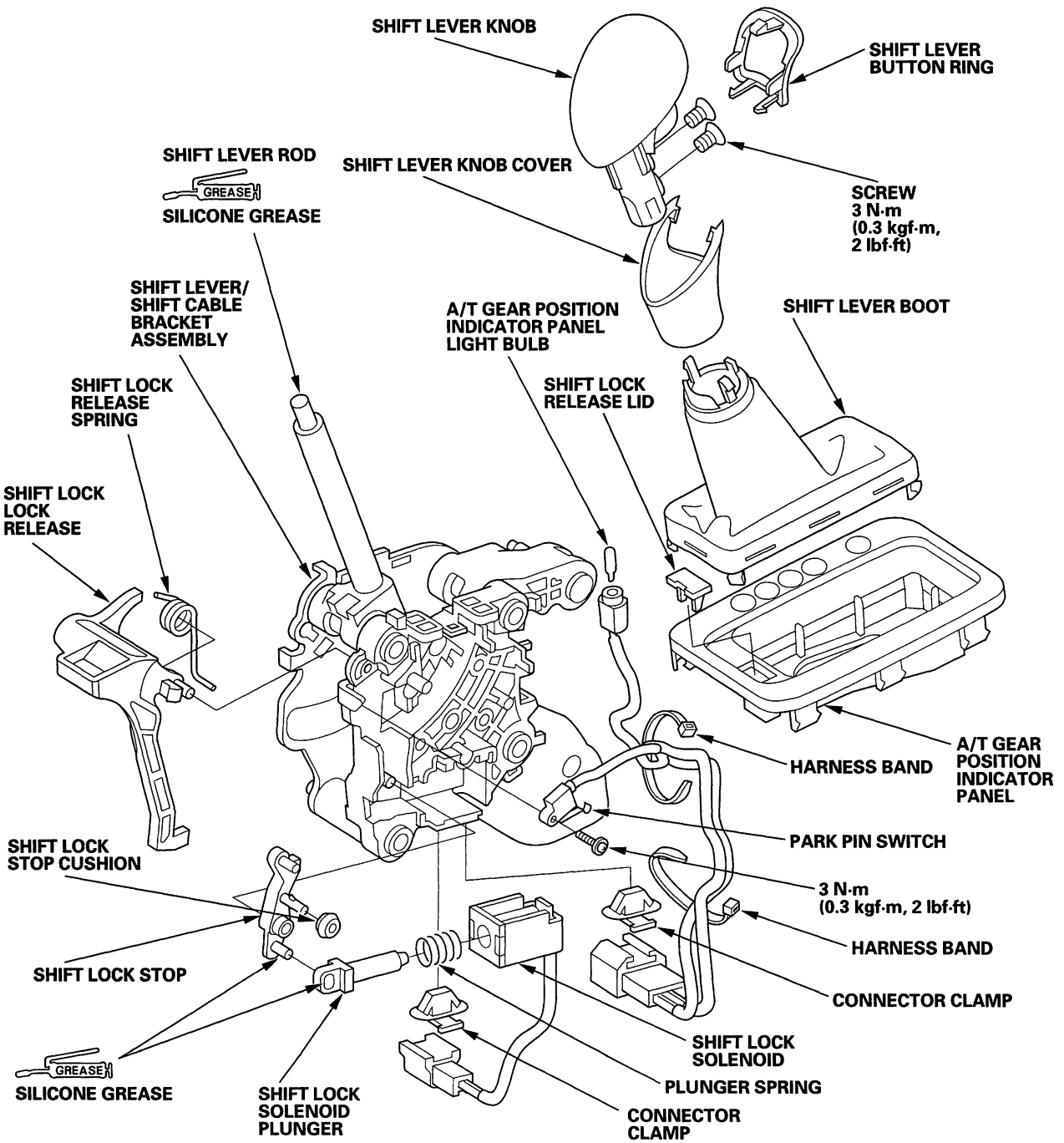


BACK

Protected by AR



## Shift Lever/Shift Cable Bracket Assembly Replacement

NOTE: Refer to the Shift Lever Disassembly and Reassembly (see page 14-277) as needed during the following procedures.

1. Remove the shift lever (see page 14-275).
2. Grasp the shift lever boot ring, and slip it out of the shift lever knob cover.

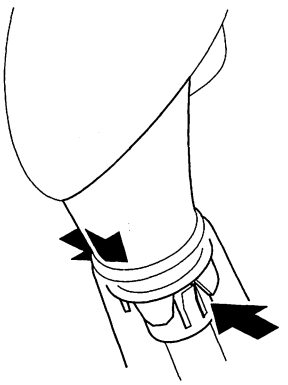

3. Remove the shift lever button ring (A).

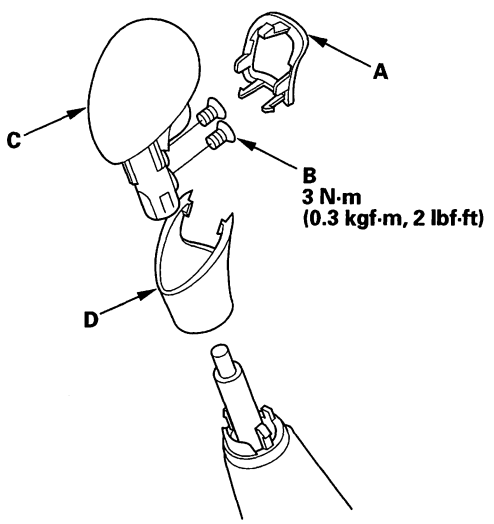


4. Remove the screws (B), then remove the shift lever knob (C).
5. Remove the shift lever knob cover (D).
6. Remove the A/T gear position indicator panel light from the indicator panel, and remove the A/T gear position indicator panel/shift lever boot assembly.
7. Remove the shift lock release and release spring.
8. Remove the shift lock solenoid connector and park pin switch/A/T gear position indicator panel light connector.
9. Remove the harness bands, and remove the park pin switch and A/T gear position indicator panel light.
10. Release the lock tabs retaining the shift lock solenoid using thin blade screwdrivers.

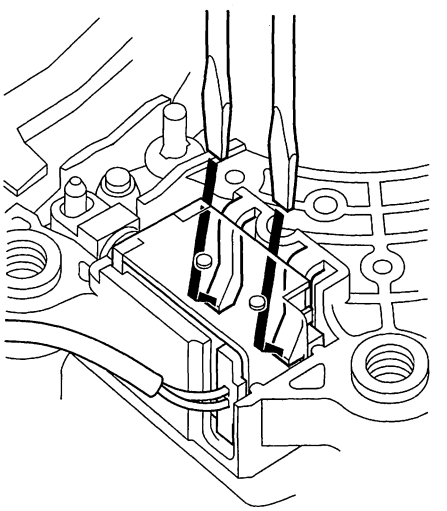



BACK

Protected by AR

11. Insert a 6 mm pin (A) into the guide hole (B), and push the shift lock solenoid (C) out.

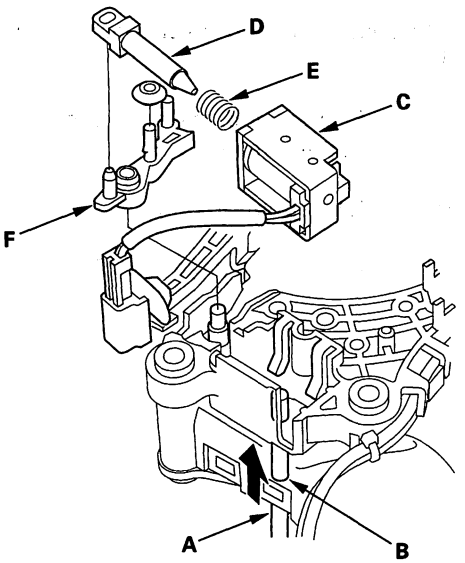


12. Remove the shift lock solenoid plunger (D), plunger spring (E), and shift lock stop and stop cushion (F).

13. Replace the shift lever/shift cable bracket assembly.

14. Install the shift lock stop and stop cushion.

15. Apply silicone grease to joint of the shift lock solenoid plunger and shift lock stop, if necessary.

16. Install the shift lock solenoid plunger and plunger spring in the shift lock solenoid.

17. Install the shift lock solenoid by aligning the joint of the shift lock solenoid plunger with the tip of the shift lock stop, then push the shift lock solenoid into the shift lever securely.

18. Install the park pin switch, and secure the switch with the new screw.

19. Install the shift lock solenoid connector and park pin switch/A/T gear position indicator panel light connector.

20. Route the park pin switch harness and indicator panel light harness, and secure the harnesses with the band (A); tie the indicator panel light harness at the white tape (B) with the band.

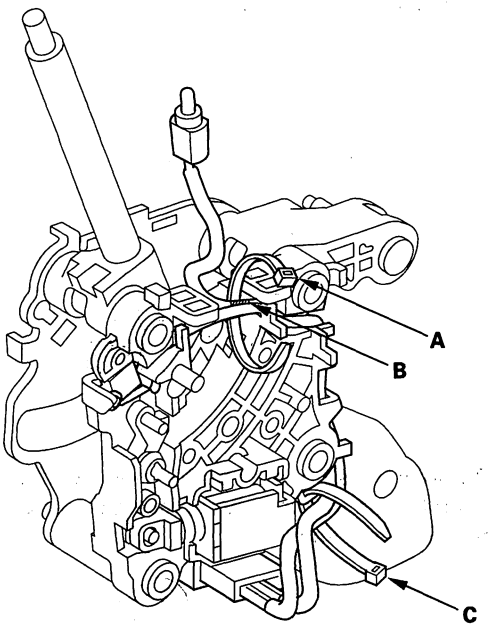


21. Secure the harnesses with the band (C).

22. Install the shift lock release and release spring.

23. Install the A/T gear position indicator panel/shift lever boot assembly.

24. Install the indicator panel light in the indicator panel.

25. Install the shift lever knob cover over the shift lever boot ring.

26. Install the shift lever knob, and secure the shift lever knob with the screws.

27. Install the shift lever button ring.

28. Install the shift lever (see page 14-276).

BACK

Protected by AR



## Shift Lever Knob, Shift Lever Knob Cover, and Shift Lever Button Ring Replacement

1. Remove the shift lever (see page 14-275).
2. Grasp the shift lever boot ring, and slip it out of the shift lever knob cover.

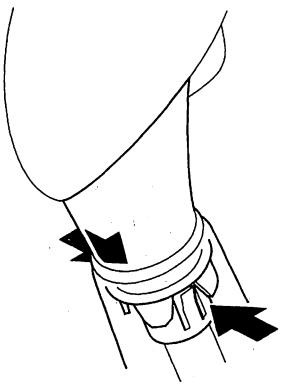

3. Remove the shift lever button ring (A). If the shift lever button ring is only replaced, skip steps 4 thru 8 and go to step 9.

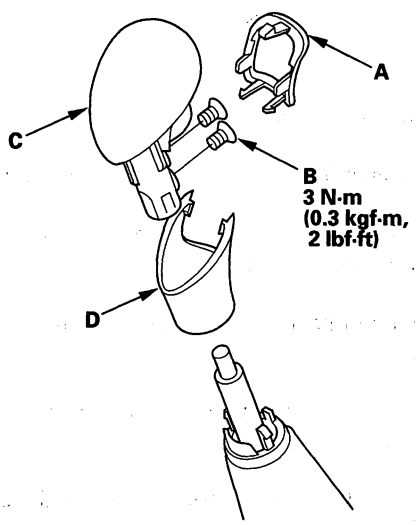


4. Remove the screws (B), then remove the shift lever knob (C).
5. Remove the shift lever knob cover (D).
6. Replace the shift lever knob or knob cover.
7. Install the shift lever knob cover over the shift lever boot ring.
8. Install the shift lever knob, and secure the shift lever knob with the screws.
9. Install the shift lever button ring.
10. Install the shift lever (see page 14-276).



BACK

Protected by AR

## Shift Lever Boot and A/T Gear Position Indicator Panel Replacement

1. Remove the shift lever knob, shift lever knob cover, and shift lever button ring (see page 14-280).

2. Remove the A/T gear position indicator panel light bulb from the panel, and remove the A/T gear position indicator panel/shift lever boot assembly.

3. Release the lock tabs retaining the shift lever boot using a screwdriver.

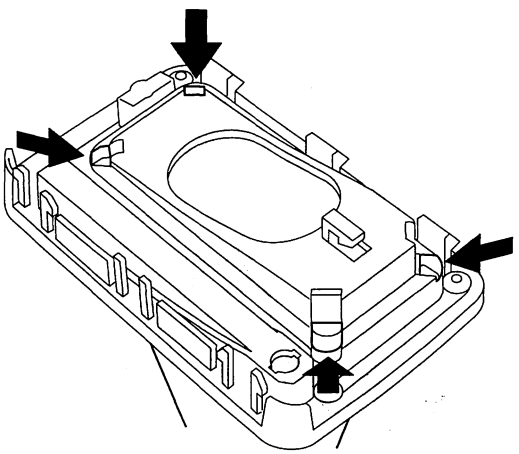

4. Replace the shift lever boot or A/T gear position indicator panel, and install the boot in the indicator panel.

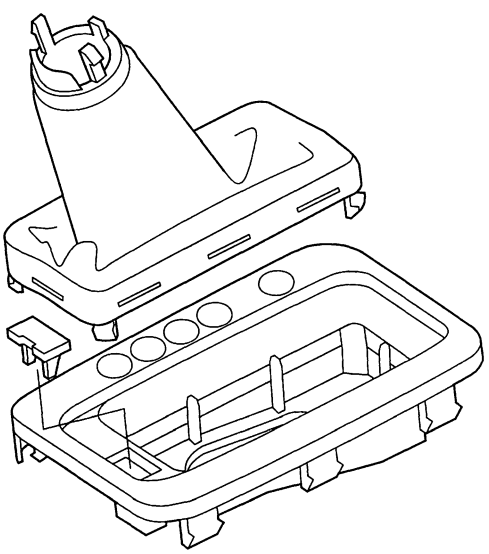

5. Install the A/T gear position indicator panel/shift lever boot assembly.

6. Install the indicator panel light socket in the panel.

7. Install the shift lever knob, shift lever knob cover, and shift lever button ring (see page 14-280).

BACK

Protected by AR



## Shift Cable Replacement

1. Raise the vehicle up on a lift, or apply the parking brake, block rear wheels, and raise the front of the vehicle. Make sure it is securely supported.
2. Make sure you have the audio system and navigation system (if equipped) anti-theft codes, and write down the audio presets.
3. Disconnect the negative terminal from the battery, then disconnect the positive terminal.
4. Remove the battery hold-down bracket, and remove the battery cover, battery, and battery tray.
5. Remove the battery base.
6. Remove the intercooler cover, air cleaner housing, and intake air duct.
7. Remove the center console panel (see page 20-92), and driver's center console lower cover (see step 4 on page 20-93).
8. Shift the transmission to the R position.
9. Remove the nut securing the shift cable end.

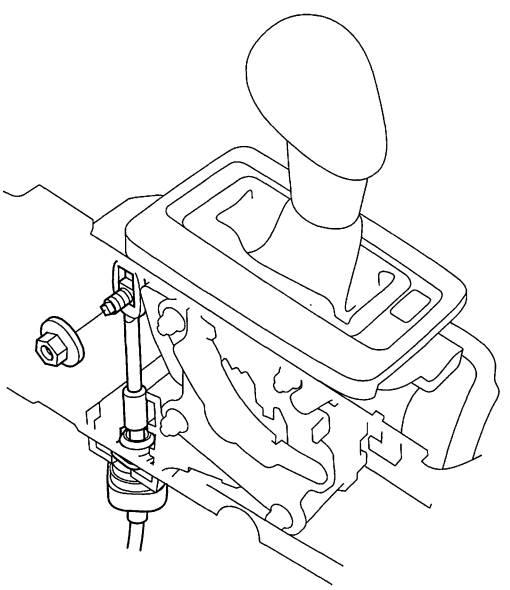

10. Rotate the socket holder (A) on the shift cable (B) a quarter turn; the tab (C) on the socket holder will be in the opening (D) of the shift cable bracket (E). Then slide the holder to remove the shift cable from the bracket.

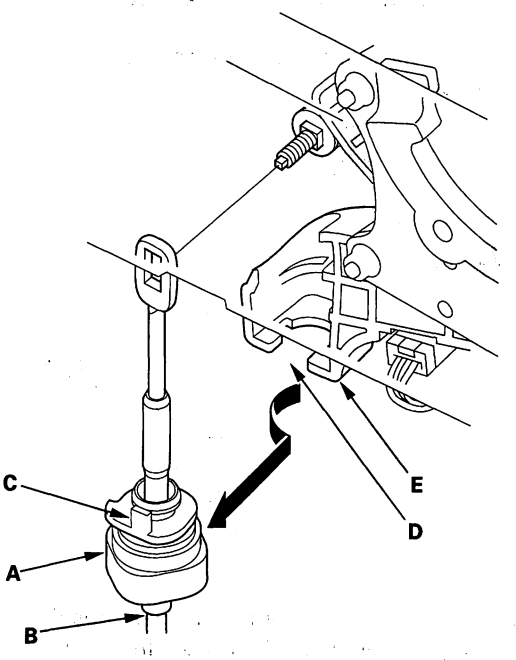




BACK

Protected by AR

11. Remove the nuts securing the shift cable bracket (A).

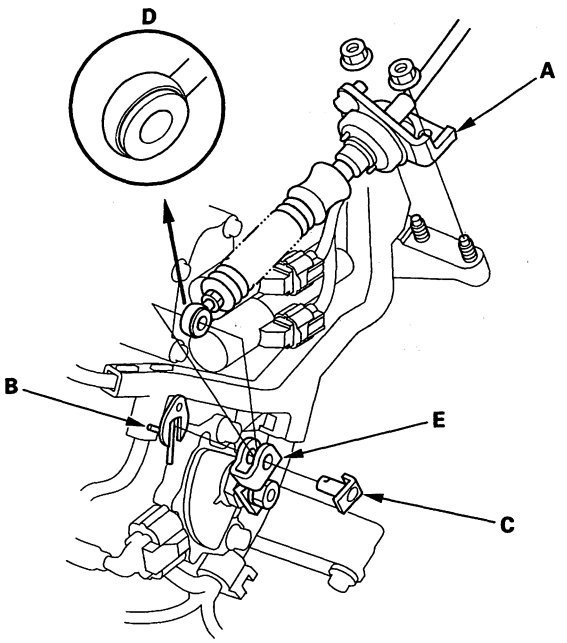


12. Remove the spring clip/washer (B) and control pin (C), then separate the shift cable end (D) from the control lever (E).

13. Remove the heat shield from under the body.

14. Remove the nuts securing the shift cable bracket.

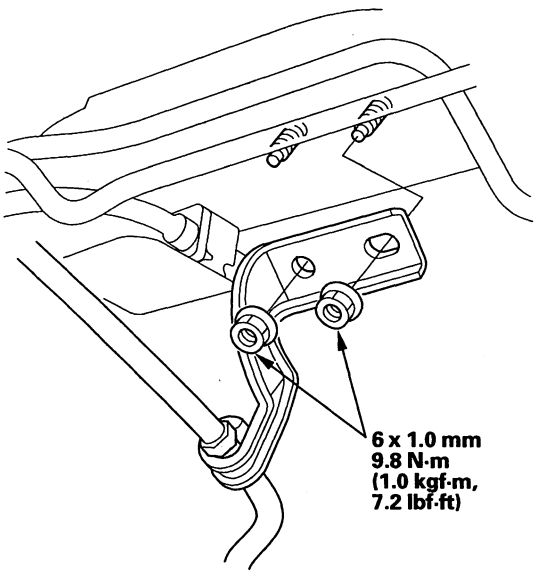


15. Remove the nut securing the shift cable bracket (A).

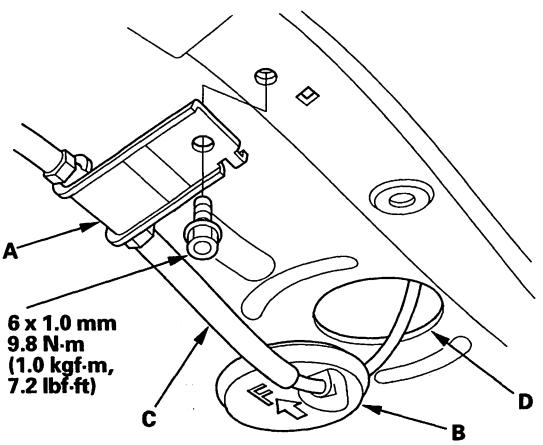


16. Remove the shift cable grommet (B), and pull out the shift cable (C).

17. Insert the new shift cable through the grommet hole (D), and install the grommet in its hole. Do not bend the shift cable excessively.

18. Make sure that the transmission is in the R position at the transmission control lever.

(cont'd)

BACK

Protected by AR



## Shift Cable Replacement (cont'd)

19. Apply molybdenum grease to the bore hole of the synthetic resin bushing (A) in the shift cable end (B), and attach the shift cable end to the control lever (C), then insert the control pin (D) into the control lever hole through the shift cable end, and secure the control pin with the spring clip/washer (E).

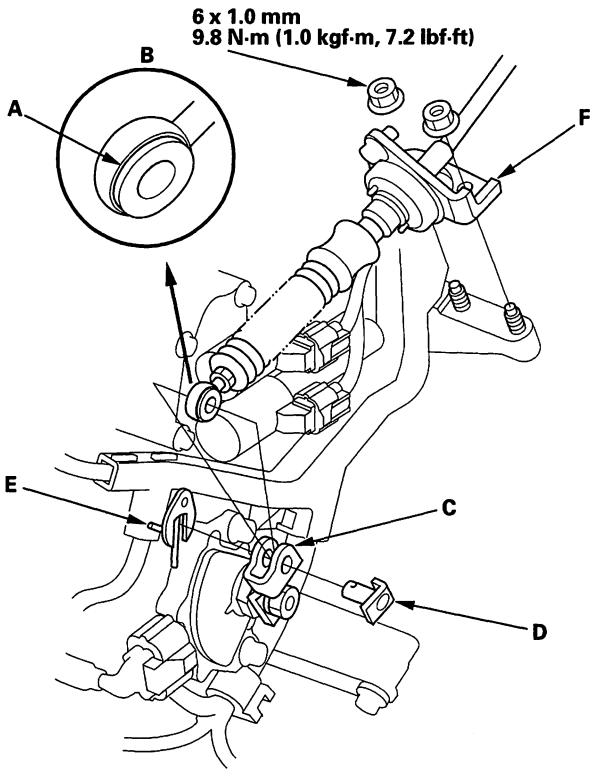


20. Secure the shift cable bracket (F) with the nuts.

21. Install the shift cable on the shift lever, and adjust the shift cable (see step 5 on page 14-285).

22. Install the intake air duct, air cleaner housing, and intercooler cover.

23. Install the battery base.

24. Install the battery tray, battery, battery cover, and battery hold-down bracket, then connect battery terminals.

25. Enter the audio system and navigation system (if equipped) anti-theft codes, then enter the audio presets, and set the clock.

26. Do the power window control unit reset procedure (see page 22-213).



BACK

Protected by AR

## Shift Cable Adjustment

1. Remove the center console panel (see page 20-92), and driver's center console lower cover (see step 4 on page 20-93).

2. Shift the transmission to the R position.

3. Remove the nut securing the shift cable end.

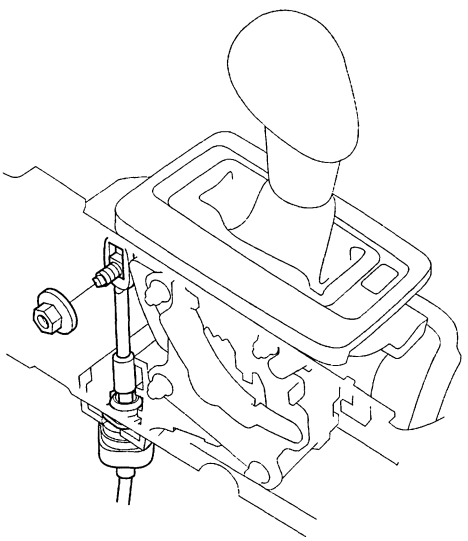

4. Rotate the socket holder (A) on the shift cable (B) a quarter turn; the tab (C) on the socket holder will be in the opening (D) of the shift cable bracket (E). Then slide the holder to remove the shift cable from the bracket. Do not remove the shift cable by twisting the shift cable guide (F).

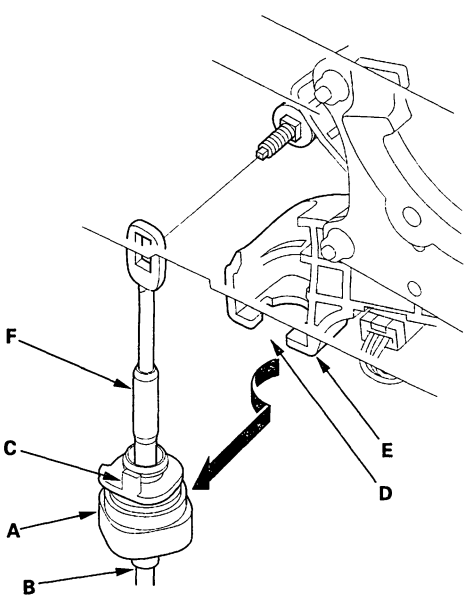


5. Push the shift cable (A) until it stops, then release it. Pull the shift cable one step so that the shift position is in R. Do not hold the shift cable guide (B) to adjust the shift cable.

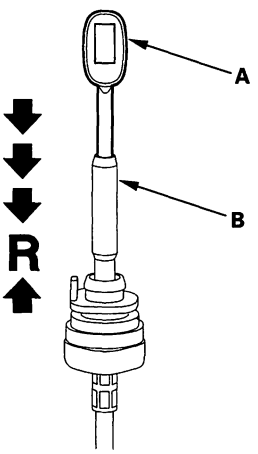


6. Turn the ignition switch ON (II), and verify that the R position indicator comes on.

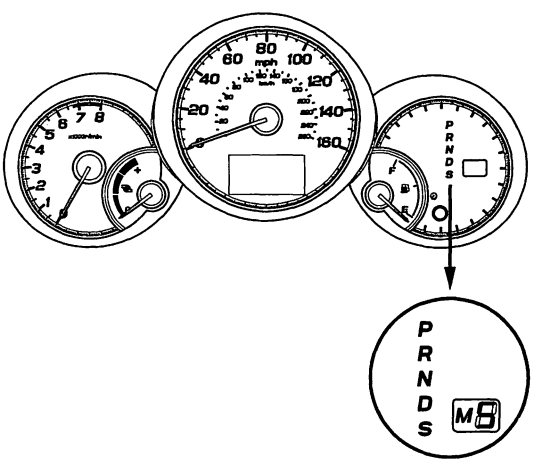


7. Turn the ignition switch OFF.

(cont'd)

BACK

Protected by AR



## Shift Cable Adjustment (cont'd)

8. Place the shift lever in the R position, then insert a 6.0 mm (0.24 in.) pin (A) through the guide hole (B) on the mounting bracket, through the positioning hole, and into the positioning hole on the shift lever bracket. Use only the 6.0 mm pin.

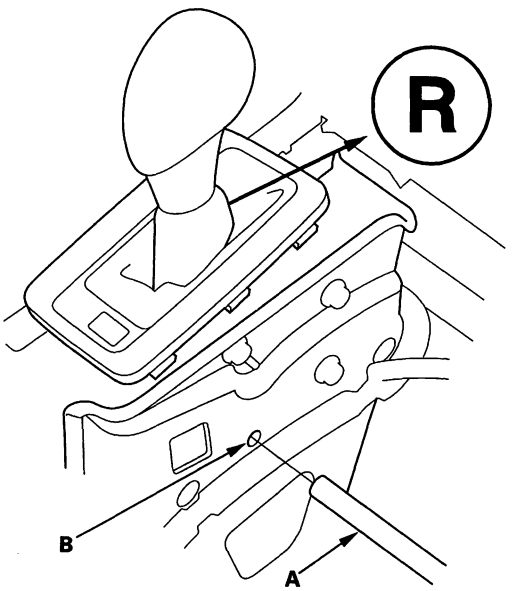


9. Verify that the shift lever is secured in the R position.

10. Rotate the socket holder (A) on the shift cable (B) to place the tab (C) on the holder opposite the opening (D) in the shift cable bracket (E). Align the holder (F) with the opening in the bracket, then slide the holder into the bracket. Install the shift cable end (G) over the mounting stud (H) by aligning its square hole (I) with the square fitting (J) at the bottom of the stud. Rotate the holder a quarter turn until the holder stops to secure the shift cable. Do not install the shift cable by twisting the shift cable guide (K).

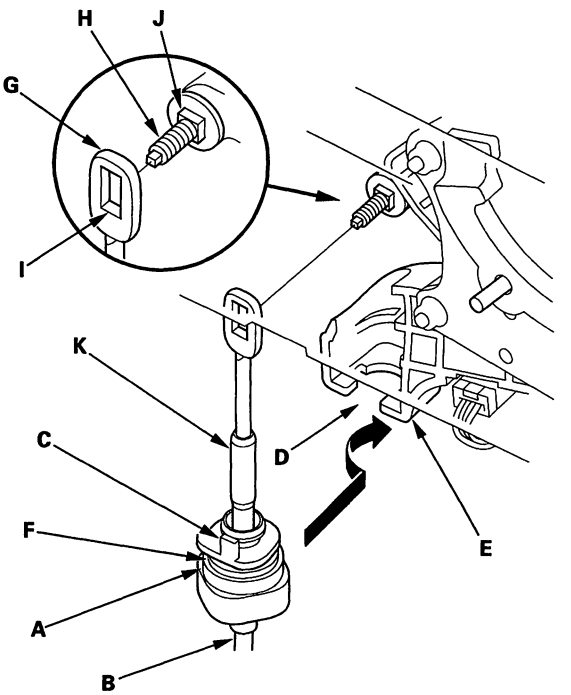




BACK

Protected by AR

11. Verify that the shift cable end is properly installed on the mounting stud.

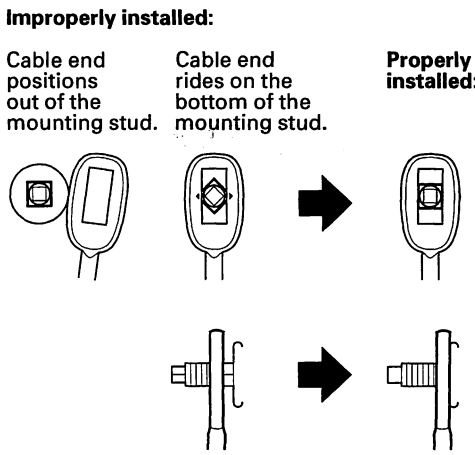


12. If the cable end is out of position on the mounting stud, remove the shift cable from the bracket, and reinstall the shift cable. Do no install the shift cable end on the mounting stud while the shift cable is on the bracket.
If the cable end rides on the bottom on the mounting stud, rotate the stud and align the square fitting with the hole.

13. Install and tighten the nut on the shift cable end.

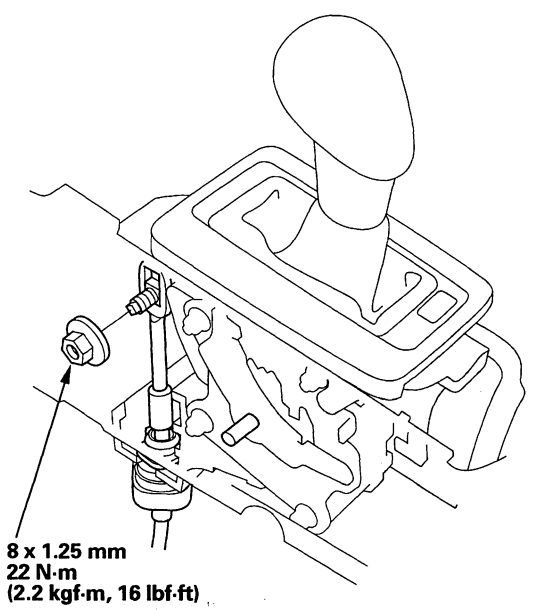


14. Remove the 6.0 mm (0.24 in.) pin that was installed to hold the shift lever.

15. Turn the ignition switch ON (II). Move the shift lever to each position, and verify that the A/T gear position indicator follows the transmission range switch.

16. Shift to the P position, and check that the shift lock works properly. Push the shift lock release, and verify that the shift lever releases, and also check that the shift lever locks when it is shifted back to the P position.

17. Reinstall the center console panel (see page 20-92), and driver's center console lower cover (see step 4 on page 20-93).

BACK

Protected by AR

# A/T Gear Position Indicator

## Component Location Index

**A/T GEAR POSITION INDICATOR**
F-CAN Communication Circuit Troubleshooting, page 11-213
Gauge Control Module Self-diagnostic Function
Indicator Drive Circuit Check, page 22-259
Communication Line Check, page 22-260

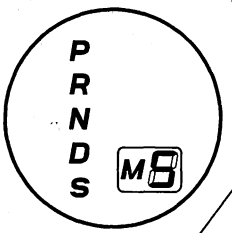


**PADDLE SHIFTER + (UPSHIFT SWITCH)**
Circuit Troubleshooting, page 14-295
Test, page 14-299
Replacement, page 14-300

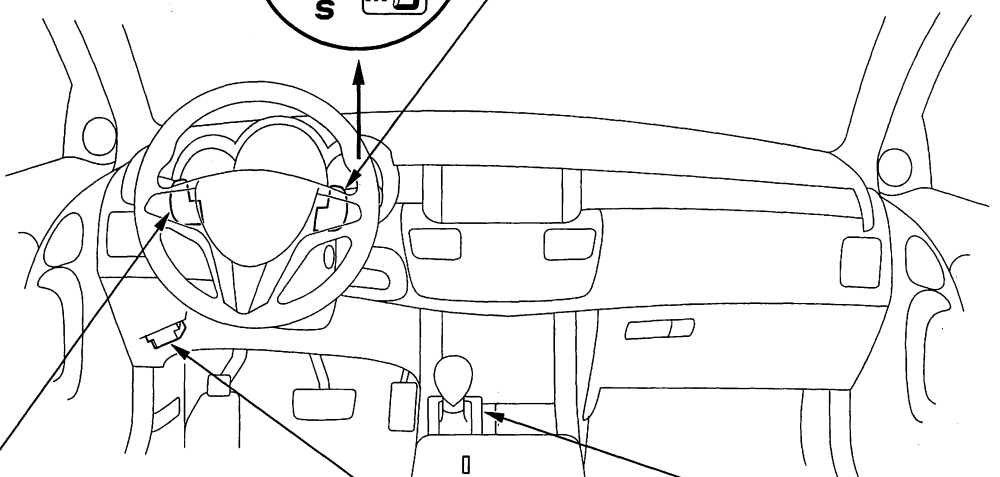

**PADDLE SHIFTER − (DOWNSHIFT SWITCH)**
Circuit Troubleshooting, page 14-297
Test, page 14-301
Replacement, page 14-302

**DATA LINK CONNECTOR (DLC)**

**A/T GEAR POSITION INDICATOR PANEL**
Replacement, page 14-281

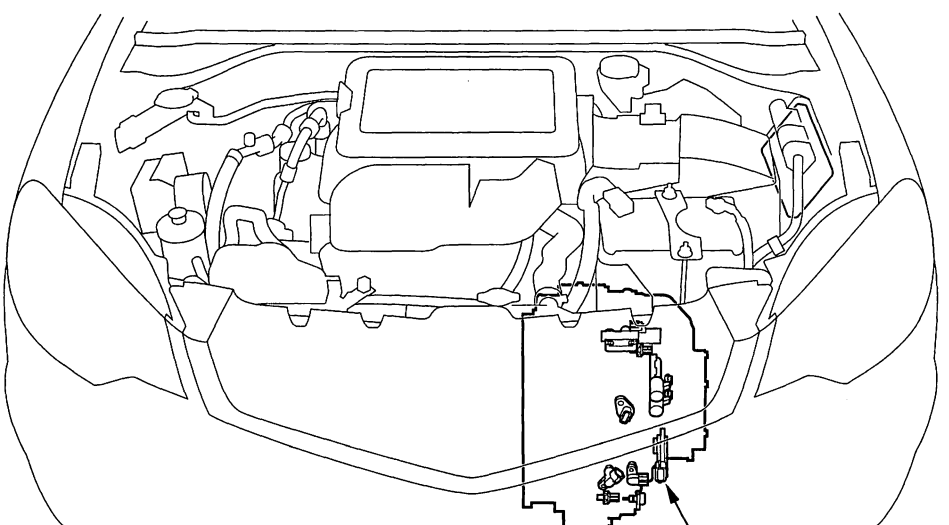

**TRANSMISSION RANGE SWITCH**
Test, page 14-290
Replacement, page 14-292



BACK

Protected by AR

## Circuit Diagram

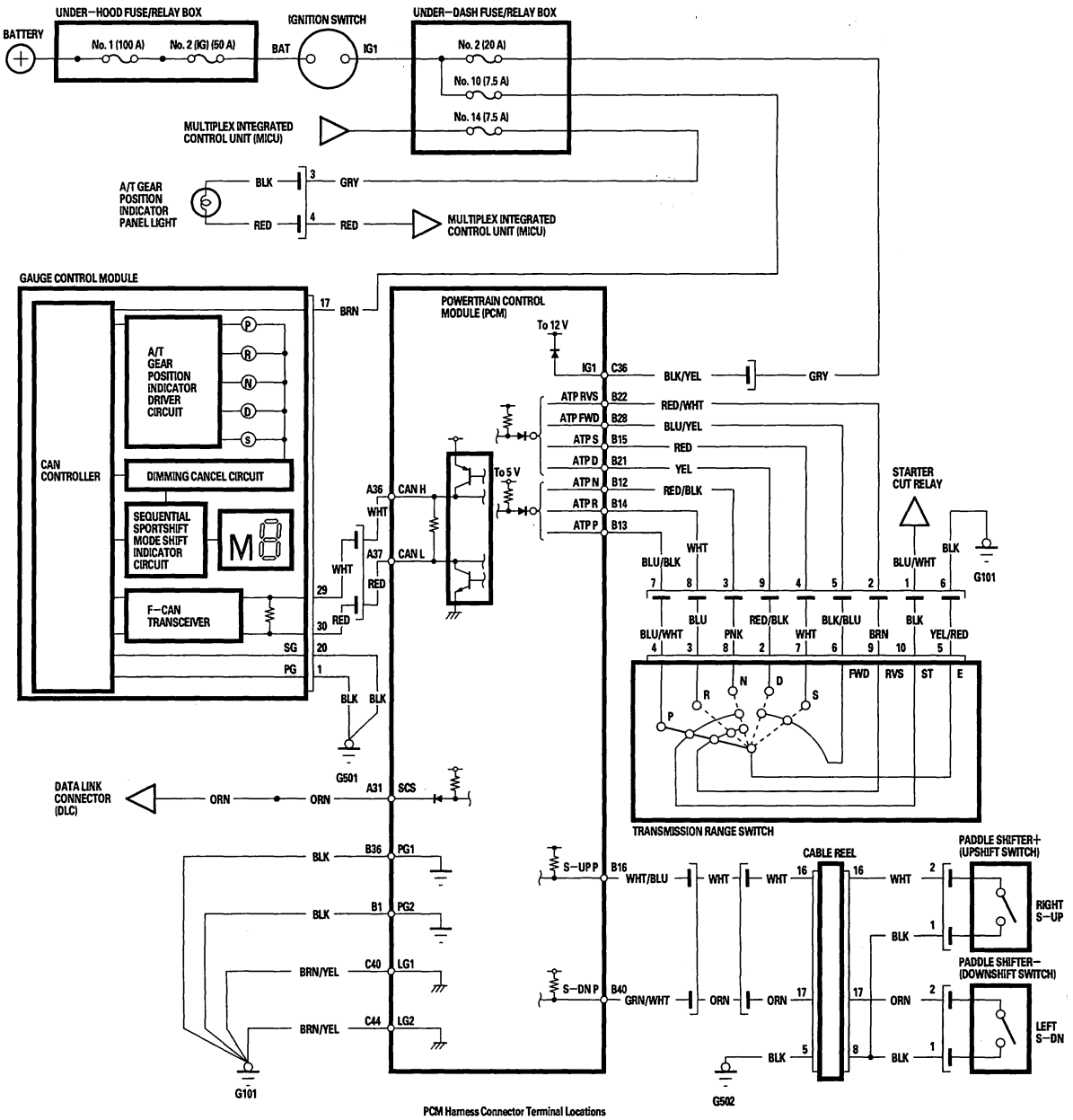


BACK

Protected by AR



## Transmission Range Switch Test

1. Make sure you have the audio system and navigation system (if equipped) anti-theft codes, and write down the audio presets.

2. Disconnect the negative terminal from the battery, then disconnect the positive terminal.

3. Remove the battery hold-down bracket, and remove the battery cover, battery, and battery tray.

4. Remove the battery base.

5. Disconnect the transmission range switch harness connector.

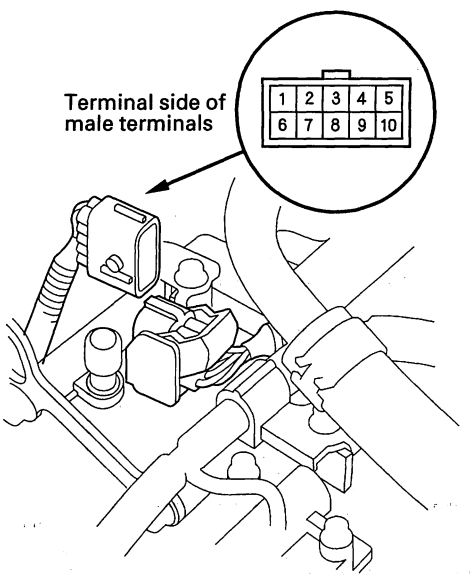


6. Check for continuity between terminals at the harness connector. There should be continuity between the terminals indicated in the following table for each switch position.

**Transmission Range Switch Harness Connector**

| Position | Connector Terminal/Signal | | | | | | | | | |
|---|---|---|---|---|---|---|---|---|---|---|
| | 1 | 2 | 3 | 4 | 5 | 6 | 7 | 8 | 9 | 10 |
| | ATP NP | ATP RVS | N | S | ATP FWD | GND | P | R | D | — |
| P | ○ | ○ | | | | ○ | ○ | | | |
| R | | ○ | | | | ○ | | ○ | | |
| N | ○ | ○ | ○ | | | ○ | | | | |
| D | | | | | ○ | ○ | | | ○ | |
| S | | | | ○ | ○ | ○ | | | | |

7. The transmission range switch test is finished if the test results are OK.
If there is no continuity between any terminals, go to step 8.

8. Disconnect the transmission range switch connector.

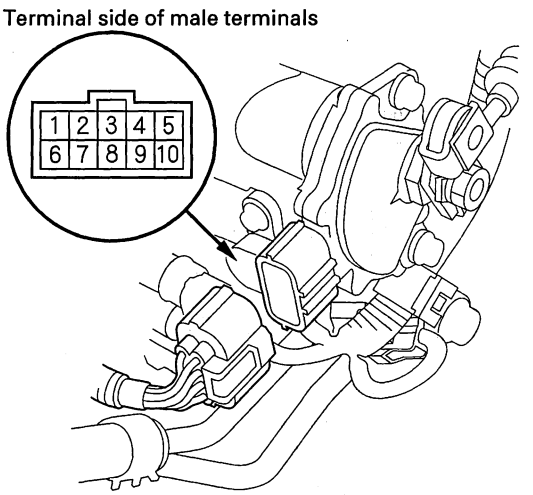


9. Check for continuity between terminals at the switch connector. There should be continuity between the terminals indicated in the following table for each switch position.

**Transmission Range Switch Connector**

| Position | Connector Terminal/Signal | | | | | | | | | |
|---|---|---|---|---|---|---|---|---|---|---|
| | 1 | 2 | 3 | 4 | 5 | 6 | 7 | 8 | 9 | 10 |
| | — | D | R | P | GND | ATP FWD | S | N | ATP RVS | ATP NP |
| P | | | | ○ | ○ | | | | ○ | ○ |
| R | | | ○ | | ○ | | | | ○ | |
| N | | | | | ○ | | | ○ | ○ | ○ |
| D | | ○ | | | ○ | ○ | | | | |
| S | | | | | ○ | ○ | ○ | | | |



BACK

Protected by AR

10. If the transmission range switch continuity check is OK, replace the faulty transmission range switch harness. If there is no continuity between any terminals, check the transmission range switch installation. If the switch installation is OK, replace the switch (see page 14-292).

11. Check the connector for rust, dirt, or oil, then connect the connectors securely.

12. Install the battery base.

13. Install the battery tray, battery, battery cover, and battery hold-down bracket, then connect the battery terminals.

14. Enter the audio system and navigation system (if equipped) anti-theft codes, then enter the audio presets, and set the clock.

15. Do the power window control unit reset procedure (see page 22-213).

Protected by AR



## Transmission Range Switch Replacement

1. Make sure you have the audio system and navigation system (if equipped) anti-theft codes, and write down the audio presets.

2. Disconnect the negative terminal from the battery, then disconnect the positive terminal.

3. Remove the battery hold-down bracket, and remove the battery cover, battery, and battery tray.

4. Remove the battery base.

5. Remove the intercooler cover, air cleaner housing, and intake air duct.

6. Remove the nuts securing the shift cable bracket (A).

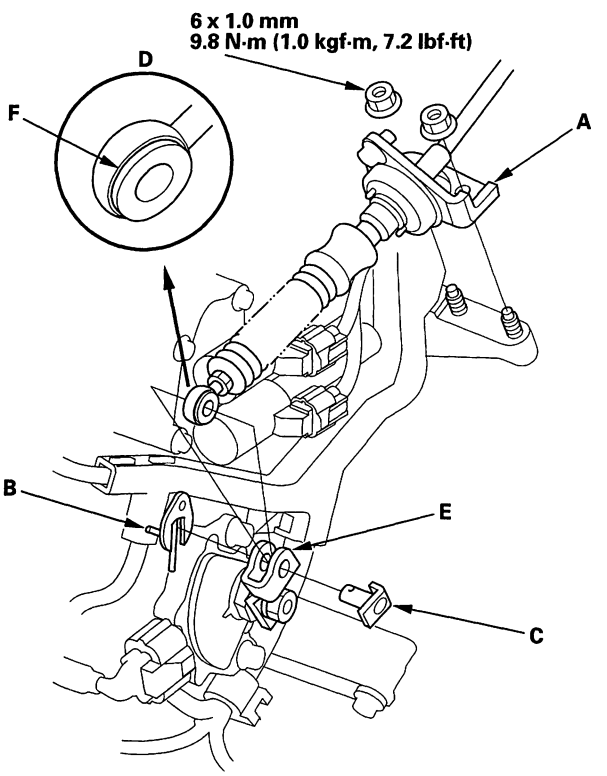


7. Remove the spring clip/washer (B) and control pin (C), then separate the shift cable end (D) from the control lever (E).

8. Check the synthetic resin bushing (F) in the shift cable end for a proper fit and wear. If the bushing is loose or worn, replace the shift cable (see page 14-282).

9. Disconnect the transmission range switch connector.

10. Pry the lock tab of the lock washer (A) on the control lever (B), and remove the nut (C), lock washer, spring washer (D), and control lever.

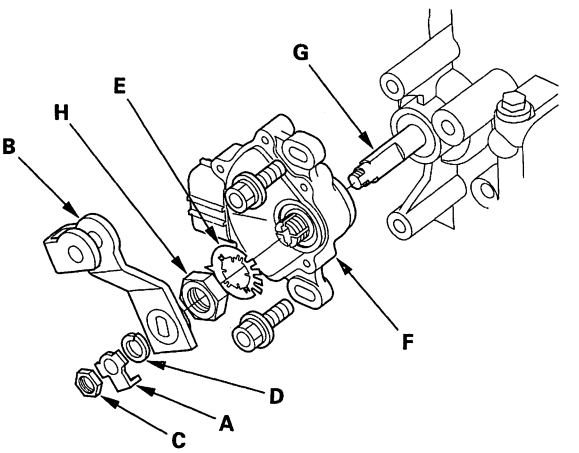


11. Pry the lock tabs of the lock washer (E) on the transmission range switch (F), hold the control shaft (G) with a 6.0 mm wrench, and loosen the locknut (H).

12. Remove the locknut and lock washer, then remove the transmission range switch (two bolts).

13. Set the new transmission range switch (A) to the N position. The transmission range switch clicks in the N position, and the control shaft hole (B) aligns with the N position line (C).

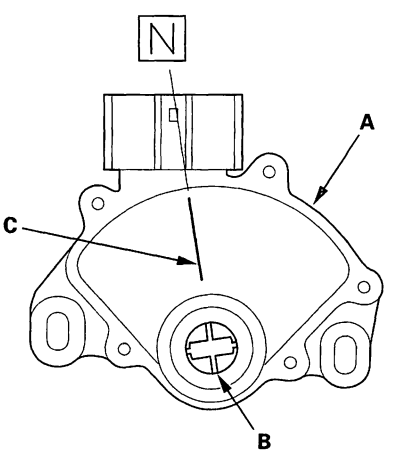




BACK

Protected by AR

14. Set the control shaft to the N position by turning the control shaft with a 6.0 mm wrench.

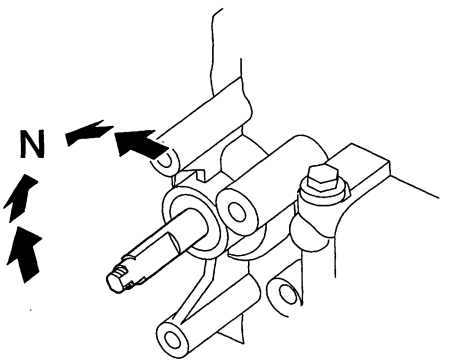


15. Install the transmission range switch (A) gently over the control shaft (B), and install the bolts loosely.

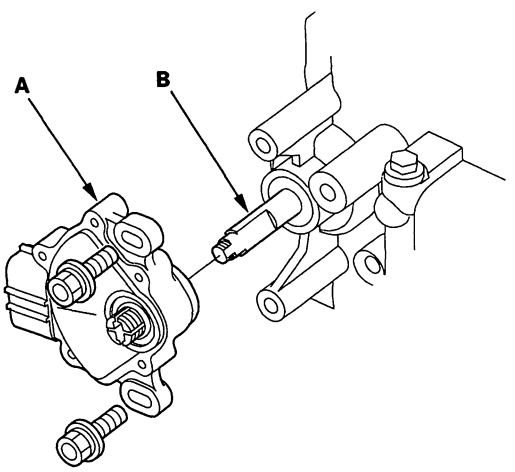


16. Install the new lock washer (A) over the control shaft (B) with aligning the projection (C) of the lock washer with the N positioning line (D) on the transmission range switch (E), and install the locknut (F).

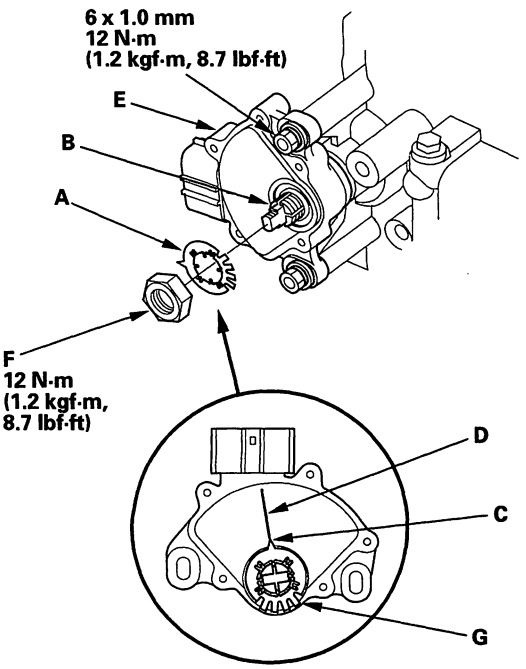


17. Push the locknut against the transmission housing to seat the transmission range switch into the control shaft, and tighten the locknut to 12 N·m (1.2 kgf·m, 8.7 lbf·ft) while holding the control shaft with a 6.0 mm wrench, then bend the lock tabs (G) against the locknut.

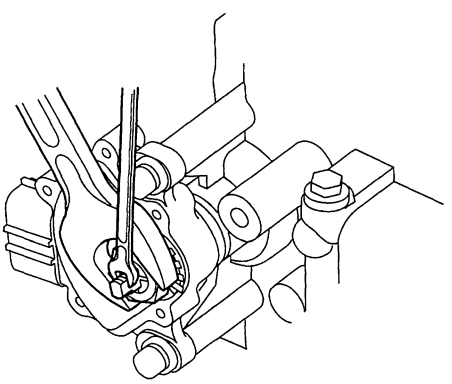

18. Tighten the bolts to 12 N·m (1.2 kgf·m, 8.7 lbf·ft) securing the transmission range switch.

(cont'd)

Protected by AR



## Transmission Range Switch Replacement (cont'd)

19. Install the control lever (A), spring washer (B), lock washer (C), and locknut (D) on the control shaft (E).

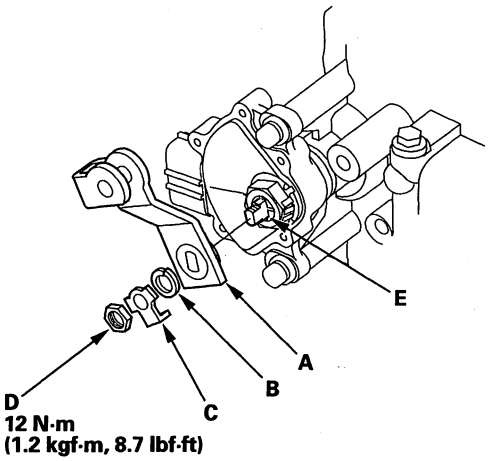


20. Apply molybdenum grease to the bore hole of the synthetic resin bushing in the shift cable end, and attach the shift cable end to the control lever, then insert the control pin into the control lever hole through the shift cable end, and secure the control pin with the spring clip/washer.

21. Secure the shift cable bracket with the nuts.

22. Install the intake air duct, air cleaner housing, and intercooler cover.

23. Install the battery base.

24. Install the battery tray, battery, battery cover, and battery hold-down bracket, then connect battery terminals.

25. Turn the ignition switch ON (II). Move the shift lever through all positions, and check the transmission range switch synchronization with the A/T gear position indicator.

26. Check that the engine will start in the P and N positions, and will not start in any other shift lever position.

27. Check that the back-up lights come on when the shift lever is in the R position.

28. Allow all four wheels to rotate freely, then start the engine, and check the shift lever operation.

29. Enter the audio system and navigation system (if equipped) anti-theft codes, then enter the audio presets, and set the clock.

30. Do the power window control unit reset procedure (see page 22-213).



BACK

Protected by AR

## Paddle Shifter + (Upshift Switch) Circuit Troubleshooting

SRS components are located in this area. Review the SRS component locations (see page 24-12), and the precautions and procedures (see page 24-14) in the SRS before doing repair or service.

1. Remove the steering wheel (see page 17-22).

2. Check for continuity between steering switch harness 20P connector terminals No. 16 and No. 8 while pressing paddle shifter + (upshift switch) and when the paddle shifter + is released.

**STEERING SWITCH HARNESS 20P CONNECTOR**

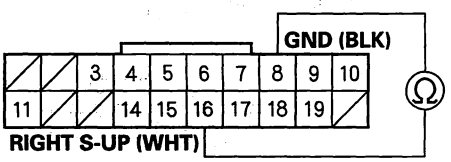


Wire side of female terminals

*Is there continuity while pressing the paddle shifter + (upshift switch) and no continuity when the paddle shifter + is released?*

**YES**—Go to step 5.

**NO**—Go to step 3.

3. Disconnect the paddle shifter + (upshift switch) connector.

4. Check for continuity between paddle shifter + (upshift switch) connector terminals while pressing the paddle shifter + and when the paddle shifter + is released.

**PADDLE SHIFTER + (UPSHIFT SWITCH) CONNECTOR**

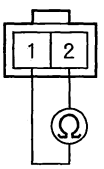


Terminal side of male terminals

*Is there continuity while pressing the paddle shifter + and no continuity when the paddle shifter + is released?*

**YES**—Replace the steering switch harness. ■

**NO**—Replace the paddle shifter + (upshift switch) (see page 14-300). ■

5. Remove the cable reel (see page 24-158).

6. Check for continuity cable reel 20P connector terminal No. 5 and body ground.

**CABLE REEL 20P CONNECTOR**

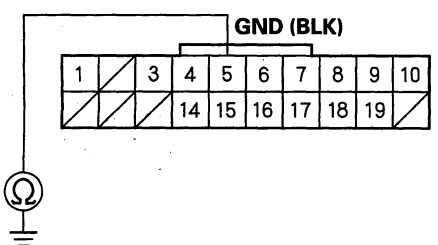


Wire side of female terminals

*Is there continuity?*

**YES**—Go to step 7.

**NO**—Repair open in the wire between cable reel 20P connector terminal No. 5 and ground (G101), or repair poor ground (G101). ■

(cont'd)

Protected by AR



## Paddle Shifter + (Upshift Switch) Circuit Troubleshooting (cont'd)

7. Check for continuity between cable reel 20P connector terminal No. 16 and body ground.

**CABLE REEL 20P CONNECTOR**

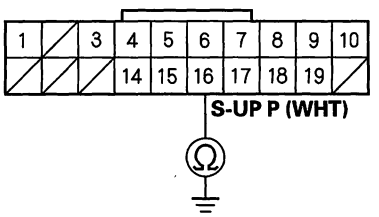


Wire side of female terminals

*Is there continuity?*

**YES**—Repair short in the wire between cable reel 20P connector terminal No. 16 and PCM connector terminal B16.■

**NO**—Go to step 8.

8. Turn the ignition switch ON (II), and shift to the S position.

9. Measure the voltage between cable reel 20P connector terminal No. 5 and No. 16.

**CABLE REEL 20P CONNECTOR**

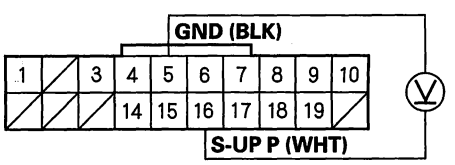


Wire side of female terminals

*Is there battery voltage?*

**YES**—Replace the cable reel (see page 24-158).■

**NO**—Go to step 10.

10. Turn the ignition switch OFF.

11. Jump the SCS line with the HDS.

12. Disconnect PCM connector B (44P).

13. Check for continuity between PCM connector terminal B16 and cable reel 20P connector terminal No. 16.

**CABLE REEL 20P CONNECTOR**

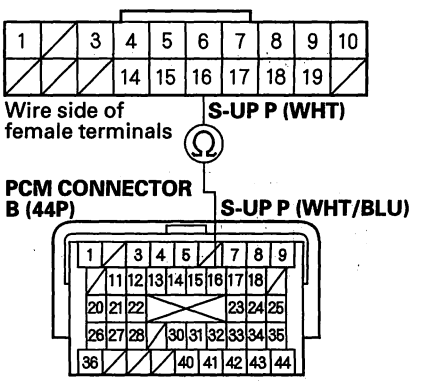


Terminal side of female terminals

*Is there continuity?*

**YES**—Check for loose or poor connections at PCM connector terminal B16. If the connection is OK, substitute a known-good PCM and recheck.■

**NO**—Repair open in the wire between PCM connector terminal B16 and the cable reel 20P connector.■



BACK

Protected by AR

# Paddle Shifter - (Downshift Switch) Circuit Troubleshooting

SRS components are located in this area. Review the SRS component locations (see page 24-12), and the precautions and procedures (see page 24-14) in the SRS before doing repair or service.

1. Remove the steering wheel (see page 17-22).

2. Check for continuity between steering switch harness 20P connector terminals No. 17 and No. 8 while pressing paddle shifter — (downshift switch) and when the paddle shifter — is released.

**STEERING SWITCH HARNESS 20P CONNECTOR**

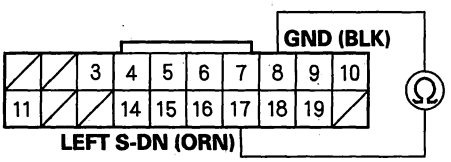


Wire side of female terminals

*Is there continuity while the pressing paddle shifter — (downshift switch) and no continuity when the paddle shifter — is released?*

**YES**—Go to step 5.

**NO**—Go to step 3.

3. Disconnect the paddle shifter — (downshift switch) connector.

4. Check for continuity between paddle shifter — (downshift switch) connector terminals while pressing the paddle shifter — and when the paddle shifter — is released.

**PADDLE SHIFTER — (DOWNSHIFT SWITCH) CONNECTOR**

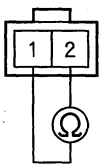


Terminal side of male terminals

*Is there continuity while pressing the paddle shifter — and no continuity when the paddle shifter — is released?*

**YES**—Replace the steering switch harness.■

**NO**—Replace the paddle shifter — (downshift switch) (see page 14-302).■

5. Remove the cable reel (see page 24-158).

6. Check for continuity cable reel 20P connector terminal No. 5 and body ground.

**CABLE REEL 20P CONNECTOR**

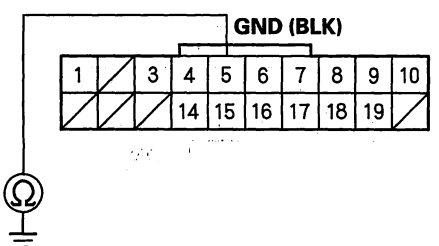


Wire side of female terminals

*Is there continuity?*

**YES**—Go to step 7.

**NO**—Repair open in the wire between cable reel 20P connector terminal No. 5 and ground (G101), or repair poor ground (G101).■

(cont'd)

Protected by AR



## Paddle Shifter - (Downshift Switch) Circuit Troubleshooting (cont'd)

7. Check for continuity between cable reel 20P connector terminal No. 17 and body ground.

**CABLE REEL 20P CONNECTOR**

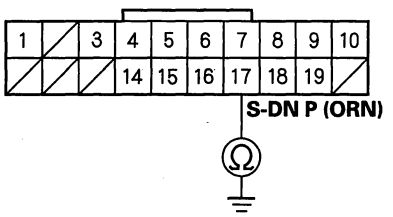


Wire side of female terminals

*Is there continuity?*

**YES**—Repair short in the wire between cable reel 20P connector terminal No. 17 and PCM connector terminal B40.■

**NO**—Go to step 8.

8. Turn the ignition switch ON (II), and shift to the S position.

9. Measure the voltage between cable reel 20P connector terminal No. 5 and No. 17.

**CABLE REEL 20P CONNECTOR**

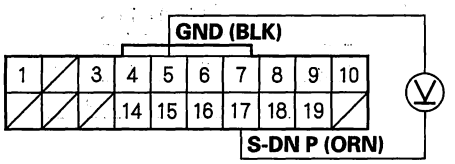


Wire side of female terminals

*Is there about 5 V?*

**YES**—Replace the cable reel (see page 24-158).■

**NO**—Go to step 10.

10. Turn the ignition switch OFF.

11. Jump the SCS line with the HDS.

12. Disconnect PCM connector B (44P).

13. Check for continuity between PCM connector terminal B40 and cable reel 20P connector terminal No. 17.

**CABLE REEL 20P CONNECTOR**

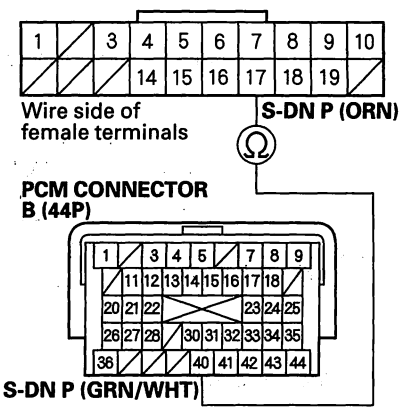


Terminal side of female terminals

*Is there continuity?*

**YES**—Check for loose or poor connections at PCM connector terminal B40. If the connection is OK, substitute a known-good PCM and recheck.■

**NO**—Repair open in the wire between PCM connector terminal B40 and the cable reel 20P connector.■



BACK

Protected by AR

## Paddle Shifter + (Upshift Switch) Test

SRS components are located in this area. Review the SRS component locations (see page 24-12), and the precautions and procedures (see page 24-14) in the SRS before doing repair or service.

1. Remove the steering wheel (see page 17-22).

2. Check the paddle shifter + (upshift switch) for continuity between steering switch harness 20P connector terminals No. 16 and No. 8. There should be continuity while pressing the paddle shifter + (upshift switch), and no continuity when the paddle shifter + is released.

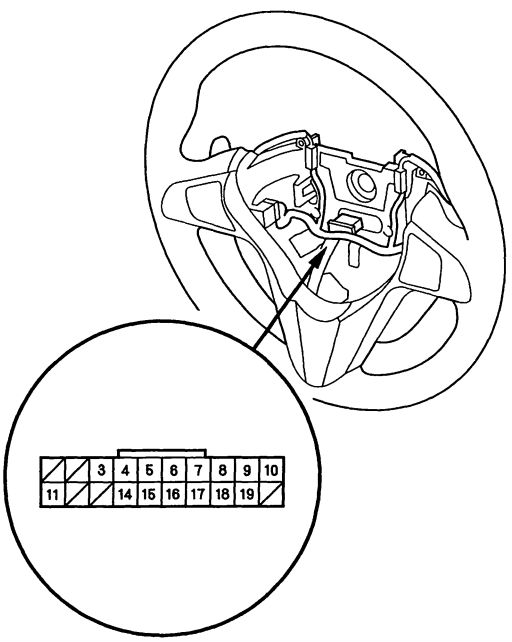


Wire side of female terminals

3. The paddle shifter + (upshift switch) test is finished if the test result is OK.
   If the paddle shifter + works incorrectly at the 20P connector, test the paddle shifter + at the connector.

4. Remove paddle shifter + (upshift switch) connector from its holder, and disconnect the connector.

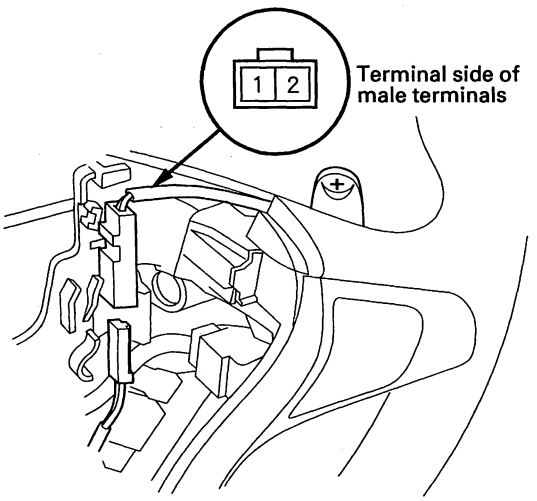


5. Check the paddle shifter + (upshift switch) for continuity between the paddle shifter + (upshift switch) connector terminals while pressing the paddle shifter + and when the paddle shifter + is released.
   There should be continuity while pressing the paddle shifter +, and no continuity when the paddle shifter + is released.

6. Replace the paddle shifter + (upshift switch) if the paddle shifter + works incorrectly.

7. Replace the steering switch harness if the switch is OK.

Protected by AR



## Paddle Shifter + (Upshift Switch) Replacement

SRS components are located in this area. Review the SRS component locations (see page 24-12), and the precautions and procedures (see page 24-14) in the SRS before doing repair or service.

1. Remove the steering wheel (see page 17-22).

2. Remove the four screws (A) securing the steering wheel rear cover (B), then remove the steering wheel rear cover.

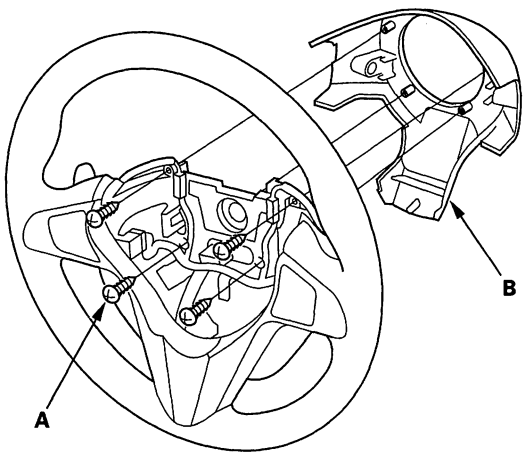


3. Disconnect the paddle shifter + (upshift switch) connector. Remove the screw securing the paddle shifter + (upshift switch), and remove the paddle shifter + (upshift switch).

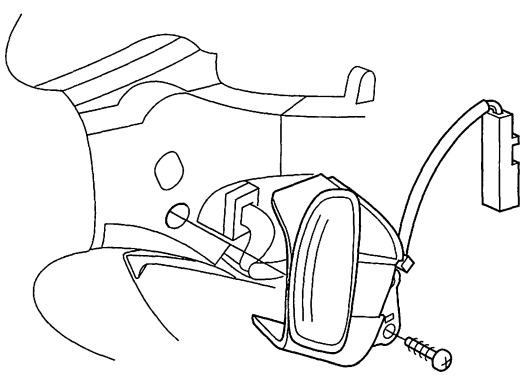

4. Install the new paddle shifter + (upshift switch) on the steering wheel.

5. Connect the paddle shifter + (upshift switch) connector securely, and install the connector in the connector holder.

6. Install the steering wheel rear cover, and secure the rear cover with the screws.

7. Install the steering wheel (see page 17-24).



BACK

Protected by AR

## Paddle Shifter - (Downshift Switch) Test

SRS components are located in this area. Review the SRS component locations (see page 24-12), and the precautions and procedures (see page 24-14) in the SRS before doing repair or service.

1. Remove the steering wheel (see page 17-22).

2. Check the paddle shifter — (downshift switch) for continuity between steering switch harness 20P connector terminals No. 17 and No. 8.
   There should be continuity while pressing the paddle shifter — (downshift switch), and no continuity when the paddle shifter — is released.

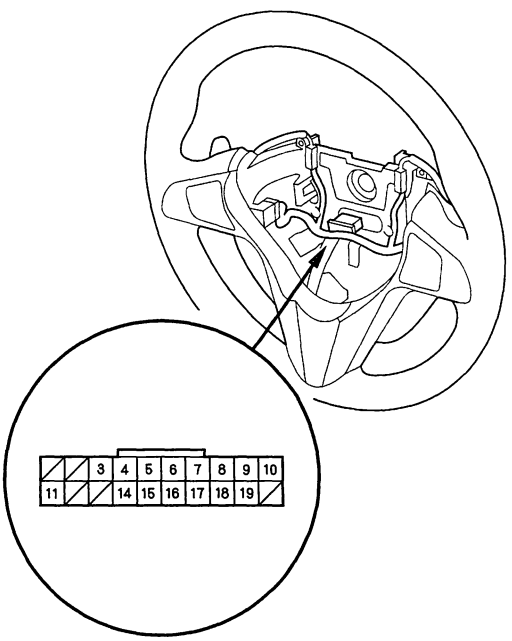

Wire side of female terminals

3. The paddle shifter — (downshift switch) test is finished if the test result is OK.
   If the paddle shifter — works incorrectly at the 20P connector, test the paddle shifter — at the connector.

4. Remove paddle shifter — (downshift switch) connector from its holder, and disconnect the connector.

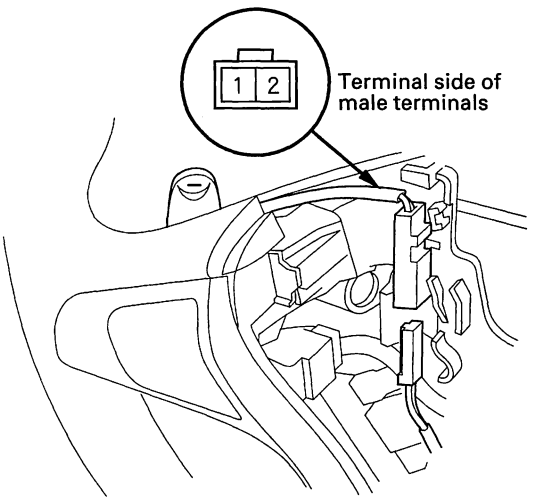


5. Check the paddle shifter — (downshift switch) for continuity between the paddle shifter — (downshift switch) connector terminals while pressing the paddle shifter — and when the paddle shifter — is released.
   There should be continuity while pressing the paddle shifter —, and no continuity when the paddle shifter — is released.

6. Replace the paddle shifter — (downshift switch) if the paddle shifter — works incorrectly.

7. Replace the steering switch harness if the switch is OK.

Protected by AR



## Paddle Shifter - (Downshift Switch) Replacement

SRS components are located in this area. Review the SRS component locations (see page 24-12), and the precautions and procedures (see page 24-14) in the SRS before doing repair or service.

1. Remove the steering wheel (see page 17-22).

2. Remove the four screws (A) securing the steering wheel rear cover (B), then remove the steering wheel rear cover.

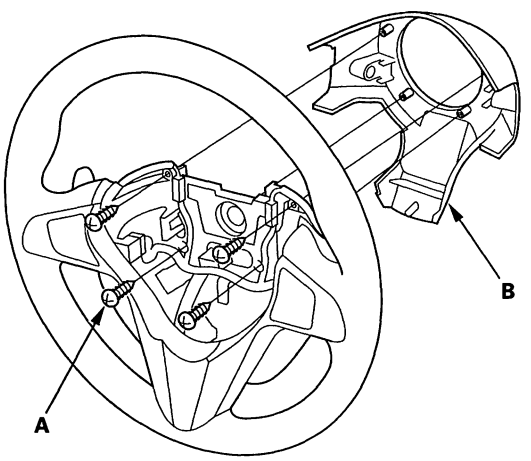


3. Disconnect the paddle shifter — (downshift switch) connector. Remove the screw securing the paddle shifter — (downshift switch), and remove the paddle shifter — (downshift switch).

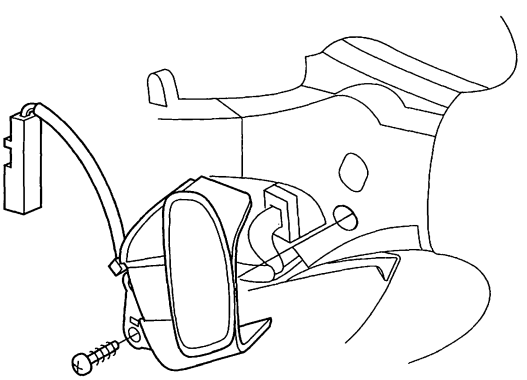

4. Install the new paddle shifter — (downshift switch) on the steering wheel.

5. Connect the paddle shifter — (downshift switch) connector securely, and install the connector in the connector holder.

6. Install the steering wheel rear cover, and secure the rear cover with the screws.

7. Install the steering wheel (see page 17-24).



BACK

Protected by AR



## Component Location Index

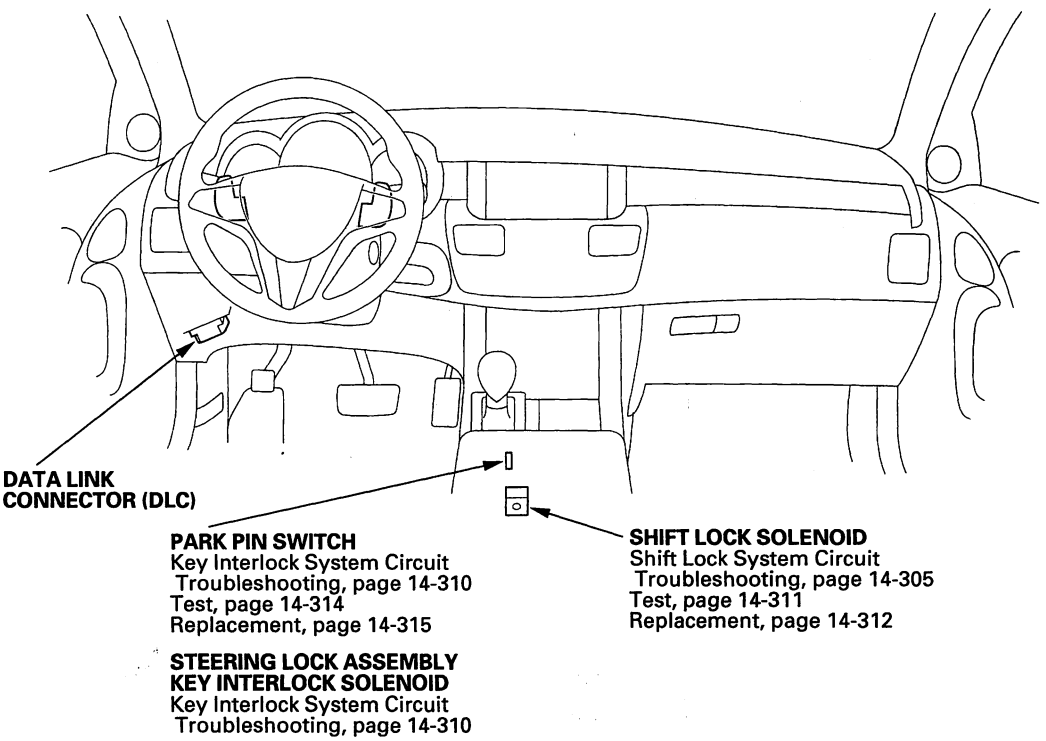

Protected by AR

# A/T Interlock System

## Circuit Diagram

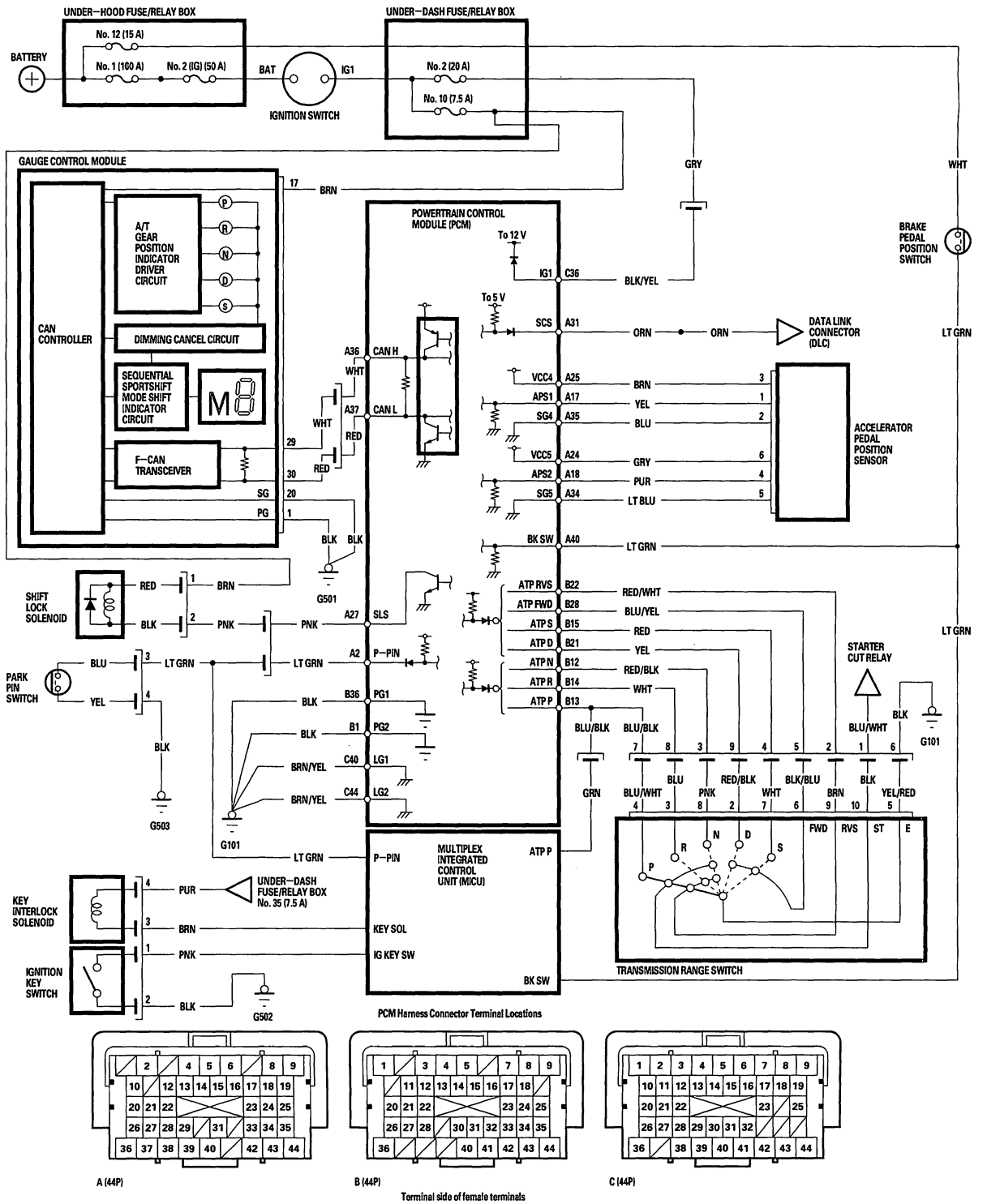




BACK

Protected by AR

## Shift Lock System Circuit Troubleshooting

1. Connect the HDS to the DLC.

2. Choose Shift Lock Solenoid Test in the Miscellaneous Test Menu, and check that the shift lock solenoid operates with the HDS.

   NOTE: If the HDS does not communicate with the PCM, troubleshoot the DLC circuit (see page 11-229).

   *Does the shift lock solenoid work properly?*

   **YES**—Go to step 14.

   **NO**—Go to step 3.

3. Remove the driver's center console lower cover (see step 4 on page 20-93).

4. Disconnect the shift lock solenoid connector.

5. Turn the ignition switch ON (II).

6. Measure the voltage between shift lock solenoid connector terminal No. 1 and body ground.

**SHIFT LOCK SOLENOID CONNECTOR**

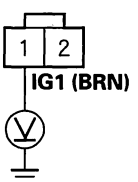


Wire side of female terminals

*Is there battery voltage?*

**YES**—Go to step 7.

**NO**—Check for a blown No. 10 (7.5 A) fuse in the under-dash fuse/relay box. If the fuse is OK, repair open or short in the wire between the shift lock solenoid connector and the under-dash fuse/relay box.■

7. Shift the shift lever into the P position, and press the brake pedal. Do not press the accelerator.

8. Measure the voltage between shift lock solenoid connector terminals No. 1 and No. 2 while pressing the brake pedal.

**SHIFT LOCK SOLENOID CONNECTOR**

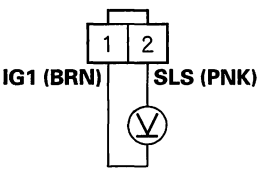


Wire side of female terminals

*Is there battery voltage?*

**YES**—Go to step 9.

**NO**—Go to step 10.

(cont'd)

Protected by AR



## Shift Lock System Circuit Troubleshooting (cont'd)

9. Release the brake pedal, and measure the voltage between shift lock solenoid connector terminals No. 1 and No. 2. The shift lever must be in the P position.

**SHIFT LOCK SOLENOID CONNECTOR**

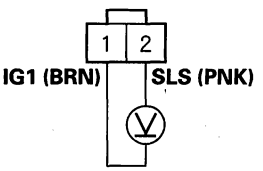


Wire side of female terminals

*Is there battery voltage?*

**YES**—Repair short in the wire between PCM connector terminal A27 and the shift lock solenoid. ■

**NO**—Check the shift lock mechanism. If the mechanism is OK, replace the shift lock solenoid (see page 14-312). ■

10. Turn the ignition switch OFF.

11. Jump the SCS line with the HDS.

12. Disconnect PCM connector A (44P).

13. Check for continuity between PCM connector terminal A27 and shift lock solenoid connector terminal No. 2.

**SHIFT LOCK SOLENOID CONNECTOR** **PCM CONNECTOR A (44P)**

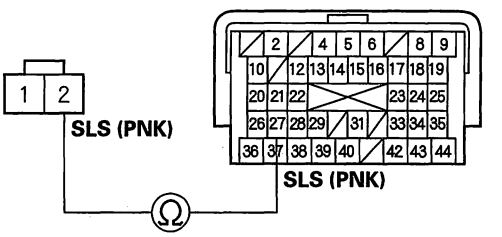


Wire side of female terminals

Terminal side of female terminals

*Is there continuity?*

**YES**—Substitute a known-good PCM and recheck. ■

**NO**—Repair open in the wire between PCM connector terminal A27 and the shift lock solenoid connector. ■



BACK

Protected by AR

14. Press the brake pedal.

    *Are the brake lights ON?*

    **YES**—Go to step 14.

    **NO**—Repair faulty brake light circuit.■

15. Turn the ignition switch OFF.

16. Jump the SCS line with the HDS.

17. Disconnect PCM connector A (44P).

18. Measure the voltage between PCM connector terminal A40 and body ground while pressing the brake pedal and when the brake pedal is released.

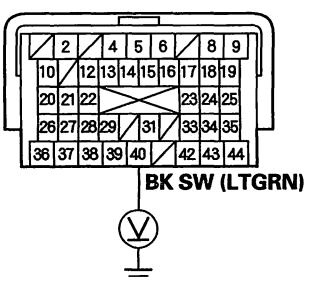


Terminal side of female terminals

*Is there battery voltage while the brake pedal is pressed, and no voltage when the pedal is released?*

**YES**—Go to step 20.

**NO**—Go to step 19.

19. Check for continuity between PCM connector terminal A40 and brake pedal position switch 4P connector terminal No. 2.

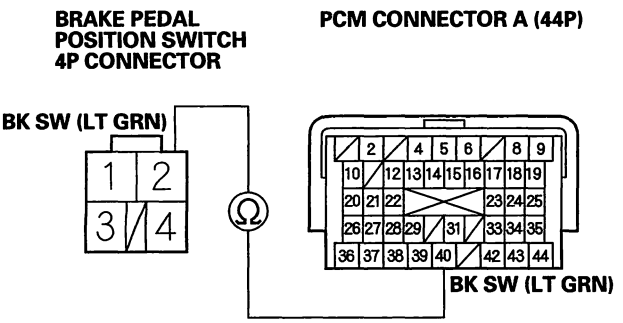


Wire side of female terminals

Terminal side of female terminals

*Is there continuity?*

**YES**—Substitute a known-good PCM and recheck.■

**NO**—Repair open in the wire between PCM connector terminal A40 and the brake pedal position switch.■

(cont'd)

Protected by AR



## Shift Lock System Circuit Troubleshooting (cont'd)

20. Connect PCM connector A (44P).

21. Disconnect the transmission range switch connector.

22. Turn the ignition switch ON (II).

23. Measure the voltage between transmission range switch connector terminals No. 4 and No. 5.

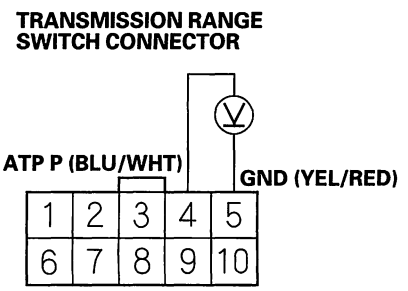


Wire side of female terminals

*Is there about 5 V?*

**YES**—Go to step 28.

**NO**—Go to step 24.

24. Turn the ignition switch OFF.

25. Disconnect PCM connector B (44P).

26. Check for continuity between PCM connector terminal B13 and body ground.

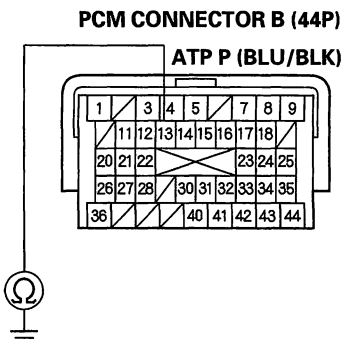


Terminal side of female terminals

*Is there continuity?*

**YES**—Repair short in the wire between PCM connector terminal B13 and the transmission range switch connector. ■

**NO**—Go to step 27.

27. Check for continuity between PCM connector terminal B13 and transmission range switch connector terminal No. 4.

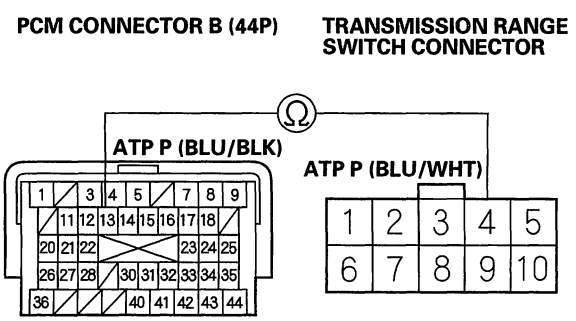


Terminal side of female terminals

Wire side of female terminals

*Is there continuity?*

**YES**—Go to step 28.

**NO**—Repair open in the wire between PCM connector terminal B13 and the transmission range switch connector. ■



BACK

Protected by AR

28. Check for continuity between transmission range switch connector terminal No. 5 and body ground.

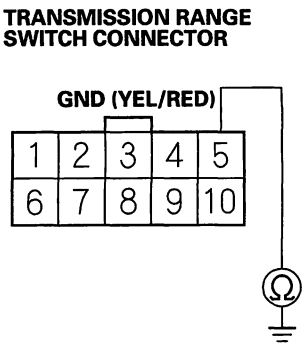


Wire side of female terminals

*Is there continuity?*

**YES**—Substitute a known-good PCM and recheck.■

**NO**—Repair open in the wire between transmission range switch connector terminal No. 5 and ground (G101), or repair poor ground (G101).■

29. Test the transmission range switch (see page 14-290).

*Is the switch OK?*

**YES**—Go to step 30.

**NO**—Replace the transmission range switch (see page 14-292).■

30. Connect the HDS to the DLC.

31. Check the accelerator pedal position sensor 1 in the data list with the HDS. Do not press the accelerator.

*Is the accelerator pedal position sensor 1 opening 11 % and above, or the sensor 1 voltage 0.90 V and above?*

**YES**—Check the APP sensor (see page 11-294).■

**NO**—Substitute a known-good PCM and recheck.■

Protected by AR



## Key Interlock System Circuit Troubleshooting

SRS components are located in this area. Review the SRS component locations (see page 24-12), and the precautions and procedures (see page 24-14) in the SRS before doing repair or service.

1. Turn the ignition switch to ACC (I). The shift lever must be in the P position.

2. Disconnect the steering lock assembly connector.

3. Check if the ignition switch can be turned to the LOCK (0) position.

   *Can the ignition switch be turned the LOCK (0) position?*

   **YES**—Go to step 4.

   **NO**—Replace the ignition key cylinder/steering lock assembly (see page 22-66).■

4. Turn the ignition switch OFF.

5. Move the shift lever out of the P position.

6. Check for continuity between steering lock assembly connector terminal No. 3 and body ground.

**STEERING LOCK ASSEMBLY CONNECTOR**

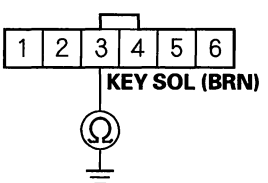


Wire side of female terminals

*Is there continuity?*

**YES**—Repair short in the wire between the key interlock solenoid and the MICU.■

**NO**—Go to step 7.

7. Remove the driver's center console lower cover (see step 4 on page 20-93).

8. Check for continuity between park pin switch/A/T gear position indicator panel light connector terminal No. 1 and body ground.

**PARK PIN SWITCH/ A/T GEAR POSITION INDICATOR PANEL LIGHT CONNECTOR**

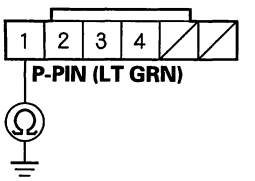


Wire side of female terminals

*Is there continuity?*

**YES**—Repair short in the wire between park pin switch/A/T gear position indicator panel light connector terminal No. 1 and the MICU.■

**NO**—Go to step 9.

9. Shift the shift lever into the P position.

10. Check for continuity between park pin switch/A/T gear position indicator panel light connector terminals No. 1 and No. 2. Do not push the shift lever button.

**PARK PIN SWITCH/ A/T GEAR POSITION INDICATOR PANEL LIGHT CONNECTOR**

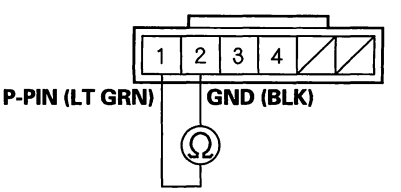


Terminal side of male terminals

*Is there continuity?*

**YES**—Replace the park pin switch (see page 14-315).■

**NO**—Go to step 11.



BACK

Protected by AR

11. Disconnect the F (34P) connector from the under-dash fuse/relay box.

12. Turn the ignition switch ON (II).

13. Measure the voltage between under-dash fuse/relay box F (34P) connector terminal No. 27 and body ground.

**UNDER-DASH FUSE/RELAY BOX F (34P) CONNECTOR**

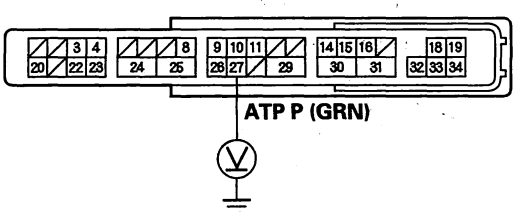


Wire side of female terminals

*Is there about 5 V when the shift lever is in any position other than the P position, and no voltage when the shift lever is in the P position?*

**YES**—Substitute a known-good MICU and recheck. ■

**NO**—Repair open or short in the wire between MICU and the transmission range switch. ■

## Shift Lock Solenoid Test

1. Connect the HDS to the DLC (A).

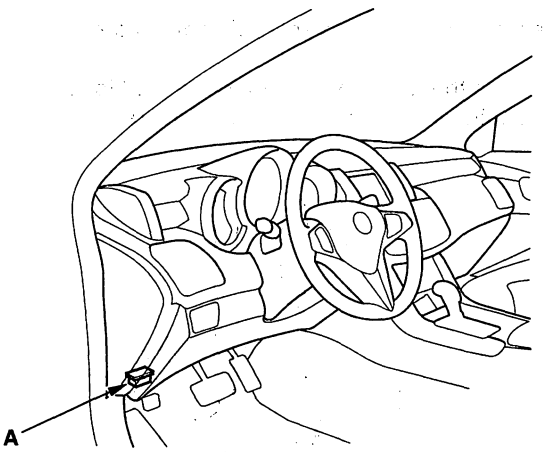


2. Choose Shift Lock Solenoid Test in the Miscellaneous Test Menu, and check that the shift lock solenoid operates with the HDS.

   NOTE: If the HDS does not communicate with the PCM, troubleshoot the DLC circuit (see page 11-229).

3. Make sure that the shift lever can be moved out of the P position when Shift Lock Solenoid: ON. Move the shift lever back in the P position, and make sure it locks with Shift Lock Solenoid: OFF.

4. Make sure that the shift lock releases when the shift lock release is pushed, and make sure it locks when the shift lock release is released.

5. If the shift lock solenoid does not work properly, troubleshoot shift lock system (see page 14-305).

BACK

Protected by AR



## Shift Lock Solenoid Replacement

1. Remove the shift lever (see page 14-275).
2. Remove the shift lock solenoid connector.
3. Release the lock tabs retaining the shift lock solenoid using thin blade screwdrivers.

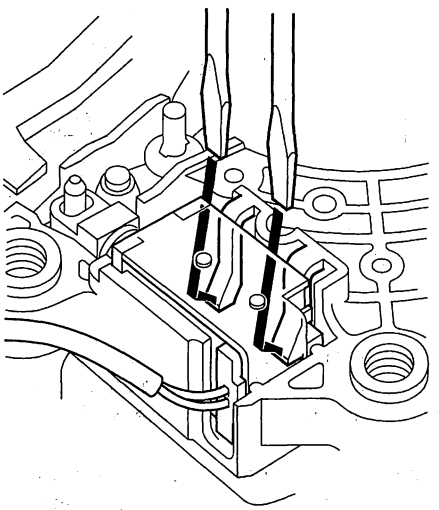

4. Insert a 6 mm pin (A) into the guide hole (B), and push the shift lock solenoid (C) out.

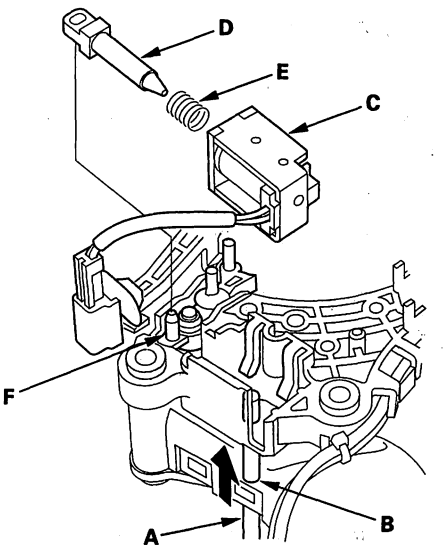


5. Replace the shift lock solenoid, solenoid plunger (D), and plunger spring (E) assembly.
6. Apply silicone grease to the tip (F) of the shift lock stop and solenoid plunger.
7. Install the shift lock solenoid by aligning the joint of the shift lock solenoid plunger with the tip of the shift lock stop, then push the shift lock solenoid into the shift lever securely.
8. Install the shift lock solenoid connector.
9. Install the shift lever (see page 14-276).



BACK

Protected by AR

## Shift Lock Stop, Shift Lock Stop Cushion Replacement

1. Remove the shift lock solenoid (see page 14-312).
2. Remove the shift lock stop (A) and stop cushion (B), and replace the shift lock stop or stop cushion.

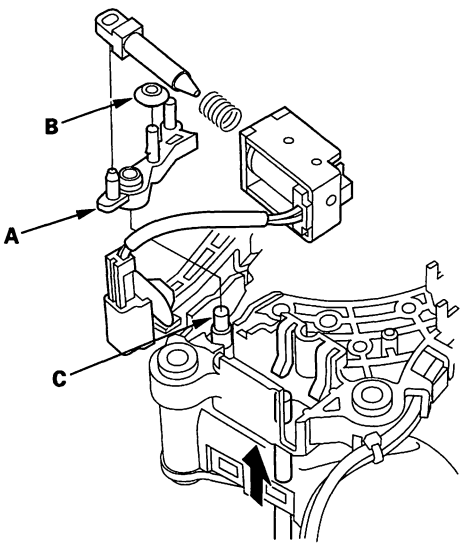


3. Install the shift lock stop cushion on the shift lock stop.
4. Apply silicone grease to the pin (C) on the shift lever bracket base, and install the shift lock stop over the pin.
5. Install the shift lock solenoid (see page 14-312).

## Shift Lock Release and Release Spring Replacement

1. Remove the center console panel (see page 20-92).
2. Remove the shift lock release (A) and release spring (B).

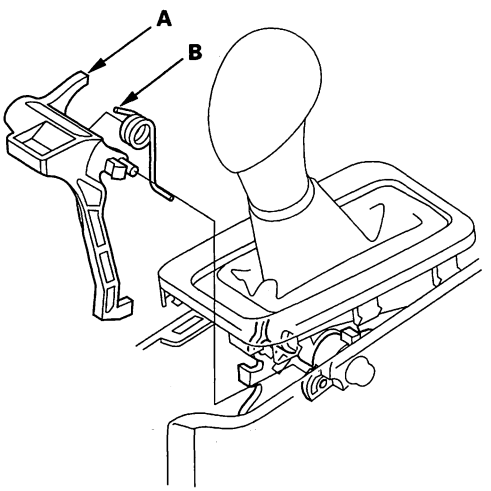


3. Install the shift lock release and release spring on the shift lever.
4. Install the center console panel (see page 20-92).

Protected by AR



## Park Pin Switch Test

1. Remove the driver's center console lower cover (see step 4 on page 20-93).

2. Disconnect park pin switch/A/T gear position indicator panel light connector.

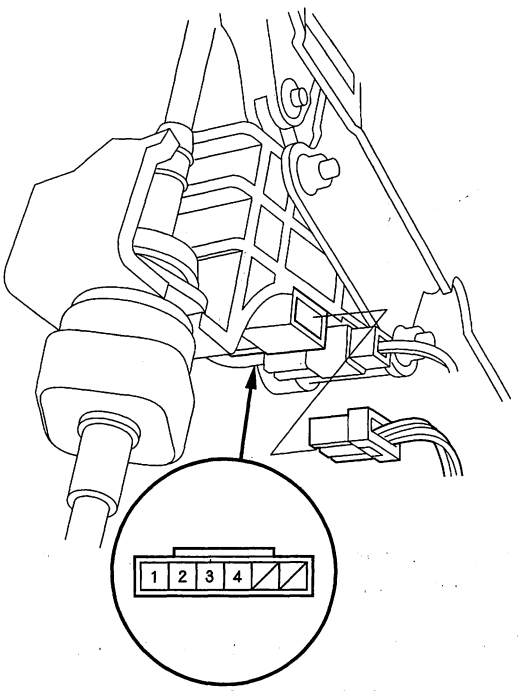


Terminal side of male terminals

3. Shift the shift lever into the P position, and check for continuity between park pin switch/A/T gear position indicator panel light connector terminals No. 1 and No. 2.
   There should be no continuity.

4. Shift out of the P position, and check for continuity between connector terminals No. 1 and No. 2.
   There should be continuity.

5. If the park pin switch tests OK, connect the connector and install the console lower cover (see step 4 on page 20-93).
   If the park pin switch fails the test, replace the park pin switch (see page 14-315).



BACK

Protected by AR

## Park Pin Switch Replacement

1. Remove the shift lever (see page 14-275).

2. Move the A/T gear position indicator panel up from the shift lever, and remove the A/T gear position indicator panel light bulb socket (A) from the indicator panel (B).

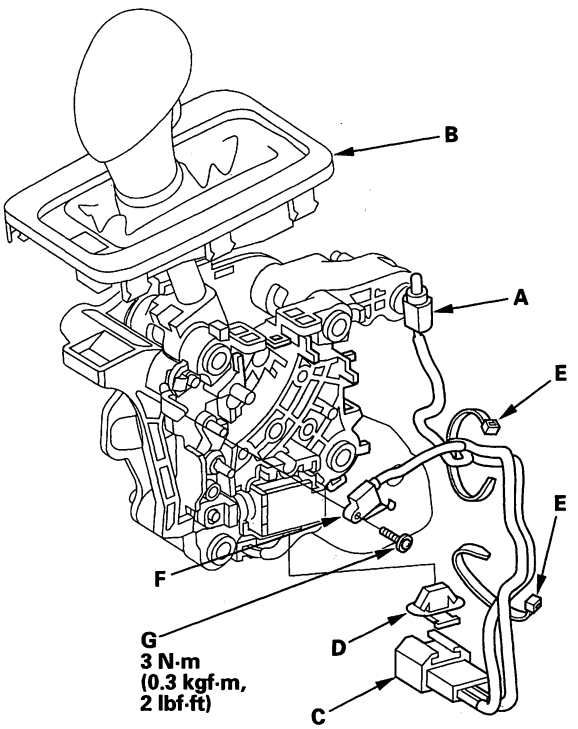


3. Remove the park pin switch/A/T gear position indicator panel light connector (C), then remove the connector clamp (D) from the connector.

4. Remove the harness bands (E), and remove the park pin switch (F) and A/T gear position indicator panel light bulb socket.

5. Install the park pin switch, and secure the switch with the new screw (G).

6. Install the connector clamp on the park pin switch/ A/T gear position indicator panel light connector, and install the connector on the shift lever.

7. Route the park pin switch harness and indicator panel light harness, and secure the harnesses with the band (A); tie the indicator panel light harness at white tape (B) with the band.

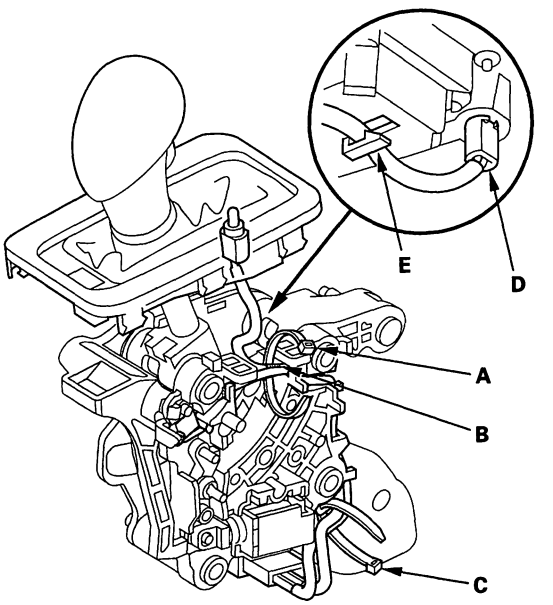


8. Secure the harnesses with the band (C).

9. Install the indicator panel light socket (D) in the indicator panel, and install the harness in the clamp (E).

10. Install the indicator panel on the shift lever.

11. Install the shift lever (see page 14-276).

Protected by AR



## Transmission Disassembly

**Special Tools Required**
Mainshaft holder 07GAB-PF50101

1. Remove the ATF dipstick (A) and the dipstick tube (B).

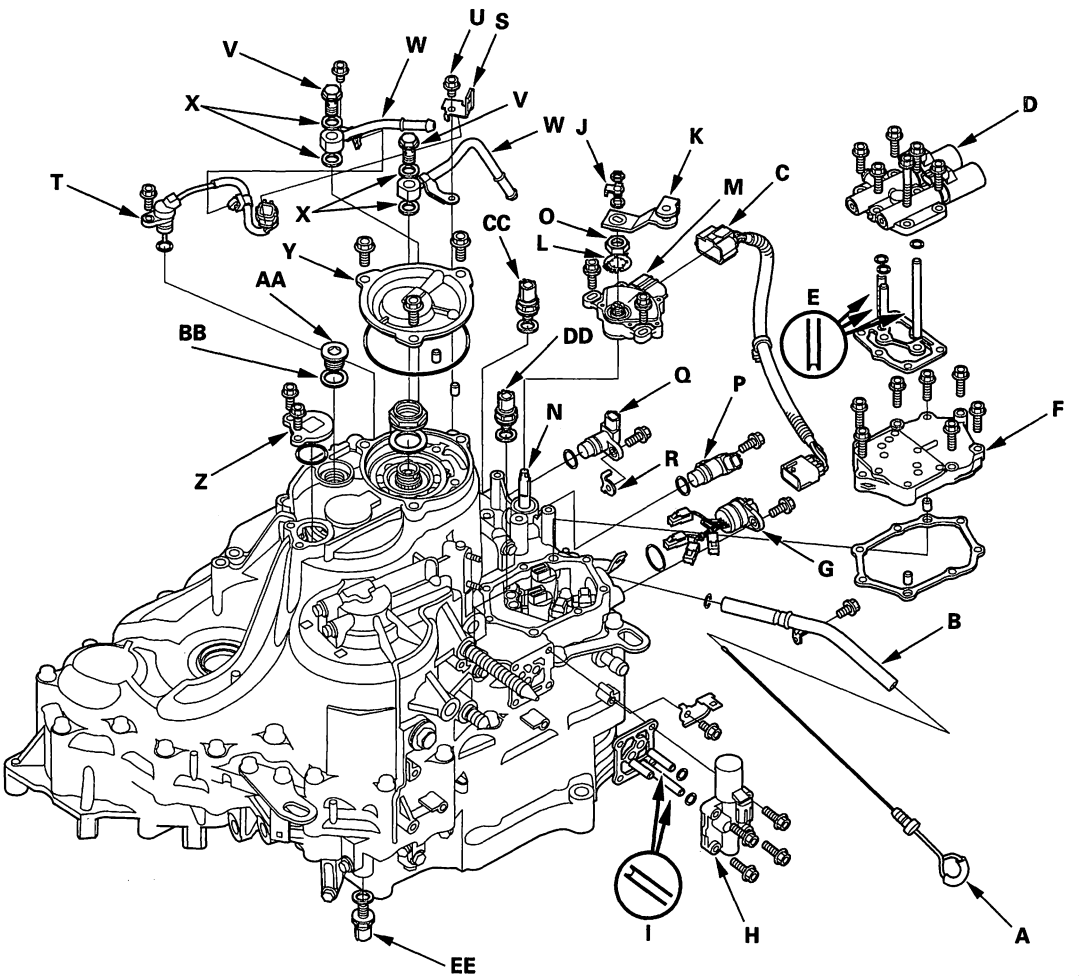


2. Disconnect the transmission range switch harness connector, and remove the transmission range switch harness (C).

3. Remove A/T clutch pressure control solenoid valve A and B (D) (six bolts), ATF feed pipes (E) (three), O-rings (three), and gasket.

4. Remove the solenoid valve cover (F) (seven bolts), dowel pins (two), and gasket.

5. Disconnect the solenoid valve connectors, then remove the solenoid harness connector (G).

6. Remove A/T clutch pressure control solenoid valve C (H) (four bolts), ATF feed pipes (I) (three), O-rings (two), and gasket.



BACK

Protected by AR

7. Pry up the lock tabs of the lock washer (K) on the transmission range switch (L), hold the selector control shaft (M) with a 6.0 mm wrench, and loosen the locknut (N).

8. Remove the locknut and lock washer, then remove the transmission range switch (two bolts).

9. Remove the input shaft (mainshaft) speed sensor (O), output shaft (countershaft) speed sensor (P), and sensor washer (Q).

10. Remove the ATF temperature sensor connector from the connector bracket (R) and the harness clamp from the clamp bracket, then remove the ATF temperature sensor (S).

11. Remove the connector bracket (R) and 6.0 mm bolt (T), then remove the line bolts (U), ATF cooler lines (V), and sealing washers (W).

12. Remove the end cover (X) (three bolts), snap ring cap (Y) (two bolts), sealing plug (Z), and washer (AA).

13. Remove the 3rd clutch transmission fluid pressure switch (BB) and sealing washer.

14. Remove the 4th clutch transmission fluid pressure switch (CC) and sealing washer.

15. Remove the 2nd clutch transmission fluid pressure switch (DD) and sealing washer.

16. Slip the mainshaft holder onto the mainshaft.

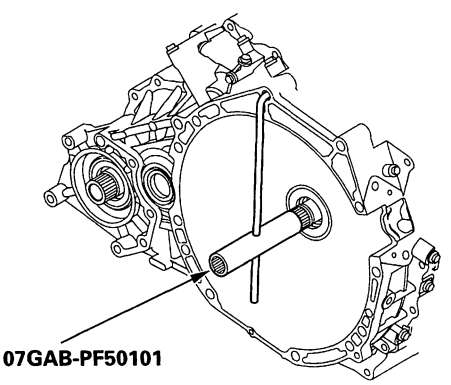


17. Cut the lock tab (A) off the mainshaft locknut (B) using a chisel (C).

NOTE: keep all of the chiseled particles out of the transmission.

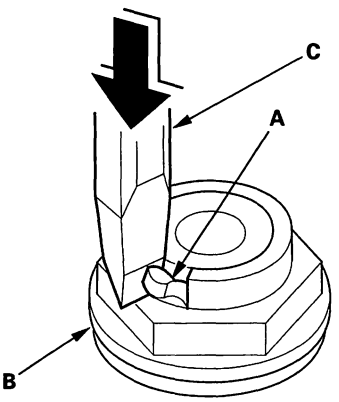


18. Remove the locknut (A) from the mainshaft (B).

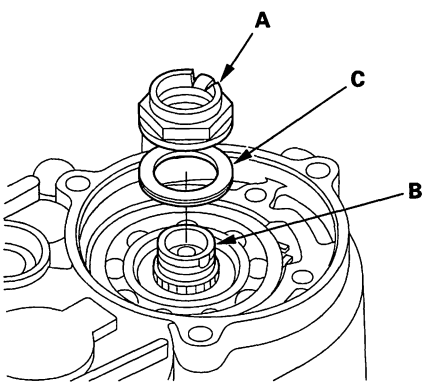


19. Pry the lock washer (C), and remove it.

(cont'd)

Protected by AR



## Transmission Disassembly (cont'd)

20. Remove the transmission housing mounting bolts (23 bolts), special bolt (A), transmission hanger (B) and bolt (C), and ground terminal bracket (D).

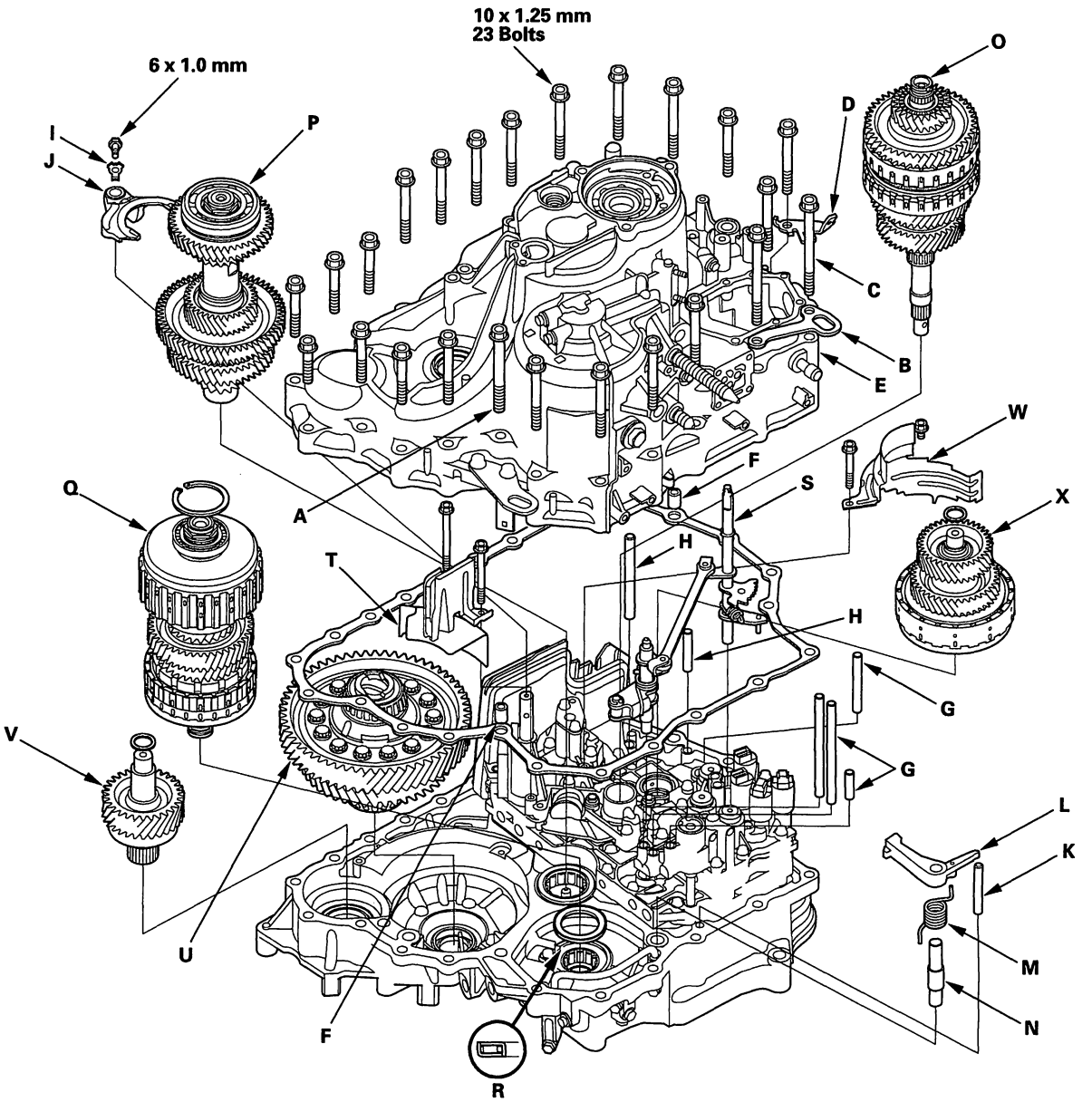




BACK

Protected by AR

21. While expanding the snap ring of the countershaft bearing using the snap ring pliers, lift the transmission housing.

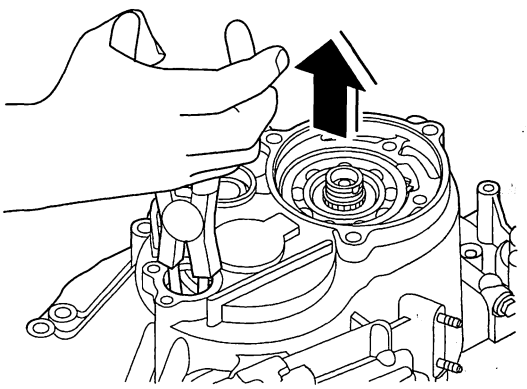

22. Release the pliers, and remove the transmission housing (E), two dowel pins (F), and gasket.

23. Remove the ATF feed pipes (G) (four) from the accumulator body.

24. Remove the ATF feed pipes (H) (two) from the torque converter housing.

25. Remove the mainshaft holder from the mainshaft.

26. Pry the lock tab of the lock washer (I) on the shift fork (J), then remove the bolt and lock washer.

27. Unlock the detent spring from the detent arm.

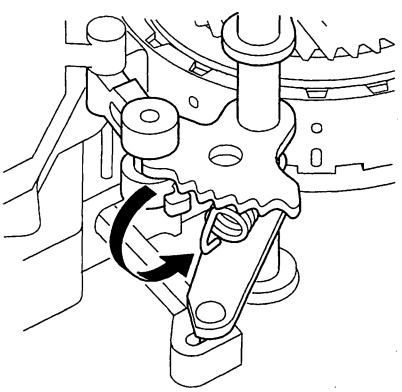

28. Remove the park pawl stop (K), park pawl (L), pawl spring (M), and pawl shaft (N).

29. Remove the mainshaft (O), countershaft (P), shift fork (J), and secondary shaft (Q) together, and remove the needle bearing (R) from the torque converter housing.

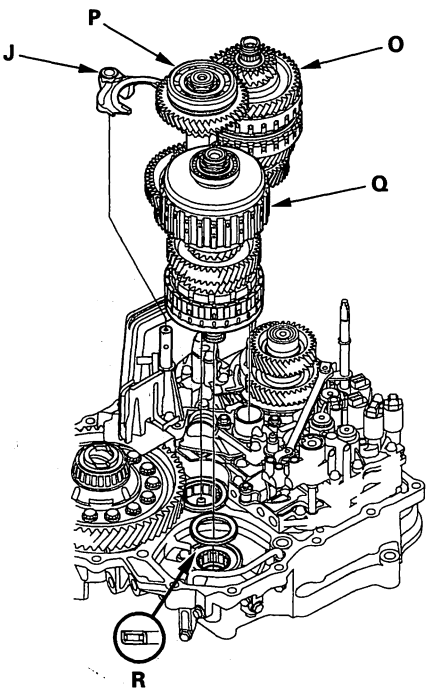


30. Remove the selector control shaft and park lever link (S).

31. Remove the baffle plate (T).

32. Remove the differential assembly (U).

33. Remove the transfer output shaft (V).

34. Remove the baffle plate (W).

35. Remove the intermediary shaft (X).

(cont'd)

Protected by AR



## Transmission Disassembly (cont'd)

36. Remove the ATF strainer (A) (one bolt).

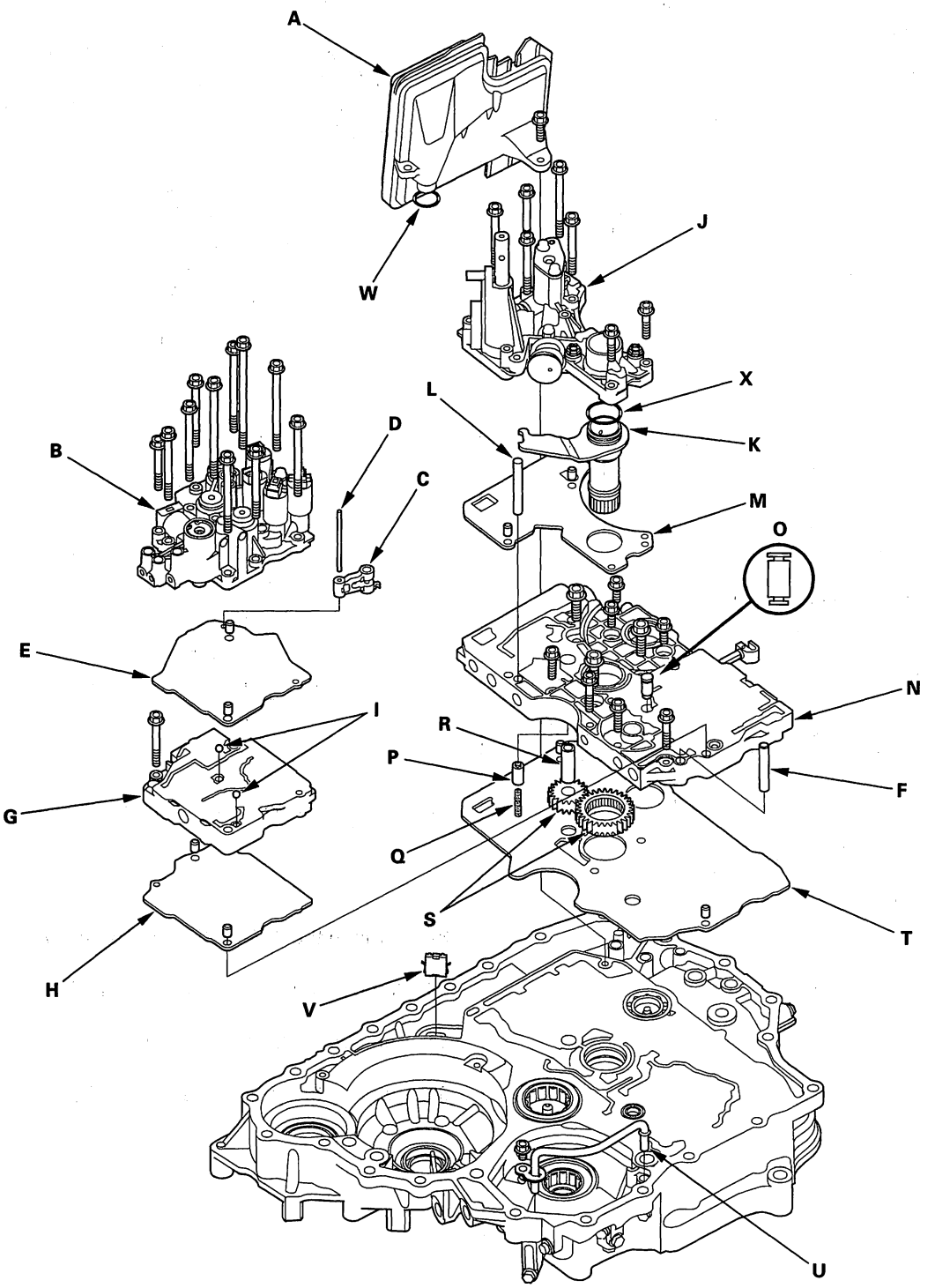




BACK

Protected by AR

37. Remove the accumulator body (B) (11 bolts), dowel pins (two), detent arm (C), arm shaft (D), and separator plate (E).

38. Remove the ATF feed pipe (F) from the main valve body.

39. Remove the secondary valve body (G) (one bolt), dowel pins (two), and separator plate (H). Do not let the check balls (I) (two) fall out.

40. Remove the regulator valve body (J) (seven bolts), stator shaft (K), stator shaft stop (L), dowel pins (two), and separator plate (M).

41. Remove the main valve body (N) (8 mm: three bolts, 6 mm: seven bolts). Do not let the lubrication check valve (O) fall out.

42. Remove the torque converter check valve (P) and valve spring (Q).

43. Remove the ATF pump driven gear shaft (R), then remove the ATF pump gears (S).

44. Remove the dowel pins (two) and main separator plate (T).

45. Remove the ATF passage pipe (U).

46. Remove the ATF magnet (V), clean it, then reinstall.

47. Remove the O-ring (W) from the ATF strainer, and replace the new O-ring when reassembling the transmission.

48. Remove the O-ring (X) from the stator shaft, and replace the new O-ring when reassembling the transmission.

49. Clean the inlet opening (A) of the ATF strainer (B) thoroughly with compressed air, then check that it is good condition and that inlet opening is not clogged.

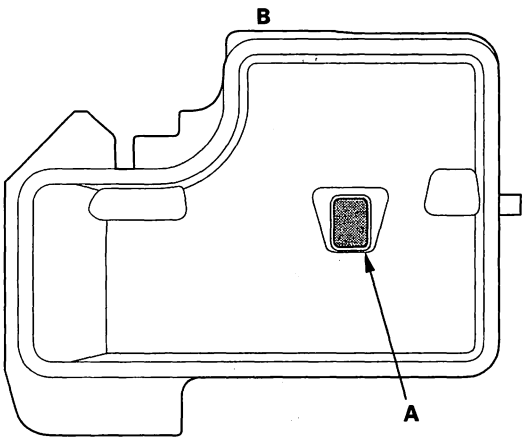


50. Test the ATF strainer by pouring clean ATF through the inlet opening, and replace if it is clogged or damaged.

Protected by AR



## Reverse Idler Gear Removal/ Installation

1. Remove the reverse idler gear assembly (A) from the transmission housing.

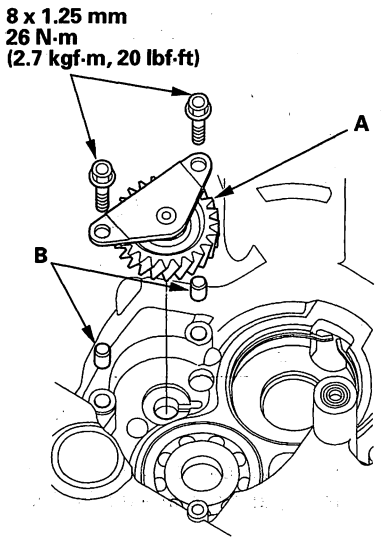


2. Install the reverse idler gear assembly with the two dowel pins (B) in the transmission housing.

## Reverse Idler Gear Disassembly/ Inspection/Reassembly

1. Remove the snap ring (A), then remove the thrust washer (B), reverse idler gear (C), needle bearings (D), and thrust washer (E) from the reverse idler gear shaft/holder (F).

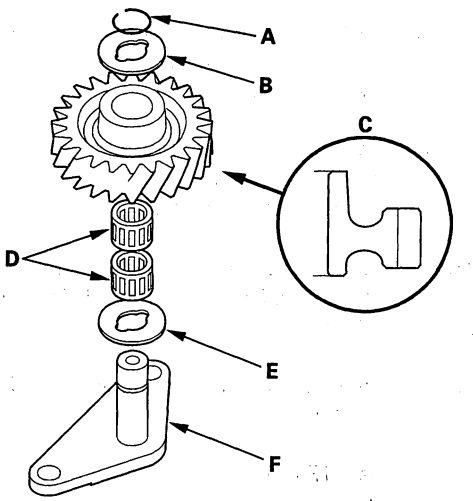


2. Inspect the reverse idler gear and gear shaft for excessive wear and damage.
3. Inspect the needle bearings for galling and rough movement.
4. Install the thrust washer and needle bearings over the gear shaft.
5. Install the reverse idler gear in the direction shown.
6. Install the thrust washer, then install the snap ring to secure the idler gear.



BACK

Protected by AR

## Secondary Shaft ATF Feed Pipe Cap Removal

1. Cover the tip of the 1st-hold clutch ATF feed pipe with a shop rag.
2. Apply air pressure to the ATF feed pipe hole of the 1st-hold clutch pressure circuit, and remove the ATF feed pipe cap from the transmission housing.

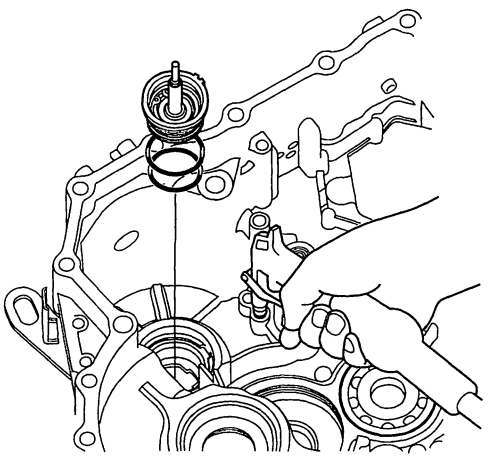

## Secondary Shaft ATF Feed Pipe Cap Installation

1. Install the new O-rings (A) on the ATF feed pipe cap (B).

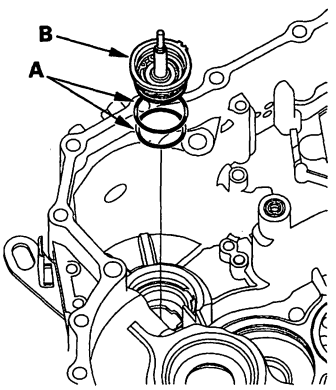


2. Install the ATF feed pipe cap in the transmission housing. Do not pinch the O-rings.

Protected by AR



## Secondary Shaft ATF Feed Pipe Cap, Feed Pipe Replacement

1. Remove the ATF feed pipe cap from the transmission housing (see page 14-323).

2. Remove the snap ring (A) from the feed pipe cap (B), then remove the feed pipe guide (C), O-rings (D) (E), and 1st clutch ATF feed pipe (F).

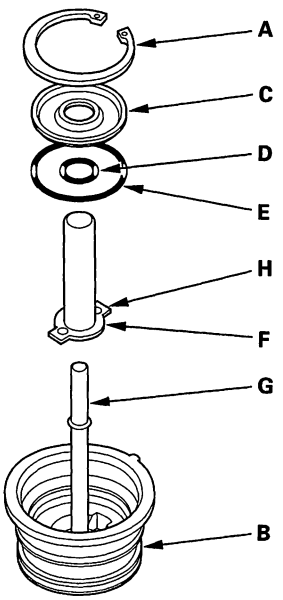


3. Replace the 1st clutch ATF feed pipe or 1st-hold clutch ATF feed pipe/ATF feed pipe cap assembly. The 1st-hold clutch ATF feed pipe/ATF feed pipe cap is not available separately.

4. Install the new O-ring (D) over the 1st clutch ATF feed pipe, then install the feed pipe over the 1st-hold clutch ATF feed pipe (G) while aligning the feed pipe tabs (H) with the guide in the cap.

5. Install the new O-ring (E) in the cap and feed pipe guide, then secure the guide with the snap ring.

## ATF Filter Removal/Inspection/ Installation

1. Remove the three 6.0 mm bolts securing the ATF filter cover (A) and ATF pipe (B).

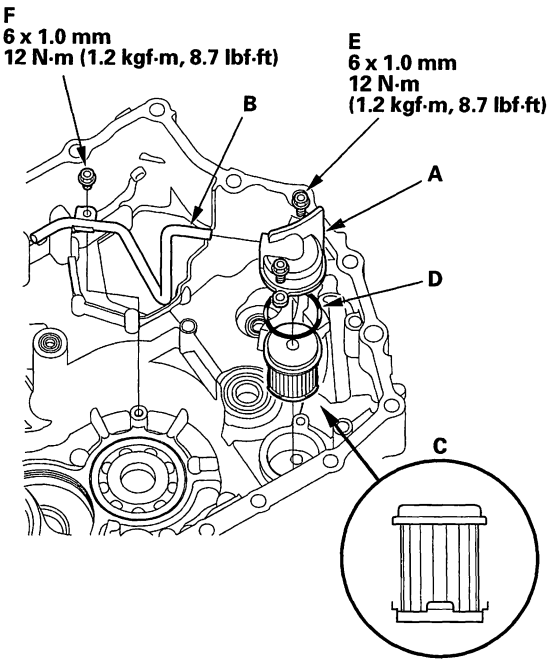


2. Remove the ATF pipe from the ATF filter cover, and remove the ATF filter (C) from the cover.

3. Clean the ATF filter, then check that it is in good condition, and is not clogged. Replace the ATF filter if it is clogged or damaged.

4. Install the ATF filter with the new O-ring (D) in the filter cover, and install the ATF pipe in the cover, then install them in the transmission housing.

5. Secure the ATF filter cover with the two bolts (E), then secure the ATF pipe with the bolt (F).



BACK

Protected by AR

## Mainshaft Bearing Removal

**Special Tools Required**
- Driver 07749-0010000
- Attachment, 78 x 80 mm 07NAD-PX40100

1. To remove the mainshaft bearing, expand the snap ring with the snap ring pliers, then push the bearing out. Do not remove the snap ring unless it's necessary to clean the groove in the housing.

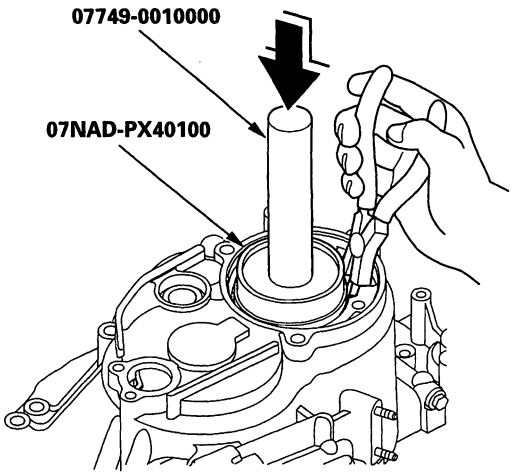


## Mainshaft Bearing Installation

**Special Tools Required**
- Driver 07749-0010000
- Attachment, 78 x 80 mm 07NAD-PX40100

1. Install the bearing in the direction shown.

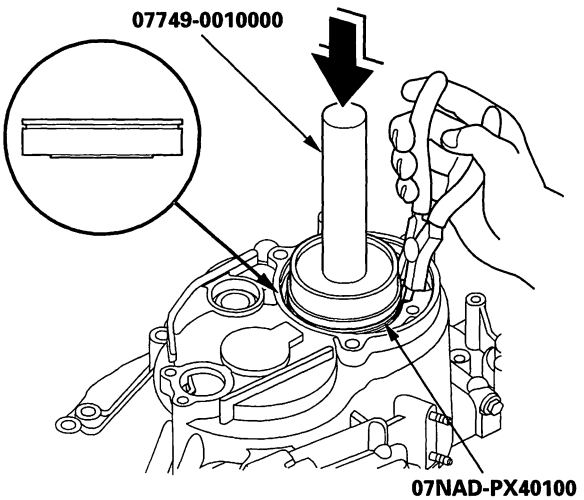


2. Expand the snap ring with the snap ring pliers, and insert the bearing part-way into the housing.

3. Release the pliers, then push the bearing down into housing until the snap ring snaps in place around it.

4. After installing the bearing, verify that the snap ring (A) is seated in the bearing and housing groove, and that the ring end gap (B) is 0—7 mm (0—0.28 in.).

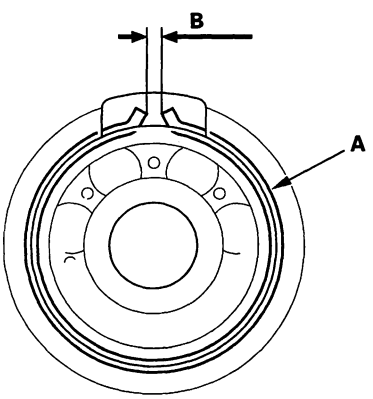

Protected by AR



## Intermediary Shaft Bearing Replacement

**Special Tools Required**
- Bearing remover shaft set, 20 mm 07936-3710600
- Bearing remover shaft handle 07936-3710100
- Sliding hammer weight 07741-0010201
- Driver 07749-0010000
- Attachment, 37 x 40 mm 07746-0010200

1. Remove the intermediary shaft bearing from the transmission housing using the bearing remover shaft set (20 mm), the bearing shaft handle, and the sliding hammer weight.

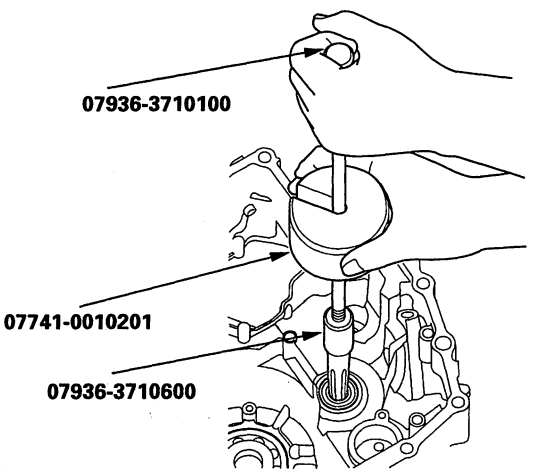


2. Install the new bearing until it bottoms in the transmission housing using the driver and the attachment (37 x 40 mm).

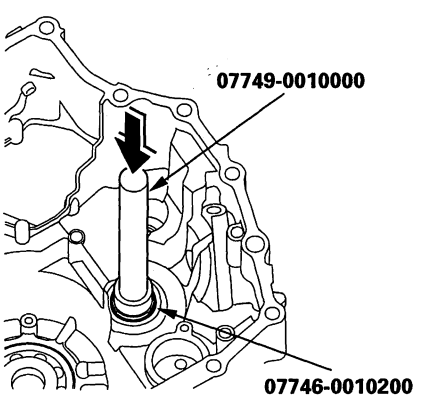


## Park Lever Shaft Bearing Replacement

**Special Tools Required**
- Bearing remover shaft, 10 mm 07936-GE00100
- Bearing remover head, 10 mm 07936-GE00200
- Sliding hammer weight 07741-0010201
- Driver 07749-0010000
- Attachment, 22 x 24 mm 07746-0010800

1. Remove the park lever shaft bearing from the transmission housing using the bearing remover head (10 mm), the bearing remover shaft (10 mm), and the sliding hammer weight.

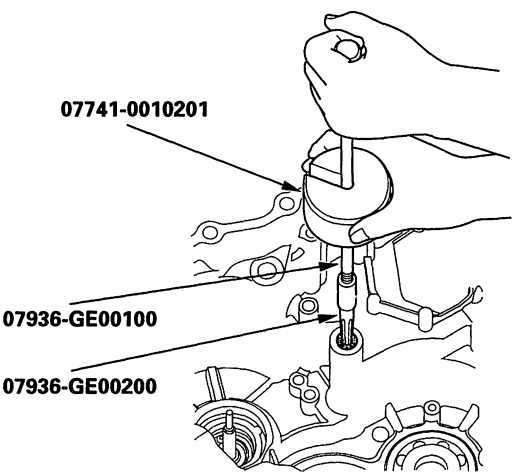


2. Install the new bearing until it bottoms in the transmission housing using the driver and the attachment (22 x 24 mm).

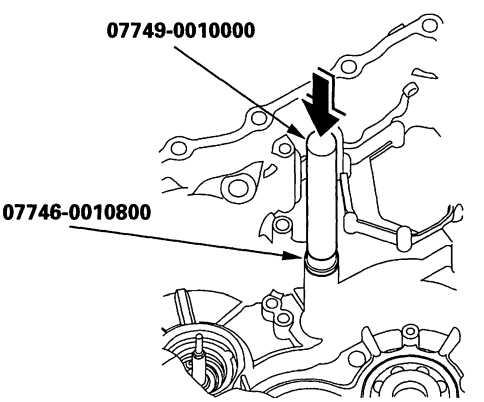




BACK

Protected by AR

## Selector Control Shaft Bearing Replacement

**Special Tools Required**
- Bearing remover shaft, 10 mm 07936-GE00100
- Bearing remover head, 10 mm 07936-GE00200
- Sliding hammer weight 07741-0010201
- Driver 07749-0010000
- Attachment, 22 x 24 mm 07746-0010800

1. Remove the control shaft bearing from the transmission housing using the bearing remover head (10 mm), the bearing remover shaft (10 mm), and the sliding hammer weight.

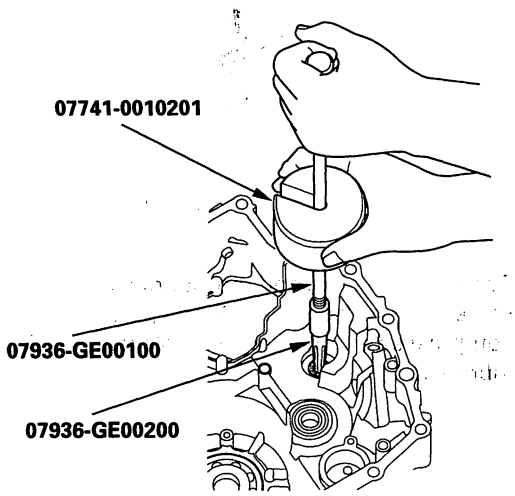


2. Install the new bearing in the transmission housing using the driver and the attachment (22 x 24 mm).

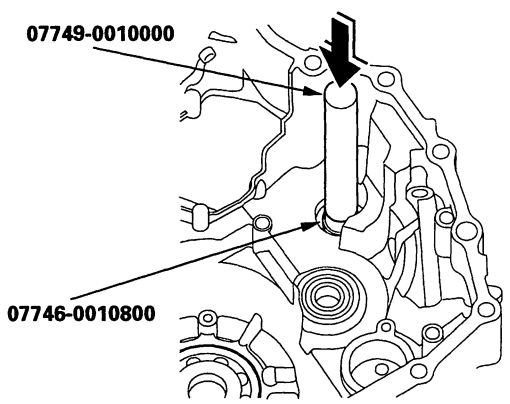


## Selector Control Shaft Oil Seal Replacement

**Special Tools Required**
- Driver 07749-0010000
- Attachment, 22 x 24 mm 07746-0010800

1. Remove the oil seal from the transmission housing.

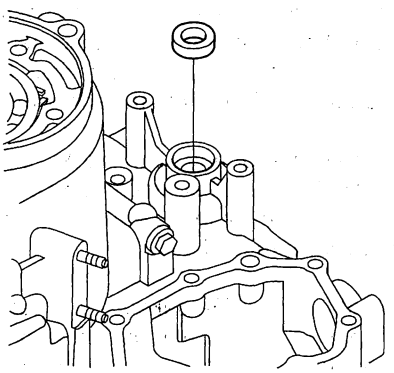

2. Install the new oil seal in the transmission housing using the driver and the attachment (22 x 24 mm).

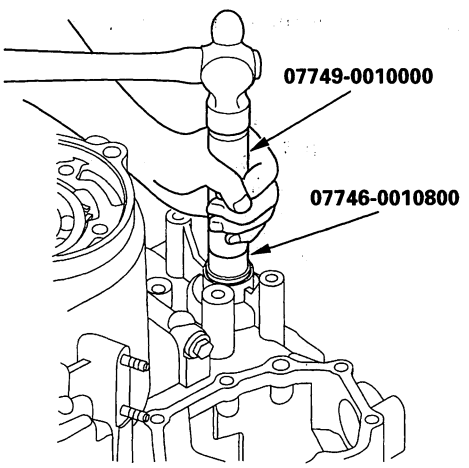

Protected by AR



## Valve Body Repair

NOTE: Valve body repair is only necessary if one or more of the valves in a valve body do not slide smoothly in their bores. Use this procedure to free the valves.

1. Soak a sheet of #600 abrasive paper in ATF for about 30 minutes.

2. Carefully tap the valve body so the sticking valve drops out of its bore. It may be necessary to use a small screwdriver to pry the valve free. Be careful not to scratch the bore with the screwdriver.

3. Inspect the valve for any scuff marks. Use the ATF-soaked #600 paper to polish off any burrs that are on the valve, then wash the valve in solvent and dry it with compressed air.

4. Roll up half of the ATF-soaked #600 paper and insert it in the valve bore of the sticking valve. Twist the paper slightly, so that it unrolls and fits the bore tightly, then polish the bore by twisting the paper as you push it in and out.

   NOTE: The valve body is aluminum and doesn't require much polishing to remove any burrs.

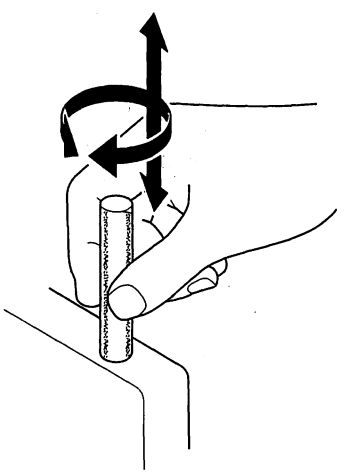

5. Remove the #600 paper. Thoroughly wash the entire valve body in solvent, then dry it with compressed air.

6. Coat the valve with ATF, then drop it into its bore. It should drop to the bottom of the bore under its own weight. If not, repeat steps 4 and 5, then retest. If the valve still sticks, replace the valve body.

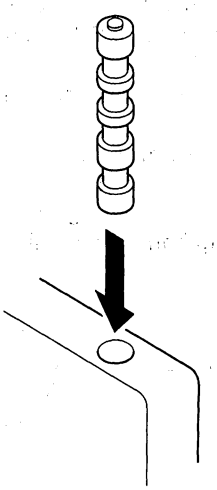

7. Remove the valve, and thoroughly clean it and the valve body with solvent. Dry all parts with compressed air, then reassemble using ATF as a lubricant.



BACK

Protected by AR

## Valve Body Valve Installation

1. Coat all parts with ATF before assembly.

2. Install the valves and springs in the sequence shown for the main valve body (see page 14-330), secondary valve body (see page 14-332), regulator valve body (see page 14-333), and accumulator body (see page 14-334). Refer to the following valve cap illustrations, and install each valve cap so the end shown facing up will be facing the outside of the valve body, then secure the valve cap with the valve cap clip.

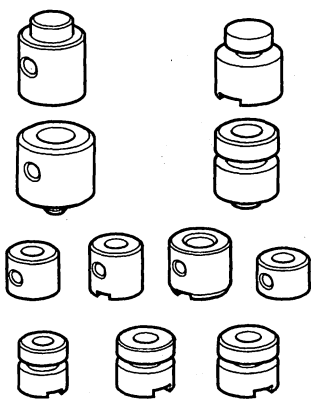

3. Install the valve (A) and valve spring (B) in the valve body. Push the valve spring in with a screwdriver, then install the spring seat (C).

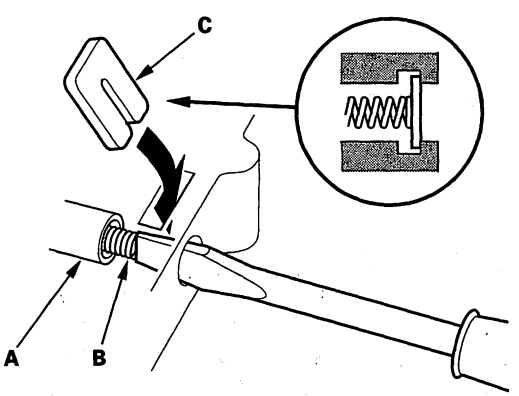

Protected by AR



## Main Valve Body Disassembly, Inspection, and Reassembly

1. Clean all parts thoroughly in solvent or carburetor cleaner, and dry them with compressed air. Blow out all passages.
2. Inspect the main valve body for scoring and damage.
3. Check all valves for free movement. If any fail to slide freely, refer to valve body repair (see page 14-328).
4. Coat all parts with ATF during assembly.
5. Replace the filter with new one, and install it and the lubrication check valve in the direction shown.

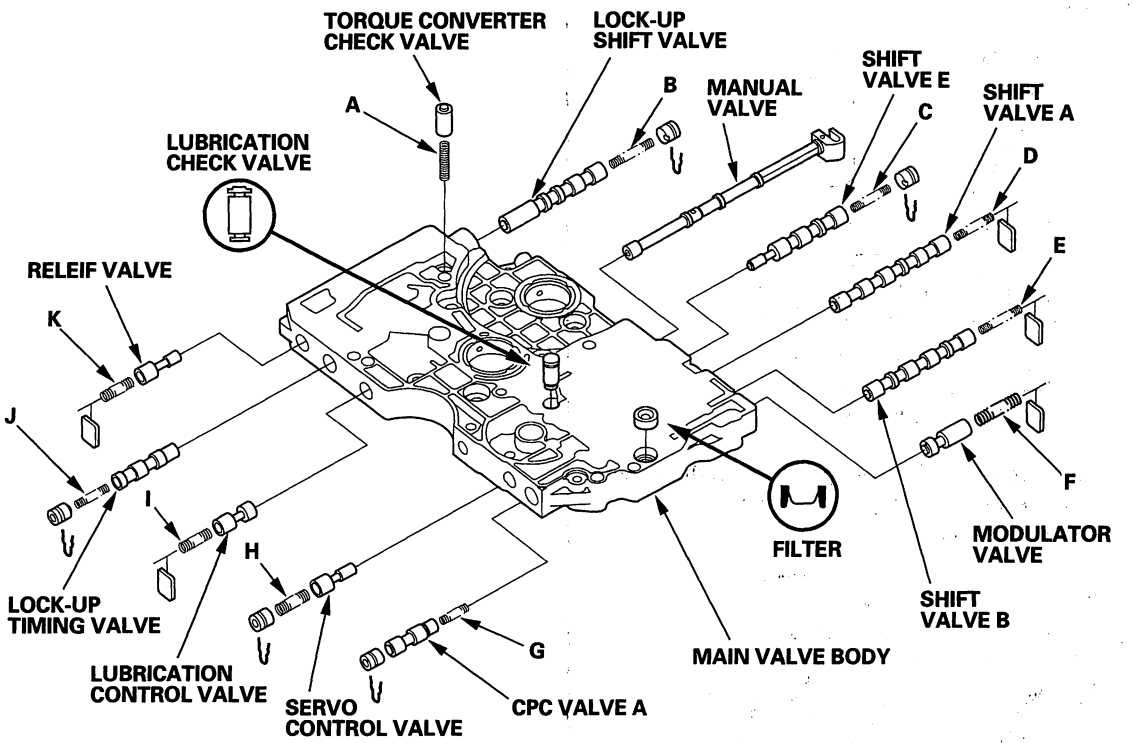


**VALVE SPRINGS SPECIFICATIONS**

| Valve Springs | | Standard (New)-Unit: mm (in.) | | | |
|---|---|---|---|---|---|
| | | Wire Diameter | O.D. | Free Length | No. of Coil |
| A | Torque converter check valve spring | 1.1 (0.043) | 8.6 (0.339) | 35.0 (1.378) | 12.6 |
| B | Lock-up shift valve spring | 1.0 (0.039) | 6.6 (0.260) | 35.5 (1.398) | 18.2 |
| C | Shift valve E spring | 0.7 (0.028) | 6.6 (0.260) | 42.4 (1.669) | 17.6 |
| D | Shift valve A spring | 0.9 (0.035) | 6.6 (0.260) | 50.5 (1.988) | 23.3 |
| E | Shift valve B spring | 0.8 (0.031) | 6.6 (0.260) | 49.1 (1.933) | 21.7 |
| F | Modulator valve spring | 1.6 (0.063) | 10.4 (0.409) | 33.5 (1.319) | 9.8 |
| G | CPC valve A spring | 0.7 (0.028) | 6.1 (0.240) | 17.8 (0.701) | 7.9 |
| H | Servo control valve spring | 0.9 (0.035) | 9.6 (0.378) | 30.2 (1.189) | 8.4 |
| I | Lubrication control valve spring | 0.9 (0.035) | 8.7 (0.343) | 25.0 (0.984) | 7.2 |
| J | Lock-up timing valve spring | 0.6 (0.024) | 6.6 (0.260) | 30.8 (1.213) | 11.1 |
| K | Relief valve spring | 1.0 (0.039) | 9.6 (0.378) | 28.1 (1.106) | 7.7 |



BACK

Protected by AR

## ATF Pump Inspection

1. Install the ATF pump drive gear (A), driven gear (B), and ATF pump driven gear shaft (C) in the main valve body (D). Lubricate all parts with ATF, and install the ATF pump driven gear with its grooved and chamfered side facing up.

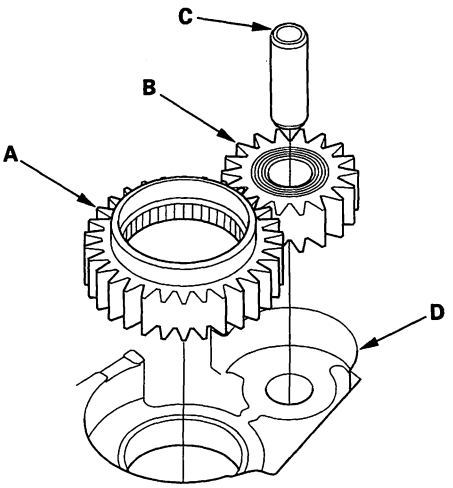


2. Measure the side clearance of the ATF pump drive gear (A) and driven gear (B).

   **ATF Pump Gears Side (Radial) Clearance**
   **Standard (New):**
   **ATF Pump Drive Gear**
   **0.210—0.265 mm (0.0083—0.00104 in.)**
   **ATF Pump Driven Gear**
   **0.070—0.125 mm (0.0028—0.0050 in.)**

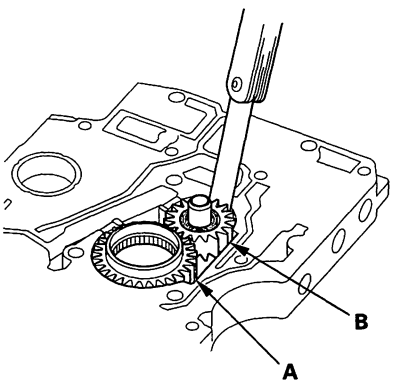


3. Remove the ATF pump driven gear shaft. Measure the thrust clearance between the ATF pump driven gear (A) and the valve body (B) with a straight edge (C) and a feeler gauge (D).

   **ATF Pump Drive/Driven Gear Thrust (Axial) Clearance**
   **Standard (New): 0.03—0.06 mm (0.001—0.002 in.)**
   **Service Limit: 0.07 mm (0.003 in.)**

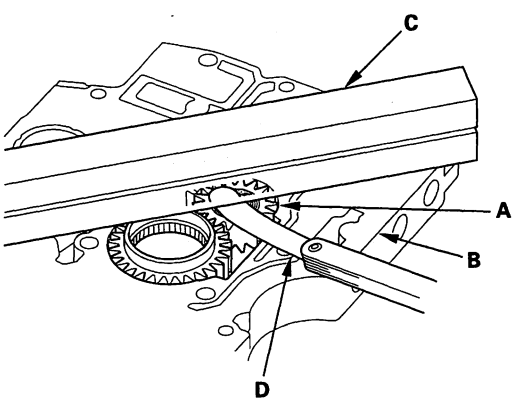

Protected by AR



## Secondary Valve Body Disassembly, Inspection, and Reassembly

1. Clean all parts thoroughly in solvent or carburetor cleaner, and dry them with compressed air. Blow out all passages.
2. Do not use a magnet to remove the check balls, it may magnetize the check balls.
3. Inspect the secondary valve body for scoring and damage.
4. Check all valves for free movement. If any fail to slide freely, refer to valve body repair (see page 14-328).
5. Coat all parts with ATF during assembly.

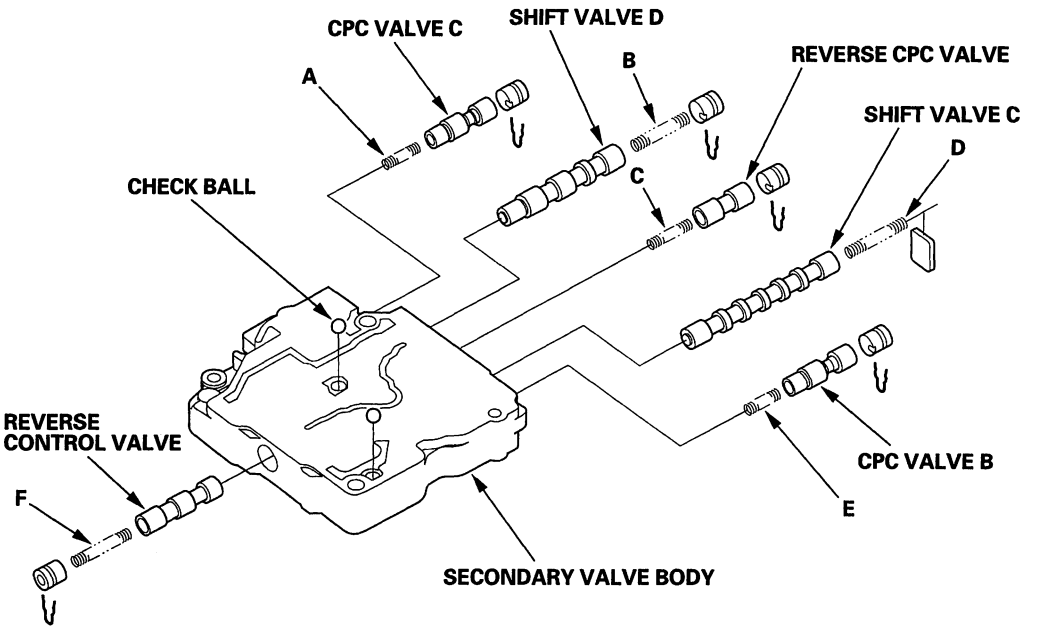


**VALVE SPRINGS SPECIFICATIONS**

| Valve Springs | | Standard (New)-Unit: mm (in.) | | | |
|---|---|---|---|---|---|
| | | Wire Diameter | O.D. | Free Length | No. of Coil |
| A | CPC valve C spring | 0.7 (0.028) | 6.1 (0.240) | 17.8 (0.701) | 7.9 |
| B | Shift valve D spring | 0.7 (0.028) | 6.6 (0.260) | 42.4 (1.669) | 17.6 |
| C | Reverse CPC valve spring | 0.8 (0.031) | 6.1 (0.240) | 24.4 (0.961) | 14.6 |
| D | Shift valve C spring | 0.8 (0.031) | 6.6 (0.260) | 49.1 (1.933) | 21.7 |
| E | CPC valve B spring | 0.7 (0.028) | 6.1 (0.240) | 17.8 (0.701) | 7.9 |
| F | Reverse control valve spring | 0.8 (0.031) | 6.6 (0.260) | 49.1 (1.933) | 21.7 |



BACK

Protected by AR

## Regulator Valve Body Disassembly, Inspection, and Reassembly

1. Clean all parts thoroughly in solvent or carburetor cleaner, and dry them with compressed air. Blow out all passages.
2. Inspect the regulator valve body for scoring and damage.
3. Hold the regulator spring cap in place while removing the stop bolt. The regulator spring cap is spring loaded. Once the stop bolt is removed, release the spring cap slowly so it does not pop out.
4. Check all valves for free movement. If any fail to slide freely, refer to valve body repair (see page 14-328).
5. Coat all parts with ATF during assembly.
6. Align the hole in the regulator spring cap with the stop bolt hole, then press the spring cap into the valve body, and tighten the stop bolt.
7. Install the servo valve with the new O-ring, and 3rd accumulator piston with the new O-ring.

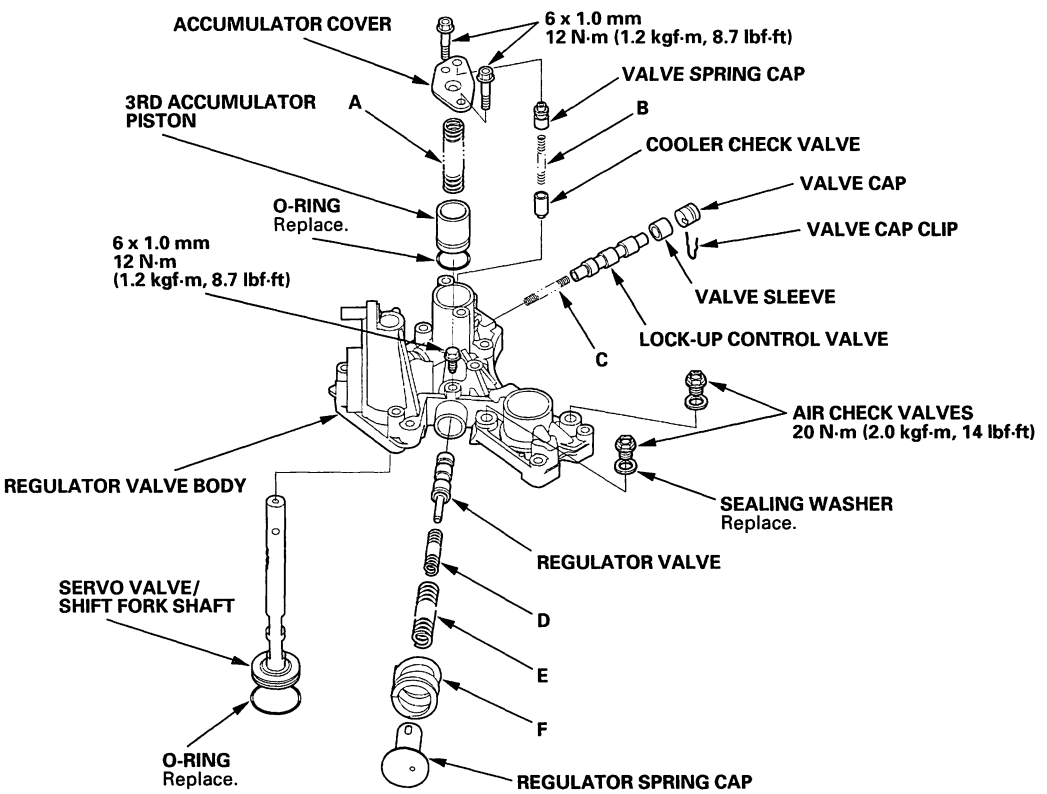


**VALVE SPRINGS SPECIFICATIONS**

| Valve Springs | | Standard (New)-Unit: mm (in.) | | | |
|---|---|---|---|---|---|
| | | Wire Diameter | O.D. | Free Length | No. of Coil |
| A | 3rd accumulator spring | 3.1 (0.122) | 19.6 (0.772) | 41.4 (1.630) | 5.5 |
| B | Cooler check valve spring | 0.9 (0.035) | 6.7 (0.264) | 31.5 (1.240) | 14.2 |
| C | Lock-up control valve spring | 0.7 (0.028) | 6.6 (0.260) | 42.9 (1.689) | 14.2 |
| | | 0.8 (0.031) | 6.6 (0.260) | 44.3 (1.744) | 25.5 |
| D | Regulator valve spring B | 1.4 (0.055) | 8.8 (0.346) | 44.0 (1.732) | 12.0 |
| E | Regulator valve spring A | 1.85 (0.073) | 14.7 (0.579) | 86.9 (3.421) | 16.2 |
| F | Stator reaction spring | 5.5 (0.217) | 37.4 (1.472) | 30.3 (1.193) | 2.1 |

BACK

Protected by AR



## Accumulator Body Disassembly, Inspection, and Reassembly

1. Clean all parts thoroughly in solvent or carburetor cleaner, and dry them with compressed air. Blow out all passages.
2. Inspect the accumulator body for scoring and damage.
3. Coat all parts with ATF during assembly.
4. Replace the O-rings with new ones.

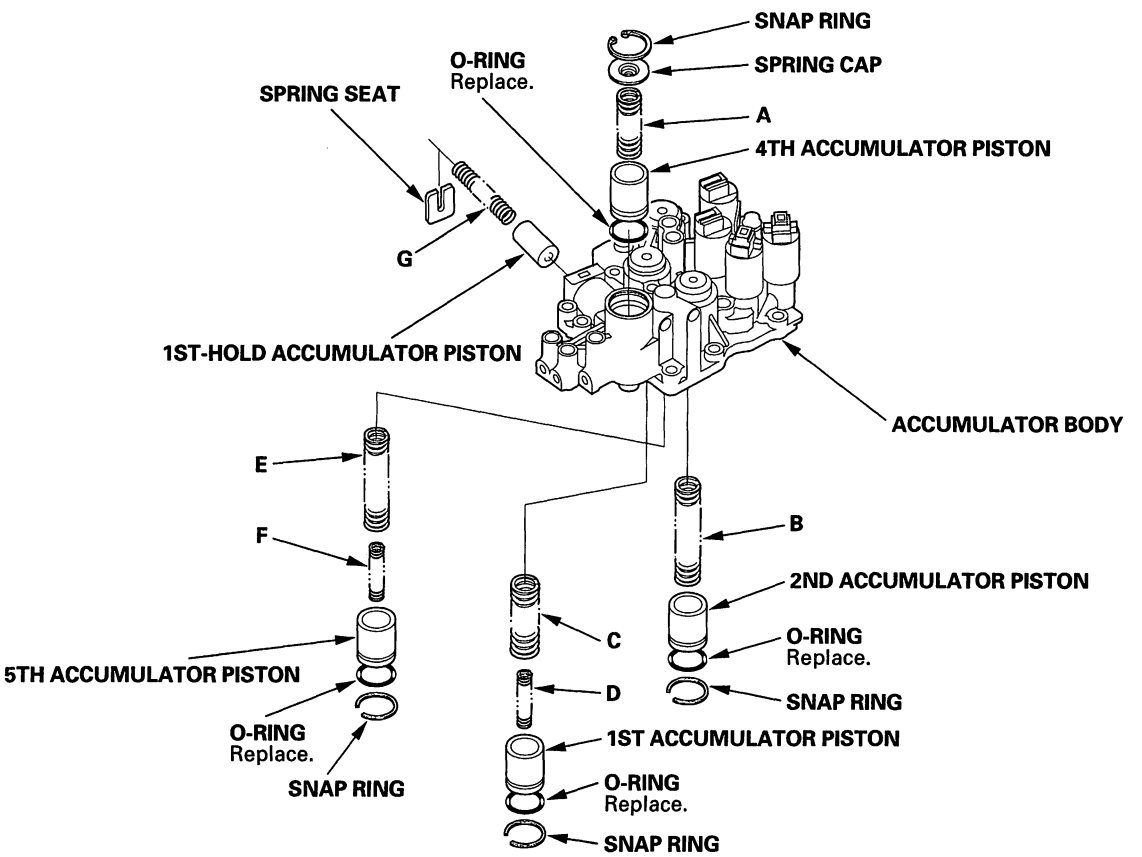


**VALVE SPRINGS SPECIFICATIONS**

| Valve Springs | | Standard: (New)-Unit mm (in.) | | | |
|---|---|---|---|---|---|
| | | Wire Diameter | O.D. | Free Length | No. of Coil |
| A | 4th accumulator spring | 3.3 (0.130) | 19.6 (0.772) | 39.1 (1.539) | 5.8 |
| B | 2nd accumulator spring | 3.1 (0.122) | 19.6 (0.772) | 53.4 (2.102) | 7.5 |
| C | 1st accumulator spring A | 2.3 (0.091) | 19.6 (0.772) | 60.8 (2.394) | 9.5 |
| D | 1st accumulator spring B | 2.5 (0.098) | 12.8 (0.504) | 46.0 (1.811) | 9.5 |
| E | 5th accumulator spring A | 2.4 (0.094) | 19.6 (0.772) | 65.5 (2.579) | 12.0 |
| F | 5th accumulator spring B | 2.4 (0.094) | 13.2 (0.520) | 50.5 (1.988) | 10.1 |
| G | 1st-hold accumulator spring | 2.0 (0.079) | 13.1 (0.516) | 42.9 (1.689) | 9.8 |



BACK

Protected by AR

## Shift Solenoid Valve Removal and Installation

NOTE: Do not hold the solenoid valve connector to remove and install the solenoid valve. Be sure to hold the solenoid valve body.

1. Remove the mounting bolts, then remove the solenoid valves by holding the solenoid valve body.

2. Install the new O-rings (E) on each solenoid valves.

   NOTE: If you are installing a new solenoid valve, it comes with new O-rings already installed.

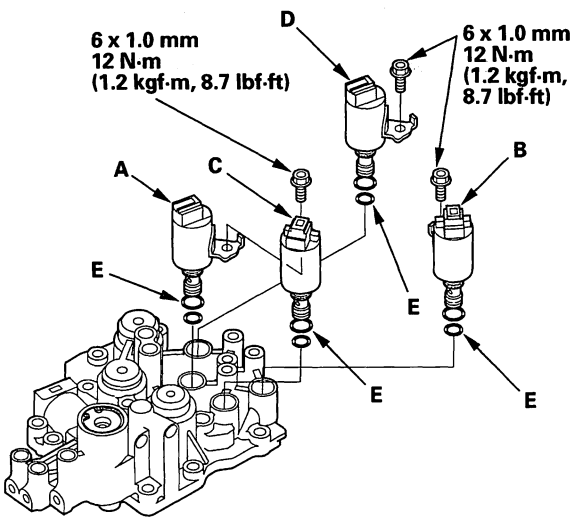


3. Install shift solenoid valve D (black connector) by holding the shift solenoid valve body; be sure to install mounting bracket contacts to the accumulator body.

4. Install shift solenoid valve A (black connector) by holding the shift solenoid valve body; be sure to install mounting bracket contacts to the accumulator body.

5. Install shift solenoid valve C (brown connector) by holding the shift solenoid valve body; be sure to position the mounting bracket on top of the bracket of shift solenoid valve A.

   NOTE: Do not install shift solenoid valve C before installing shift solenoid valve A. If shift solenoid valve C is installed before installing shift solenoid valve A, it may damage to hydraulic control system.

6. Install shift solenoid valve B (brown connector) by holding the shift solenoid valve body; be sure the mounting bracket contacts the accumulator body.

Protected by AR



## Mainshaft Bearing and Oil Seal Replacement

**Special Tools Required**
- Adjustable bearing puller, 25—40 mm 07736-A01000B or 07736-A01000A
- Driver 07749-0010000
- Attachment, 62 x 68 mm 07746-0010500
- Attachment, 72 x 75 mm 07746-0010600

1. Remove the mainshaft bearing and oil seal using the adjustable bearing puller (25—40 mm) and a commercially available 3/8 "-16 slide hammer (A).

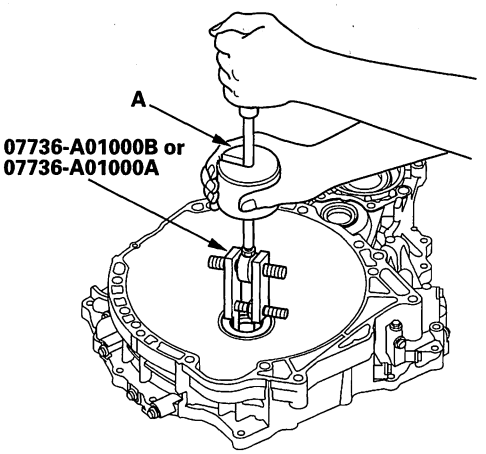


2. Install the new mainshaft bearing until it bottoms in the housing using the driver and the attachment (62 x 68 mm).

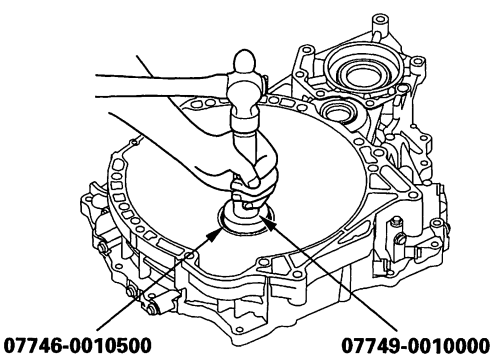


3. Install the new oil seal flush to the housing using the driver and the attachment (72 x 75 mm).

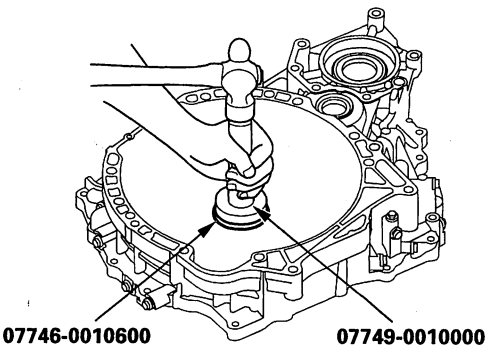




BACK

Protected by AR

## Countershaft Bearing Replacement

**Special Tools Required**
- Adjustable bearing puller, 25—40 mm 07736-A01000B or 07736-A01000A
- Driver 07749-0010000
- Attachment, 78 x 80 mm 07NAD-PX40100

1. Remove the countershaft bearing from the torque converter housing using the adjustable bearing puller (25—40 mm) and a commercially available 3/8 ″-16 slide hammer (A).

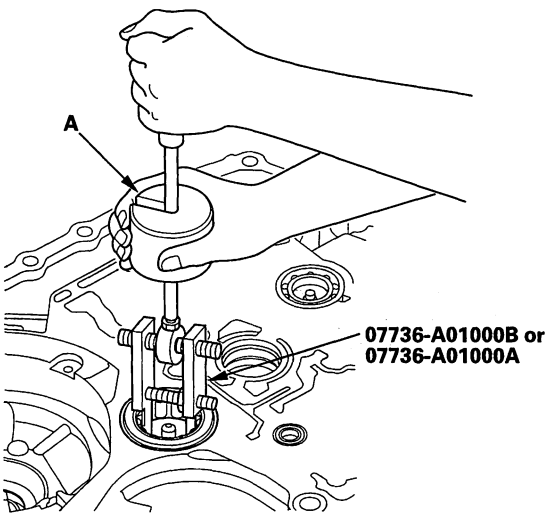


2. Install the ATF guide plate (A) into the housing, then install the new bearing (B) in the direction shown.

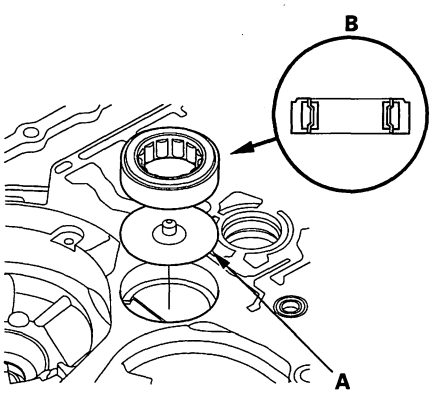


3. Install the bearing (A) in the housing using the driver and the attachment (78 x 80 mm); install bearing outer notch-cut (B) in depth (C) of 0—0.03 mm (0—0.001 in.) below the housing surface (D).

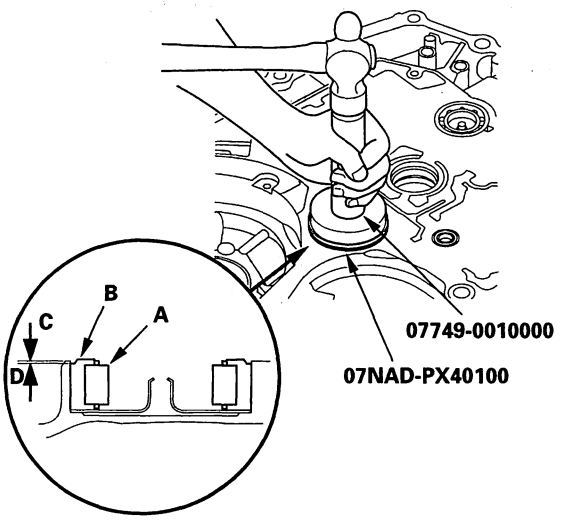

Protected by AR



## Secondary Shaft Bearing Replacement

**Special Tools Required**
- Adjustable bearing puller, 25—40 mm 07736-A01000B or 07736-A01000A
- Bearing remover shaft set, 30 mm 07936-8890300
- Bearing remover shaft handle 07936-3710100
- Sliding hammer weight 07741-0010201
- Driver 07749-0010000
- Attachment, 37 x 40 mm 07746-0010200
- Attachment, 62 x 68 mm 07746-0010500

1. Remove the bolt, then remove the lock washer (A) and bearing set plate (B).

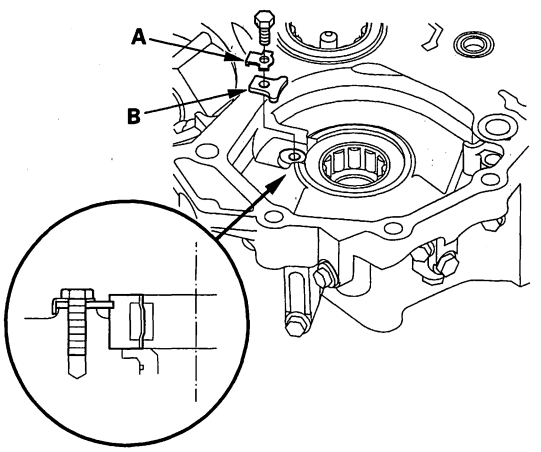


2. Remove the secondary shaft bearing from the torque converter housing using the adjustable bearing puller (25—40 mm) and a commercially available 3/8 ″-16 slide hammer (A).

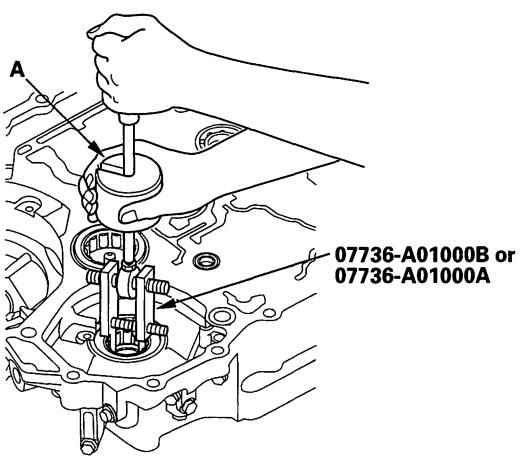


3. Remove the ATF guide collar from the torque converter housing.

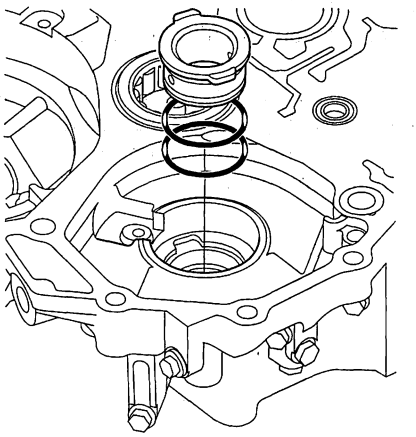

4. Remove the 29 x 39 x 9.5 mm secondary shaft bearing from the torque converter housing using the bearing remover shaft set (30 mm), the bearing remover shaft handle, and the sliding hammer weight.

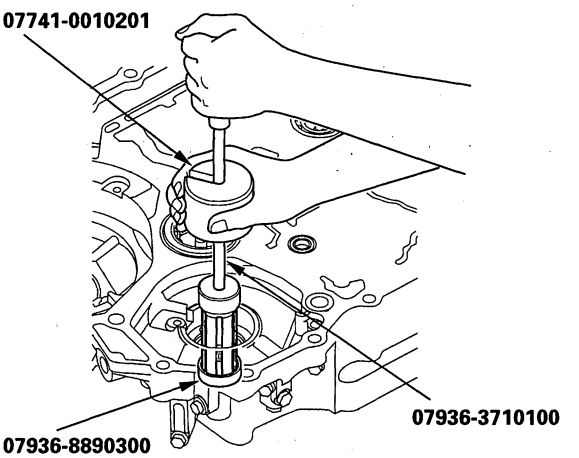




BACK

Protected by AR

5. Install the 29 x 39 x 9.5 mm bearing into the torque converter housing using the driver and the attachment (37 x 40 mm).

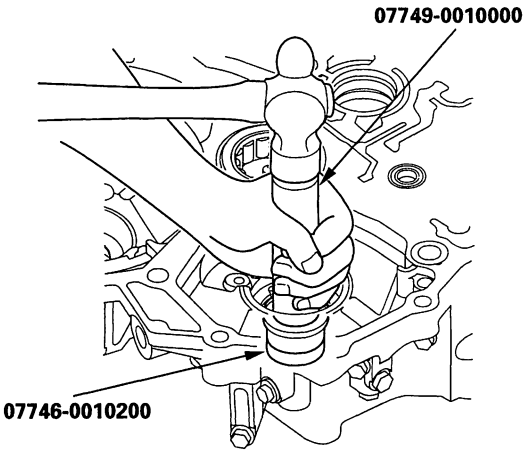


6. Install the new O-rings (A) on the ATF guide collar (B), then install the guide collar in the torque converter housing.

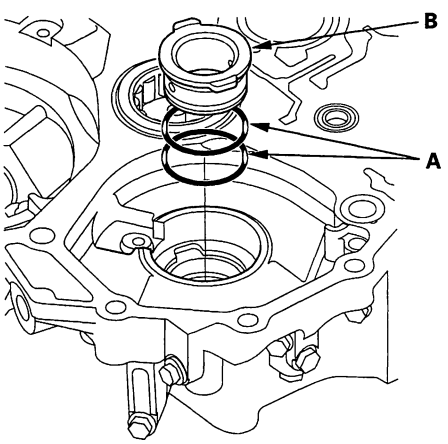


7. Install the bearing in the direction shown in the housing using the driver and the attachment (62 x 68 mm).

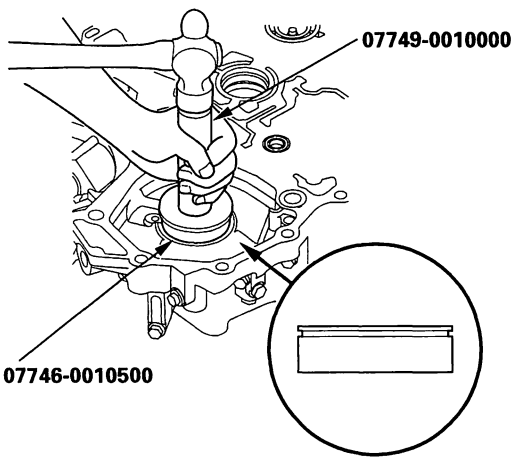


8. Check that the bearing groove aligns with the set plate mounting surface, then install the set plate (A) by aligning it with the bearing groove.

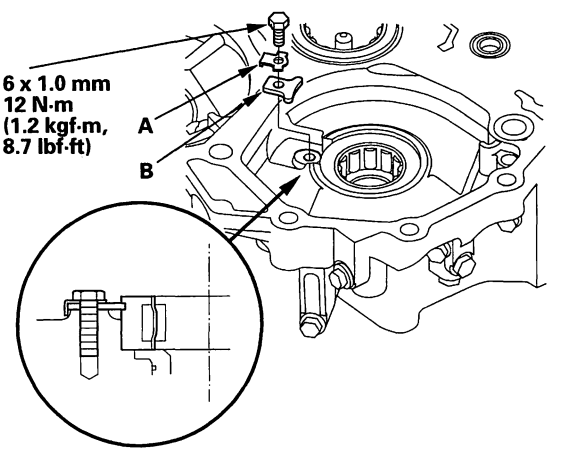


9. Install the new lock washer (B) and bolt, then bend the lock tab of the lock washer against the bolt head.

Protected by AR



## Intermediary Shaft Bearing Replacement

**Special Tools Required**
- Adjustable bearing puller, 25—40 mm 07736-A01000B or 07736-A01000A
- Driver 07749-0010000
- Attachment, 52 x 55 mm 07746-0010400

1. Remove the intermediary shaft bearing from the torque converter housing using the adjustable bearing puller (25—40 mm) and a commercially available 3/8 ″-16 slide hammer (A).

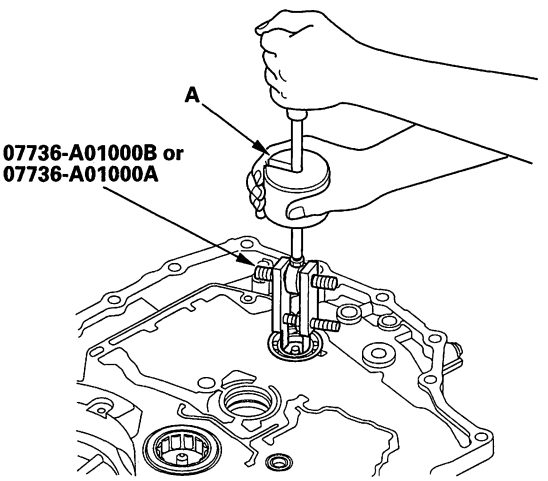


2. Install the ATF guide plate (A), then install the new bearing (B) in the housing.

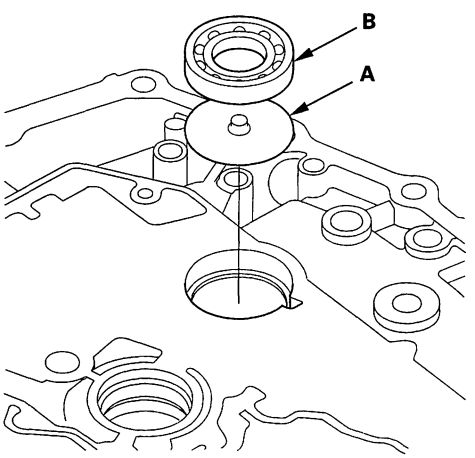


3. Drive the bearing into the housing using the driver and the attachment (52 x 55 mm).

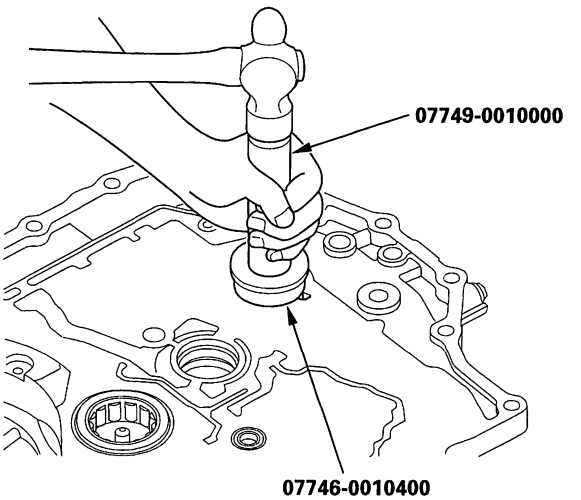




BACK

Protected by AR

## Park Lever Shaft Bearing Replacement

**Special Tools Required**
- Bearing remover shaft set, 12 mm 07936-1660101
- Sliding hammer weight 07741-0010201
- Driver 07749-0010000
- Attachment, 22 x 24 mm 07746-0010800

1. Remove the park lever shaft bearing from the torque converter housing using the bearing remover shaft set (12 mm) and the sliding hammer weight.

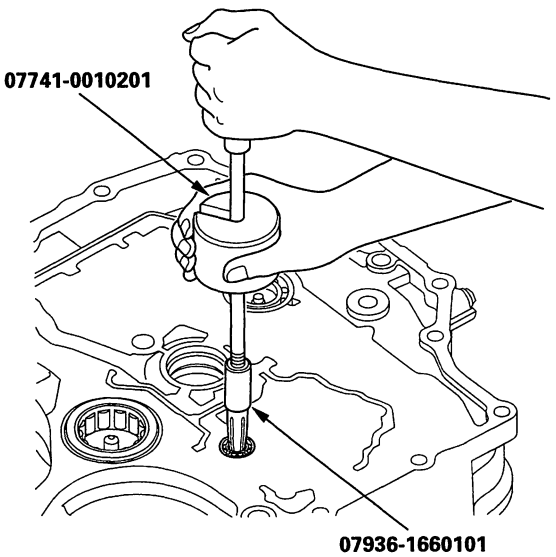


2. Install the new bearing until it bottoms in the housing using the drive and the attachment (22 x 24 mm).

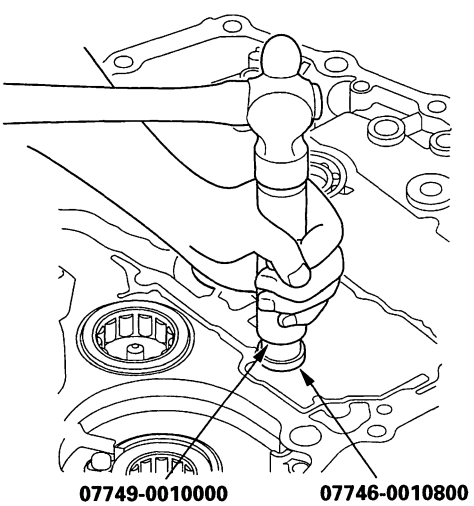


BACK

Protected by AR



## Mainshaft Disassembly, Inspection, and Reassembly

1. Remove the thrust needle bearing (A), mainshaft 5th gear (B), needle bearing (C), thrust needle bearing (D), mainshaft 5th gear collar (E), 4th/5th clutch (F), and O-rings (G) from the mainshaft (H).

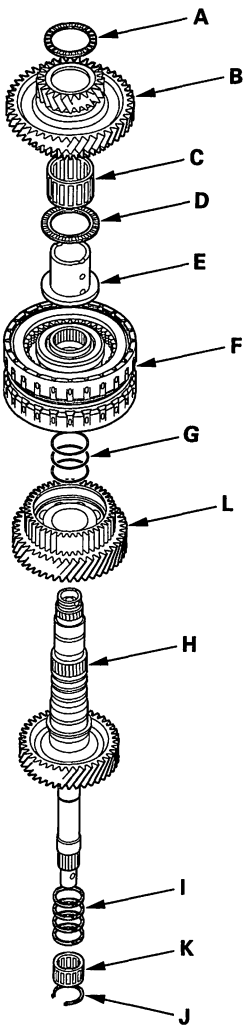


2. Inspect the condition of the sealing rings (I). If the sealing rings are worn, distorted, or damaged, remove the set ring (J) and needles bearing (K), and replace the sealing rings with new ones.
3. Inspect the thrust needle bearing and needle bearing for wear and rough movement.
4. Inspect the splines for excessive wear and damage.
5. Inspect the 4th gear for wear and damage, and inspect 4th gear bearing for wear and rough rotation.
6. Replace the mainshaft 4th gear (L) if the 4th gear is worn or damaged, or the bearing is worn or damaged.
7. Check the shaft bearing surfaces for scoring and excessive wear.
8. Lubricate all parts with ATF during reassembly.
9. Wrap the shaft splines with tape to prevent O-ring damage, install the new O-rings on the mainshaft, then remove the tape.
10. Install the 4th/5th clutch.
11. Install the mainshaft 5th gear coiler, thrust needle bearing, needle bearing, mainshaft 5th gear, and thrust needle bearing.



BACK

Protected by AR

## Mainshaft 4th Gear Replacement

**Special Tools Required**
Driver, 40 mm I.D. 07746-0030100

1. Remove the mainshaft 4th gear (A) with the press. Place a shaft protector (B) between the press and mainshaft (C) to prevent damaging the mainshaft.

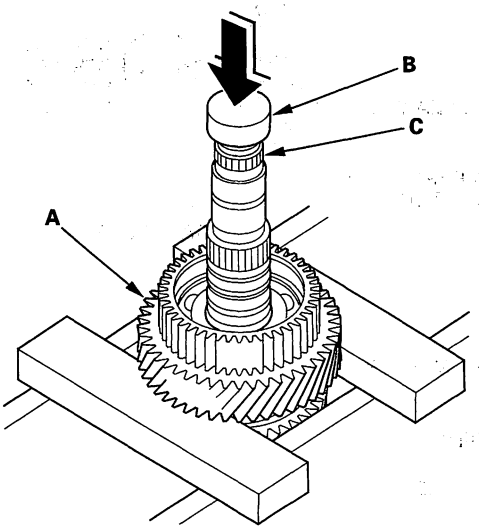


2. Slide the new mainshaft 4th gear (A) over the mainshaft (B), then press it into place using the driver (40 mm I.D.) and the press.

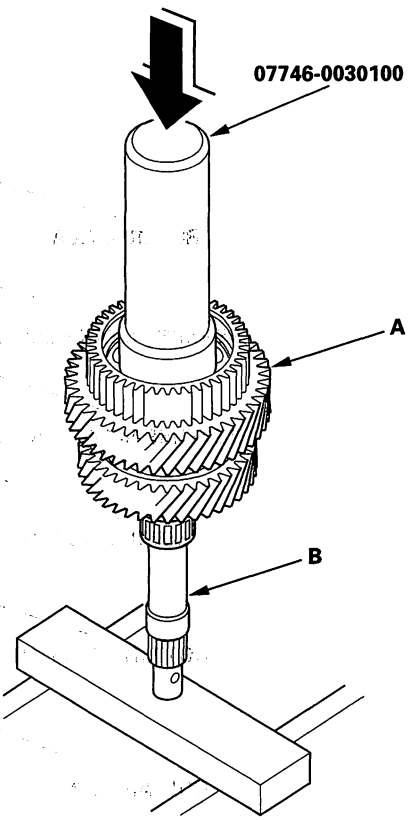

Protected by AR



## Countershaft Disassembly

### Exploded View

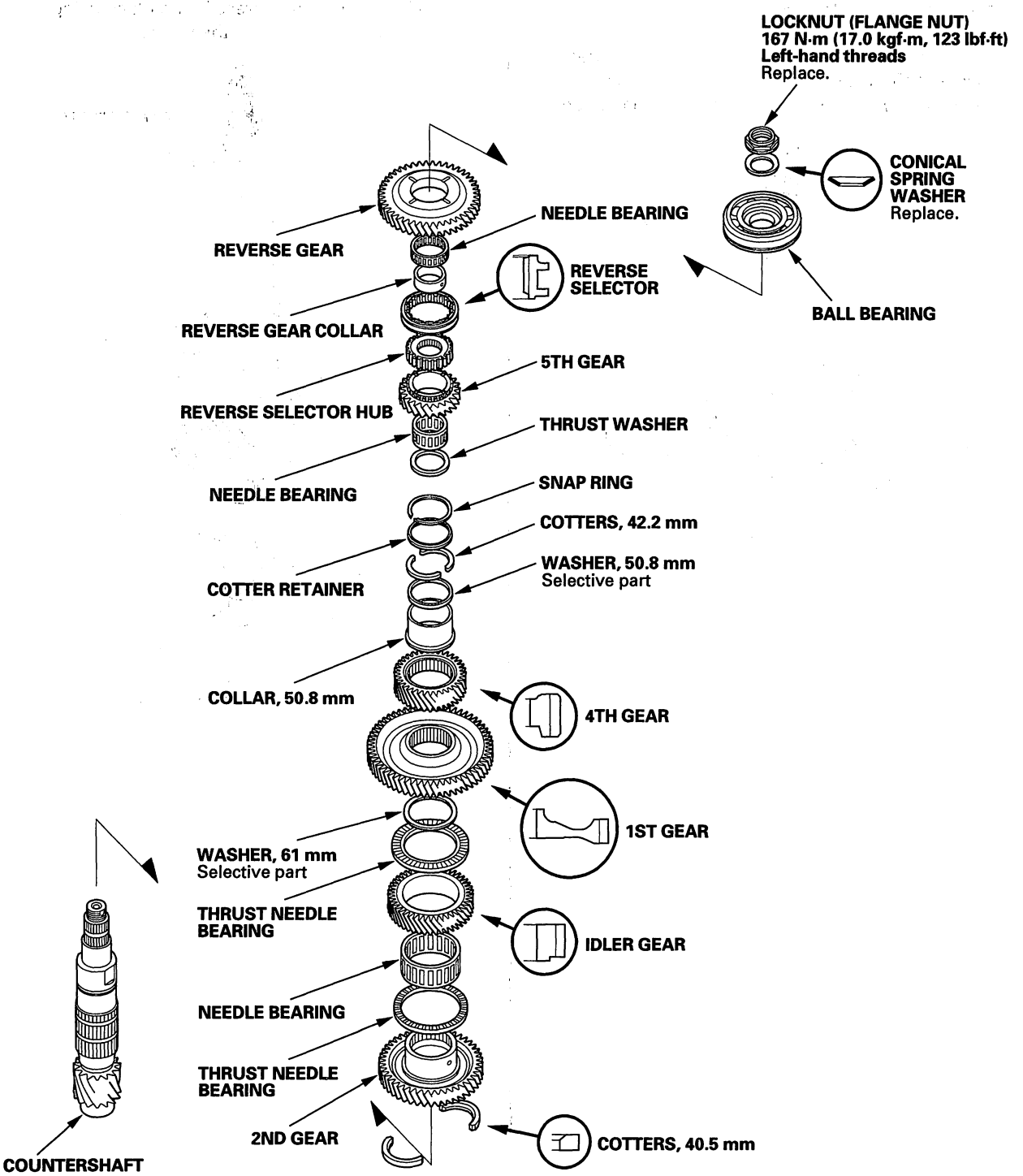




BACK

Protected by AR

NOTE: Refer to the Exploded View as needed during the following procedure.

1. Cut the lock tab (A) off the countershaft locknut (B) using a chisel (C).

   NOTE: Keep all of the chiseled particles out of the countershaft.

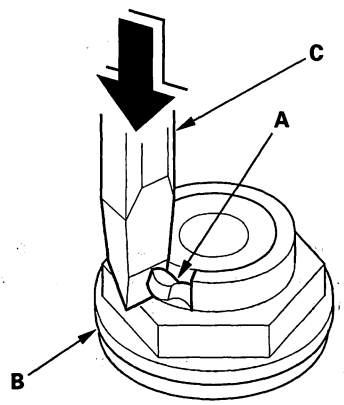


2. Hold the countershaft with a wrench and a vise securely, loosen the locknut, and remove it. The locknut has left-hand threads.

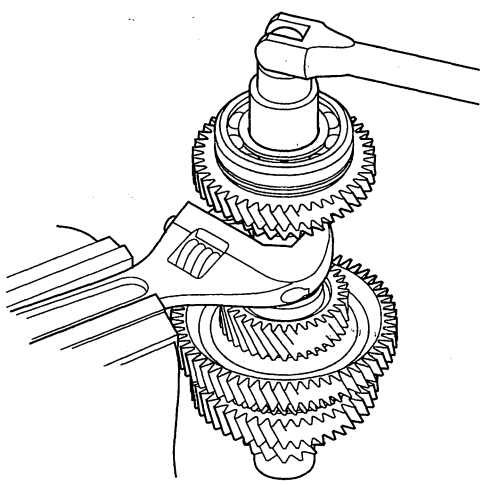

3. Place the countershaft 5th gear (A) on press bases (B), and place a shaft protector (C) between the countershaft (D) and the press to prevent damaging the countershaft.

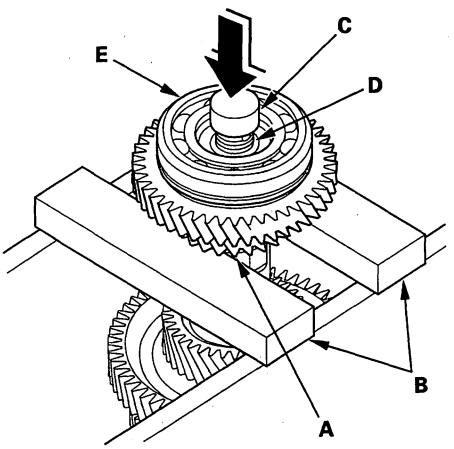


4. Press the countershaft out of the press-fitted bearing (E) and the press-fitted reverse selector hub, and remove the countershaft while holding the underside of the countershaft. The countershaft falls down when pressing the countershaft out of the press-fitted reverse selector hub. Some reverse selector hubs are not press-fitted, and the countershaft falls down when pressing the countershaft out of press-fitted bearing.

5. Remove the remaining parts from the countershaft.

6. Inspect the bearing for galling and rough movement.

7. Check the shaft bearing surfaces for scoring and excessive wear, and check the shaft splines for excessive wear and damage.

8. Check the idler gear axial clearance and 4th gear axial clearance (see page 14-346).

Protected by AR



## Countershaft Idler Gear and 4th Gear Axial Clearance Inspection

1. Install the 40.5 mm cotters (A), 2nd gear (B), thrust needle bearing (C), needle bearing (D), idler gear (E), thrust needle bearing (F), 61 mm washer (G), 1st gear (H), 4th gear (I), 50.8 mm collar (J), 50.8 mm washer (K), 42.2 mm cotters (L), cotter retainer (M), and snap ring (N) on the countershaft (O). Install the 40.5 mm cotters, idler gear, 1st gear, and 4th gear in the direction shown.

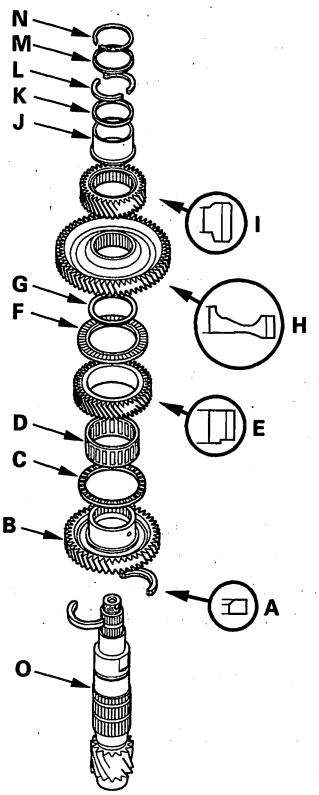


2. Insert a feeler gauge blade (A) as thick as possible between the 50.8 mm collar (B) and 50.8 mm washer (C).

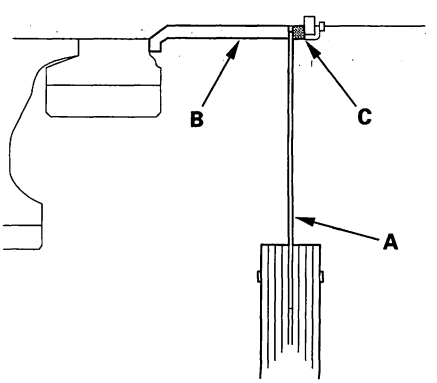


3. Set the dial indicator (A) on the idler gear (B).

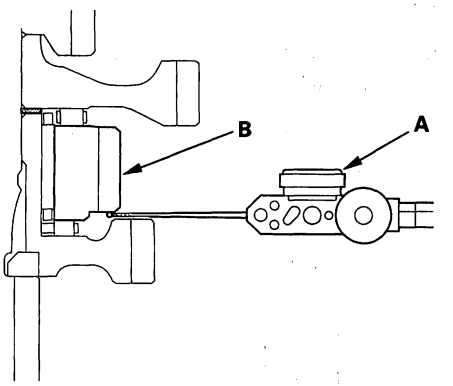


4. Measure the idler gear axial clearance in at least three places while moving the idler gear. Use the average as the actual clearance.

**Standard: 0.005—0.040 mm (0.0002—0.0016 in.)**

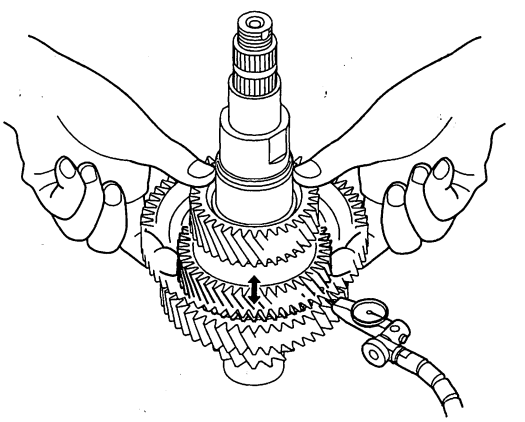

5. If the measurement is out of standard, remove the 61 mm washer and measure its thickness.



BACK

Protected by AR

6. Select and install a new washer, then recheck the clearance.

**WASHER, 61 mm**

| No. | Part Number | Thickness |
|---|---|---|
| A | 90582-RJF-T00 | 1.525 mm (0.0600 in.) |
| B | 90583-RJF-T00 | 1.505 mm (0.0593 in.) |
| C | 90584-RJF-T00 | 1.485 mm (0.0585 in.) |
| D | 90585-RJF-T00 | 1.465 mm (0.0577 in.) |
| E | 90586-RJF-T00 | 1.445 mm (0.0569 in.) |
| F | 90587-RJF-T00 | 1.425 mm (0.0561 in.) |
| G | 90588-RJF-T00 | 1.405 mm (0.0553 in.) |

7. Measure the clearance between the 50.8 mm collar (A) and the 50.8 mm washer (B) with a feeler gauge (C) in at least three places. Use the average as the actual clearance.

**Standard: 0.005—0.040 mm (0.0002—0.0016 in.)**

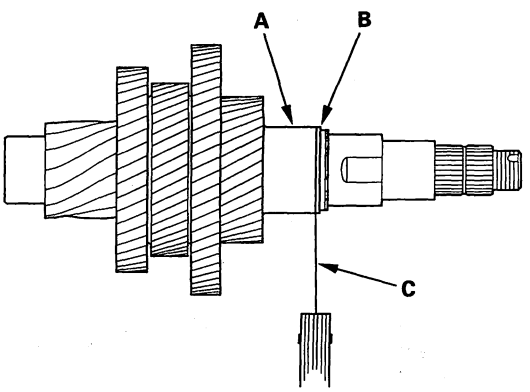


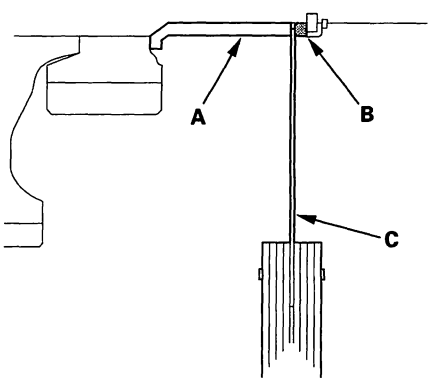


8. If the measurement is out of standard, remove the 50.8 mm washer and measure its thickness.

9. Select and install a new washer, then recheck the clearance.

**WASHER, 50.8 mm**

| No. | Part Number | Thickness |
|---|---|---|
| A | 90519-RJF-T00 | 1.91 mm (0.0752 in.) |
| B | 90520-RJF-T00 | 1.93 mm (0.0760 in.) |
| C | 90521-RJF-T00 | 1.95 mm (0.0768 in.) |
| D | 90522-RJF-T00 | 1.97 mm (0.0776 in.) |
| E | 90523-RJF-T00 | 1.99 mm (0.0783 in.) |
| F | 90524-RJF-T00 | 2.01 mm (0.0791 in.) |
| G | 90525-RJF-T00 | 2.03 mm (0.0799 in.) |
| H | 90526-RJF-T00 | 2.05 mm (0.0807 in.) |
| I | 90527-RJF-T00 | 2.07 mm (0.0815 in.) |
| J | 90528-RJF-T00 | 2.09 mm (0.0823 in.) |
| K | 90529-RJF-T00 | 2.11 mm (0.0831 in.) |
| L | 90530-RJF-T00 | 2.13 mm (0.0839 in.) |
| M | 90531-RJF-T00 | 2.15 mm (0.0846 in.) |
| N | 90532-RJF-T00 | 2.17 mm (0.0854 in.) |
| O | 90533-RJF-T00 | 2.19 mm (0.0862 in.) |
| P | 90534-RJF-T00 | 2.21 mm (0.0870 in.) |
| Q | 90535-RJF-T00 | 2.23 mm (0.0878 in.) |
| R | 90536-RJF-T00 | 2.25 mm (0.0886 in.) |
| S | 90537-RJF-T00 | 2.27 mm (0.0894 in.) |
| T | 90538-RJF-T00 | 2.29 mm (0.0902 in.) |
| U | 90539-RJF-T00 | 2.31 mm (0.0909 in.) |
| V | 90540-RJF-T00 | 2.33 mm (0.0917 in.) |
| W | 90541-RJF-T00 | 2.35 mm (0.0925 in.) |
| X | 90542-RJF-T00 | 2.37 mm (0.0933 in.) |
| Y | 90543-RJF-T00 | 2.39 mm (0.0941 in.) |
| Z | 90544-RJF-T00 | 2.41 mm (0.0949 in.) |
| AA | 90545-RJF-T00 | 2.43 mm (0.0957 in.) |
| AB | 90546-RJF-T00 | 2.45 mm (0.0965 in.) |

Protected by AR



## Countershaft Reassembly

**Special Tools Required**
Driver, 40 mm I.D. 07746-0030100

1. Install the 40.5 mm cotters (A), 2nd gear (B), thrust needle bearing (C), needle bearing (D), idler gear (E), thrust needle bearing (F), 61 mm washer (G), 1st gear (H), 4th gear (I), 50.8 mm collar (J), 50.8 mm washer (K), 42.2 mm cotters (L), cotter retainer (M), and snap ring (N) on the countershaft (O). Install the 40.5 mm cotters, idler gear, 1st gear, and 4th gear in the direction shown.

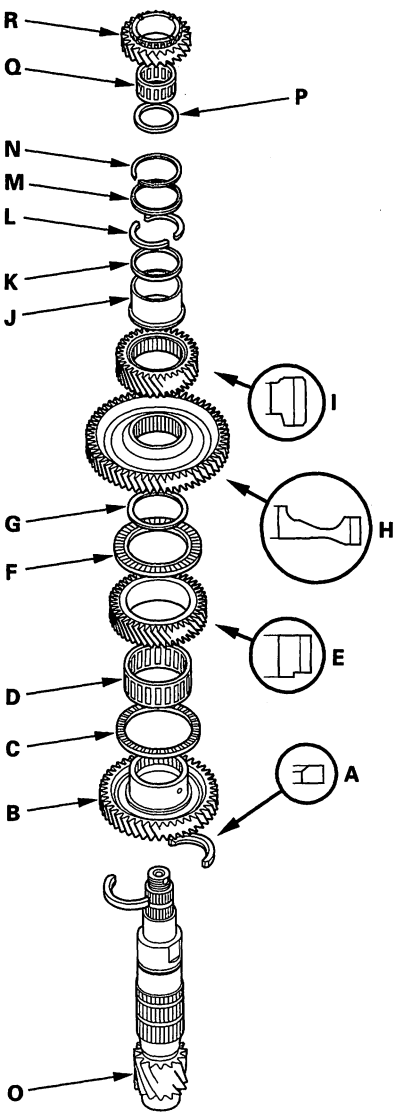


2. Install the thrust washer (P), needle bearing (Q), and 5th gear (R).

3. Slide the reverse selector hub (A) over the countershaft (B), then press it into place using the driver 40 mm I.D. and the press.

   NOTE: Some reverse selector hubs are not press-fitted, and can be installed without using the special tool and a press.

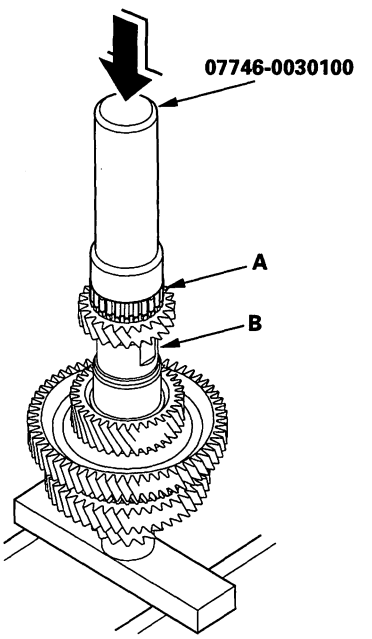


4. Install the reverse selector, reverse gear collar, needle bearing, and reverse gear over the reverse selector hub.



BACK

Protected by AR

5. Install the ball bearing (A) over the countershaft, then press it into place using the driver (40 mm I.D.) and the press.

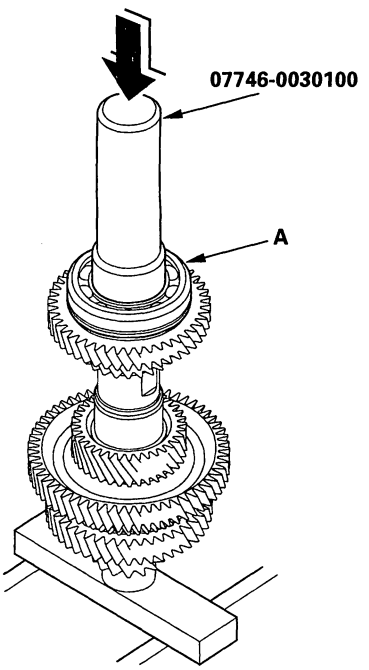


6. Install the conical spring washer (A) in the direction shown, and install the new locknut (B).

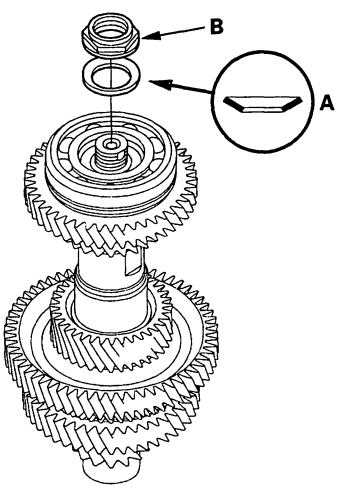


7. Hold the countershaft securely with a wrench and a vise, and tighten the locknut to 167 N·m (17.0 kgf·m, 123 lbf·ft).

NOTE:
- Use a torque wrench to tighten the locknut. Do not use an impact wrench.
- The locknut has left-hand threads.

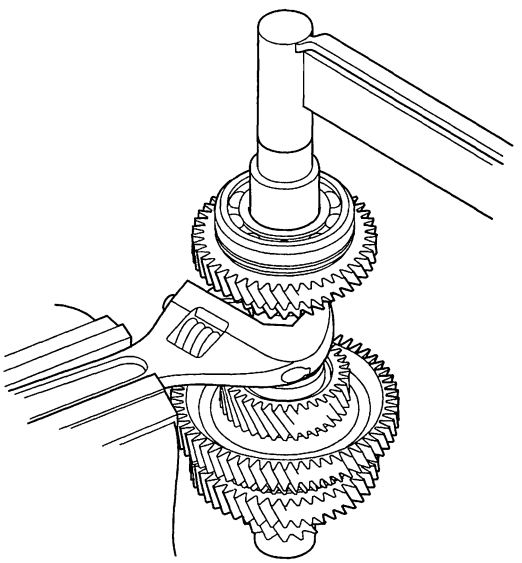

8. Stake the locknut into its shaft in depth (A) of 0.7—1.3 mm (0.03—0.05 in.) using a 3.5 mm punch (B).

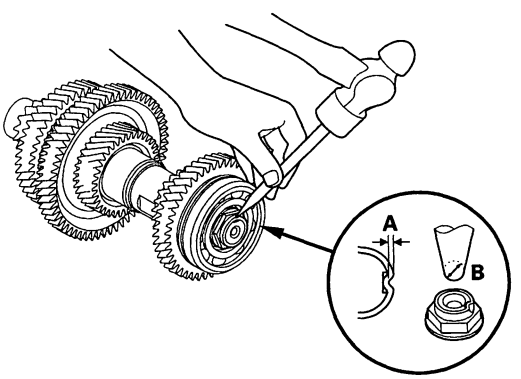

Protected by AR



## Secondary Shaft Disassembly

### Exploded View

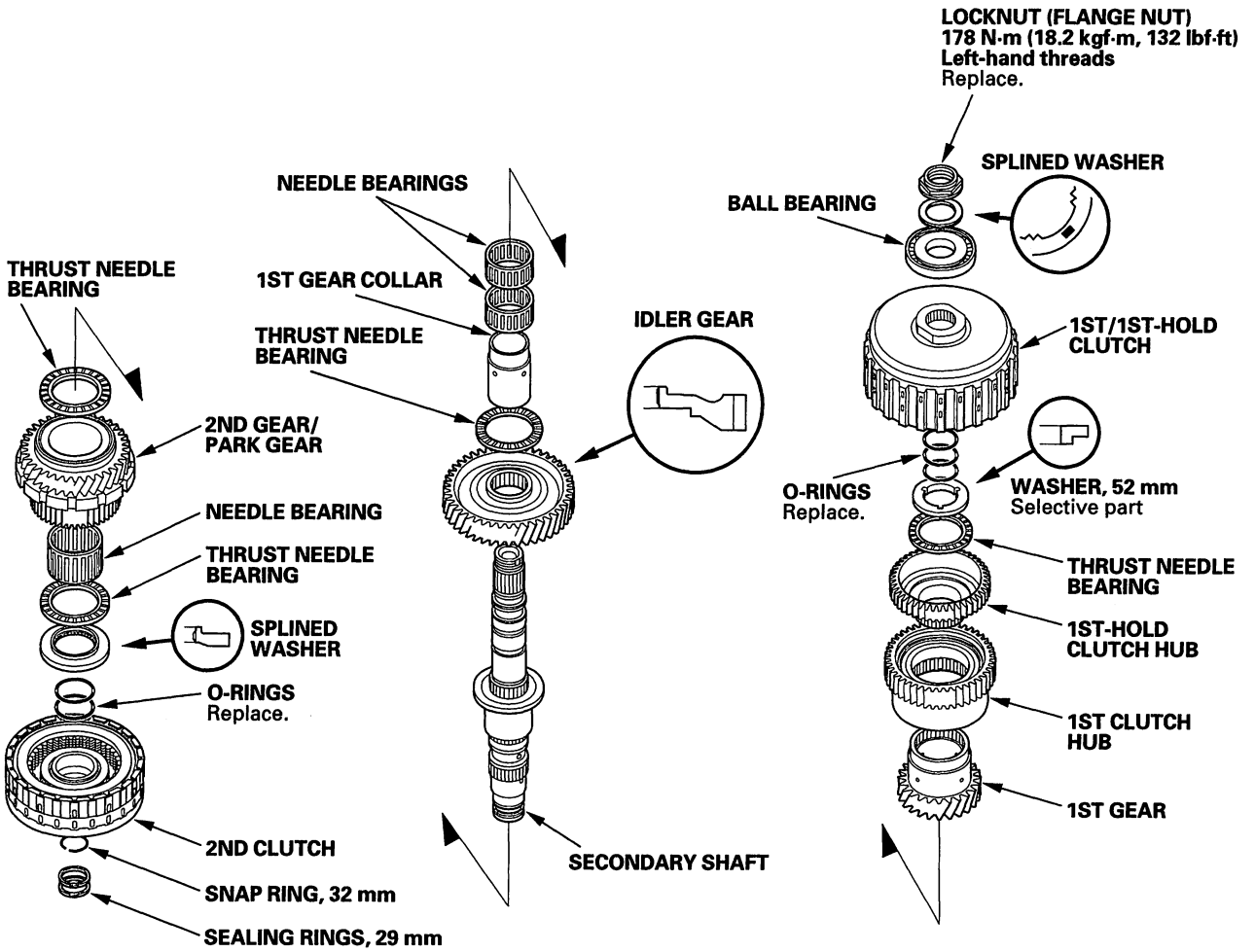




BACK

Protected by AR

**Special Tools Required**
Wrench, 40 x 42 mm 07XAA-002010A

NOTE: Refer to the Exploded View as needed during the following procedure.

1. Cut the lock tab (A) off the secondary shaft locknut (B) using a chisel (C).

   NOTE: Keep all of the chiseled particles out of the secondary shaft.

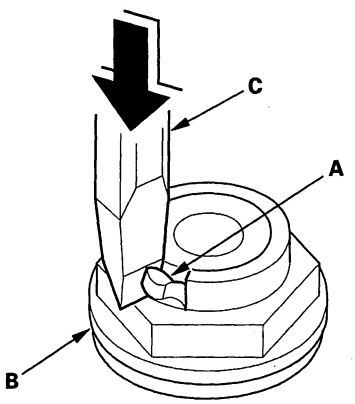


2. Place a V-block (A) on a vise (B), and put the secondary shaft (C) on the V-block and vise.

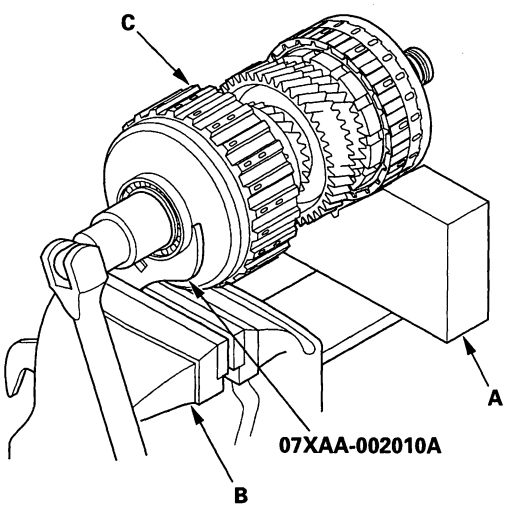


3. Attach the wrench (40 x 42 mm) onto the 1st clutch guide, and secure the wrench (40 x 42 mm) with the vise to hold the secondary shaft. Loosen the locknut, and remove it. Remove any burrs from splines on the shaft and splined washer.

4. Place the idler gear (A) on press bases (B), and place a shaft protector (C) between the secondary shaft (D) and the press to prevent damaging the secondary shaft.

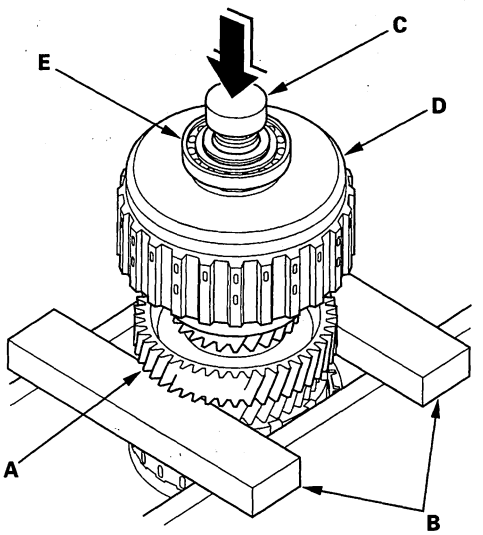


5. Press the secondary shaft out of the press-fitted bearing (E), and remove the secondary shaft while holding the underside of the secondary shaft. The secondary shaft falls down when pressing the secondary shaft out of the press-fitted bearing.

6. Remove the 1st/1st-hold clutch, 52 mm washer, thrust needle bearing, 1st gear assembly, needle bearings, 1st gear collar, thrust needle bearing, and idler gear.

7. Remove the 32 mm snap ring, and remove the 2nd clutch, splined washer, thrust needle bearing, needle bearing, 2nd gear/park gear, and thrust needle bearing.

8. Inspect the bearings for galling and rough movement.

9. Check the shaft bearing surfaces for scoring and excessive wear, and check shaft splines for excessive wear and damage.

10. Check the 1st gear axial clearance (see page 14-352), 1st gear one-way clutch (see page 14-354), and secondary shaft installation height (see page 14-359).

BACK

Protected by AR



## Secondary Shaft 1st Gear Axial Clearance Inspection

**Special Tools Required**
- Driver, 40 mm I.D. 07746-0030100
- Attachment, 30 mm I.D. 07746-0030300

1. Install the idler gear (A), thrust needle bearing (B), 1st gear collar (C), needle bearings (D), 1st gear assembly (E), thrust needle bearing (F), 52 mm washer (G), and 1st/1st-hold clutch (H) on the secondary shaft (I). Install the idler gear and 52 mm washer in the direction shown. Do not install the O-rings during inspection.

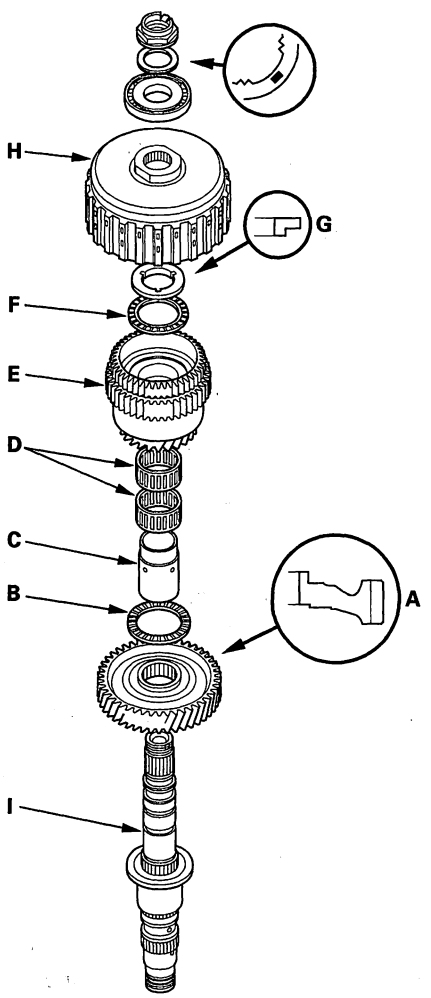


2. Install the ball bearing (A) over the 1st/1st-hold clutch guide using the driver (40 mm I.D.), the attachment (30 mm I.D.), and the press.

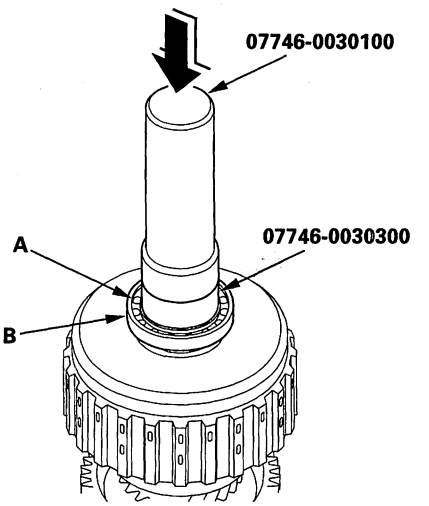


3. Install the splined washer with the marked side up over the ball bearing in the same manner as installing the ball bearing using the driver (40 mm I.D.), the attachment (30 mm I.D.), and the press.

4. Install the old locknut and tighten it to 29 N·m (3.0 kgf·m, 22 lbf·ft).

5. Set the dial indicator (A) on the 1st clutch hub (B).

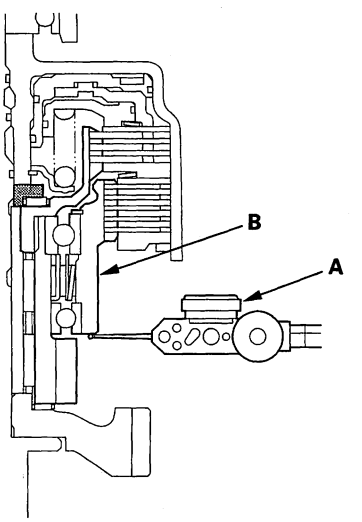




BACK

Protected by AR

6. Measure the 1st gear axial clearance in at least three places while moving the 1st gear. Use the average as the actual clearance.

**Standard: 0.100—0.145 mm (0.004—0.006 in.)**

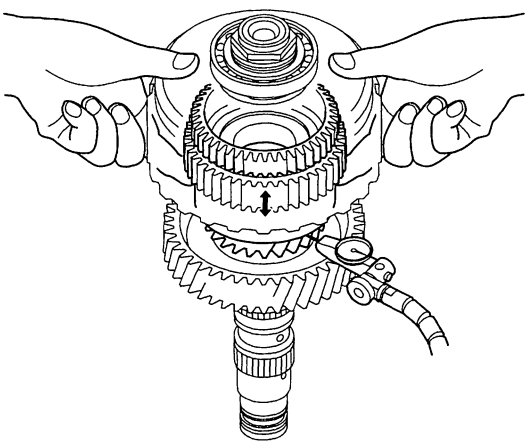

7. If the measurement is out of standard, remove the washer and measure its difference.

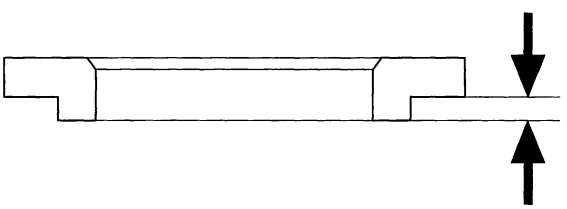

8. Select and install a new washer, then recheck the clearance.

**WASHER, 52 mm**

| No. | Part Number | Thickness |
|---|---|---|
| A | 90502-RWE-000 | 2.705 mm (0.107 in.) |
| B | 90503-RWE-000 | 2.680 mm (0.106 in.) |
| C | 90504-RWE-000 | 2.655 mm (0.105 in.) |
| D | 90505-RWE-000 | 2.630 mm (0.104 in.) |
| E | 90506-RWE-000 | 2.605 mm (0.103 in.) |
| F | 90507-RWE-000 | 2.580 mm (0.102 in.) |
| G | 90508-RWE-000 | 2.555 mm (0.101 in.) |
| H | 90509-RWE-000 | 2.530 mm (0.100 in.) |
| I | 90510-RWE-000 | 2.505 mm (0.099 in.) |
| J | 90511-RWE-000 | 2.480 mm (0.098 in.) |
| K | 90512-RWE-000 | 2.455 mm (0.097 in.) |
| L | 90513-RWE-000 | 2.430 mm (0.096 in.) |
| M | 90514-RWE-000 | 2.405 mm (0.095 in.) |

Protected by AR



## 1st Gear One-way Clutch Inspection

1. Hold the 1st-hold clutch hub (A), and turn the 1st gear (B) in the direction shown to be sure it turns freely. Also make sure the 1st gear locks in the opposite direction.

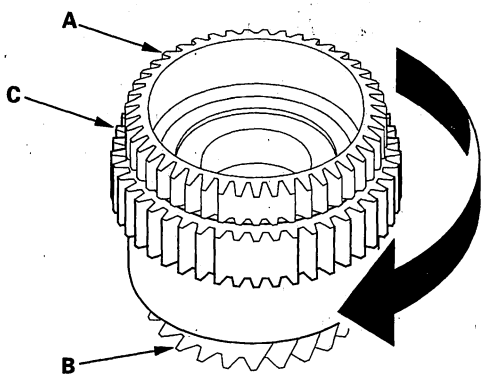


2. If any problem occurs on the 1st gear one-way clutch, replace the 1st clutch hub (C). The 1st gear one-way clutch is not available separately from the 1st clutch hub.

3. Also check the 1st gear and the 1st-hold clutch hub for wear and damage. If the 1st gear and 1st-hold clutch hub are worn or damaged, replace the damaged part, refer to 1st Clutch Hub Replacement (see page 14-355).



BACK

Protected by AR

## 1st Clutch Hub Replacement

**Special Tools Required**
- Driver 07749-0010000
- Driver attachment 07947-6340500
- Attachment, 78 x 90 mm 07GAD-SD40101

1. Remove the 1st-hold clutch hub (A) from 1st gear (B) using the driver, the driver attachment, and the press.

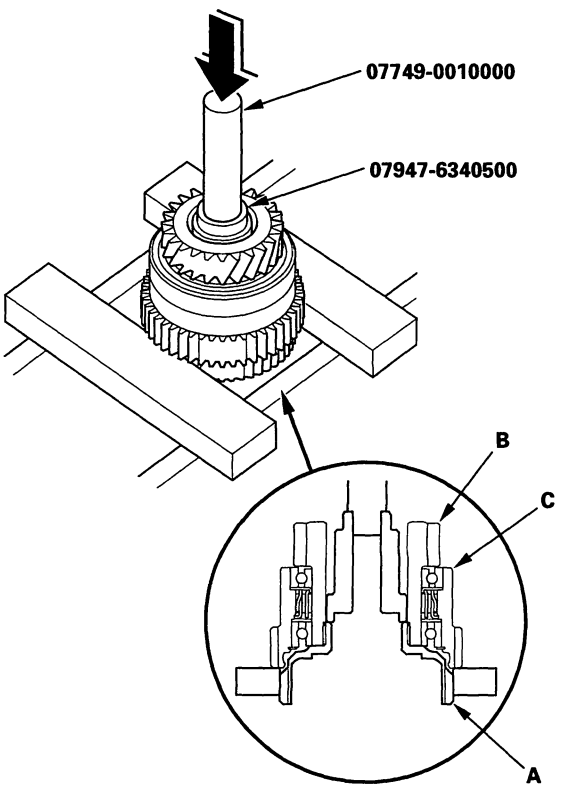


2. Remove the 1st clutch hub (C) from 1st gear.

3. Install the new 1st clutch hub (A) over 1st gear (B), and install the 1st-hold clutch hub (C) in 1st gear.

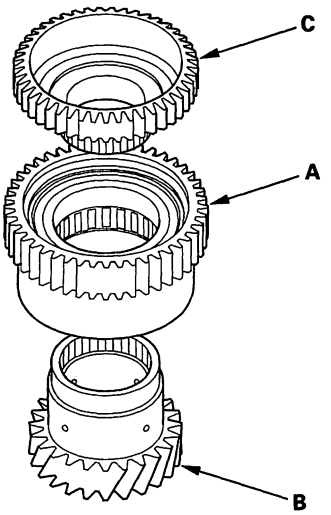


4. Install the 1st-hold clutch hub (A) in 1st gear (B) using the driver, the attachment (78 x 90 mm), and the press.

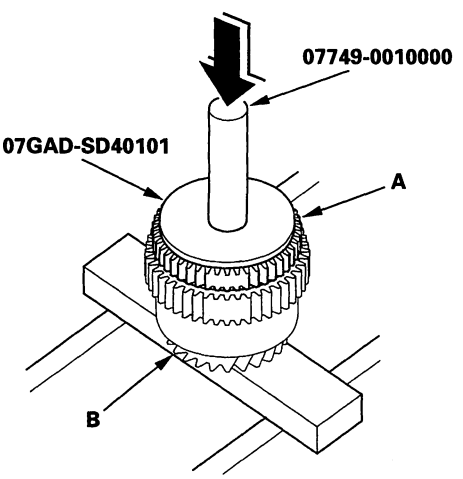

Protected by AR



## Secondary Shaft Reassembly

**Special Tools Required**
- Driver, 40 mm I.D. 07746-0030100
- Attachment, 30 mm I.D. 07746-0030300
- Wrench, 40 x 42 mm 07XAA-002010A

1. Install the thrust needle bearing (A), needle bearing (B), 2nd gear/park gear (C), thrust needle bearing (D), and splined washer (E) in the direction shown on the secondary shaft (F).

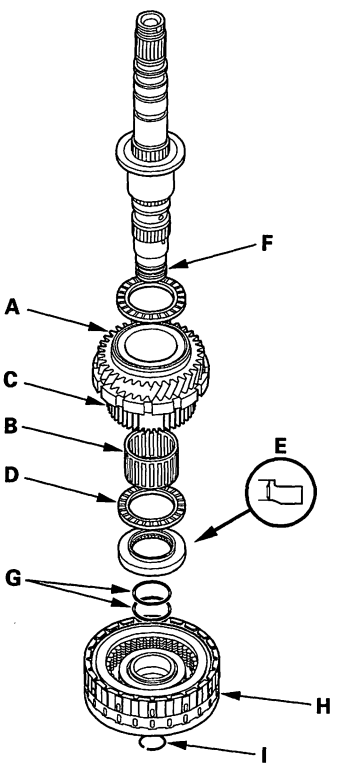


2. Wrap the shaft splines with tape, and install the new O-rings (G) in the 2nd clutch O-ring grooves, then remove the tape.

   NOTE: To prevent damage to the O-rings, be sure to install the O-rings after installing the splined washer.

3. Install the 2nd clutch (H) on the secondary shaft, and secure the 2nd clutch with the snap ring (I).

4. Install the idler gear (A) in the direction shown, thrust needle bearing (B), 1st gear collar (C), needle bearings (D), 1st gear assembly (E), thrust needle bearing (F), and 52 mm washer (G) in the direction shown on the secondary shaft (H).

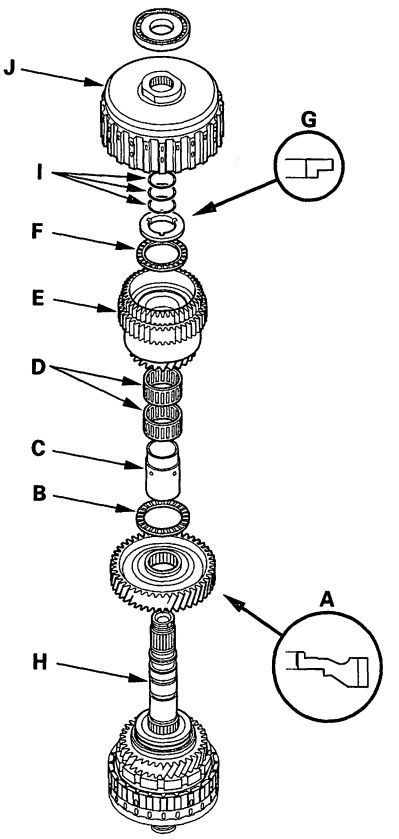


5. Wrap the shaft splines with tape, and install the new O-rings (I) in 1st/1st-hold clutch O-ring grooves, then remove the tape.

   NOTE: To prevent damage to the O-rings, be sure to install the O-rings after installing the 1st gear collar and 52 mm washer.

6. Install the 1st/1st-hold clutch (J).



BACK

Protected by AR

7. Install the ball bearing (A) over the 1st/1st-hold clutch guide (B) using the driver (40 mm I.D.), the attachment (30 mm I.D.), and the press.

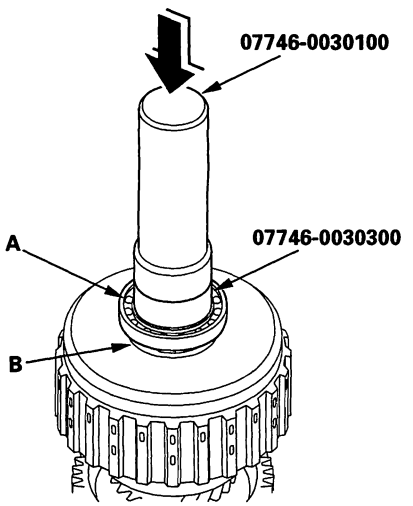


8. Install the new splined washer (A) with the marked side (B) up over the ball bearing using the driver (40 mm I.D.), the attachment (30 mm I.D.), and the press.

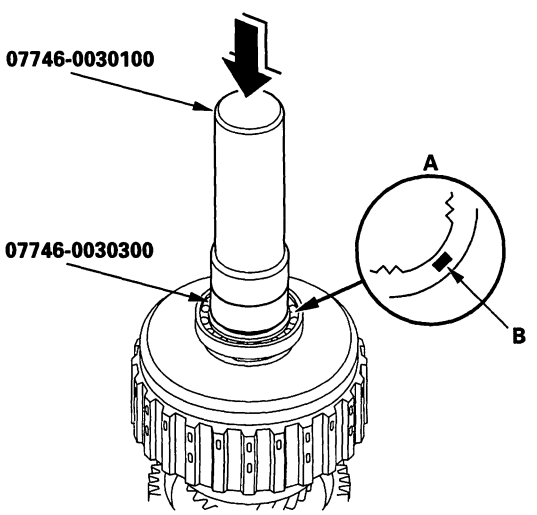


9. Install the new locknut.

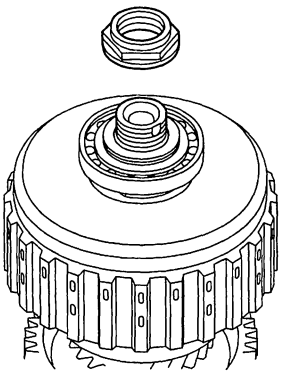

10. Place a V-block (A) on a vise (B), and put the secondary shaft (C) on the V-block and vise.

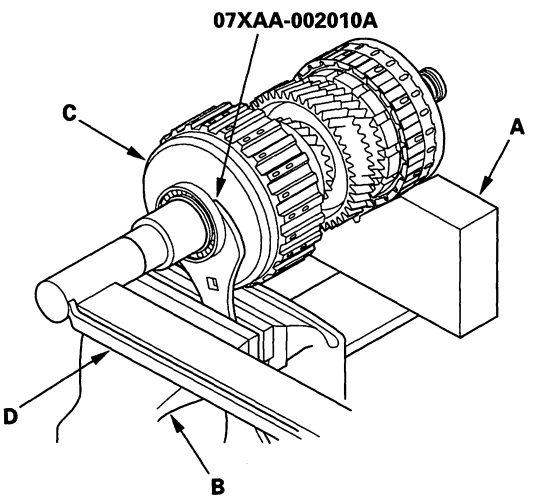


11. Attach the wrench (40 x 42 mm) onto the top of the 1st clutch guide, and secure the wrench (40 x 42 mm) with the vise to hold the secondary shaft. Tighten the locknut to 178 N·m (18.2 kgf·m, 132 lbf·ft) with the torque wrench (D).

NOTE:
- Use a torque wrench to tighten the locknut. Do not use an impact wrench.
- The locknut has left-hand threads.

(cont'd)

Protected by AR



## Secondary Shaft Reassembly (cont'd)

12. Stake the locknut to a depth (A) of 0.7—1.3 mm (0.03—0.05 in.) using a 3.5 mm punch (B).

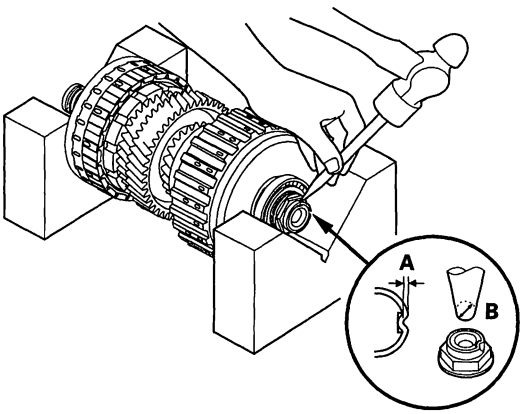




BACK

Protected by AR

## Secondary Shaft Installation Height Inspection/Adjustment

1. Install the thrust needle bearing (A) in the torque converter housing (B) in the direction shown, and install the secondary shaft assembly (C).

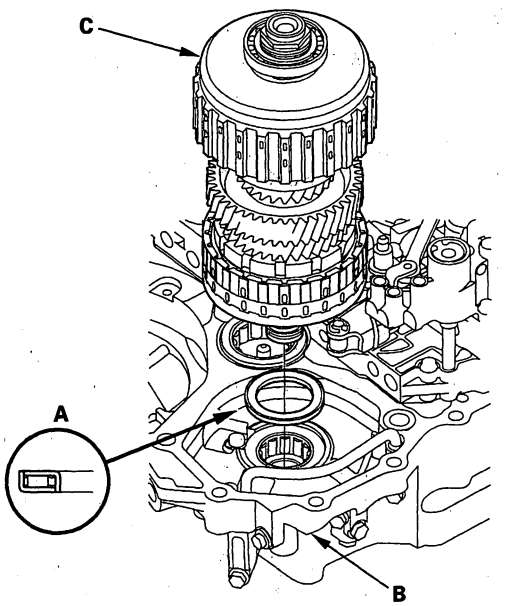


2. Install the new gasket (A) on the torque converter housing.

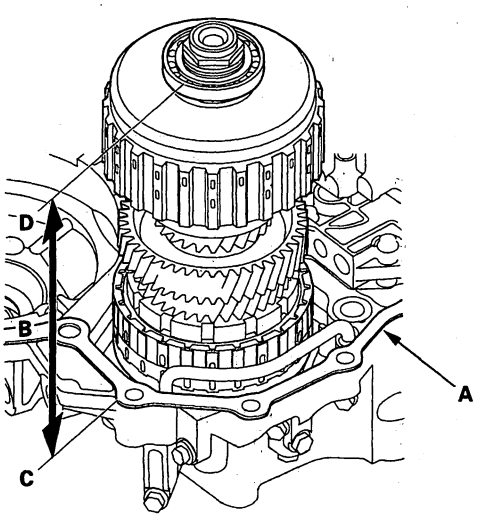


3. Measure the height (B) of the secondary shaft installation between the surface (C) of the gasket and the top of the ball bearing outer race (D), then note the measurement.

**Secondary Shaft Cutaway View:**

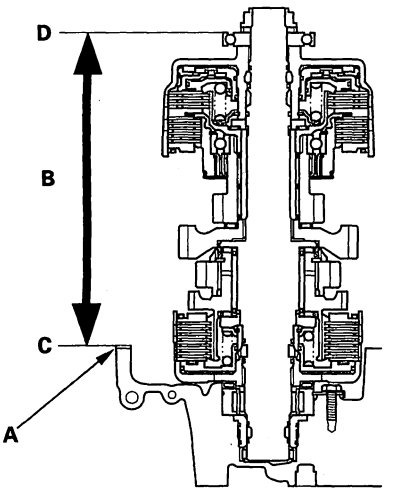


(cont'd)

Protected by AR



## Secondary Shaft Installation Height Inspection/Adjustment (cont'd)

4. Remove the 65 mm thrust shim (A) from the transmission housing, and measure its thickness.

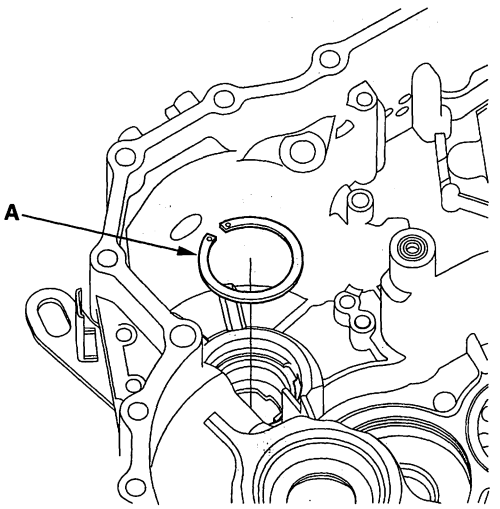


5. Calculate the thickness of the 65 mm thrust shim using the formula.

**Formula:**
**65 mm Thrust Shim Thickness**
**= Secondary Shaft Installation Height Standard**
**— Measurement**

**Secondary Shaft Installation Height Standard:**
**228.04—228.13 mm (8.9779—8.9815 in.)**

6. Select the 65 mm thrust shim from the following table.

**THRUST SHIM, 65 mm**

| No. | Part Number | Thickness |
|---|---|---|
| 0A | 90460-RDK-000 | 0.80 mm (0.031 in.) |
| A | 90461-RDK-010 | 0.84 mm (0.033 in.) |
| B | 90462-RDK-010 | 0.88 mm (0.035 in.) |
| C | 90463-RDK-010 | 0.92 mm (0.036 in.) |
| D | 90464-RDK-010 | 0.96 mm (0.038 in.) |
| E | 90465-RDK-010 | 1.00 mm (0.039 in.) |
| F | 90466-RDK-010 | 1.04 mm (0.041 in.) |
| G | 90467-RDK-010 | 1.08 mm (0.043 in.) |
| H | 90468-RDK-010 | 1.12 mm (0.044 in.) |
| I | 90469-RDK-010 | 1.16 mm (0.046 in.) |
| J | 90470-RDK-010 | 1.20 mm (0.047 in.) |
| K | 90471-RDK-010 | 1.24 mm (0.049 in.) |
| L | 90472-RDK-010 | 1.28 mm (0.050 in.) |
| M | 90473-RDK-010 | 1.32 mm (0.052 in.) |
| N | 90474-RDK-010 | 1.36 mm (0.054 in.) |
| O | 90475-RDK-010 | 1.40 mm (0.055 in.) |
| P | 90476-RDK-010 | 1.44 mm (0.057 in.) |
| Q | 90477-RDK-010 | 1.48 mm (0.058 in.) |
| R | 90478-RDK-010 | 1.52 mm (0.060 in.) |
| S | 90479-RDK-010 | 1.56 mm (0.061 in.) |
| T | 90480-RDK-010 | 1.60 mm (0.063 in.) |
| U | 90481-RDK-000 | 1.64 mm (0.065 in.) |
| V | 90482-RDK-000 | 1.68 mm (0.066 in.) |
| W | 90483-RDK-000 | 1.72 mm (0.068 in.) |
| X | 90484-RDK-000 | 1.76 mm (0.069 in.) |
| Y | 90485-RDK-000 | 1.80 mm (0.071 in.) |
| Z | 90486-RDK-000 | 1.84 mm (0.072 in.) |
| AA | 90487-RDK-000 | 1.88 mm (0.074 in.) |
| AB | 90488-RDK-000 | 1.92 mm (0.076 in.) |
| AC | 90489-RDK-000 | 1.96 mm (0.077 in.) |
| AD | 90490-RDK-000 | 2.00 mm (0.079 in.) |
| AE | 90491-RDK-000 | 2.04 mm (0.080 in.) |
| AF | 90492-RDK-000 | 2.08 mm (0.082 in.) |
| AG | 90493-RDK-000 | 2.12 mm (0.083 in.) |
| AH | 90494-RDK-000 | 2.16 mm (0.085 in.) |
| AI | 90495-RDK-000 | 2.20 mm (0.087 in.) |
| AJ | 90496-RDK-000 | 2.24 mm (0.088 in.) |
| AK | 90497-RDK-000 | 2.28 mm (0.090 in.) |
| AL | 90498-RDK-000 | 2.32 mm (0.091 in.) |

7. Install the thrust shim in the transmission housing.



BACK

Protected by AR

## Intermediary Shaft Disassembly, Inspection, and Reassembly

1. Remove the 26.5 mm washer, snap ring, cotter retainer, and cotters from the third shaft.

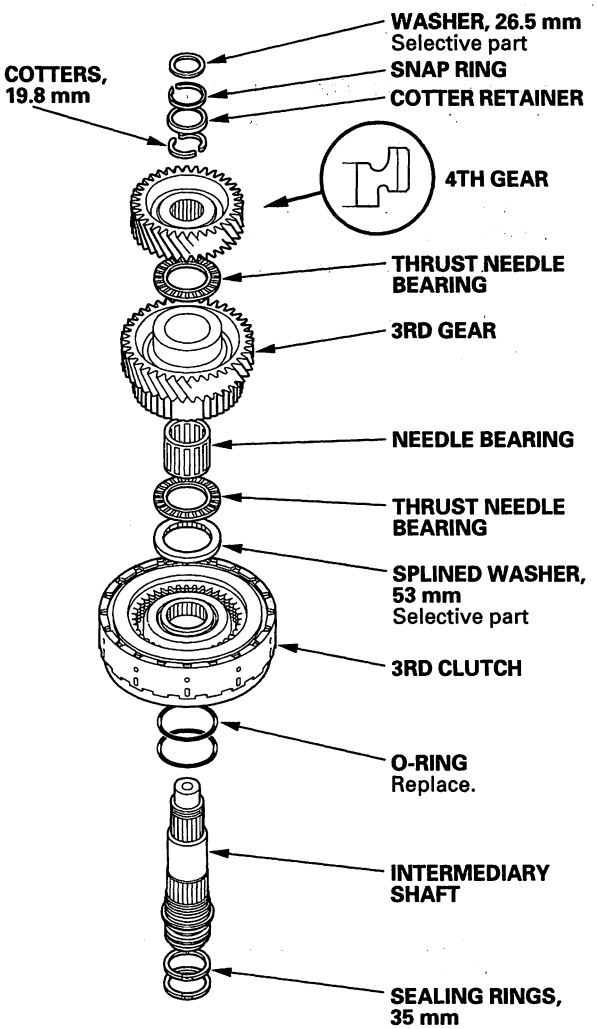


2. Remove the intermediary shaft 4th gear using the press (see page 14-362), and disassemble the shaft and gears.

3. Inspect the bearings for galling and rough movement.

4. Check the shaft bearing surfaces for scoring and excessive wear, and check the shaft splines for excessive wear and damage.

5. Check the sealing rings for excessive wear and damage.

6. Check the 3rd gear axial clearance (see page 14-363), and intermediary shaft installation height (see page 14-365).

7. Before installing the O-rings, wrap the shaft splines with tape to prevent damage to the O-rings.

8. Lubricate all parts with ATF, and reassemble the shaft and gears.

9. Install the press-fitted 4th gear using the driver (40 mm I.D.) and the press (see page 14-362) in the direction shown.

Protected by AR



## Intermediary Shaft 4th Gear Removal

1. Place 4th gear (A) on press bases (B), and place a shaft protector (C) between the intermediary shaft (D) and the press to prevent damaging the intermediary shaft.

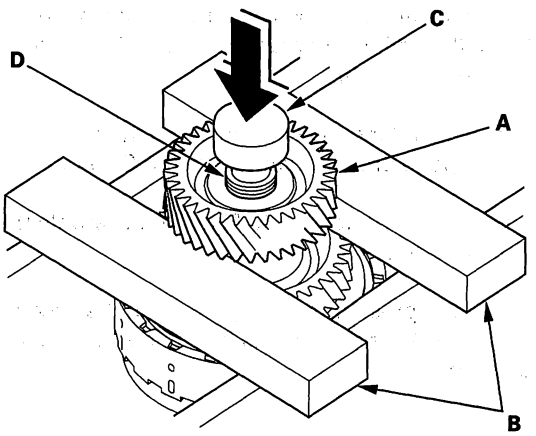


2. Press the intermediary shaft out of the press-fitted 4th gear, and remove the intermediary shaft while holding the underside of the intermediary shaft. The intermediary shaft falls down when pressing the intermediary shaft out of the press-fitted gear.

3. Remove the remaining parts from the intermediary shaft.

## Intermediary Shaft 4th Gear Installation

**Special Tools Required**
Driver, 40 mm I.D. 07746-0030100

1. Wrap the shaft splines with tape, and install the new O-rings in the 3rd clutch O-ring grooves, then remove the tape.

2. Install the 3rd clutch, 53 mm splined washer, thrust needle bearing, needle bearing, 3rd gear, thrust needle bearing on the intermediary shaft.

3. Install 4th gear (A) using the driver (40 mm I.D.) and the press.

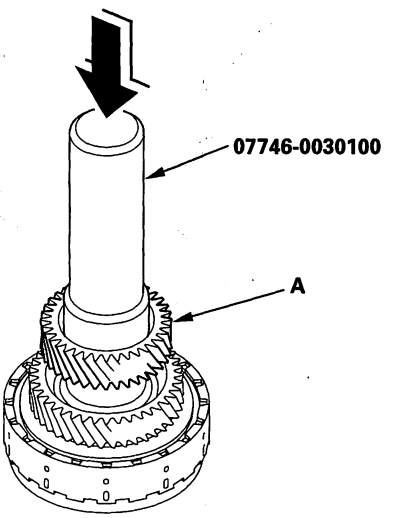


4. Install the 19.8 mm cotters, cotter retainer, and snap ring.

5. Install the 26.5 mm washer on the top of the intermediary shaft.



BACK

Protected by AR

# Intermediary Shaft 3rd Gear Axial Clearance Inspection

**Special Tools Required**
Driver, 40 mm I.D. 07746-0030100

1. Install the 3rd clutch (A), 53 mm splined washer (B), thrust needle bearing (C), needle bearing (D), 3rd gear (E), and thrust needle bearing (F) on the intermediary shaft (G). Do not install the O-rings during inspection.

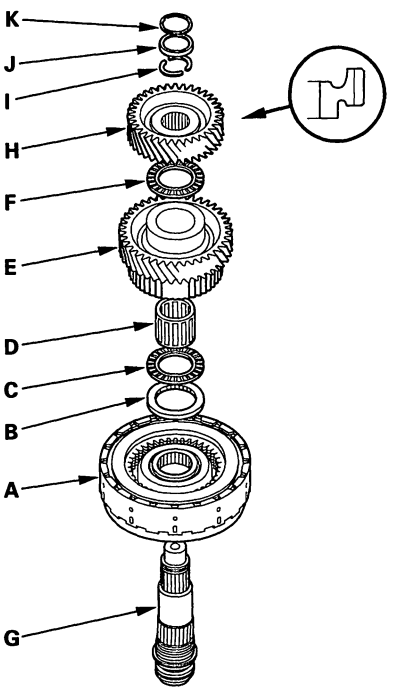


2. Install 4th gear (H) using the driver (40 mm I.D.) and the press.

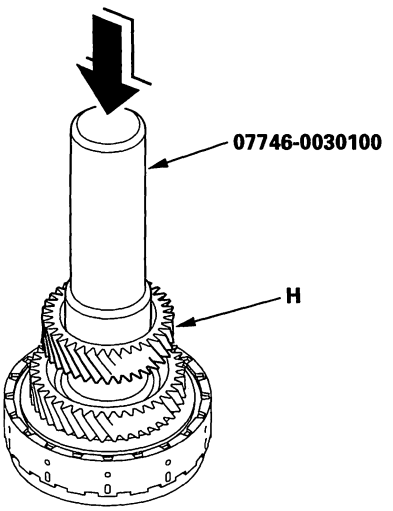


3. Install the cotters (I), cotter retainer (J), and snap ring (K).

4. Set the dial indicator (A) on 4th gear (B).

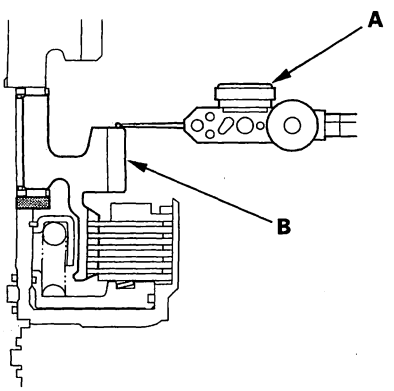


(cont'd)

Protected by AR



## Intermediary Shaft 3rd Gear Axial Clearance Inspection (cont'd)

5. Measure the 4th gear axial clearance in at least three places while moving 4th gear. Use the average as the actual clearance.

   **Standard: 0.005—0.045 mm (0.0002—0.0018 in.)**

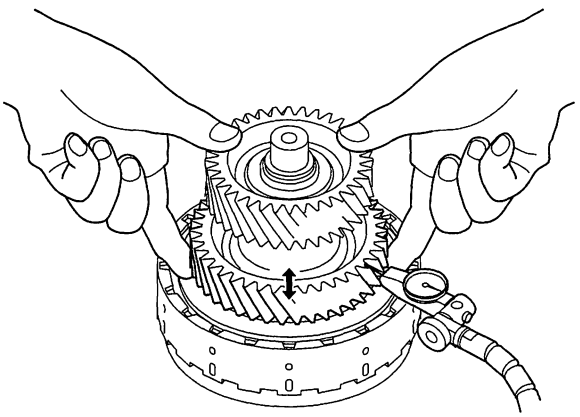

6. If the measurement is out of standard, remove the splined washer and measure its thickness.

7. Select and install a new splined washer, then recheck the clearance.

**SPLINED WASHER, 53 mm**

| No. | Part Number | Thickness |
|---|---|---|
| A | 90546-RDK-000 | 3.995 mm (0.1573 in.) |
| B | 90547-RDK-000 | 4.015 mm (0.1581 in.) |
| C | 90548-RDK-000 | 4.035 mm (0.1589 in.) |
| D | 90549-RDK-000 | 4.055 mm (0.1596 in.) |
| E | 90550-RDK-000 | 4.075 mm (0.1604 in.) |
| F | 90551-RDK-000 | 4.095 mm (0.1612 in.) |
| G | 90552-RDK-000 | 4.115 mm (0.1620 in.) |
| H | 90553-RDK-000 | 4.135 mm (0.1628 in.) |
| I | 90554-RDK-000 | 4.155 mm (0.1636 in.) |
| J | 90555-RDK-000 | 4.175 mm (0.1644 in.) |
| K | 90556-RDK-000 | 4.195 mm (0.1652 in.) |
| L | 90557-RDK-000 | 4.215 mm (0.1659 in.) |
| M | 90558-RDK-000 | 4.235 mm (0.1667 in.) |
| N | 90559-RDK-000 | 4.255 mm (0.1675 in.) |



BACK

Protected by AR

## Intermediary Shaft Installation Height Inspection/Adjustment

1. Install the intermediary shaft (A) in the torque converter housing, and install the 26.5 mm washer (B) on the intermediary shaft.

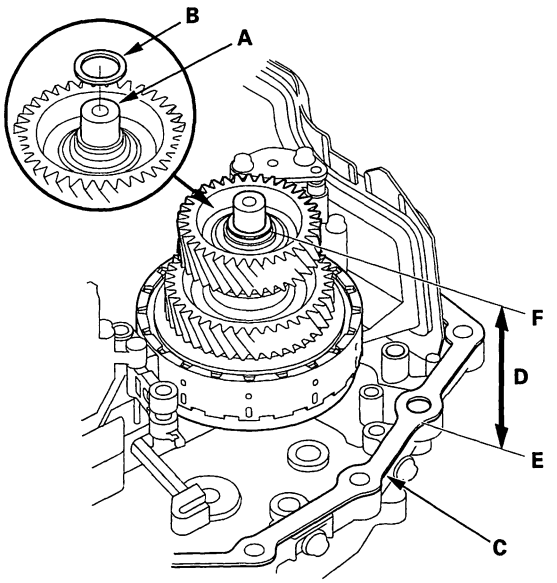


2. Install the new gasket (C) on the torque converter housing.

3. Measure the height (D) of the intermediary shaft installation between the surface (E) of the gasket and the surface of the 26.5 mm washer (F).

   **Intermediary Shaft Installation Height Standard:**
   **137.285—137.385 mm (5.40491—5.40885 in.)**

   **Intermediary Shaft Cutaway View:**

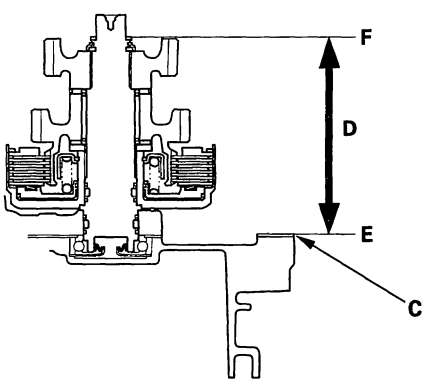


4. If the measurement is out of standard, remove the 26.5 mm washer and measure its thickness.

5. Select and install a new washer, then recheck the installation height.

**WASHER, 26.5 mm**

| No. | Part Number | Thickness |
|---|---|---|
| A | 90564-RDK-000 | 1.05 mm (0.041 in.) |
| B | 90565-RDK-000 | 1.13 mm (0.044 in.) |
| C | 90566-RDK-000 | 1.21 mm (0.048 in.) |
| D | 90567-RDK-000 | 1.29 mm (0.051 in.) |
| E | 90568-RDK-000 | 1.37 mm (0.054 in.) |
| F | 90569-RDK-000 | 1.45 mm (0.057 in.) |
| G | 90570-RDK-000 | 1.53 mm (0.060 in.) |
| H | 90571-RDK-000 | 1.61 mm (0.063 in.) |
| I | 90572-RDK-000 | 1.69 mm (0.067 in.) |
| J | 90573-RDK-000 | 1.77 mm (0.070 in.) |
| K | 90574-RDK-000 | 1.85 mm (0.073 in.) |
| L | 90575-RDK-000 | 1.93 mm (0.076 in.) |
| M | 90576-RDK-000 | 2.01 mm (0.079 in.) |
| N | 90577-RDK-000 | 2.09 mm (0.082 in.) |

Protected by AR



## Clutch Disassembly

**Special Tools Required**
- Clutch spring compressor attachment 07LAE-PX40100 or 07HAE-PL50101
- Clutch spring compressor bolt assembly 07GAE-PG40200 or 07GAE-PG4020A

1. Remove the snap ring (A) with a screwdriver (B).

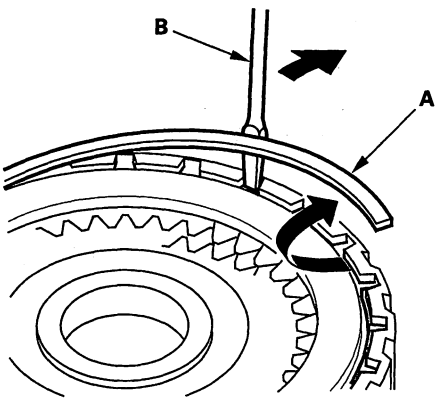


2. Remove the 1st clutch end plate (A), 1st clutch discs (B) (5), 1st clutch waved-plates (C) (5), disc spring (D), 1st-hold clutch plate B (E), 1st-hold clutch discs (F) (3), 1st-hold clutch waved-plates (G) (2), and 1st-hold clutch flat-plate (H) from the 1st/1st-hold clutch drum (I).

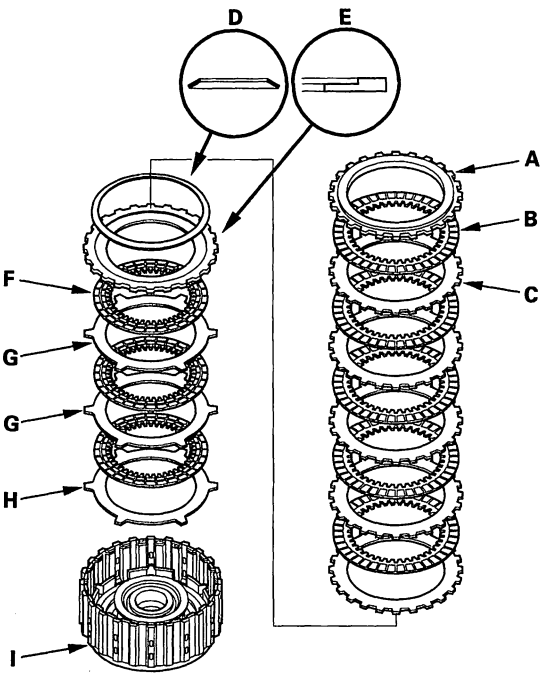


3. Make reference marks on the clutch waved-plates.



BACK

Protected by AR

4. Remove the clutch end plate (A), clutch discs (B) (7), clutch waved-plates (C) (3), and clutch flat-plates (D) (4) from the 2nd clutch drum (E).

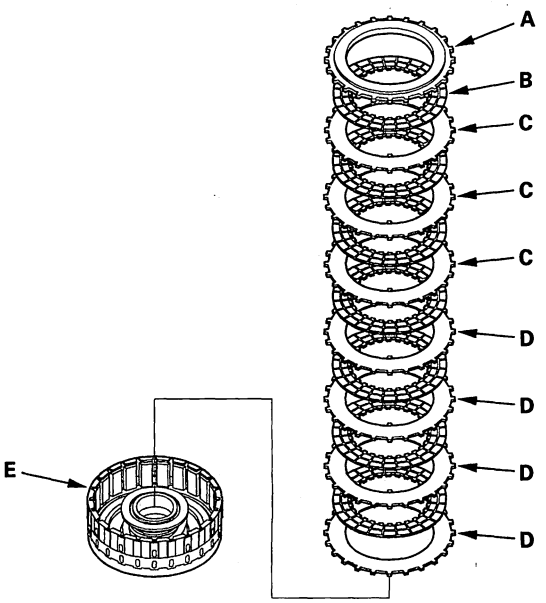


5. Make reference marks on the clutch waved-plates.

6. Remove the clutch end plate (A), clutch discs (B) (5), clutch waved-plates (C) (2), clutch flat-plates (D) (3), and disc spring (E) from the 3rd clutch drum (F).

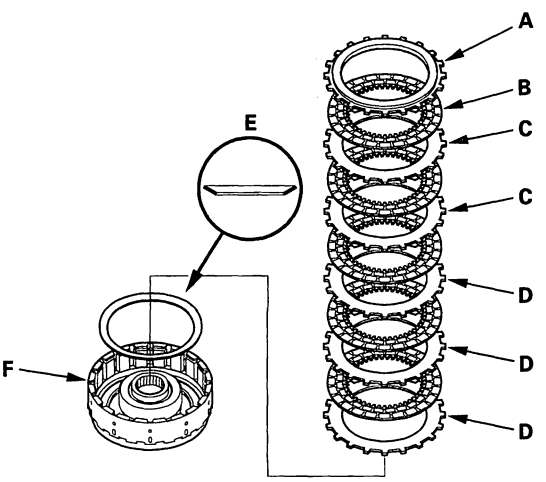


7. Make reference marks on the clutch waved-plates.

8. Remove the clutch end plate (A), clutch discs (B) (5), clutch waved-plates (C) (2), clutch flat-plates (D) (3), and disc spring (E) from the 4th clutch drum (F).

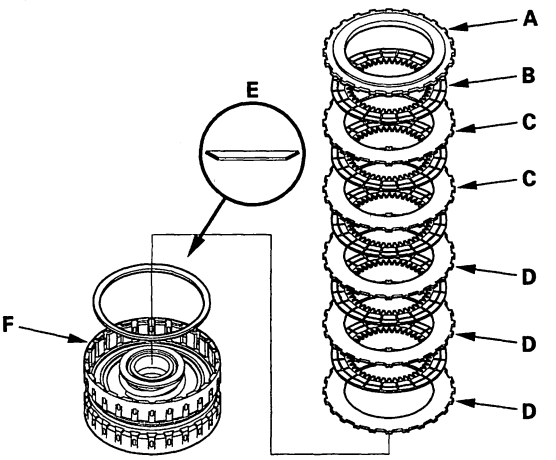


9. Make reference marks on the clutch waved-plates.

10. Remove the clutch end plate (A), clutch discs (B) (5), clutch waved-plates (C) (2), clutch flat-plates (D) (3), and disc spring (E) from the 5th clutch drum (F).

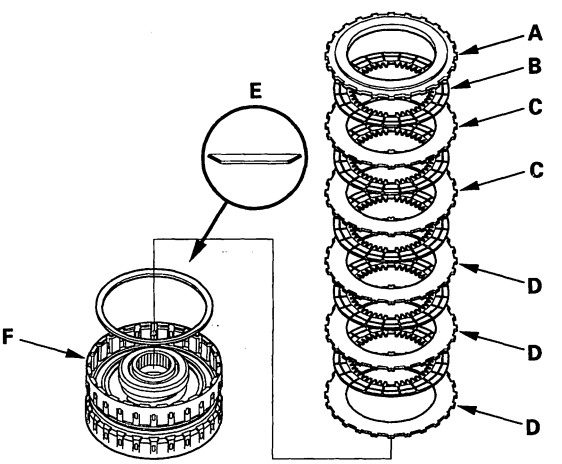


11. Make reference marks on the clutch waved-plates.

(cont'd)

Protected by AR



## Clutch Disassembly (cont'd)

12. Install the clutch spring compressor attachments and the clutch spring compressor bolt assembly.

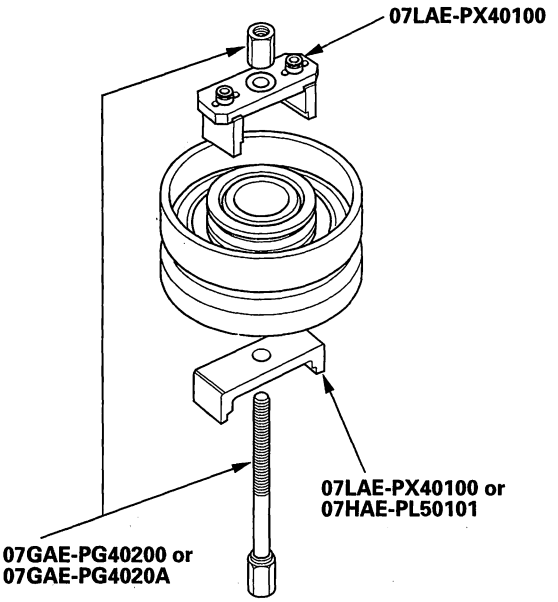


13. Be sure the clutch spring compressor attachment (A) is adjusted to have full contact with the spring retainer (B) on the 1st, 2nd, and 4th clutches.

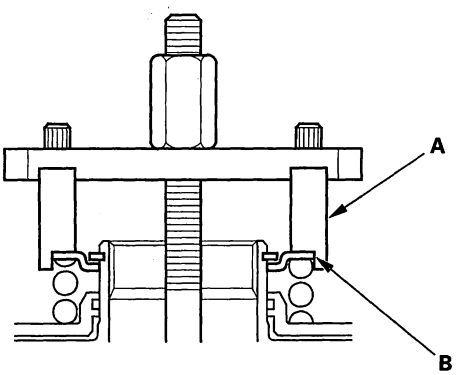


14. If either end of the clutch spring compressor attachment is set over an area of the spring retainer that is unsupported by the return spring, the retainer may be damaged.

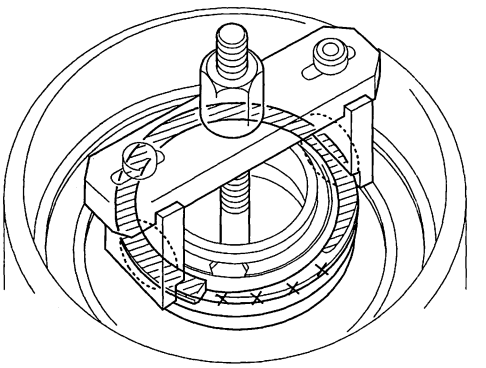

15. Set the clutch spring compressor attachment (A) on the spring retainer (B) of the 3rd and 5th clutches so the clutch spring compressor attachment works on the clutch return spring (C).

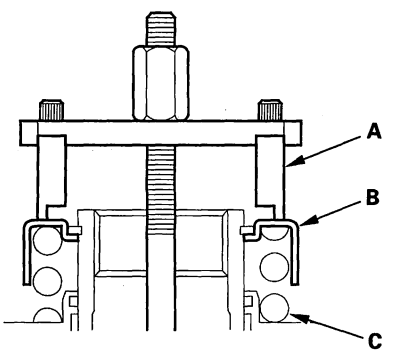




BACK

Protected by AR

16. If either end of the clutch spring compressor attachment is not set over the clutch return spring end (A), the retainer may be damaged.

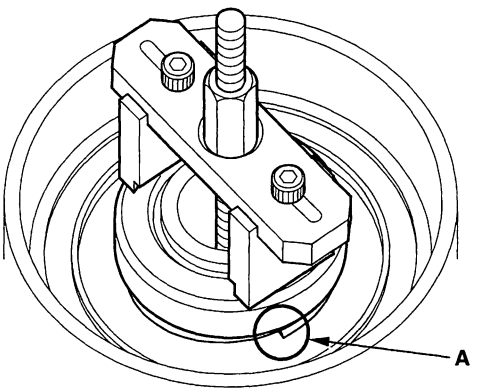


17. Compress the return spring until the snap ring can be removed.

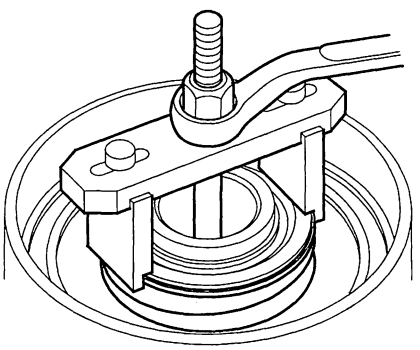

18. Remove the snap ring with the snap ring pliers.

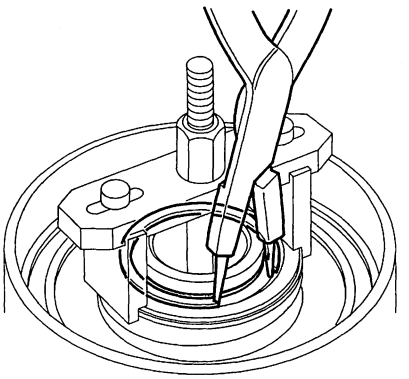

19. Remove the clutch spring compressor attachments and the clutch spring compressor bolt assembly.

20. Remove the snap ring (A), spring retainer (B), and return spring (C).

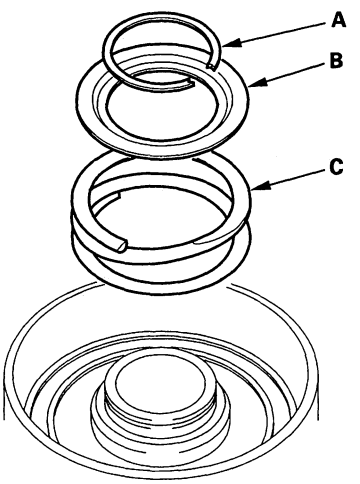


(cont'd)

Protected by AR



## Clutch Disassembly (cont'd)

21. Wrap a shop rag around the clutch drum, and apply air pressure to the fluid passage to remove the piston. Place a finger tip on the other passage while applying air pressure.

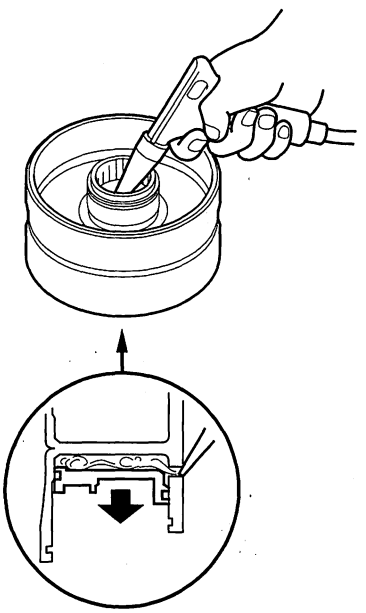

22. Remove the 1st/1st-hold clutch piston (A) from the clutch drum (B), and remove the O-rings from the 1st clutch piston.

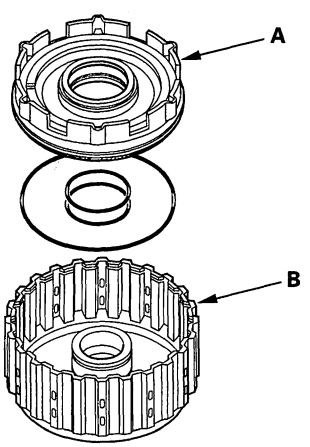


23. Remove the 1st-hold clutch piston (A) from the 1st clutch piston (B), and remove the O-rings from the 1st-hold clutch piston.

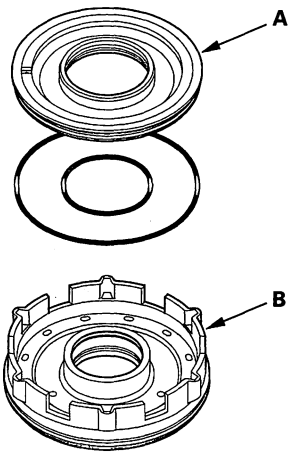


24. Remove the clutch piston, and remove the O-rings from the 2nd, 3rd, 4th, and 5th clutch pistons.

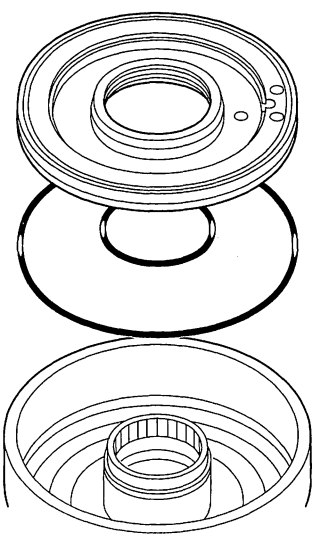



BACK

Protected by AR

## Clutch Inspection

1. Inspect the clutch pistons and clutch piston check valves (A).

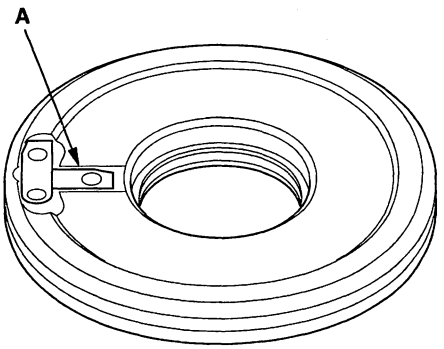


2. If the clutch piston check valve is loose or damaged, replace the clutch piston.

3. Check the spring retainer for wear and damage.

4. If the spring retainer is worn or damaged, replace it.

5. Inspect the clutch discs, clutch plates, and clutch end plate for wear, damage, and discoloration.

   **Clutch Discs**
   **Standard Thickness: 1.94 mm (0.076 in.)**

   **Clutch Flat-plates and Clutch Waved-plates**
   **Standard Thickness**

| | |
|---|---|
| **1st clutch:** | **1.6 mm (0.063 in.)** |
| **1st-hold clutch:** | **1.8 mm (0.071 in.)** |
| **2nd clutch:** | **1.8 mm (0.071 in.)** |
| **3rd clutch:** | **2.0 mm (0.079 in.)** |
| **4th clutch:** | **1.6 mm (0.063 in.)** |
| **5th clutch:** | **1.6 mm (0.063 in.)** |

6. If the clutch discs are worn or damaged, replace them as a set. If the clutch discs are replaced, inspect the clutch end-plate-to-top-disc clearance.

7. If any plate is worn, damaged, or discolored, replace the damaged plate with a new plate, and inspect the other waved-plates for a phase difference. If the clutch plate is replaced, inspect the clutch end-plate-to-top-disc clearance.

8. If the clutch end plate is worn, damaged, or discolored, inspect the clutch end-plate-to-top-disc clearance, then replace the clutch end plate.

BACK

Protected by AR



## Clutch Waved-plate Phase Difference Inspection

1. Place the clutch waved-plate (A) on a surface plate, and set a dial indicator (B) on the waved-plate.

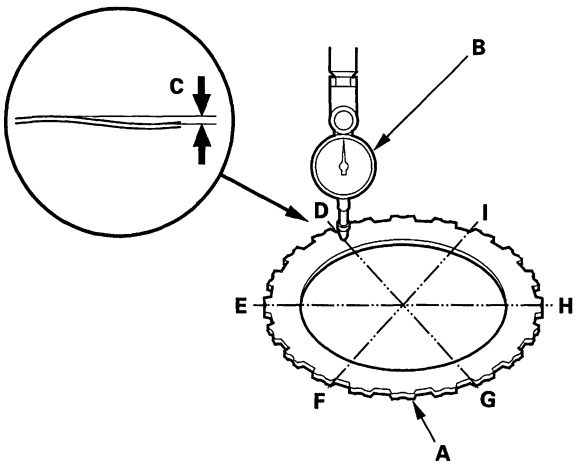


2. Find the bottom (D) of a phase difference of the waved-plate, zero the dial indicator and make a reference mark on the bottom of the waved-plate.

3. Rotate the clutch waved-plate of the 1st, 1st-hold, 2nd, 4th, and 5th clutches about 60-degrees while holding the waved-plate by its circumference, and rotate the 3rd clutch waved-plate about 72-degrees or 54-degrees while holding the waved-plate by its circumference. The dial indicator should be at the top (E) of a phase difference. Do not rotate the waved-plate while holding its surface, always rotate it by holding its circumference.

4. Read the dial indicator. The dial indicator reads the phase difference (C) of the waved-plate between the bottom and top.

   **Standard Phase Difference**

| | |
|---|---|
| **1st clutch:** | **0.17—0.3 mm (0.007—0.012 in.)** |
| **1st-hold clutch:** | **0.1—0.2 mm (0.004—0.008 in.)** |
| **2nd clutch:** | **0.11—0.21 mm (0.004—0.008 in.)** |
| **3rd clutch:** | **0.1—0.2 mm (0.004—0.008 in.)** |
| **4th clutch:** | **0.1—0.2 mm (0.004—0.008 in.)** |
| **5th clutch:** | **0.12—0.22 mm (0.005—0.009 in.)** |

5. Rotate the waved-plate of the 1st, 1st-hold, 2nd, 4th, and 5th clutches about 60-degrees, and the 3rd clutch waved-plate about 54-degrees or 72-degrees. The dial indicator should be at the bottom of a phase difference (F and H), and zero the dial indicator.

6. Measure the phase difference at the other two tops (G and I) of the waved-plate by following steps 3 thru 5.

7. If the two values of the three measurements are within the standard, the waved-plate is OK. If the two values of the three measurements are out of the standard, replace the waved-plate.



BACK

Protected by AR

## Clutch Clearance Inspection

**Special Tools Required**
Clutch compressor attachment 07ZAE-PRP0100

1. Inspect the clutch piston, discs, plates, and end plate for wear and damage (see page 14-371), and inspect the clutch waved-plate phase difference (see page 14-372), if necessary.

2. Install the 1st-hold clutch piston in the 1st clutch piston, and install 1st/1st-hold clutch piston (A) in the 1st/1st-hold clutch drum (B). Do not install the O-rings on the clutch pistons during inspection.

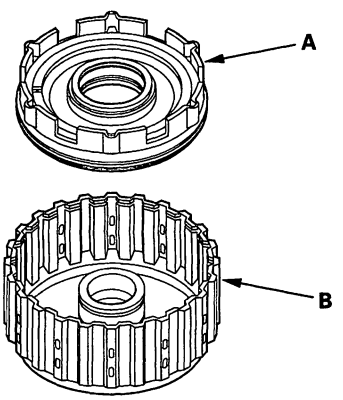


3. Install the 1st-hold clutch flat-plate (A), alternately install the clutch discs (B) (3) and the 1st-hold clutch waved-plates (C) (2), then install 1st-hold clutch plate B (D) with the flat side down in the direction shown.

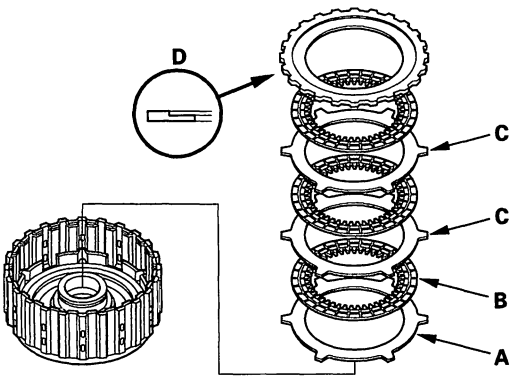


4. Measure the 1st-hold clutch plate B-to-top-disc clearance with a feeler gauge (A) while pressing the 1st-hold clutch plate B down. Take measurements in at least three places, and use the average as the actual clearance.

**1st-hold Clutch Plate B-to-Top-Disc Clearance**
**Service Limit: 0.6—1.0 mm (0.024—0.039 in.)**

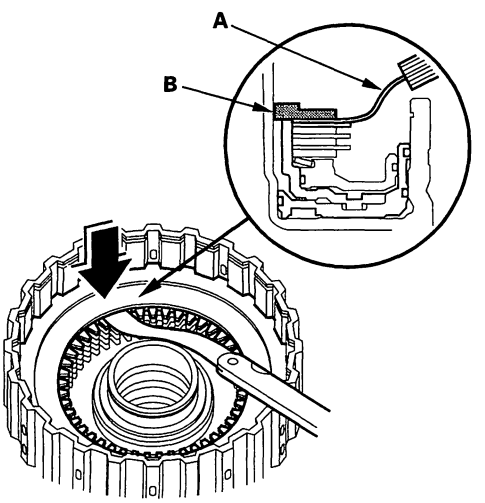


5. If the clearance is out of standard, replace the 1st-hold clutch plates and discs as a set, and recheck.

(cont'd)

Protected by AR



## Clutch Clearance Inspection (cont'd)

6. Install the disc spring (A) on 1st-hold clutch plate B in the direction shown. Starting with the 1st clutch waved-plate, alternately install the waved-plates (B) (5) and discs (C) (5) in the 1st clutch drum (D), then install the clutch-end-plate (E) with the flat side down.

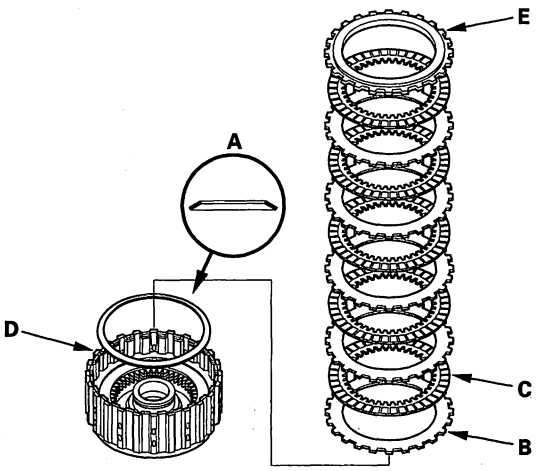


7. Install the clutch pistons in the 2nd, 3rd, 4th, and 5th clutch drums. Do not install the O-rings on the clutch pistons during inspection.

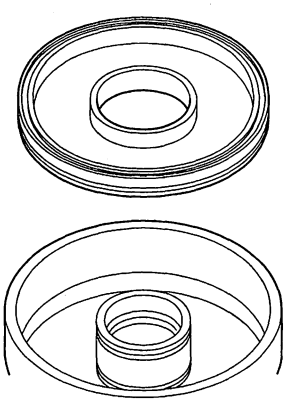

8. Starting with the 2nd clutch flat-plate, alternately install the flat-plates (A) (4) and discs (B) (4) in the 2nd clutch drum (C), and alternately install the waved-plates (D) (3) and discs (B) (3). Install the clutch-end-plate (E) with the flat side down on the top disc.

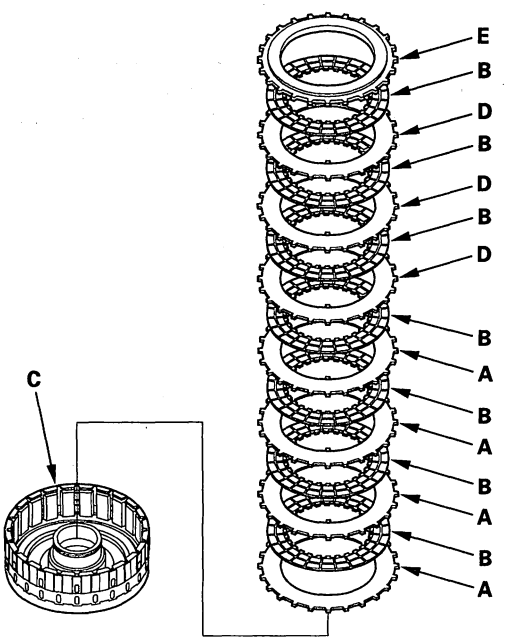


9. Install the disc spring (A) in the 3rd clutch drum (B) in the direction shown. Starting with the 3rd clutch flat-plate, alternately install the flat-plates (C) (3) and discs (D) (3), and alternately install the waved-plates (E) (2) and discs (D) (2). Install the clutch-end-plate (F) with the flat side down on the top disc.

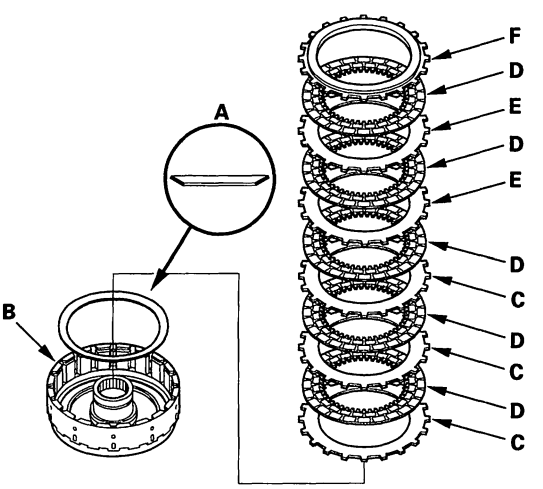




BACK

Protected by AR

10. Install the disc spring (A) in the 4th clutch drum (B) in the direction shown. Starting with the 4th clutch flat-plate, alternately install the flat-plates (C) (3) and discs (D) (3), and alternately install the waved-plates (E) (2) and discs (D) (2). Install the clutch-end-plate (F) with the flat side down on the top disc.

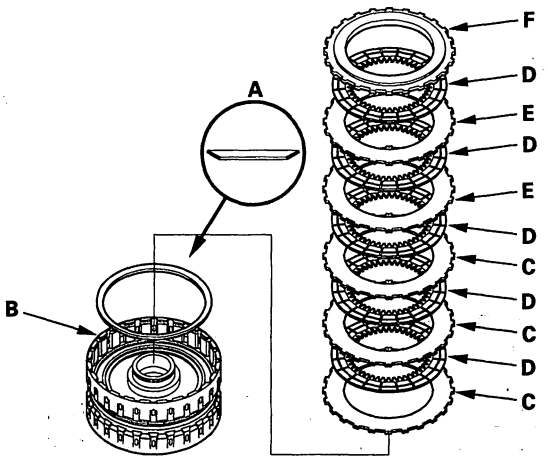


11. Install the disc spring (A) in the 5th clutch drum (B) in the direction shown. Starting with the 5th clutch flat-plate, alternately install the flat-plates (C) (3) and discs (D) (3), and alternately install the waved-plates (E) (2) and discs (D) (2). Install the clutch-end-plate (F) with the flat side down on the top disc.

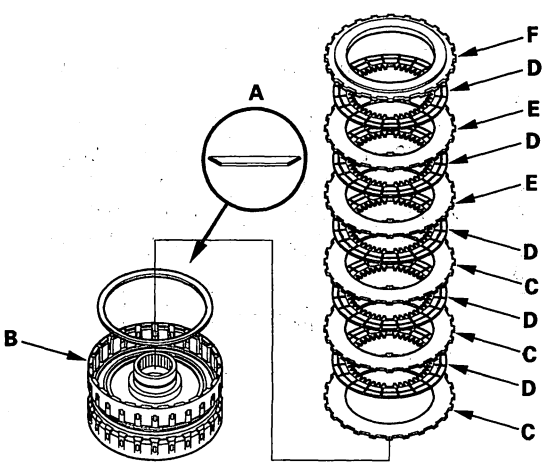


12. Install the snap ring with a screwdriver to secure the clutch-end-plate.

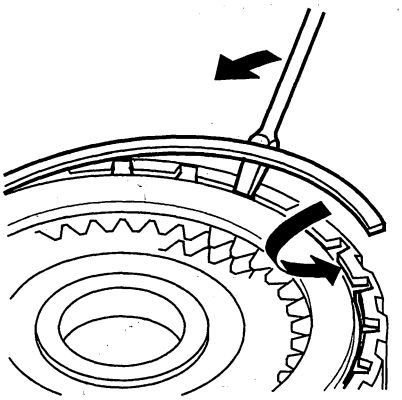

13. Set a dial indicator (A) on the clutch-end-plate (B).

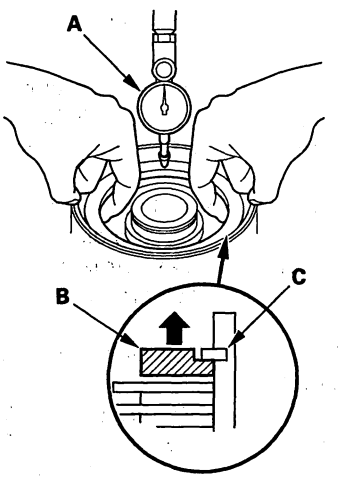


14. Zero the dial indicator with the clutch-end-plate lifted up to the snap ring (C).

(cont'd)

Protected by AR



## Clutch Clearance Inspection (cont'd)

15. Release the clutch-end-plate to lower the clutch-end-plate, then put the clutch compressor attachment on the end-plate (A).

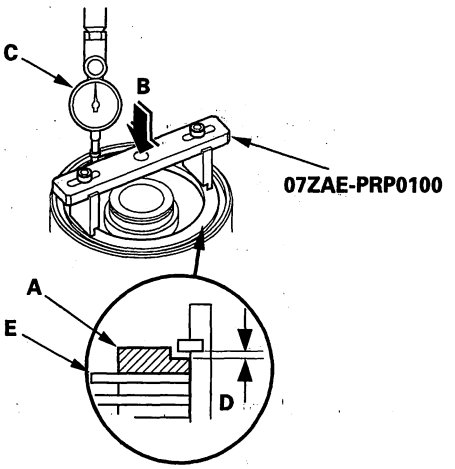


16. Press the clutch compressor attachment down with 150—160 N (15—16 kgf, 33—35 lbf) (B) using a force gauge, and read the dial indicator (C).

17. The dial indicator reads the clearance (D) between the clutch-end-plate and top disc (E). Take measurements in at least three places, and use the average as the actual clearance.

**Clutch End-Plate-to-Top-Disc Clearance Service Limit:**
**1st clutch: 1.15—1.35 mm (0.045—0.053 in.)**
**2nd clutch: 1.05—1.25 mm (0.041—0.049 in.)**
**3rd clutch: 0.8—1.0 mm (0.031—0.039 in.)**
**4th clutch: 0.75—0.95 mm (0.030—0.037 in.)**
**5th clutch: 0.75—0.95 mm (0.030—0.037 in.)**

18. If the clearance is out of the service limit, select a new clutch-end-plate from the following table.

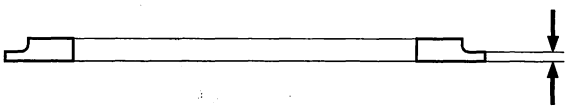

**1ST CLUTCH END PLATES**

| Plate No. | Part Number | Thickness |
|---|---|---|
| 1 | 22551-RDK-003 | 3.1 mm (0.122 in.) |
| 2 | 22552-RDK-003 | 3.2 mm (0.126 in.) |
| 3 | 22553-RDK-003 | 3.3 mm (0.130 in.) |
| 4 | 22554-RDK-003 | 3.4 mm (0.134 in.) |
| 5 | 22555-RDK-003 | 3.5 mm (0.138 in.) |
| 6 | 22556-RDK-003 | 3.6 mm (0.142 in.) |
| 7 | 22557-RDK-003 | 3.7 mm (0.146 in.) |
| 8 | 22558-RDK-003 | 3.8 mm (0.150 in.) |
| 9 | 22559-RDK-003 | 3.9 mm (0.154 in.) |

**2ND CLUTCH END PLATES**

| Plate No. | Part Number | Thickness |
|---|---|---|
| 1 | 22561-RDK-003 | 2.1 mm (0.083 in.) |
| 2 | 22562-RDK-003 | 2.2 mm (0.087 in.) |
| 3 | 22563-RDK-003 | 2.3 mm (0.091 in.) |
| 4 | 22564-RDK-003 | 2.4 mm (0.094 in.) |
| 5 | 22565-RDK-003 | 2.5 mm (0.098 in.) |
| 6 | 22566-RDK-003 | 2.6 mm (0.102 in.) |
| 7 | 22567-RDK-003 | 2.7 mm (0.106 in.) |
| 8 | 22568-RDK-003 | 2.8 mm (0.110 in.) |
| 9 | 22569-RDK-003 | 2.9 mm (0.114 in.) |



BACK

Protected by AR

**3RD CLUTCH END PLATES**

| Plate No. | Part Number | Thickness |
|---|---|---|
| 1 | 22591-RJB-E01 | 2.1 mm (0.083 in.) |
| 2 | 22592-RJB-E01 | 2.2 mm (0.087 in.) |
| 3 | 22593-RJB-E01 | 2.3 mm (0.091 in.) |
| 4 | 22594-RJB-E01 | 2.4 mm (0.094 in.) |
| 5 | 22595-RJB-E01 | 2.5 mm (0.098 in.) |
| 6 | 22596-RJB-E01 | 2.6 mm (0.102 in.) |
| 7 | 22597-RJB-E01 | 2.7 mm (0.106 in.) |
| 8 | 22598-RJB-E01 | 2.8 mm (0.110 in.) |
| 9 | 22599-RJB-E01 | 2.9 mm (0.114 in.) |

**4TH CLUTCH END PLATES**

| Plate No. | Part Number | Thickness |
|---|---|---|
| 1 | 22571-RJB-E01 | 2.1 mm (0.083 in.) |
| 2 | 22572-RJB-E01 | 2.2 mm (0.087 in.) |
| 3 | 22573-RJB-E01 | 2.3 mm (0.091 in.) |
| 4 | 22574-RJB-E01 | 2.4 mm (0.094 in.) |
| 5 | 22575-RJB-E01 | 2.5 mm (0.098 in.) |
| 6 | 22576-RJB-E01 | 2.6 mm (0.102 in.) |
| 7 | 22577-RJB-E01 | 2.7 mm (0.106 in.) |
| 8 | 22578-RJB-E01 | 2.8 mm (0.110 in.) |
| 9 | 22579-RJB-E01 | 2.9 mm (0.114 in.) |

**5TH CLUTCH END PLATES**

| Plate No. | Part Number | Thickness |
|---|---|---|
| 1 | 22571-RJB-003 | 2.1 mm (0.083 in.) |
| 2 | 22572-RJB-003 | 2.2 mm (0.087 in.) |
| 3 | 22573-RJB-003 | 2.3 mm (0.091 in.) |
| 4 | 22574-RJB-003 | 2.4 mm (0.094 in.) |
| 5 | 22575-RJB-003 | 2.5 mm (0.098 in.) |
| 6 | 22576-RJB-003 | 2.6 mm (0.102 in.) |
| 7 | 22577-RJB-003 | 2.7 mm (0.106 in.) |
| 8 | 22578-RJB-003 | 2.8 mm (0.110 in.) |
| 9 | 22579-RJB-003 | 2.9 mm (0.114 in.) |

19. Install the new clutch-end-plate, and recheck the clearance. If the thickest clutch-end-plate is installed, but the clearance is still over the service limit, replace the clutch discs and plates.

Protected by AR



## Clutch Reassembly

**Special Tools Required**
- Clutch spring compressor attachment 07LAE-PX40100 or 07HAE-PL50101
- Clutch spring compressor bolt assembly 07GAE-PG40200 or 07GAE-PG4020A

1. Soak the clutch discs thoroughly in ATF for a minimum of 30 minutes.

2. Install the new O-rings (A) on the 1st-hold clutch piston (B), and install the 1st-hold clutch piston in the 1st clutch piston (C).

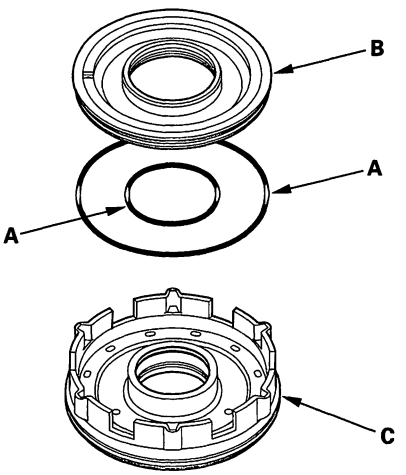


3. Install the new O-rings (A) on the 1st clutch piston (B), and install the 1st/1st-hold clutch piston in the 1st/1st-hold clutch drum (C) while applying pressure and rotating to ensure proper seating. Do not pinch the O-ring.

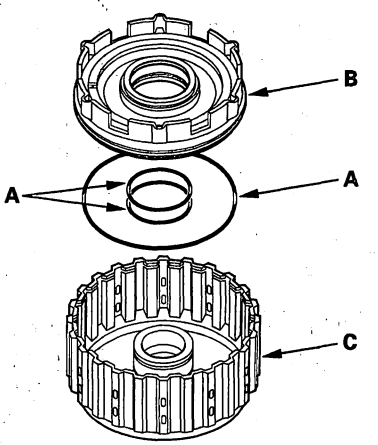


4. Install the O-rings (A) on the 2nd, 3rd, 4th and 5th clutch piston (B).

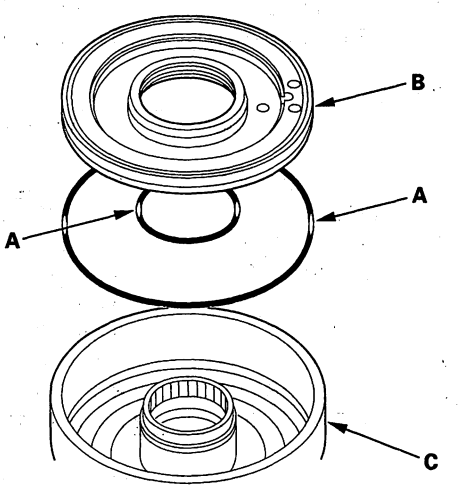


5. Install the clutch pistons in the clutch drums (C) while applying pressure and rotating to ensure proper seating. Do not pinch the O-ring.



BACK

Protected by AR

6. Install the return spring (A) and spring retainer (B), and position the snap ring (C) on the spring retainer.

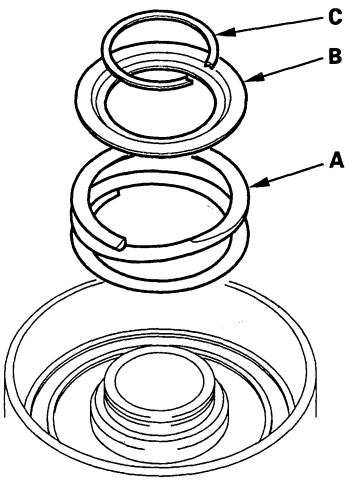


7. Install the clutch spring compressor attachments and the clutch spring compressor bolt assembly.

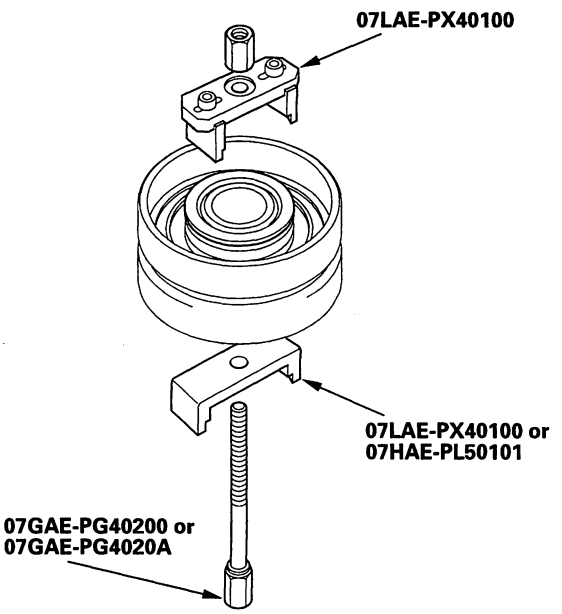


8. Be sure the clutch spring compressor attachment (A) is adjusted to have full contact with the spring retainer (B) on the 1st, 2nd, and 4th clutches.

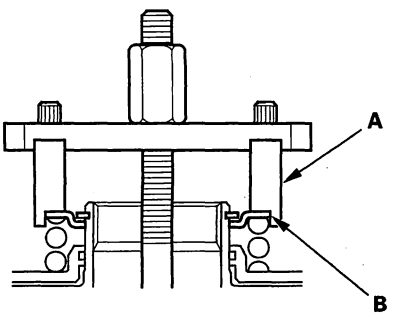


9. If either end of the clutch spring compressor attachment is set over an area of the spring retainer that is unsupported by the return spring, the retainer may be damaged.

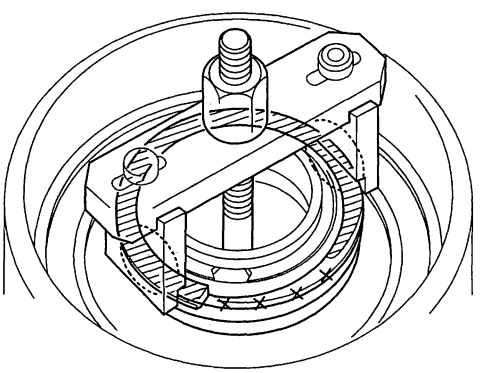

(cont'd)

Protected by AR



## Clutch Reassembly (cont'd)

10. Set the clutch spring compressor attachment (A) on the spring retainer (B) of the 3rd and 5th clutches so the clutch spring compressor attachment works on the clutch return spring (C).

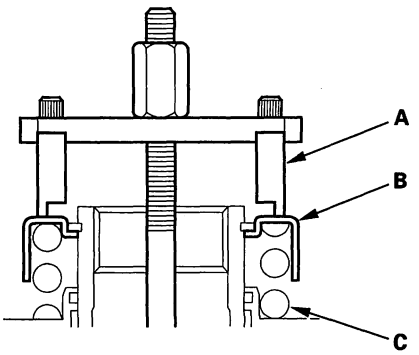


11. If either end of the clutch spring compressor attachment is not set over the clutch return spring end (A), the retainer may be damaged.

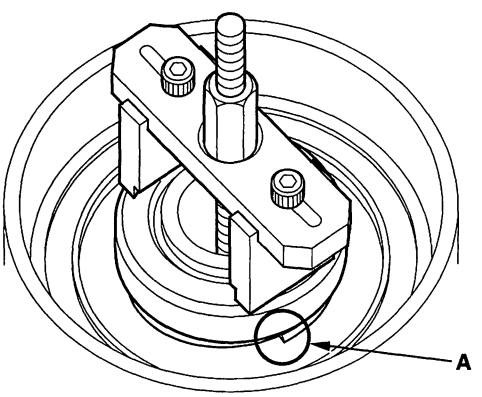


12. Compress the return spring until the snap ring can be installed.

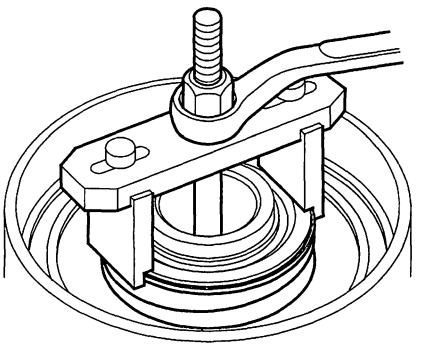

13. Install the snap ring with the snap ring pliers.

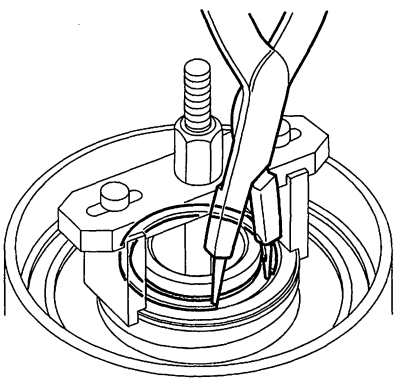

14. Remove the clutch spring compressor attachments and the clutch spring compressor bolt assembly.



BACK

Protected by AR

15. Install the 1st-hold clutch flat-plate (A), alternately install the clutch discs (B) (3) and the 1st-hold clutch waved-plates (C) (2) in the 1st/1st-hold clutch drum (D), then install 1st-hold clutch plate B (E) with the flat side down in the direction shown.

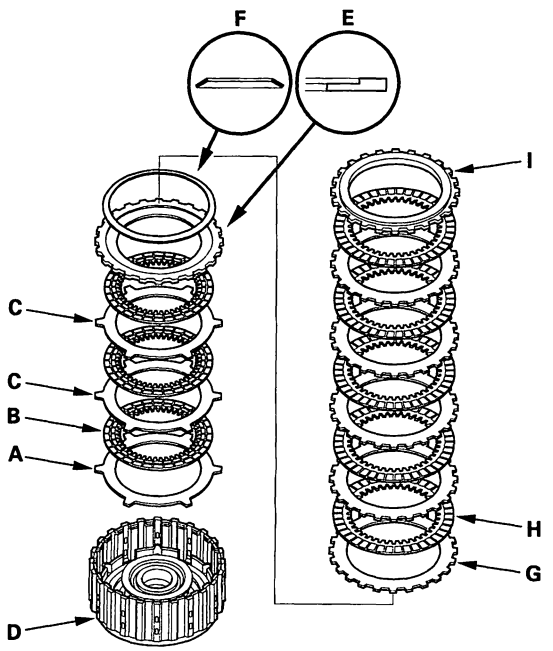


16. Install the disc spring (F) on 1st-hold clutch plate B in the direction shown. Starting with the 1st clutch waved-plate, alternately install the waved-plates (G) (5) and discs (H) (5), then install the clutch-end-plate (I) with the flat side down on the top disc.

17. Starting with the 2nd clutch flat-plate, alternately install the flat-plates (A) (4) and discs (B) (4) in the 2nd clutch drum (C), and alternately install the waved-plates (D) (3) and discs (B) (3). Install the clutch-end-plate (E) with the flat side down on the top disc.

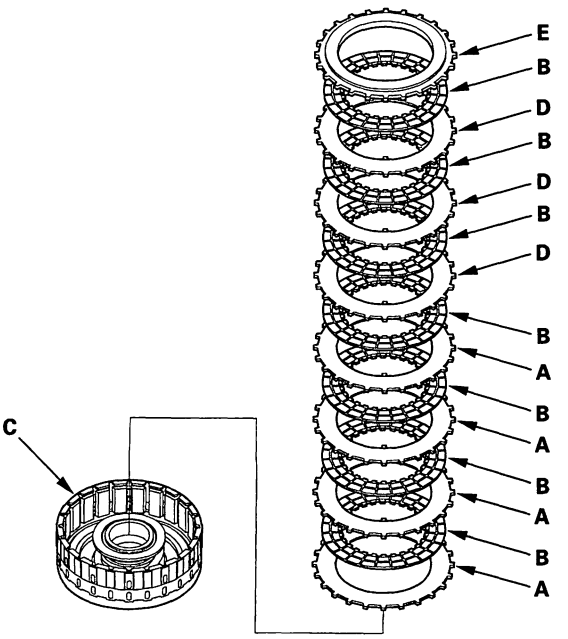


18. Install the disc spring (A) in the 3rd clutch drum (B) in the direction shown. Starting with the 3rd clutch flat-plate, alternately install the flat-plates (C) (3) and discs (D) (3), and alternately install the waved-plates (E) (2) and discs (D) (2). Install the clutch-end-plate (F) with the flat side down on the top disc.

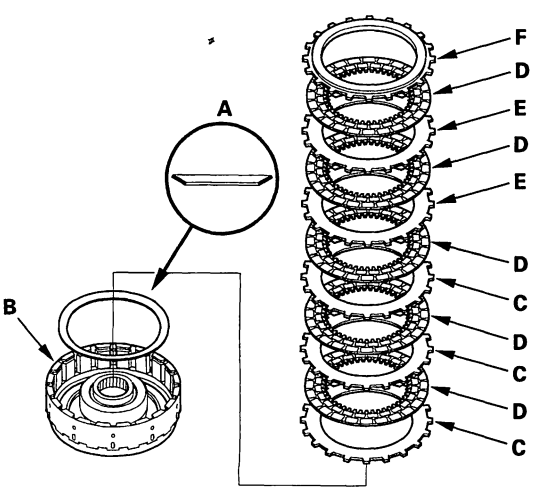


(cont'd)

Protected by AR



## Clutch Reassembly (cont'd)

19. Install the disc spring (A) in the 4th clutch drum (B) in the direction shown. Starting with the 4th clutch flat-plate, alternately install the flat-plates (C) (3) and discs (D) (3), and alternately install the waved-plates (E) (2) and discs (D) (2). Install the clutch-end-plate (F) with the flat side down on the top disc.

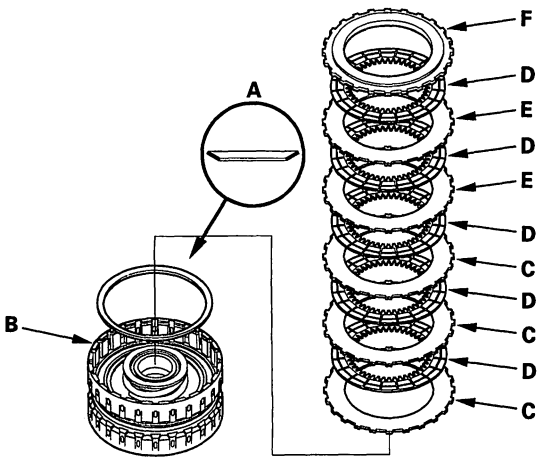


20. Install the disc spring (A) in the 5th clutch drum (B) in the direction shown. Starting with the 5th clutch flat-plate, alternately install the flat-plates (C) (3) and discs (D) (3), and alternately install the waved-plates (E) (2) and discs (D) (2). Install the clutch-end-plate (F) with the flat side down on the top disc.

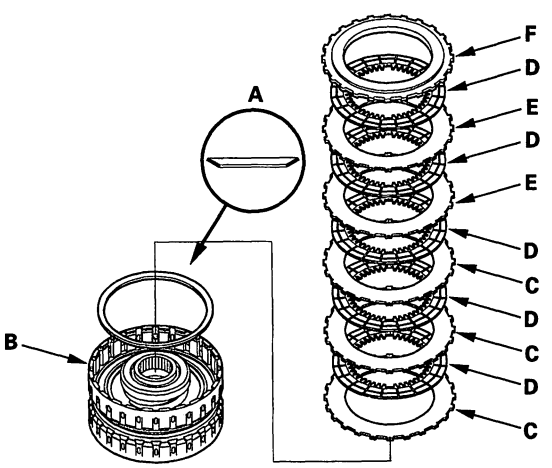


21. Install the snap ring with a screwdriver to secure the clutch-end-plate.

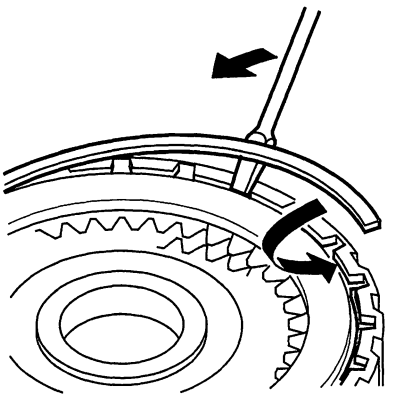



BACK

Protected by AR



## Transmission Reassembly

### Exploded View

Bolt Tightening Torque
6 x 1.0 mm: 12 N·m (1.2 kgf·m, 8.7 lbf·ft)
8 x 1.25 mm: 18 N·m (1.8 kgf·m, 13 lbf·ft)

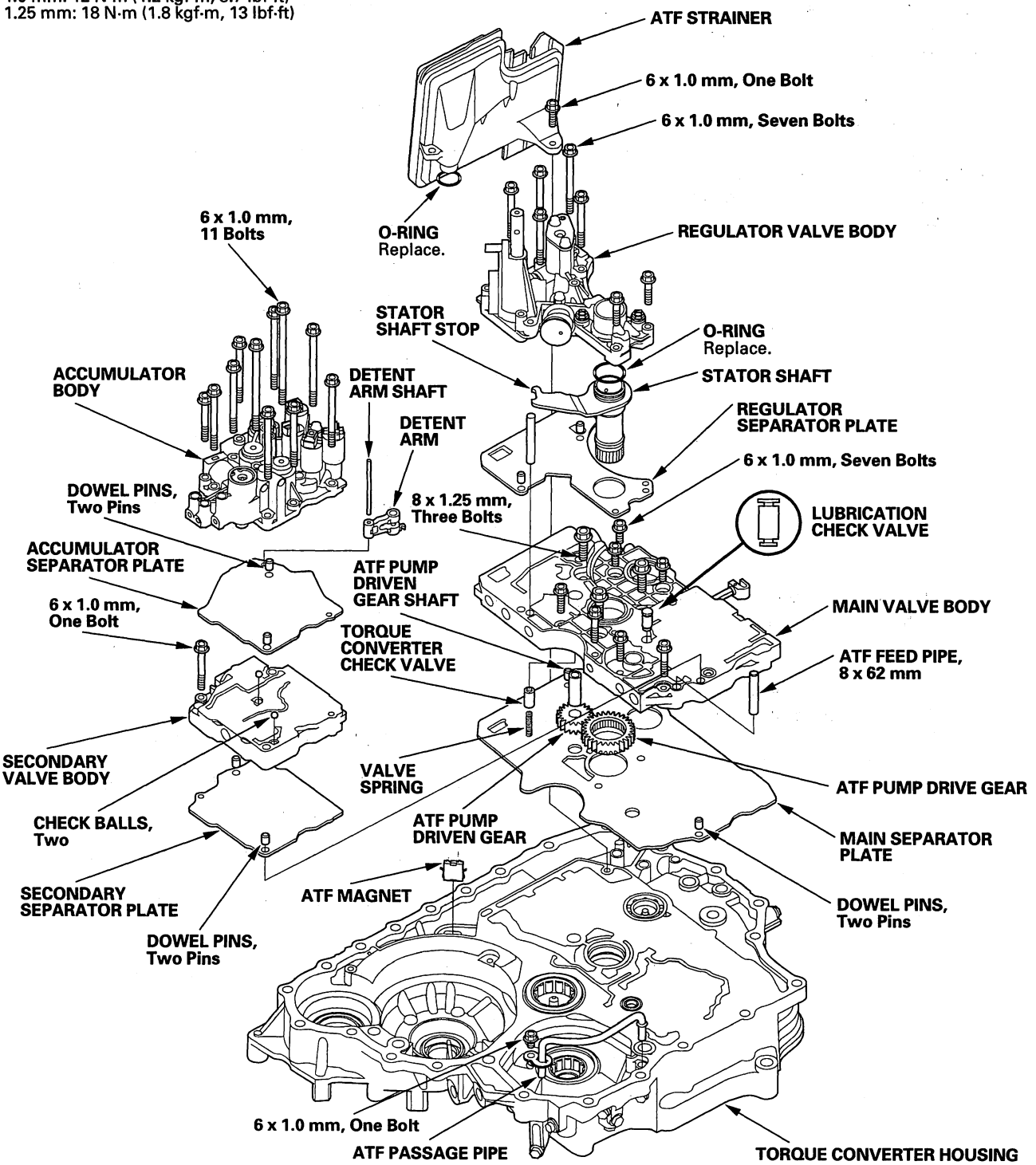


(cont'd)

BACK

Protected by AR



## Transmission Reassembly (cont'd)

**Special Tool Required**
Mainshaft holder 07GAB-PF50101

1. Make sure that the ATF magnet is cleaned and installed in the torque converter housing. Clean and install the ATF magnet, if necessary.

2. Install the main separator plate and the two dowel pins on the torque converter housing. Then install the ATF pump drive gear (A), driven gear (B), and ATF pump driven gear shaft (C). Install the ATF pump driven gear with its grooved and chamfered side facing down.

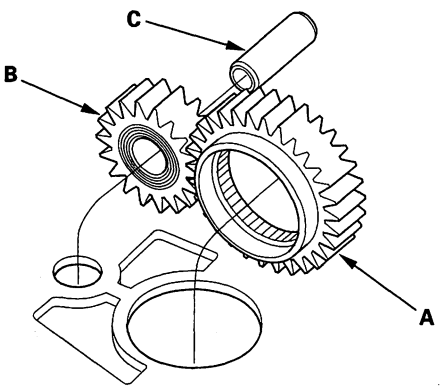


3. Install the torque converter check valve spring and valve in the torque converter housing.

4. Install the main valve body (seven 6 mm bolts and three 8 mm bolts). Make sure the ATF pump drive gear (A) rotates smoothly in the normal operating direction, and the ATF pump driven gear shaft (C) moves smoothly in the axial and normal operating direction.

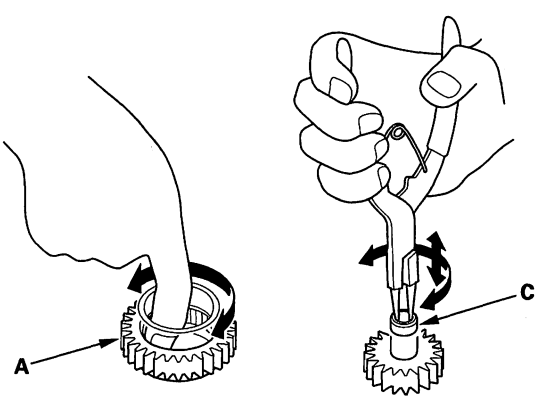


5. If the ATF pump drive gear and ATF pump driven gear shaft do not move smoothly, loosen the main valve body bolts. Realign the ATF pump driven gear shaft, and retighten the bolts to the specified torques, then recheck. Failure to align the ATF pump driven gear shaft correctly will result in a seized ATF pump drive gear or ATF pump driven gear shaft.

6. Install the lubrication check valve, cooler check valve and cooler check valve spring in the main valve body. Install the lubrication check valve in the direction shown in the exploded view.

7. Install the secondary separator plate and the two dowel pins on the main valve body, and install the secondary valve body (one bolt).

8. Install the two check balls in the secondary valve body.

9. Install the accumulator separator plate and the two dowel pins on the secondary valve body.

10. Position the detent arm on the accumulator separator plate, and install the detent arm shaft into the detent arm through the separator plates to the main valve body.

11. Install the 8 x 62 mm ATF feed pipes in the main valve body, and install the accumulator body (11 bolts).

12. Install the regulator separator plate and the two dowel pins on the main valve body.

13. Install the stator shaft with the new O-ring, and install the regulator valve body (eight bolts).

14. Install the stator shaft stop in the main valve body.

15. Install the ATF strainer with the new O-ring (two bolts).

16. Install the ATF passage pipe (one bolt) in the torque converter housing.



BACK

Protected by AR

17. Install the intermediary shaft (A) into the main valve body, and install the 26.5 mm washer (B) on the top of the intermediary shaft.

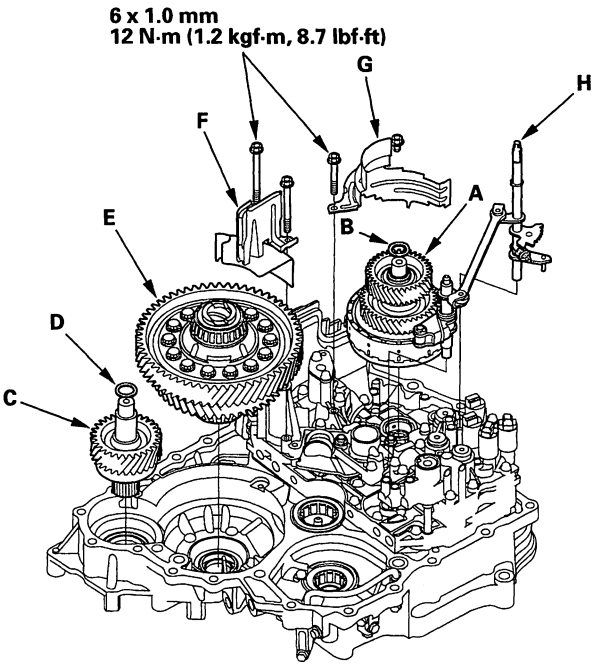


18. Install the transfer output shaft (C) in the torque converter housing, and install the thrust shim (D) on the top of the transfer output shaft.

19. Install the differential assembly (E) in the torque converter housing.

20. Install the baffle plate (F), and make sure the differential is clear of the baffle plate.

21. Install the baffle plate (G), and make sure the intermediary shaft is clear of the baffle plate.

22. Install the selector control shaft and the park lever link (H).

23. Assemble the mainshaft, countershaft, and secondary shaft.

24. Install the needle bearing (A) on the secondary shaft roller bearing in the torque converter housing.

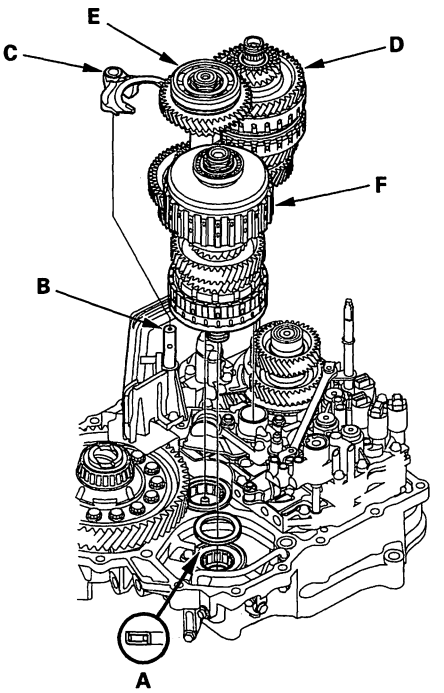


25. Turn the shift fork shaft (B) so the large chamfered hole is facing the fork bolt hole of the shift fork.

26. Engage the shift fork (C) with the reverse selector on the countershaft, and join the mainshaft (D), countershaft (E), and secondary shaft (F), then install them in the torque converter housing and shift fork on the shift fork shaft.

(cont'd)

Protected by AR



## Transmission Reassembly (cont'd)

27. Secure the shift fork (A) to the shift fork shaft with the lock bolt and the new lock washer (B), then bend the lock tab of the lock washer against the bolt head.

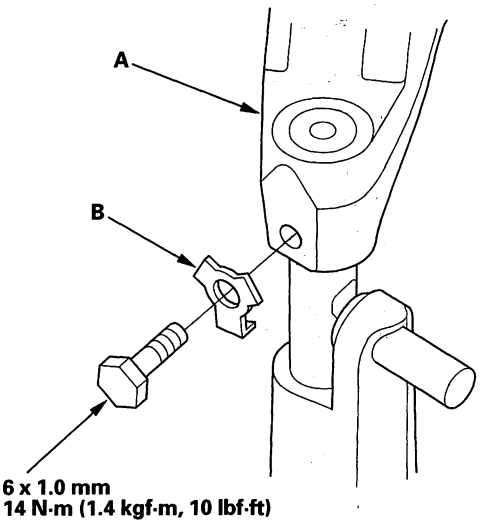


28. Install the park pawl shaft (A), pawl spring (B), park pawl (C), and park pawl stop (D).

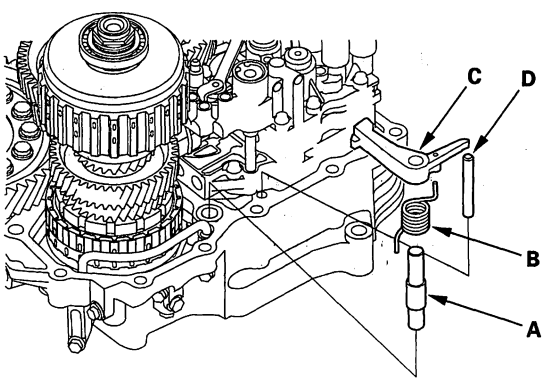


29. Align the control lever pin with the manual valve guide.

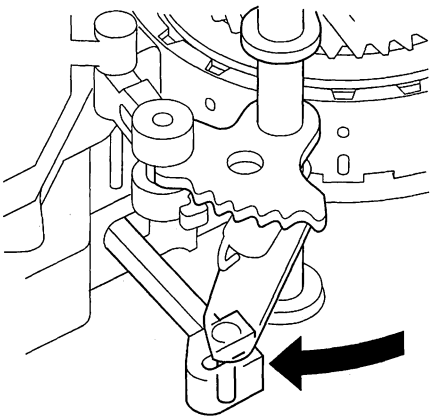

30. Hook the detent arm spring to the detent arm.

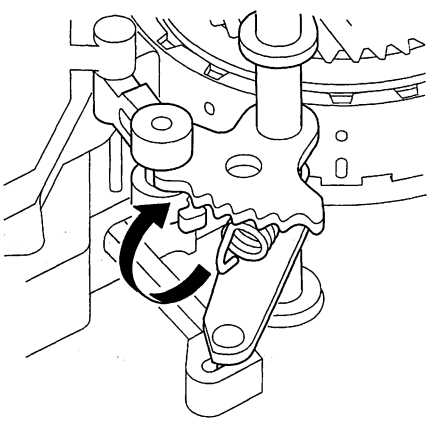



BACK

Protected by AR

31. Install the 8 x 85 mm ATF feed pipe (A), the 8 x 151.5 mm pipes (B), and the 8 x 40 mm pipe (C) in the accumulator body.

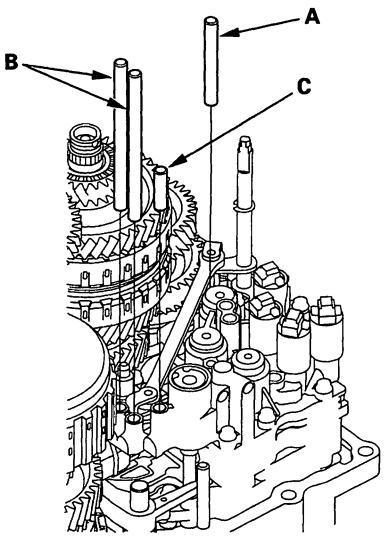


32. Install the 8 x 57.5 mm ATF feed pipe (A) and the 10 x 123 mm pipe (B) in the torque converter housing.

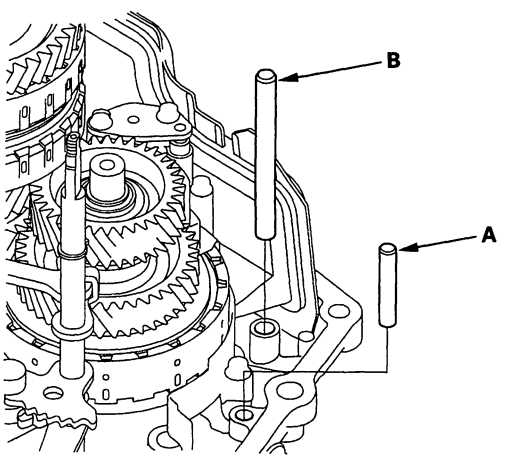


33. Install the two dowel pins (A) and the new gasket (B) on the torque converter housing (C).

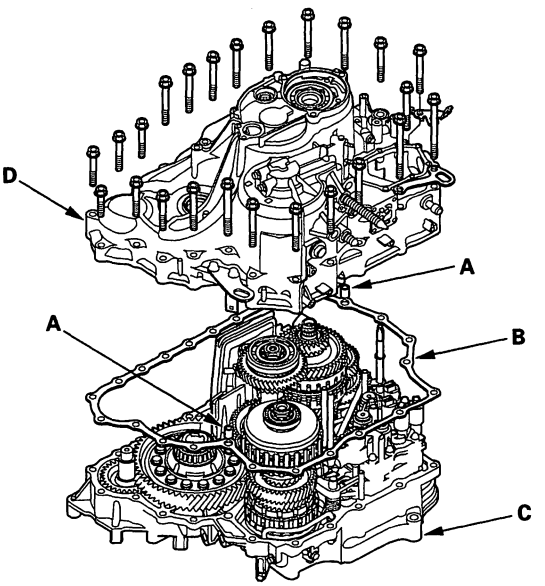


34. Place the transmission housing (D) on the torque converter housing.

35. Wrap a screwdriver tip with tape to prevent damage to the reverse idler gear teeth. Engage the reverse idler gear with reverse gears by rotating the idler gear using the screwdriver.

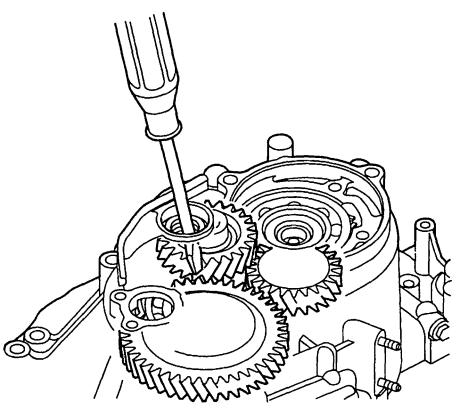

(cont'd)

Protected by AR



## Transmission Reassembly (cont'd)

36. While expanding the snap ring of the countershaft bearing using snap ring pliers, install the transmission housing onto the bearing part-way. Then release the snap ring pliers, and push down on the housing until it bottoms and the snap ring snaps into place in the transmission housing snap ring groove.

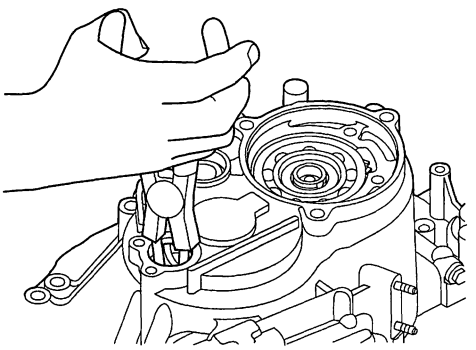

37. Install the transmission housing mounting bolts (21 bolts) and the bolt (A) along with the transmission hanger (B) and the transmission ground terminal bracket (C), and tighten the bolts in two or more steps in a criss-cross pattern to 44 N·m (4.5 kgf·m, 33 lbf·ft).

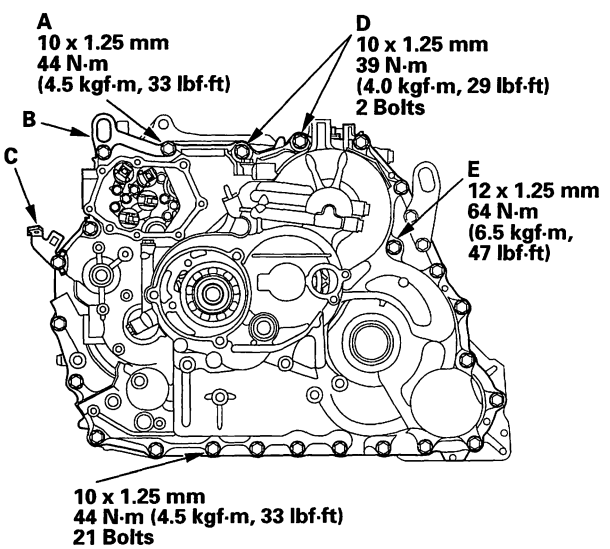


38. Install and tighten the two mounting bolts (D) to 39 N·m (4.0 kgf·m, 29 lbf·ft). Keep the mounting bolts free of grease or oil.

39. Install and tighten the special bolt (E) to 64 N·m (6.5 kgf·m, 47 lbf·ft).

40. Install the mainshaft holder onto the mainshaft.

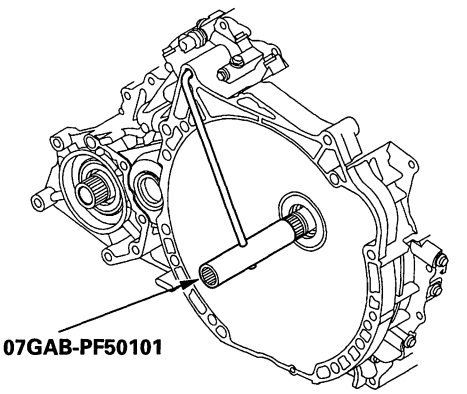


41. Install the new lock washer (A) with the marked side (B) up over the mainshaft (C), and apply ATF to surfaces of the lock washer and old locknut (D).

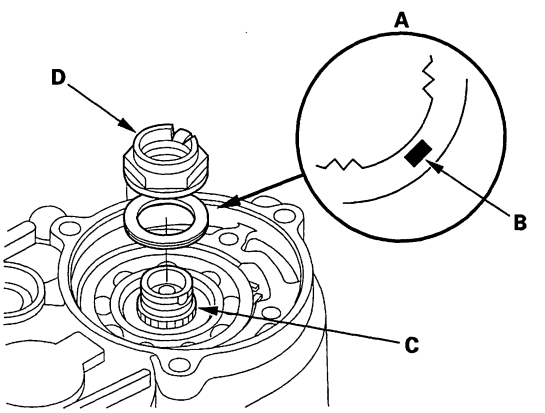


42. Install the old locknut, and tighten it to seat the lock washer to 178 N·m (18.2 kgf·m, 132 lbf·ft), then remove the old locknut.



BACK

Protected by AR

43. Install the new locknut and tighten it to 176 N·m (18.2 kgf·m, 132 lbf·ft), then stake the locknut to a depth (A) of 0.7—1.3 mm (0.03—0.05 in.) using a 3.5 mm punch (B).

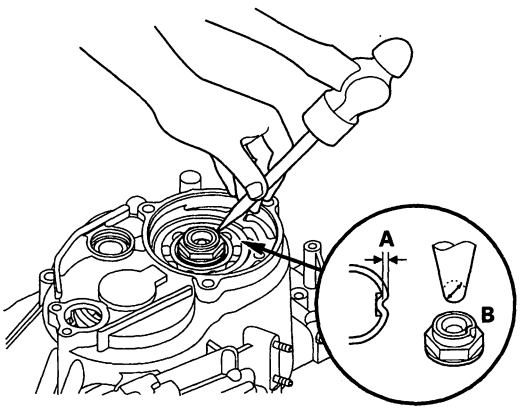


44. Install the end cover (A), dowel pin (B), and new O-ring (C).

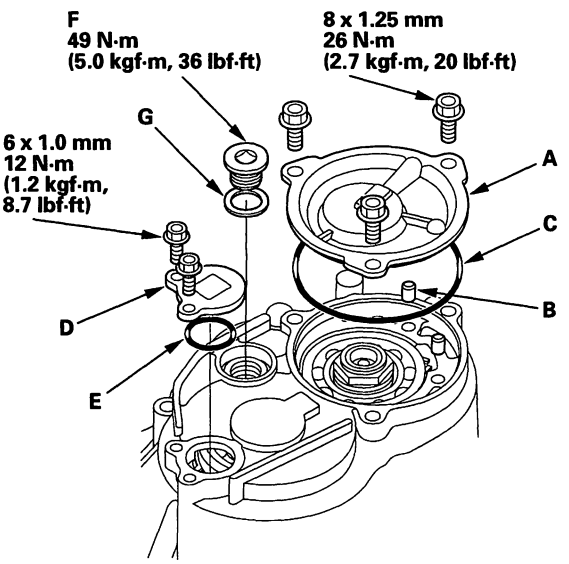


45. Install the snap ring cap (D) with the new O-ring (E).

46. Apply thread lock sealant to the threads of the sealing plug (F), and install the sealing plug and the new sealing washer (G).

47. Install the new O-ring (E) on the solenoid harness connector (F).

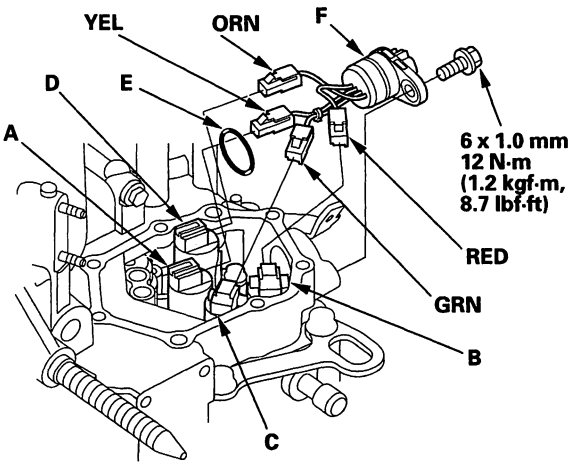


48. Route the solenoid harness through the transmission housing, and install the solenoid harness connector.

49. Connect the GRN harness connector to shift solenoid valve C.

50. Connect the YEL harness connector to shift solenoid valve A.

51. Connect the RED harness connector to shift solenoid valve B.

52. Connect the ORN harness connector to shift solenoid valve D.

53. Secure the solenoid harness connector with the bolt on the transmission housing.

(cont'd)

Protected by AR



## Transmission Reassembly (cont'd)

54. Install the solenoid valve cover (A) with the two dowel pins (B) and the new gasket (C), and secure it with the seven bolts.

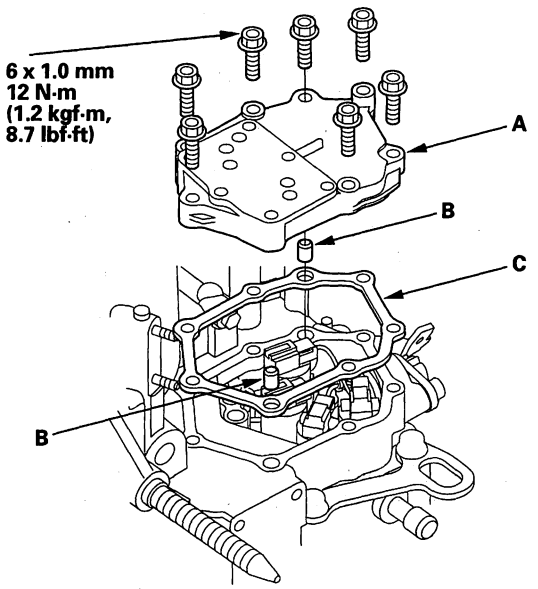


55. Place the new gasket (A) on the solenoid valve cover, then install the 8 x 105.8 mm ATF feed pipes (B) and the 8 x 58.3 mm pipes (C) with their filter side into the transmission housing.

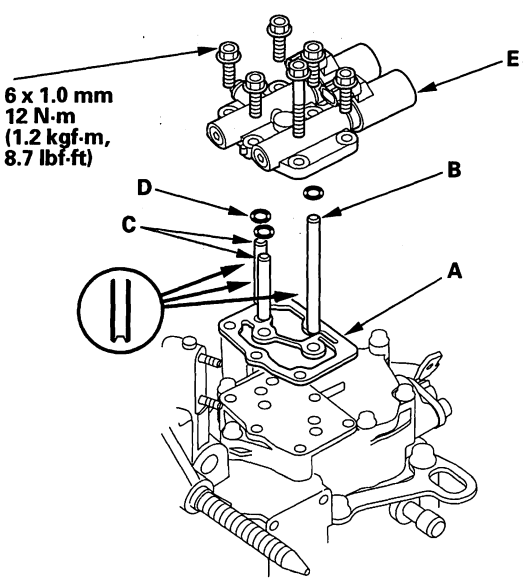


56. Install the new O-rings (D) over the ATF feed pipes, and install A/T clutch pressure control solenoid valves A and B (E).

57. Install the 8 x 53 mm ATF joint pipe (A) with the filter side into its mounting hole (B).

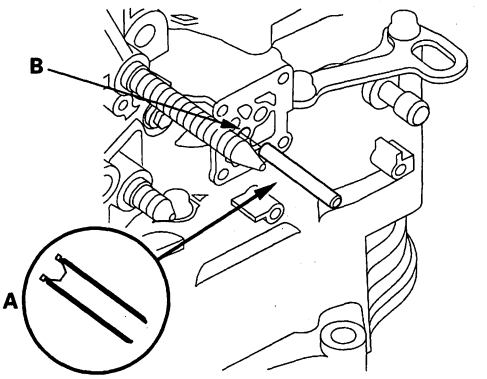


58. Check the height (A) of the 8 x 53 mm ATF joint pipe (B) between the top (C) of the pipe and the solenoid valve body mounting surface (D). The height is about 7 mm (0.3 in.). If the height is over 7 mm (0.3 in.), install the pipe securely until it stops the accumulator body.

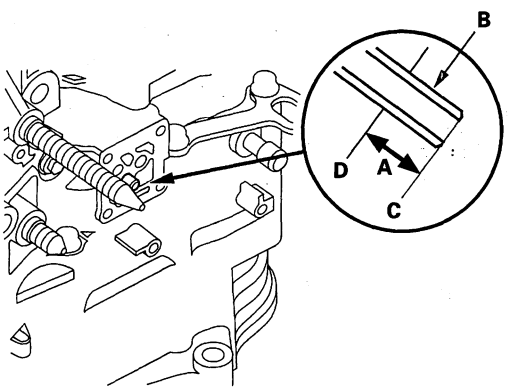




BACK

Protected by AR

59. Install the new gasket (A) on the transmission housing. Install the 8 x 34.5 mm ATF pipe (B) with the filter end in the transmission housing, and install the 8 x 25.5 mm ATF pipe (D).

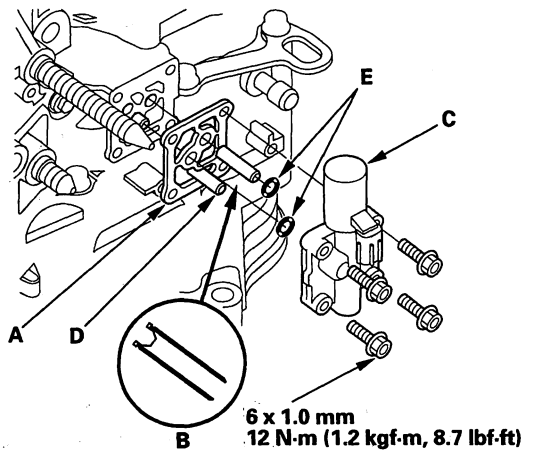


60. Install new O-rings (E) over the ATF joint pipes.

61. Install A/T clutch pressure control solenoid valve C.

62. Set the control shaft to the N position by turning the selector control shaft with a 6.0 mm wrench.

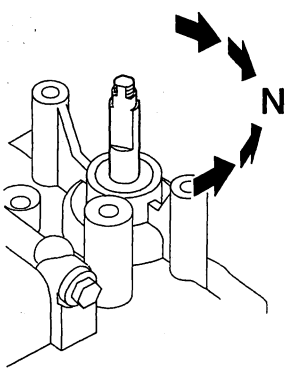


63. Set the transmission range switch (A) to the N position. The transmission range switch clicks in the N position, and the selector control shaft hole (B) aligns with the N positioning line (C).

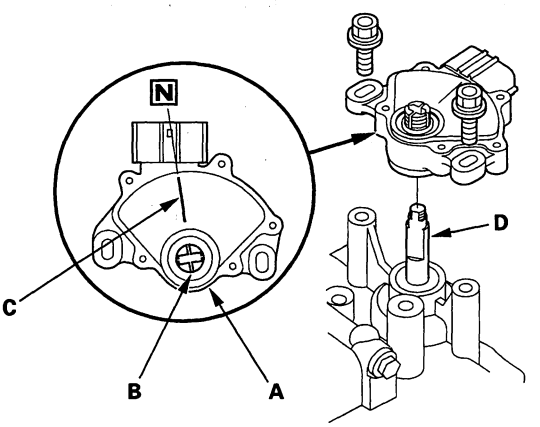


64. Install the transmission range switch gently over the selector control shaft (D), and install the bolts loosely.

65. Install the new lock washer (A) over the selector control shaft (B) by aligning the projection (C) of the lock washer with the N positioning line (D) on the transmission range switch (E), and install the locknut (F).

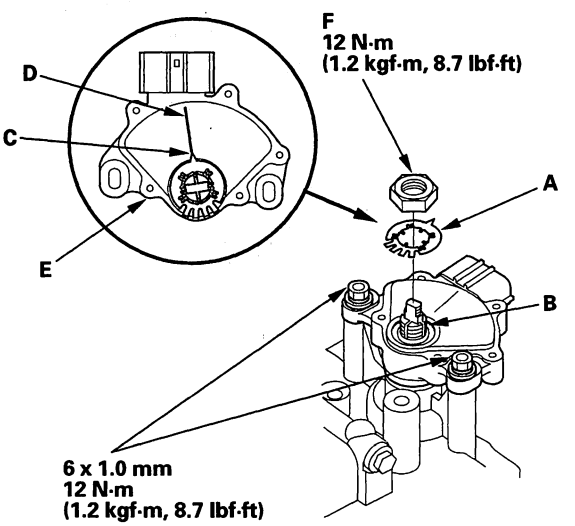


(cont'd)

Protected by AR



## Transmission Reassembly (cont'd)

66. Push the locknut against the transmission housing to seat the range switch into the selector control shaft, and tighten the locknut to 12 N·m (1.2 kgf·m, 8.7 lbf·ft) while holding the selector control shaft with a 6 mm wrench, then bend the lock tabs against the locknut.

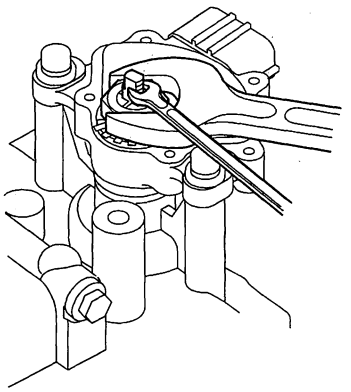

67. Tighten the range switch mounting bolts to 12 N·m (1.2 kgf·m, 8.7 lbf·ft).

68. Install the control lever (A), spring washer (B), lock washer (C), and locknut (D) on the selector control shaft (E).

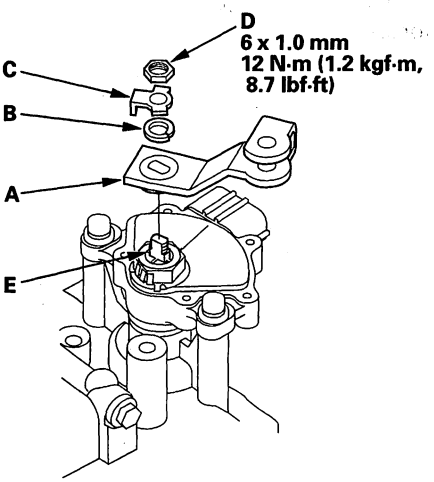


69. Install the new O-ring (A) on the input shaft (mainshaft) speed sensor (B), and install the input shaft (mainshaft) speed sensor.

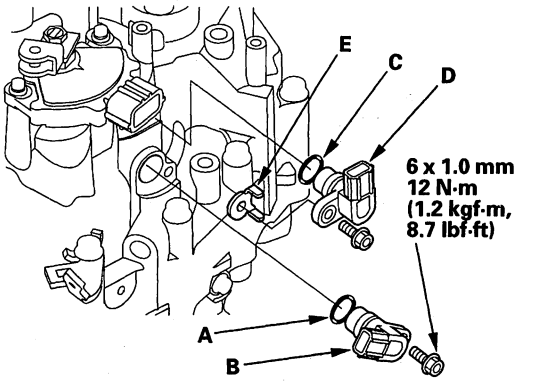


70. Install the new O-ring (C) on the output shaft (countershaft) speed sensor (D), and install the output shaft (countershaft) speed sensor and the sensor washer (E).

71. Install the 4th clutch transmission fluid pressure switch (A) with the new sealing washer (B). Tighten the switch with the metal part.

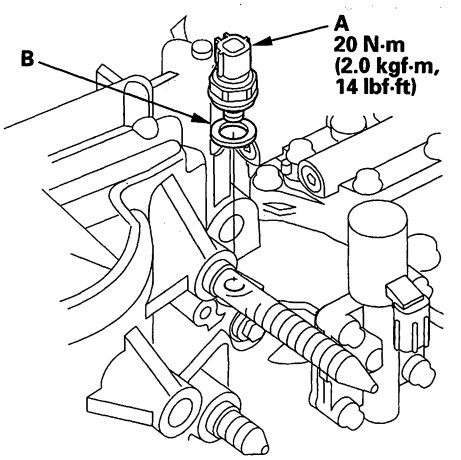




BACK

Protected by AR

72. Install the 3rd clutch transmission fluid pressure switch (A) with the new sealing washer (B). Tighten the switch with the metal part.

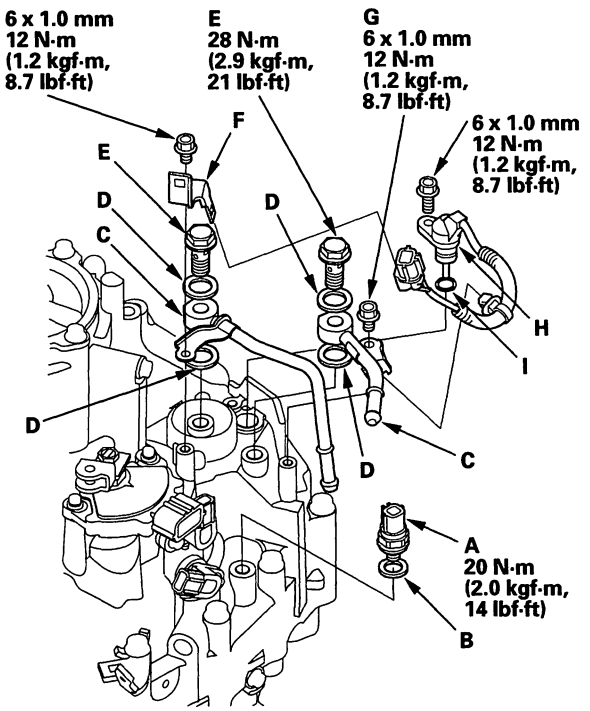


73. Install the ATF cooler lines (C) with the new sealing washers (D) and the line bolts (E).

74. Install the connector bracket (F), and secure the ATF lines with the 6.0 mm bolt (G) on the transmission housing. Tighten the bolts to 12 N·m (1.2 kgf·m, 8.7 lbf·ft).

75. Install the ATF temperature sensor (H) with the new O-ring (I). Install the connector on the connector bracket and the harness clamp on the bracket.

76. Install the 2nd clutch transmission fluid pressure switch (A) with the new sealing washer (B). Tighten the switch by the metal part.

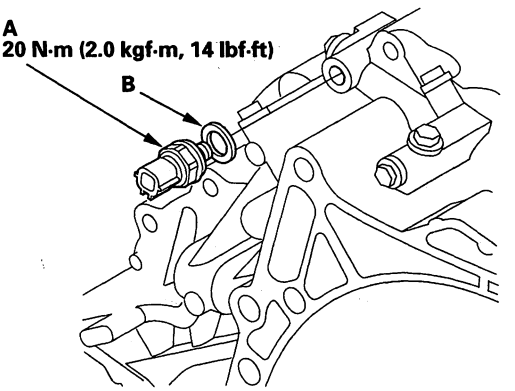


77. Install the ATF dipstick tube (A) with the new O-ring (B).

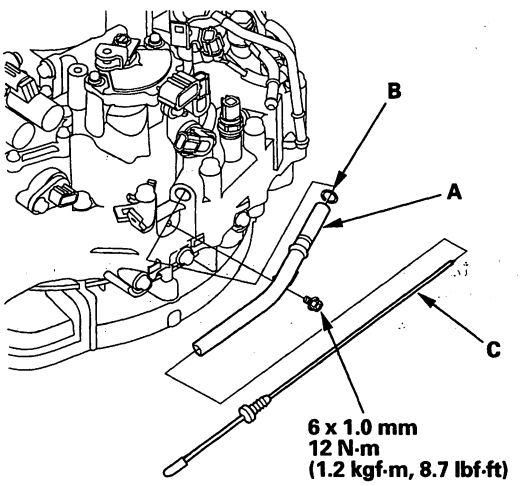


78. Install the ATF dipstick (C) in its tube.

(cont'd)

Protected by AR



## Transmission Reassembly (cont'd)

79. Connect the transmission range switch harness connector (A), and install the harness clamp (B) on the clamp bracket (C).

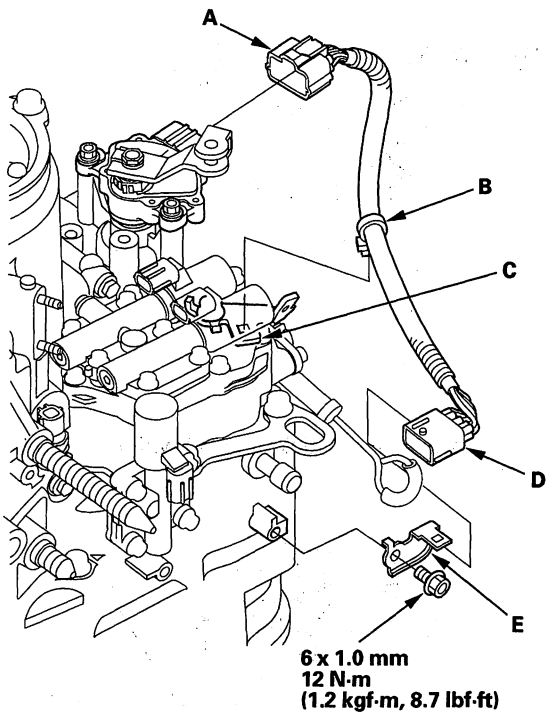


80. Install the harness connector (D) on the connector bracket (E). If the connector bracket was removed, install the connector bracket, then install the connector on the bracket.



BACK

Protected by AR



## Component Location Index

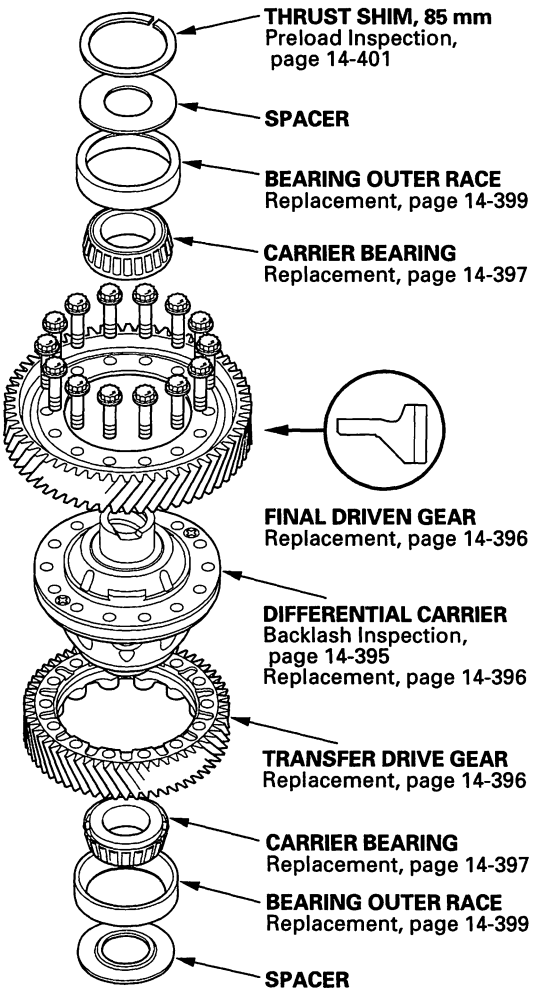


## Backlash Inspection

1. Remove the final driven gear and transfer drive gear from the differential carrier.

2. Install both axles into the differential assembly (A), and place the axles on V-blocks (B).

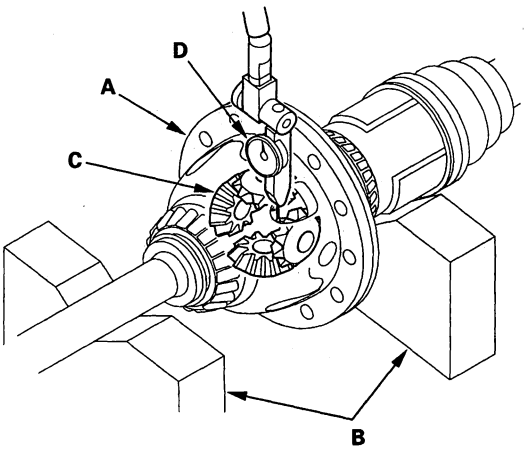


3. Measure the backlash of the pinion gears (C) with a dial indicator (D).

   **Standard (New): 0.05—0.15 mm (0.002—0.006 in.)**

4. If the backlash is out of standard, replace the differential carrier.

5. Install the final driven gear and transfer drive gear on the differential carrier (see page 14-396).

Protected by AR



## Differential Carrier, Final Driven Gear, and Transfer Drive Gear Replacement

NOTE: Inspect and adjust the bearing preload whenever the carrier is replaced.

1. Remove the final driven gear (A) and transfer drive gear (B) from the differential carrier (C).

   NOTE: The final driven gear bolts have left-hand threads.

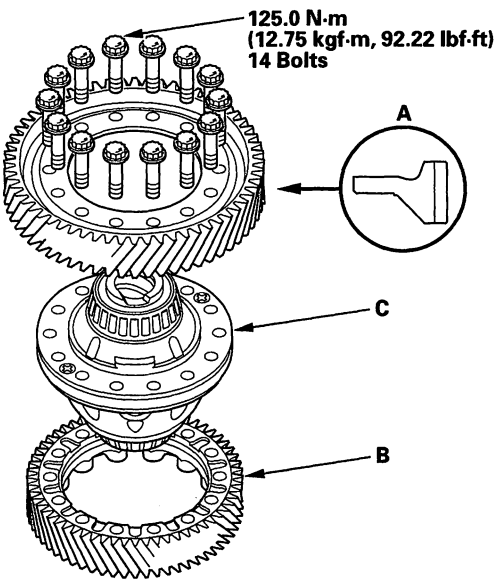


2. Install the final driven gear with the chamfered side on the inner bore facing the differential carrier.

3. Install the bolts through the differential carrier to the transfer drive gear.

4. Tighten the bolts to the specified torque in a crisscross pattern.



BACK

Protected by AR

## Carrier Bearing Replacement

**Special Tools Required**
Attachment, 45 x 55 mm 07MAD-PR90100

NOTE:
- The bearing and outer race should be replaced as a set.
- Inspect and adjust the bearing preload whenever the bearing is replaced.
- Check the bearing for wear and rough rotation. If the bearing is OK, removal is not necessary.

1. Remove the carrier bearing (A) with a commercially available bearing puller (B), bearing separator (C), and stepped adapter (D).

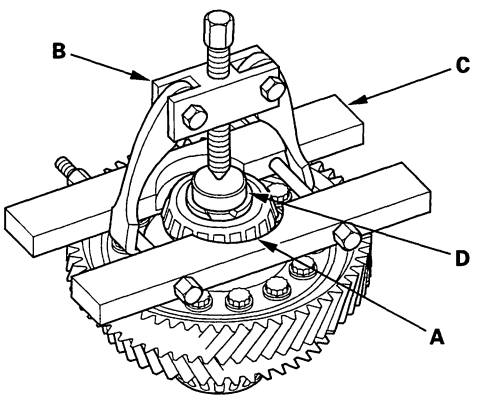


2. Install the new carrier bearings using the attachment (45 x 55 mm) and the press.

NOTE:
- Press the bearing on until it bottoms.
- Use the small end of the attachment (45 x 55 mm) to install the bearings.
- Press the bearing on securely so there is no clearance between the bearing and the differential carrier.

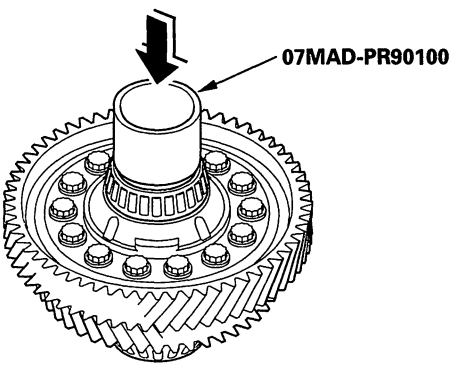

Protected by AR



## Oil Seal Replacement

**Special Tools Required**
- Driver 07749-0010000
- Oil seal driver attachment 07GAD-PG40100
- Oil seal driver attachment 07JAD-PH80101

1. Remove the oil seal from the transmission housing.

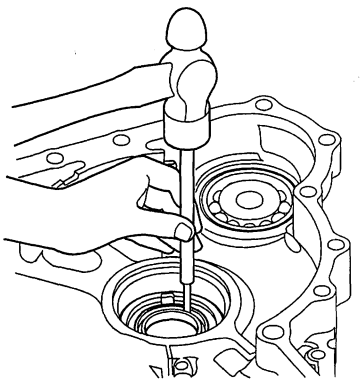

2. Remove the oil seal from the torque converter housing.

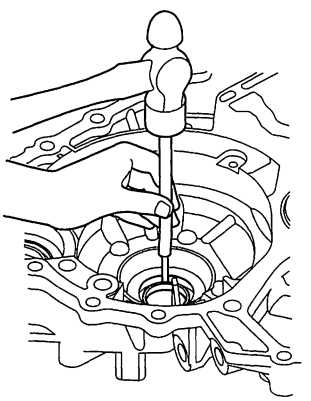

3. Install the new oil seal flush to the transmission housing using the drive and the oil seal driver attachment.

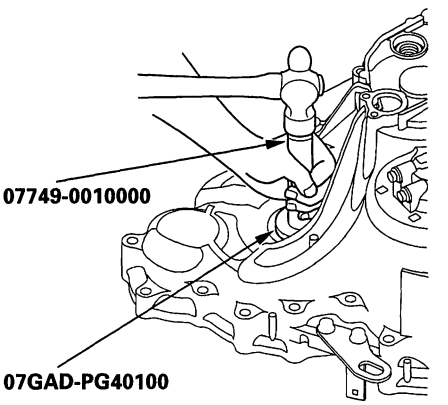


4. Install the new oil seal to the torque converter housing using the drive and the oil seal driver attachment.

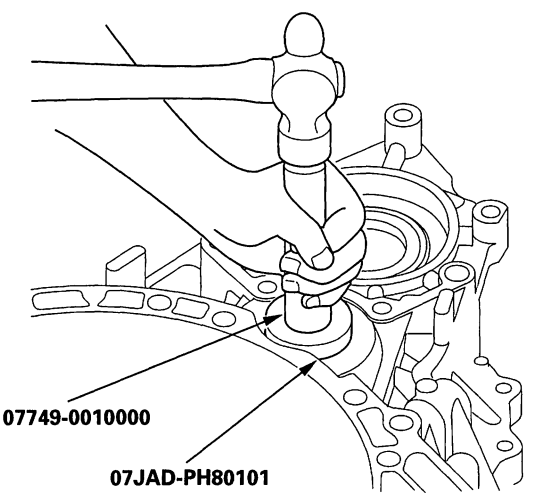




BACK

Protected by AR

## Carrier Bearing Outer Race Replacement

**Special Tools Required**
- Driver 07749-0010000
- Attachment, 83 mm 07HAD-SG00100
- Attachment, 78 x 80 mm 07NAD-PX40100

NOTE:
- Replace the bearing with a new one whenever the outer race is replaced.
- Do not use shim(s) on the torque converter housing side.
- Adjust the preload after replacing the bearing and the outer race.
- Coat all parts with ATF during installation.

1. Remove the bearing outer race (A), spacer (B), and 85 mm thrust shim (C) from the transmission housing (D) by heating the housing to about 212 °F (100 °C) with a heat gun (E). Do not heat the housing more than 212 °F (100 °C).

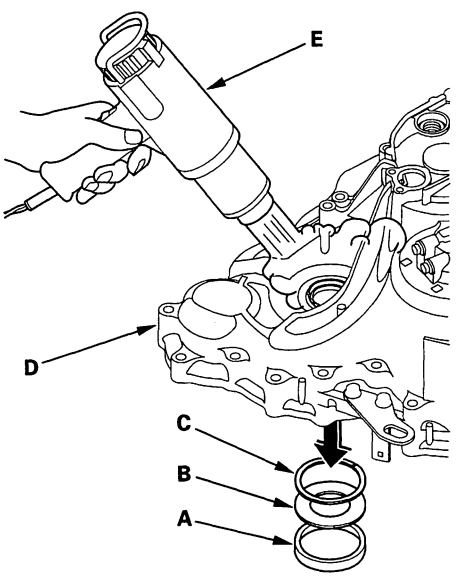


2. Install the 85 mm thrust shim (A), spacer (B), and outer race (C) in the transmission housing (D).

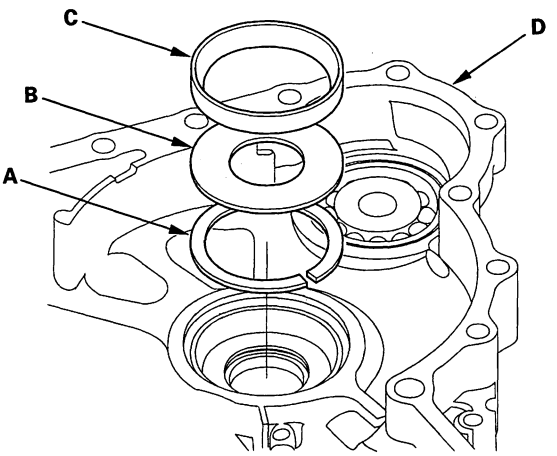


3. Using the driver and the attachment (83 mm), drive the outer race securely in the housing so there is no clearance between the outer race, spacer, shim, and housing.

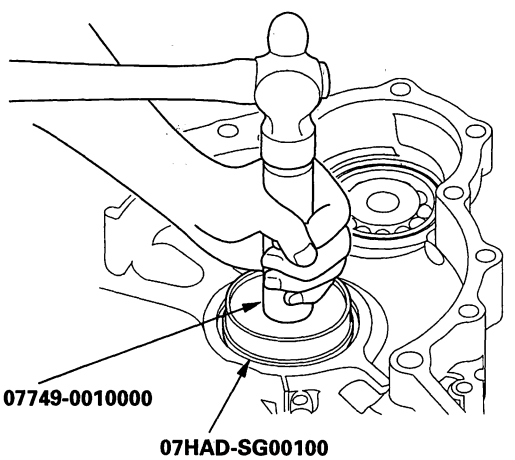


(cont'd)

Protected by AR



## Carrier Bearing Outer Race Replacement (cont'd)

4. Remove the plate (A), and remove the bearing outer race (B) and spacer (C) from the torque converter housing (D).

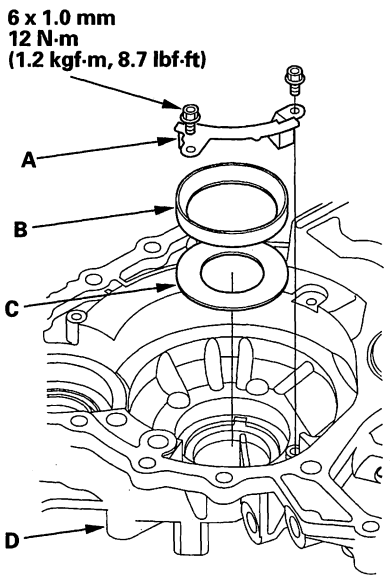


5. Install the spacer and the new outer race in the torque converter housing.

6. Drive the bearing outer race securely in the housing using the driver and the attachment (78 x 80 mm).

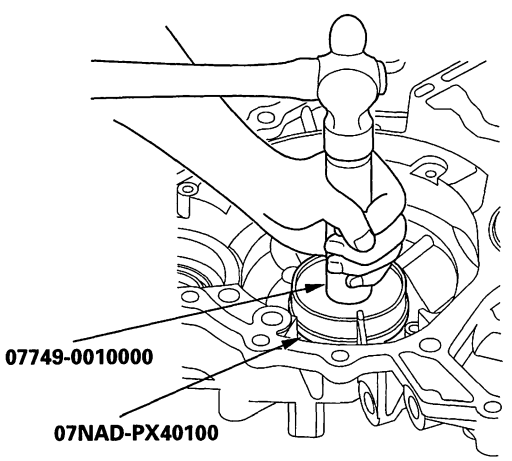


7. Install the plate over the outer race in the torque converter housing.



BACK

Protected by AR

## Carrier Bearing Preload Inspection

**Special Tools Required**
- Driver 07749-0010000
- Attachment, 83 mm 07HAD-SG00100
- Preload inspection tool 070AJ-0020101

NOTE: If the transmission housing, torque converter housing, differential carrier, tapered roller bearing, bearing outer race, or thrust shim were replaced, the bearing preload must be adjusted.

1. Remove the bearing outer race (A), spacer (B), and 85 mm thrust shim (C) from the transmission housing (D) by heating the housing to about 212 °F (100 °C) with a heat gun (E). Do not heat the housing more than 212 °F (100 °C).

   NOTE: Let the transmission housing cool to room temperature before adjusting the bearing preload.

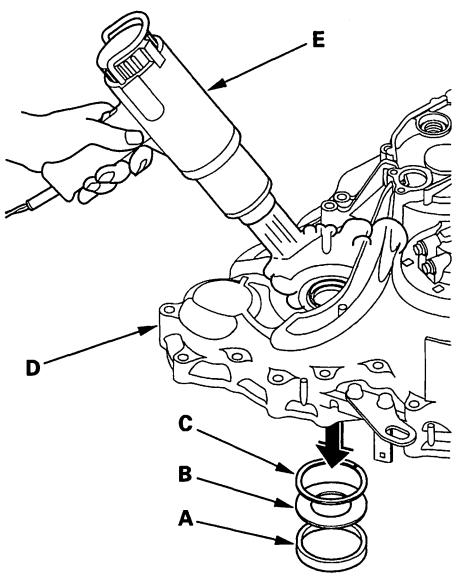


2. Replace the tapered roller bearing when the outer race is to be replaced.

3. Do not use a shim on the torque converter housing side.

4. Install the 85 mm thrust shim (A) in the transmission housing (B). If you replace the 85 mm thrust shim with a new one, use the same thickness shim as the old one.

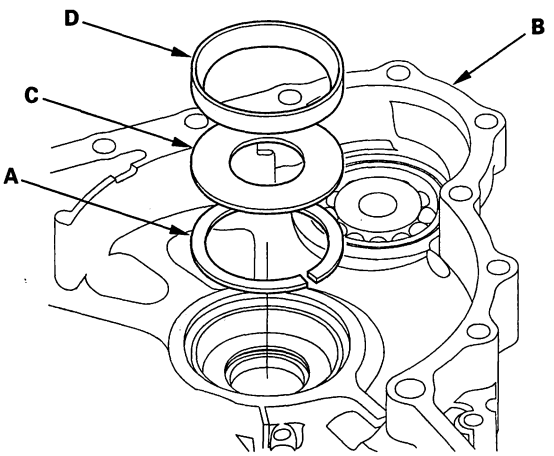


5. Install the spacer (C), and the bearing outer race (D) in the transmission housing.

6. Drive the outer race securely in the housing using the driver and the attachment (83 mm) so there is no clearance between the outer race, spacer, shim, and housing.

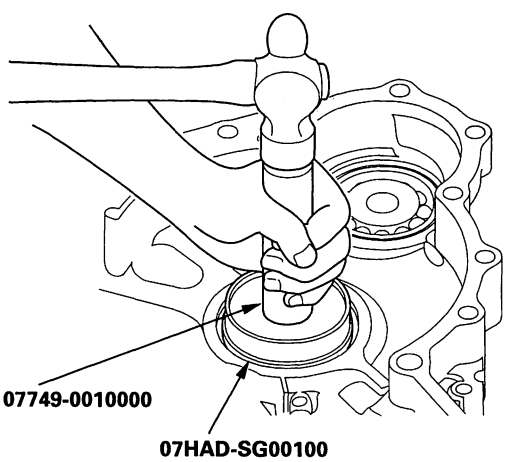


(cont'd)

Protected by AR



## Carrier Bearing Preload Inspection (cont'd)

7. Install the differential assembly (A) in the torque converter housing (B), and install the gasket (C) and the two dowel pins (D) on the housing.

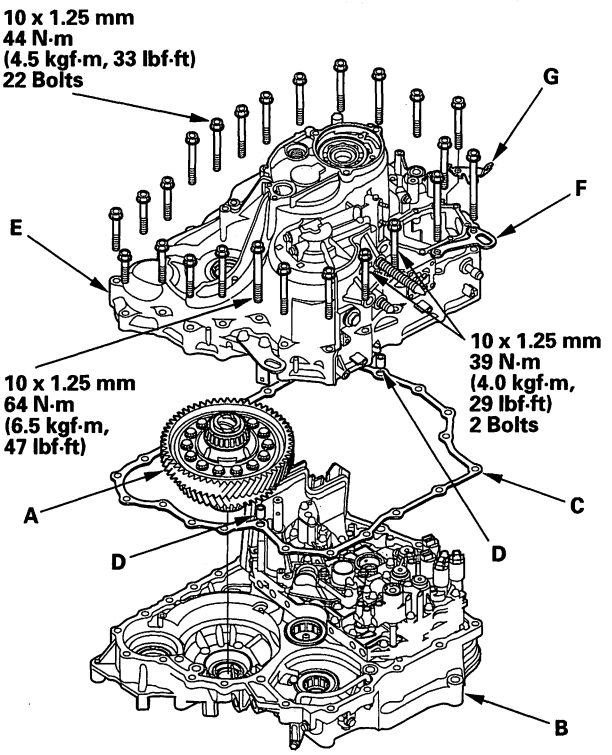


8. Install the transmission housing (E), and install the mounting bolts (24 bolts) with the transmission hangers (F) and the ground terminal bracket (G), then tighten the bolts.

9. Rotate the differential assembly in both directions to seat the bearings.

10. Measure the starting torque of the differential assembly with the preload inspection tool, a torque wrench (A), and a socket (B). Measure the starting torque at normal room temperature in both directions.

**Standard**
**New bearings:**
**3.9—5.1 N·m (40—52 kgf·cm, 35—45 lbf·in.)**
**Reused bearings:**
**3.6—4.8 N·m (37—49 kgf·cm, 32—43 lbf·in.)**

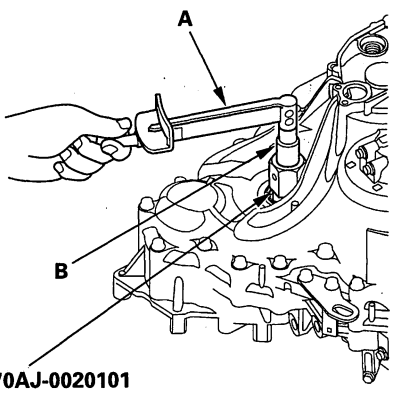


11. If the measurement is out of standard, remove the thrust shim and measure its thickness.



BACK

Protected by AR

12. Select a new thrust shim. To increase the starting torque, increase thickness of the thrust shim. To decrease the starting torque, decrease the thickness of the thrust shim.
Changing the shim to the next size will increase or decrease the starting torque about 0.5—0.6 N·m (5—6 kgf·cm, 5—5 lbf·in.).

**THRUST SHIM, 85 mm**

| No. | Part Number | Thickness |
|---|---|---|
| A | 41440-RGR-000 | 1.350 mm (0.0531 in.) |
| B | 41441-RGR-000 | 1.375 mm (0.0541 in.) |
| C | 41442-RGR-000 | 1.400 mm (0.0551 in.) |
| D | 41443-RGR-000 | 1.425 mm (0.0561 in.) |
| E | 41444-RGR-000 | 1.450 mm (0.0571 in.) |
| F | 41445-RGR-000 | 1.475 mm (0.0581 in.) |
| G | 41446-RGR-000 | 1.500 mm (0.0591 in.) |
| H | 41447-RGR-000 | 1.525 mm (0.0600 in.) |
| I | 41448-RGR-000 | 1.550 mm (0.0610 in.) |
| J | 41449-RGR-000 | 1.575 mm (0.0620 in.) |
| K | 41450-RGR-000 | 1.600 mm (0.0630 in.) |
| L | 41451-RGR-000 | 1.625 mm (0.0640 in.) |
| M | 41452-RGR-000 | 1.650 mm (0.0650 in.) |
| N | 41453-RGR-000 | 1.675 mm (0.0659 in.) |
| O | 41454-RGR-000 | 1.700 mm (0.0669 in.) |
| P | 41455-RGR-000 | 1.725 mm (0.0679 in.) |
| Q | 41456-RGR-000 | 1.750 mm (0.0689 in.) |
| R | 41457-RGR-000 | 1.775 mm (0.0699 in.) |
| S | 41458-RGR-000 | 1.800 mm (0.0709 in.) |
| T | 41459-RGR-000 | 1.825 mm (0.0719 in.) |
| U | 41460-RGR-000 | 1.850 mm (0.0728 in.) |
| V | 41461-RGR-000 | 1.875 mm (0.0738 in.) |
| W | 41462-RGR-000 | 1.900 mm (0.0748 in.) |
| X | 41463-RGR-000 | 1.925 mm (0.0758 in.) |
| Y | 41464-RGR-000 | 1.950 mm (0.0768 in.) |
| Z | 41465-RGR-000 | 1.975 mm (0.0778 in.) |

**THRUST SHIM, 85 mm (cont'd)**

| No. | Part Number | Thickness |
|---|---|---|
| AA | 41466-RGR-000 | 2.000 mm (0.0787 in.) |
| AB | 41467-RGR-000 | 2.025 mm (0.0797 in.) |
| AC | 41468-RGR-000 | 2.050 mm (0.0807 in.) |
| AD | 41469-RGR-000 | 2.075 mm (0.0817 in.) |
| AE | 41470-RGR-000 | 2.100 mm (0.0827 in.) |
| AF | 41471-RGR-000 | 2.125 mm (0.0837 in.) |
| AG | 41472-RGR-000 | 2.150 mm (0.0846 in.) |
| AH | 41473-RGR-000 | 2.175 mm (0.0856 in.) |
| AI | 41474-RGR-000 | 2.200 mm (0.0866 in.) |
| AJ | 41475-RGR-000 | 2.225 mm (0.0876 in.) |
| AK | 41476-RGR-000 | 2.250 mm (0.0886 in.) |
| AL | 41477-RGR-000 | 2.275 mm (0.0896 in.) |
| AM | 41478-RGR-000 | 2.300 mm (0.0906 in.) |
| AN | 41479-RGR-000 | 2.325 mm (0.0915 in.) |
| AO | 41480-RGR-000 | 2.350 mm (0.0925 in.) |

13. Install the new thrust shim, then recheck the starting torque.

Protected by AR

# Transfer Output Shaft

## Component Location Index

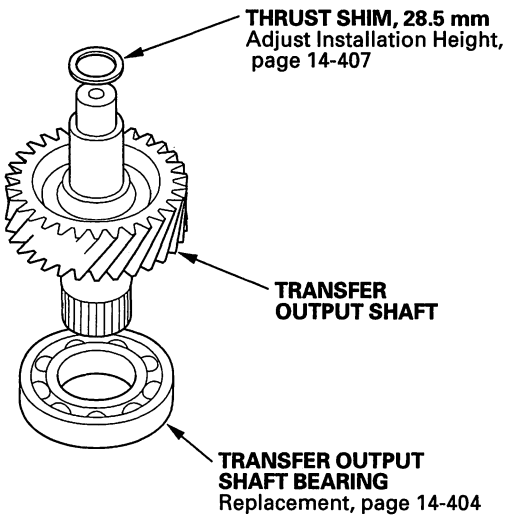


## Transfer Output Shaft Bearing Replacement

**Special Tools Required**
Driver, 40 mm I.D. 07746-0030100

1. Remove the transfer output shaft bearing (A) with a commercially available puller (B), bearing separator (C), and shaft protector (D). Place a shaft protector between the transfer output shaft and the puller to prevent damaging the shaft.

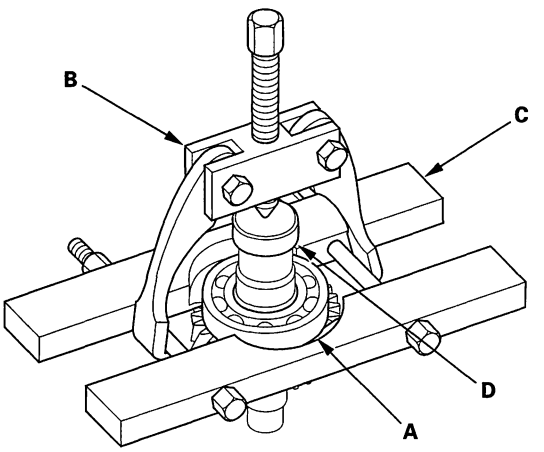


2. Install the new bearing (A) on the transfer output shaft (B) using the driver (40 mm I.D.) and the press.

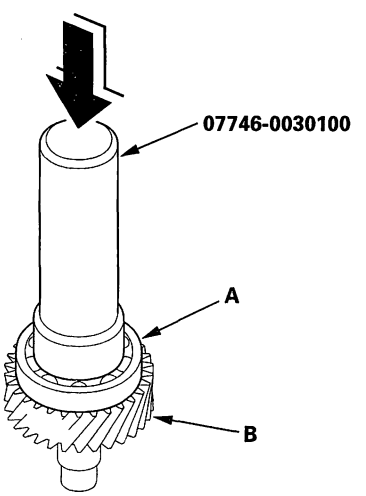




BACK

Protected by AR

## Oil Seal Replacement

**Special Tools Required**
- Driver 07749-0010000
- Attachment, 65 mm 07JAD-SH30100

1. Remove the oil seal from the torque converter housing.

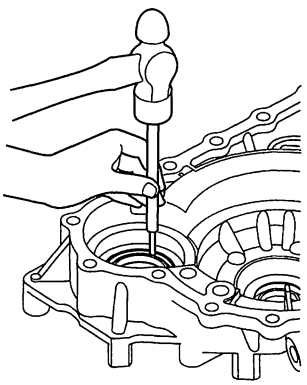

2. Install the new oil seal flush to the torque converter housing using the driver and the attachment (65 mm).

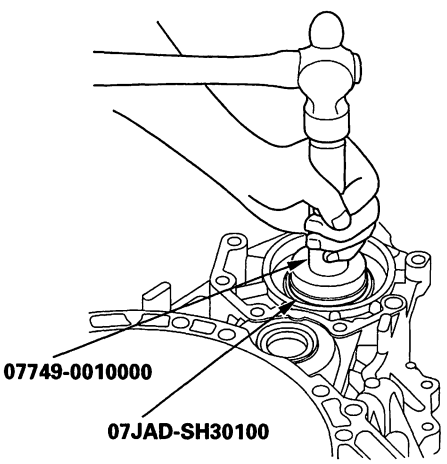

Protected by AR



## Transmission Housing Bearing Replacement

**Special Tools Required**
- Driver 07749-0010000
- Attachment, 72 x 75 mm 07746-0010600

1. Remove the transfer output shaft bearing (A) from the transmission housing (B) by heating the housing to about 212 °F (100 °C) with a heat gun (C). Do not heat the housing more than 212 °F (100 °C).

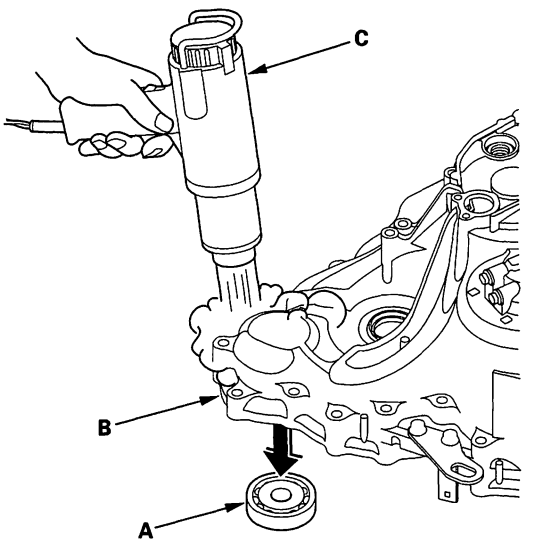


2. Install the new bearing in the housing in the direction shown.

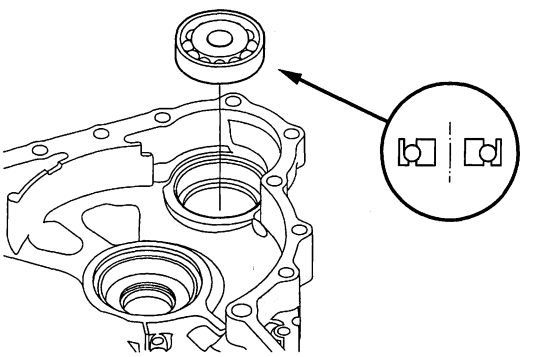

3. Drive the new bearing until it bottoms in the housing using the driver and the attachment (72 x 75 mm).

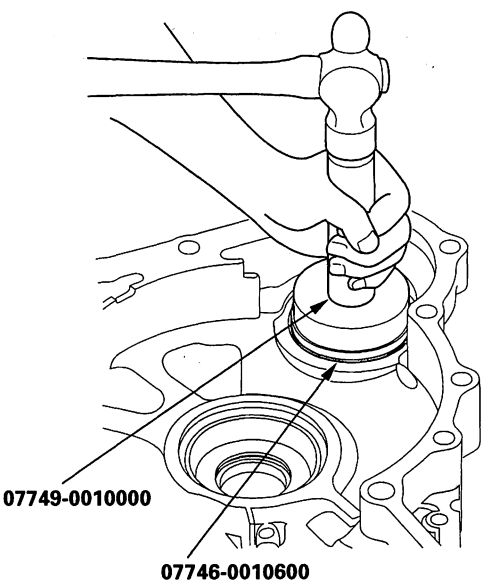




BACK

Protected by AR

# Transfer Output Shaft Installation Height Inspection/Adjustment

NOTE: If the transfer output shaft, transfer output shaft bearing, transfer output shaft transmission housing bearing, transmission housing, or torque converter housing were replaced, adjust the transfer output shaft installation height with the 28.5 mm thrust shim.

1. Install the transfer output shaft (A) in the torque converter housing, and install the 28.5 mm thrust shim (B) on the top of the shaft. If you replace the 28.5 mm thrust shim with a new one, use the same thickness shim as the old one.

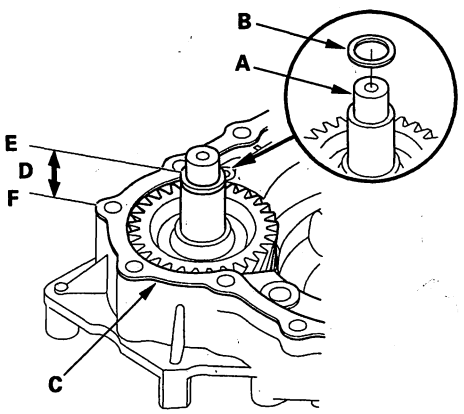


2. Install the new gasket (C) on the torque converter housing.

3. Measure the height (D) of the transfer output shaft installation between the surface (E) of the gasket and the top (F) of the 28.5 mm thrust shim in at least three places. Use the average as the actual height.

   **Standard: 46.31—46.35 mm (1.823—1.825 in.)**

   **Transfer Output Shaft Cutaway View:**

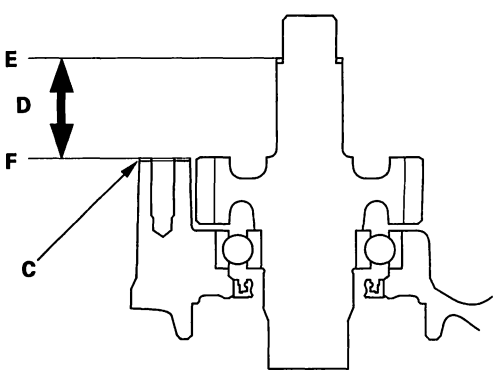


4. If the measurement is out of standard, remove the 28.5 mm thrust shim and measure its thickness.

5. Select and install a new thrust shim, then recheck the installation height.

**THRUST SHIM, 28.5 mm**

| No. | Part Number | Thickness |
|---|---|---|
| A | 29031-RDK-000 | 1.82 mm (0.0717 in.) |
| B | 29032-RDK-000 | 1.84 mm (0.0724 in.) |
| C | 29033-RDK-000 | 1.86 mm (0.0732 in.) |
| D | 29034-RDK-000 | 1.88 mm (0.0740 in.) |
| E | 29035-RDK-000 | 1.90 mm (0.0748 in.) |
| F | 29036-RDK-000 | 1.92 mm (0.0756 in.) |
| G | 29037-RDK-000 | 1.94 mm (0.0764 in.) |
| H | 29038-RDK-000 | 1.96 mm (0.0772 in.) |
| I | 29039-RDK-000 | 1.98 mm (0.0780 in.) |
| J | 29040-RDK-000 | 2.00 mm (0.0787 in.) |
| K | 29041-RDK-000 | 2.02 mm (0.0795 in.) |
| L | 29042-RDK-000 | 2.04 mm (0.0803 in.) |
| M | 29043-RDK-000 | 2.06 mm (0.0811 in.) |
| N | 29044-RDK-000 | 2.08 mm (0.0819 in.) |
| O | 29045-RDK-000 | 2.10 mm (0.0827 in.) |
| P | 29046-RDK-000 | 2.12 mm (0.0835 in.) |
| Q | 29047-RDK-000 | 2.14 mm (0.0843 in.) |
| R | 29048-RDK-000 | 2.16 mm (0.0850 in.) |
| S | 29049-RDK-000 | 2.18 mm (0.0858 in.) |
| T | 29050-RDK-000 | 2.20 mm (0.0866 in.) |
| U | 29051-RDK-000 | 2.22 mm (0.0874 in.) |
| V | 29052-RDK-000 | 2.24 mm (0.0882 in.) |
| W | 29053-RDK-000 | 2.26 mm (0.0890 in.) |
| X | 29054-RDK-000 | 2.28 mm (0.0898 in.) |
| Y | 29055-RDK-000 | 2.30 mm (0.0906 in.) |
| Z | 29056-RDK-000 | 2.32 mm (0.0913 in.) |
| AA | 29057-RDK-000 | 2.34 mm (0.0921 in.) |

BACK

Protected by AR



## Inspection

NOTE: To prevent damage to the transfer housing, always use soft jaws or equivalent materials between the transfer housing and a vise.

**Transfer Gear Backlash Measurement**

1. Set a dial indicator (A) on the transfer companion flange (B); position dial indicator tip (C) on the direct extension of the bolt hole canter (D).

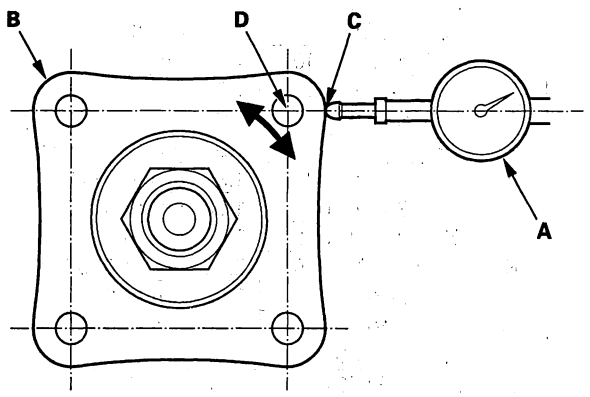


2. Measure the transfer gear backlash.

   **Standard: 0.06—0.16 mm (0.002—0.006 in.)**

**Total Starting Torque Measurement**

3. Rotate the transfer companion flange several times to seat the tapered roller bearings.

4. Measure the staring torque at the companion flange (A) using a torque wrench (B) and a socket (C).

   **Standard: 2.75—4.65 N·m (28.0—47.4 kgf·cm, 24.3—41.1 lbf·in.)**

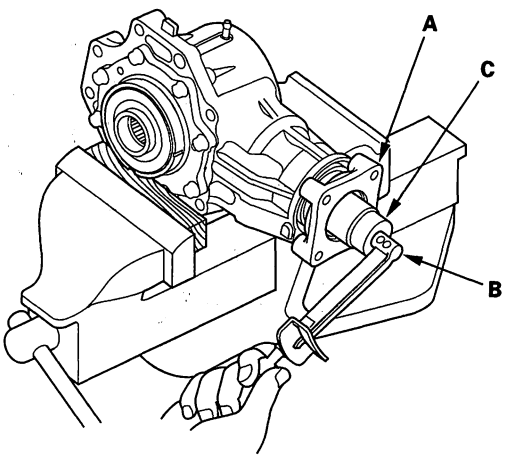


5. If the measurements are out of standard, disassemble the transfer assembly and repair it.



BACK

Protected by AR

## Disassembly

### Exploded View

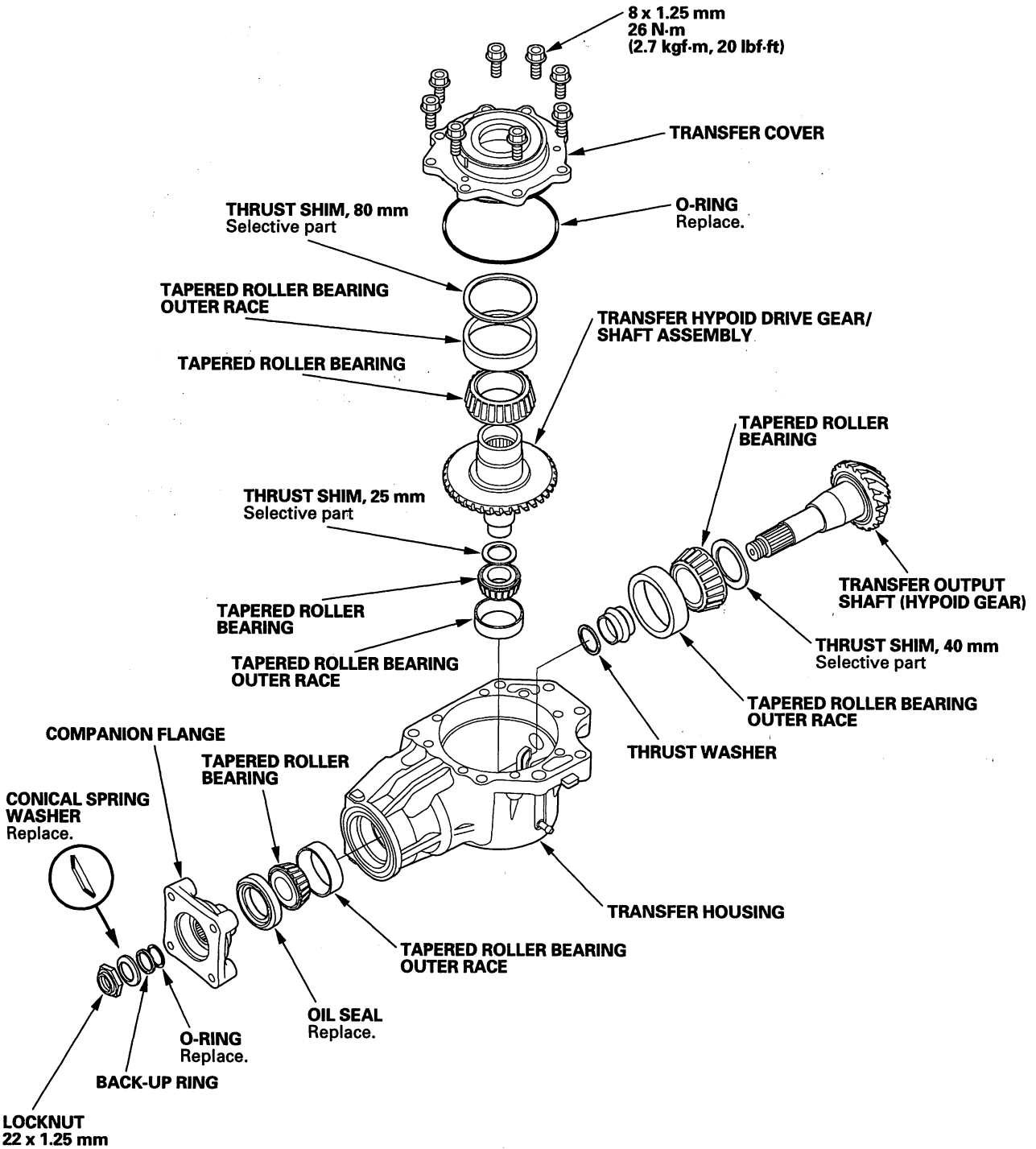


(cont'd)

Protected by AR



## Disassembly (cont'd)

**Special Tools Required**
Companion flange holder 07XAB-0010101

1. Remove the transfer cover (A) from the transfer housing (B).

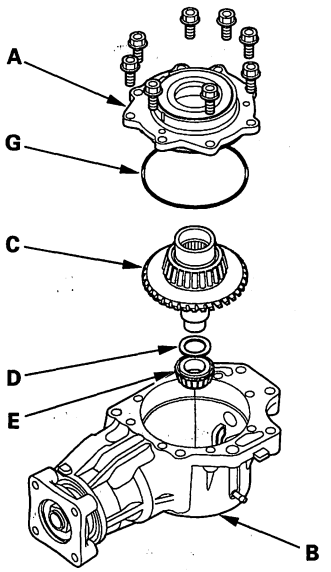


2. Remove the transfer hypoid drive gear/shaft assembly (C), 25 mm thrust shim (D), and tapered roller bearing (E).

3. Remove the O-ring (G) from the cover.

4. Drain the transfer fluid (hypoid gear oil) from the transfer housing.

5. Cut the lock tab on the locknut using a chisel.

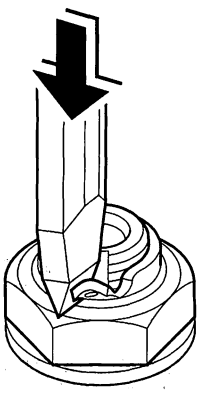

6. Secure the transfer housing in a bench vise with soft jaws. To prevent damage to the transfer housing, always use soft jaws or equivalent materials between the transfer housing and the vise.

7. Install the companion flange holder on the companion flange, then loosen the locknut.

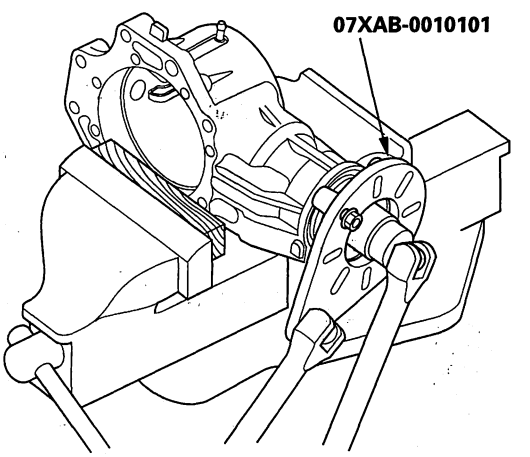


8. Remove the companion flange holder.



BACK

Protected by AR

9. Remove the locknut (A), conical spring washer (B), back-up ring (C), O-ring (D), and companion flange (E) from the transfer output shaft (hypoid gear) (F).

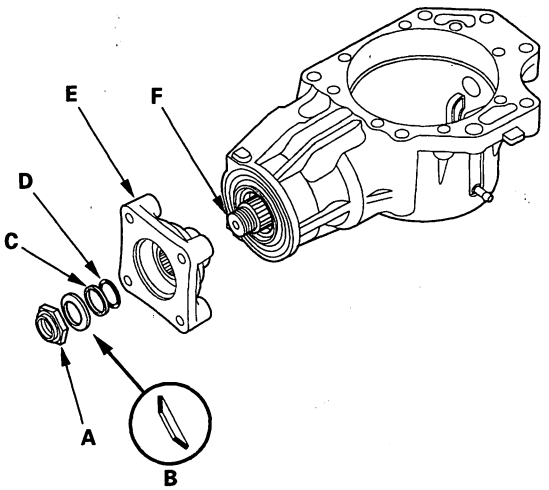


10. Remove the transfer output shaft (hypoid gear) (A) from the transfer housing (B), then remove the thrust washer (C) and transfer spacer (D) from the transfer output shaft (hypoid gear).

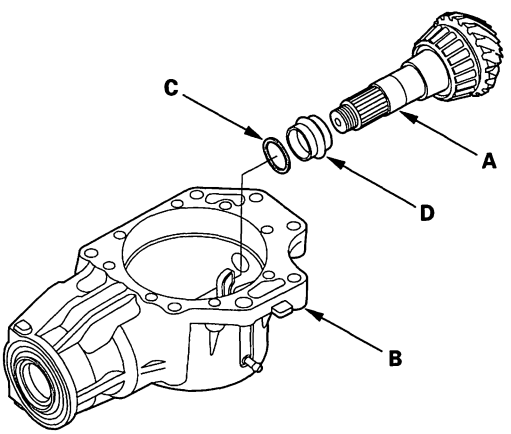


11. Remove the oil seal (A) and tapered roller bearing (B) from the transfer housing.

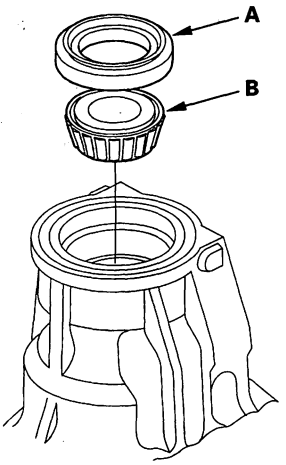

Protected by AR



## Transfer Hypoid Drive Gear Bearing Replacement

**Special Tools Required**
- Driver 07749-0010000
- Attachment, 42 x 47 mm 07746-0010300
- Attachment, 40 x 50 mm 07LAD-PW50601

1. Remove the tapered roller bearing (A) from the transfer hypoid drive gear (B) using the driver, the attachment (42 x 47 mm), bearing separator (C) and the press.

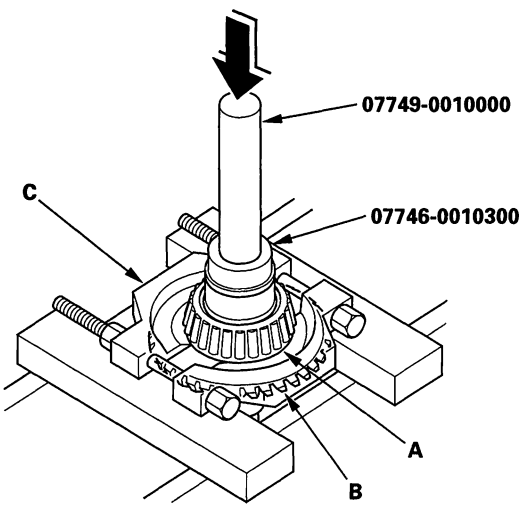


2. Install the new bearing on the transfer hypoid drive gear using the driver, the attachment (40 x 50 mm), and the press.

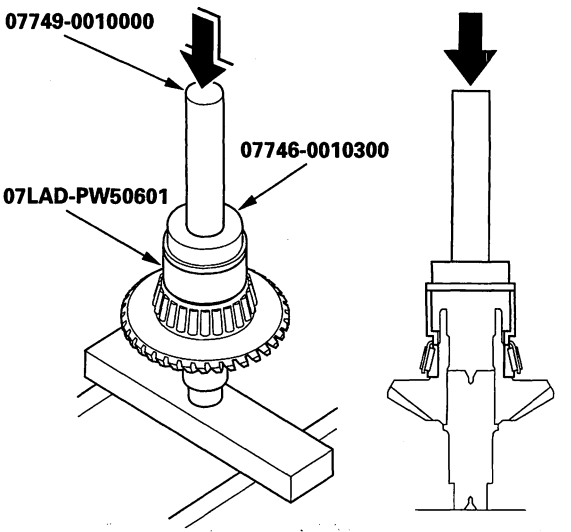




BACK

Protected by AR

# Transfer Output Shaft (Hypoid Gear) Bearing Removal/Installation

**Special Tools Required**
Driver, 40 mm I.D. 07746-0030100

1. Remove the tapered roller bearing (A) from the transfer output shaft (hypoid gear) (B) with a bearing separator (C) and the press. Place a shaft protector (D) between the transfer output shaft and the press to prevent damaging the shaft.

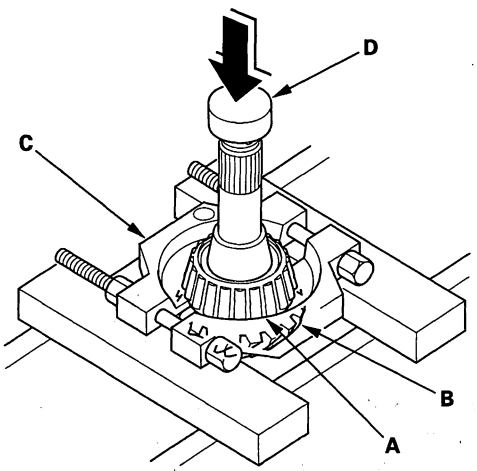


2. Install the 40 mm thrust shim (A) over the transfer output shaft (hypoid gear).

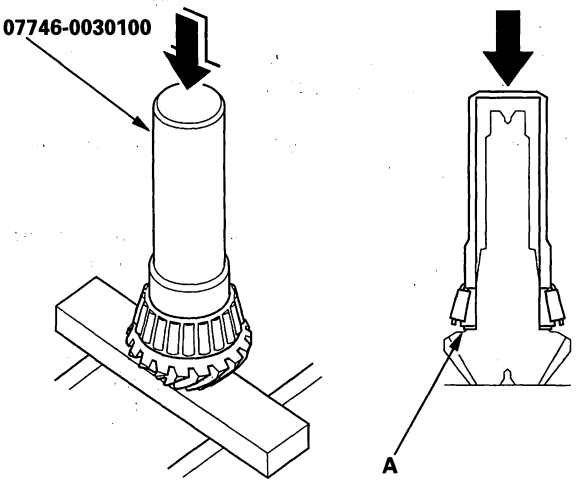


3. Install the tapered roller bearing over the transfer output shaft (hypoid gear) using the driver (40 mm I.D.) and the press.

Protected by AR



## Transfer Housing Tapered Roller Bearing Outer Race Replacement

**Special Tools Required**
- Driver 07749-0010000
- Attachment, 52 x 55 mm 07746-0010400
- Attachment, 65 mm 07JAD-SH30100
- Tapered bearing race installer A 07MAF-SP0011A
- Installer shaft 07MAF-SP0013A

NOTE: Replace the bearing with a new one whenever the outer race is replaced.

1. Remove the 52 mm bearing outer race (A), 75 mm outer race (B), and 65 mm outer race (C) from the transfer housing (D).

   NOTE: Some bearing outer races (52 mm, 65 mm, and 75 mm) are press-fitted in the housing and must be removed by heating the housing.

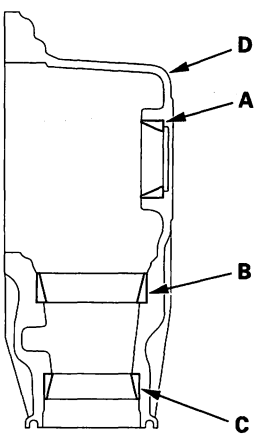


2. Remove the press-fitted bearing outer race (A) from the transfer housing (B) by heating the housing to about 212 °F (100 °C) with a heat gun (C). Do not heat the housing more than 212 °F (100 °C).

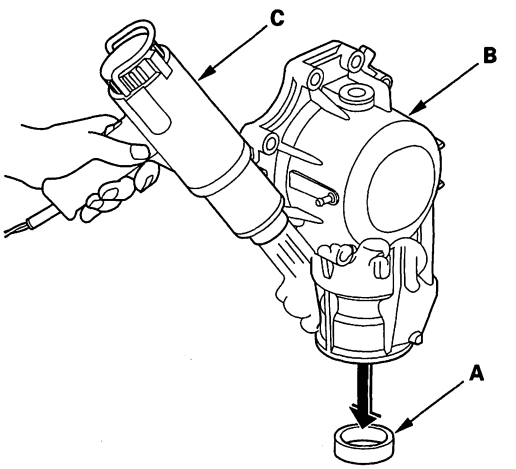


3. Install the 52 mm bearing outer race (A) until it bottoms in the transfer housing using the driver and the attachment (52 x 55 mm).

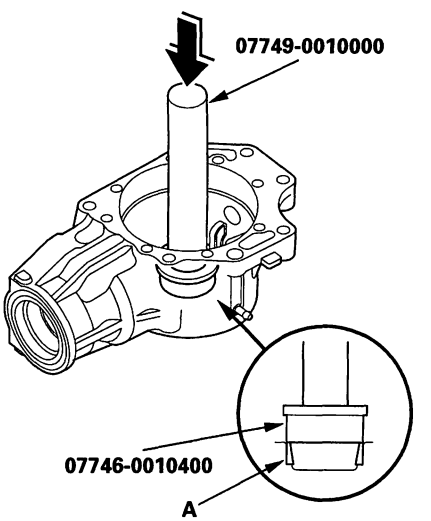




BACK

Protected by AR

4. Install the 75 mm bearing outer race (A) and 65 mm outer race (B) in the transfer housing (C), set the attachment (65 mm) and the tapered bearing race installer A over the races, and install the installer shaft through the attachment and the installer.

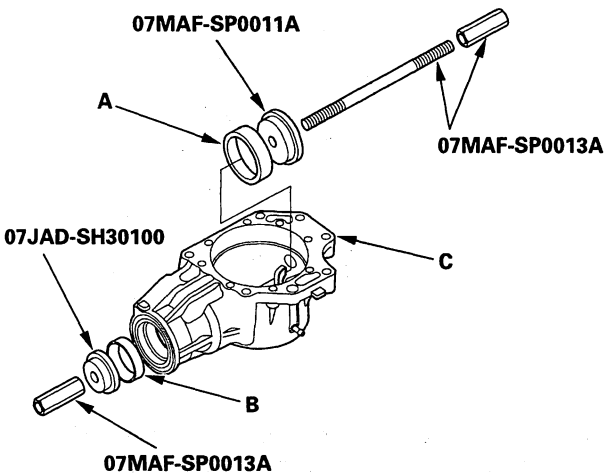


5. Tighten the installer shaft nut (D) to install the races (A) (B) into the transfer housing (C) securely.

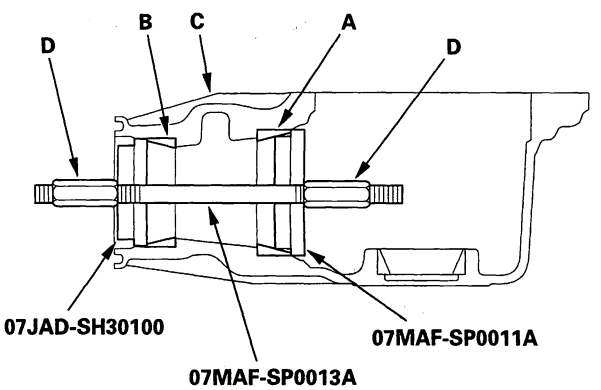

Protected by AR



## Transfer Cover Tapered Roller Bearing Outer Race Removal/Installation

**Special Tools Required**
- Driver 07749-0010000
- Attachment, 78 x 80 mm 07NAD-PX40100

NOTE: Replace the bearing with a new one whenever the outer race is replaced.

1. Remove the bearing outer race (A) and 80 mm thrust shim (B) from the transfer cover (C). If the bearing outer race is press-fitted, remove the outer race by heating the cover to about 212 °F (100 °C) with a heat gun (D). Do not heat the cover more than 212 °F (100 °C).

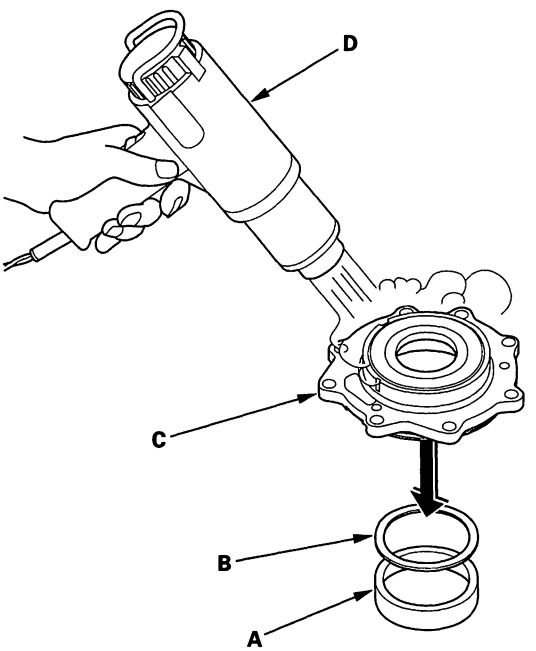


2. Install the 80 mm thrust shim (A) and bearing outer race (B) in the transfer cover (C).

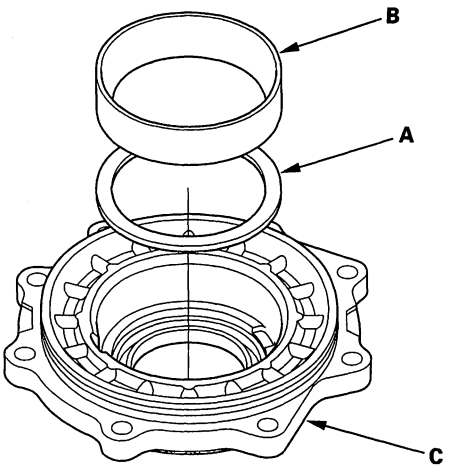


3. Drive the outer race securely in the cover using the driver and the attachment (78 x 80 mm) so there is no clearance between the outer race, thrust shim, and cover.

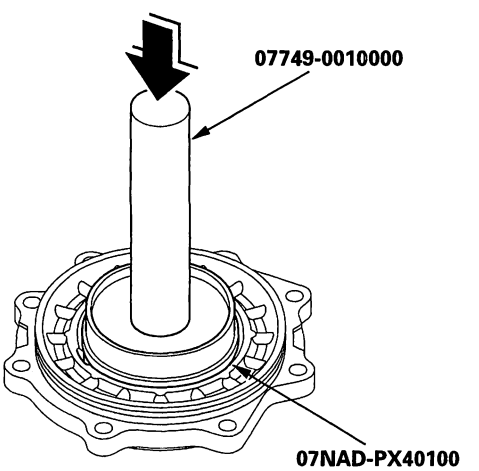




BACK

Protected by AR

## Transfer Cover Oil Seal Replacement

**Special Tools Required**
- Driver 07749-0010000
- Attachment, 65 mm 07JAD-SH30100

1. Remove the oil seal from the transfer cover.

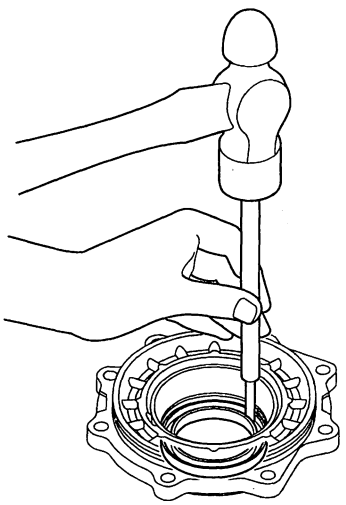

2. Install the new oil seal (A) in the transfer cover (B) in height (C) of 0—1 mm (0—0.04 in.) above the cover surface using the driver and the attachment (65 mm).

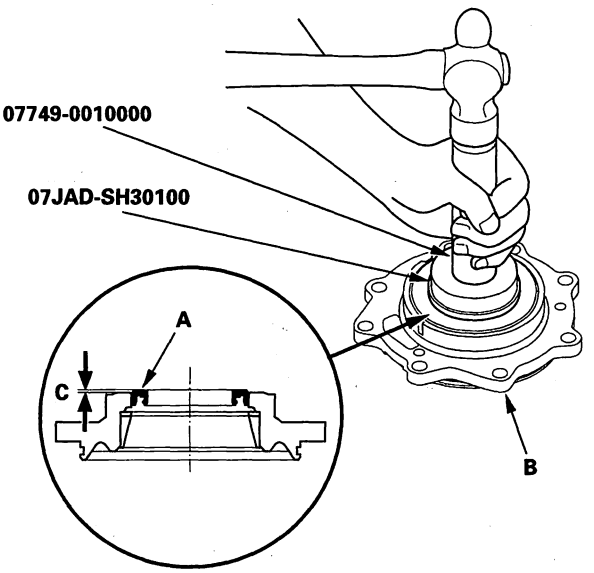

Protected by AR



## Reassembly

**Special Tools Required**
- Driver, 40 mm I.D. 07746-0030100
- Driver 07749-0010000
- Attachment, 65 mm 07JAD-SH30100
- Companion flange holder 07XAB-0010101
- Attachment, 72 x 80 mm 07NAD-PX40100

NOTE:
- While reassembling the transfer assembly:
  - Check and adjust the transfer gear tooth contact.
  - Measure and adjust the transfer gear backlash.
  - Check and adjust the tapered roller bearing starting torque.
- Coat all parts with transfer fluid (hypoid gear oil) during reassembly.
- Replace the tapered roller bearing and the bearing outer race as a set if either part is replaced.
- Replace the transfer hypoid drive gear and the transfer output shaft (hypoid gear) as a set if either part is replaced.

1. Select the 40 mm thrust shim if the transfer output shaft (hypoid gear) is replaced. Calculate the thickness of the 40 mm thrust shim using the formula below, and select the shim from the following table.

**FORMULA:** $\frac{A}{100} - \frac{B}{100} + C = X$

**A: Number on the existing transfer output shaft (hypoid gear)**
**B: Number on the replacement transfer output shaft (hypoid gear)**
**C: Thickness of the existing 40 mm thrust shim**
**X: Thickness needed for the replacement 40 mm thrust shim**

**NOTE: The number on the transfer output shaft (hypoid gear) is shown in 1/100 mm.**

**EXAMPLE**

**C: EXISTING 40 mm THRUST SHIM Thickness: C=1.05 mm**

**X: REPLACEMENT 40 mm THRUST SHIM Thickness: X= ? ? mm**

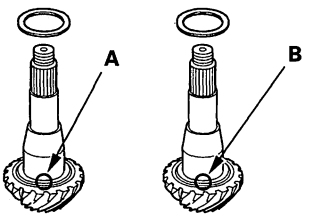


**A: EXISTING TRANSFER OUTPUT SHAFT (HYPOID GEAR) Number: A=+2**

**B: REPLACEMENT TRANSFER OUTPUT SHAFT (HYPOID GEAR) Number: B=−1**

$$X = \frac{A}{100} - \frac{B}{100} + C$$

$$= \frac{2}{100} - \frac{-1}{100} + 1.05$$

$$= 0.02 + 0.01 + 1.05 = 1.08 \text{ (mm)}$$

**Select No. M 40 mm thrust shim of 1.08 mm (0.043 in.).**

**THRUST SHIM, 40 mm**

| Shim No. | Part Number | Thickness |
|---|---|---|
| A | 29361-RDK-000 | 0.72 mm (0.028 in.) |
| B | 29362-RDK-000 | 0.75 mm (0.030 in.) |
| C | 29363-RDK-000 | 0.78 mm (0.031 in.) |
| D | 29364-RDK-000 | 0.81 mm (0.032 in.) |
| E | 29365-RDK-000 | 0.84 mm (0.033 in.) |
| F | 29366-RDK-000 | 0.87 mm (0.034 in.) |
| G | 29367-RDK-000 | 0.90 mm (0.035 in.) |
| H | 29368-RDK-000 | 0.93 mm (0.037 in.) |
| I | 29369-RDK-000 | 0.96 mm (0.038 in.) |
| J | 29370-RDK-000 | 0.99 mm (0.039 in.) |
| K | 29371-RDK-000 | 1.02 mm (0.040 in.) |
| L | 29372-RDK-000 | 1.05 mm (0.041 in.) |
| M | 29373-RDK-000 | 1.08 mm (0.043 in.) |
| N | 29374-RDK-000 | 1.11 mm (0.044 in.) |
| O | 29375-RDK-000 | 1.14 mm (0.045 in.) |

2. Select the 40 mm thrust shim if the tapered roller bearing on the transfer output shaft (hypoid gear) is replaced. Measure the thickness of the replacement bearing and the existing bearing, and calculate the difference of the bearing thickness. Adjust the thickness of the existing 40 mm thrust shim by the amount of difference in bearing thickness, and select the replacement 40 mm thrust shim.



BACK

Protected by AR

3. Install the 40 mm thrust shim (A) on the transfer output shaft (hypoid gear) (B), then install the tapered roller bearing (C) using the driver (40 mm I.D.) and the press.

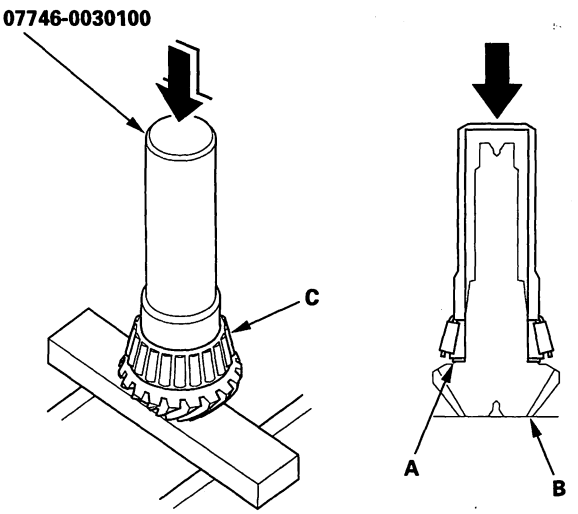


4. Place the tapered roller bearing on the bearing outer race of the companion flange side of the transfer housing.

5. Install the new oil seal on the transfer housing using the driver, the attachment (65 mm), and the press.

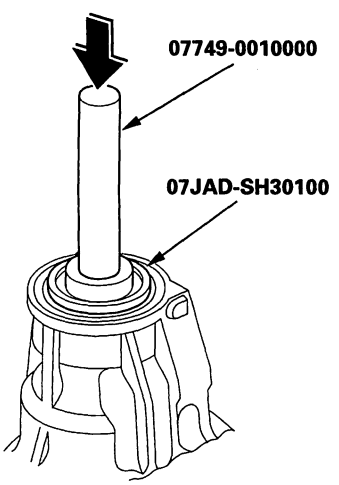


6. Install the transfer output shaft (hypoid gear) (A) in the transfer housing (B). Do not install the thrust washers and transfer spacer on the transfer output shaft.

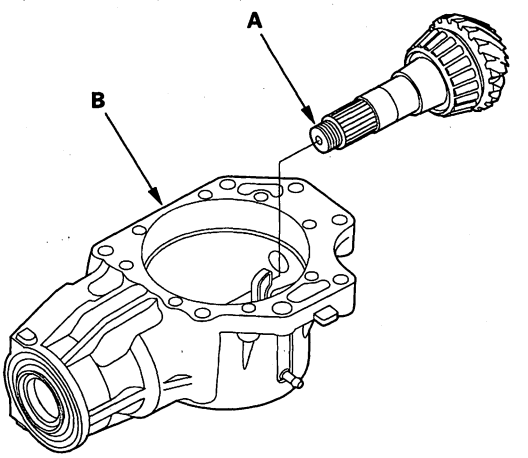


7. Install the companion flange (A), conical spring washer (B) in the direction shown, and locknut (C) on the transfer output shaft (hypoid gear) (D). Do not install the O-ring and back-up ring on the transfer output shaft.

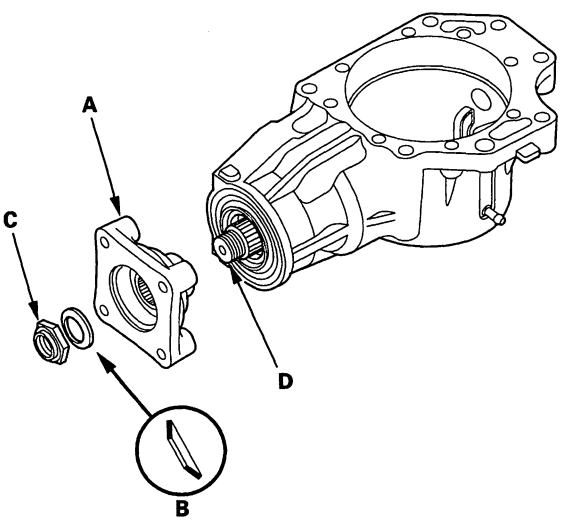


(cont'd)

Protected by AR



## Reassembly (cont'd)

8. Secure the transfer housing (A) in a bench vise (B) with soft jaws, then install the companion flange holder on the companion flange. To prevent damage to the transfer housing, always use soft jaws or equivalent materials between the transfer housing and the vise.

9. Tighten the locknut while measuring the starting torque of the transfer output shaft (hypoid gear) so the starting torque is within 1.15—1.71 N·m (11.7—17.4 kgf·cm, 10.2—15.1 lbf·in.).

   NOTE: Do not stake the locknut in this step.

   **Starting Torque:**
   **1.15—1.71 N·m**
   **(11.7—17.4 kgf·cm, 10.2—15.1 lbf·in.)**

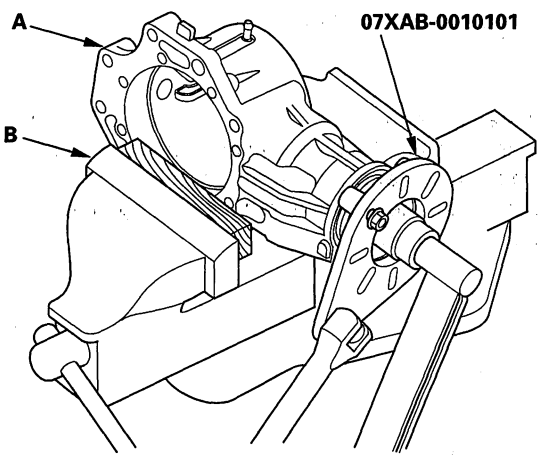


10. Apply Prussian Blue to both side of the transfer hypoid drive gear teeth lightly and evenly.

11. Install the tapered roller bearing (A), 25 mm thrust shim (B), and transfer hypoid drive gear/shaft assembly (C) in the transfer housing (D).

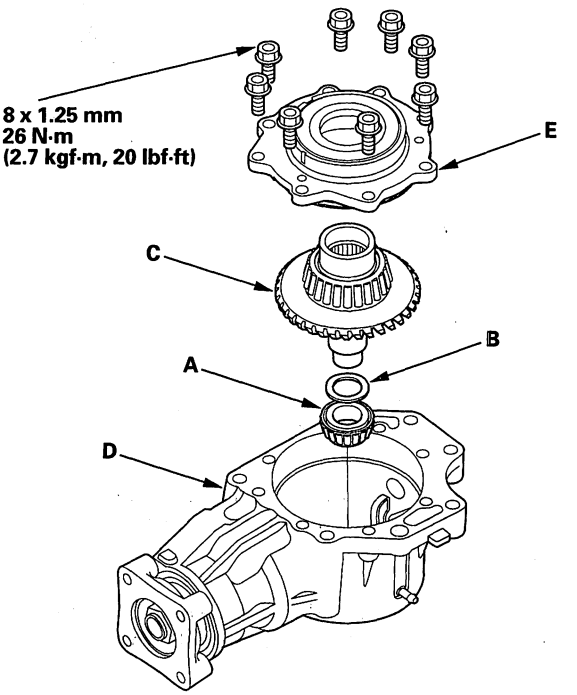


12. Install the transfer cover (E) and the bolts, and tighten the bolts. Do not install the O-ring on the transfer cover.

13. Rotate the companion flange several times to seat the tapered roller bearings.



BACK

Protected by AR

14. Set a dial indicator (A) on the transfer companion flange (B); position dial indicator tip (C) on the direct extension of the bolt hole center (D).

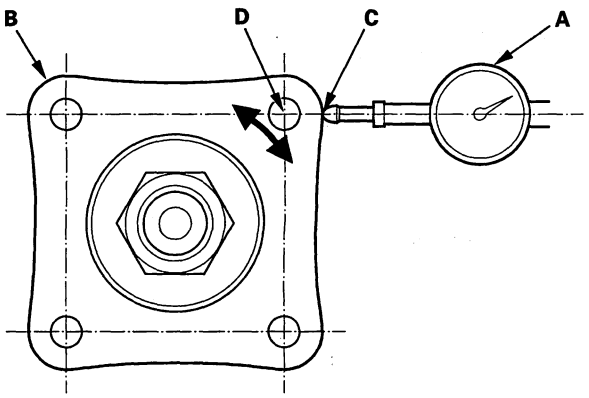


15. Measure the transfer gear backlash.

**Standard: 0.06—0.16 mm (0.002—0.006 in.)**

16. Remove the transfer cover, transfer hypoid drive gear/shaft assembly, and check the transfer hypoid drive gear tooth contact pattern.

**CORRECT TOOTH CONTACT PATTERN**

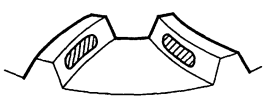

**INCORRECT TOOTH CONTACT PATTERN**

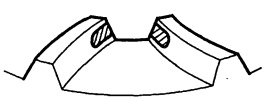

**TOE CONTACT**

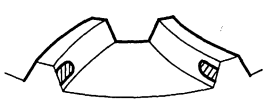

**HEEL CONTACT**

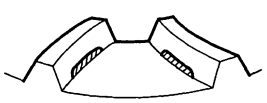

**FLANK CONTACT**

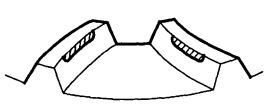

**FACE CONTACT**

17. If the measurement of the backlash is out of the standard, adjust the transfer gear backlash with the 40 mm thrust shim and recheck. Do not use more than two 40 mm thrust shims to adjust the transfer gear backlash.

18. If the transfer gear tooth contact is incorrect, adjust the transfer gear tooth contact with the 25 mm or 40 mm thrust shim. Do not use more than two shims of each thrust shim to adjust the tooth contact.

- Toe Contact
  Use a thinner 40 mm thrust shim to move the transfer output shaft (hypoid gear) away from the transfer hypoid drive gear. Because this movement causes the transfer gear backlash to change, move the transfer hypoid drive gear toward the transfer output shaft (hypoid gear) to adjust the transfer gear backlash as follows:
  – Reduce the thickness of the 25 mm thrust shim.
  – Increase the thickness of the 80 mm thrust shim by amount of reduce thickness of the 25 mm thrust shim.
- Heel Contact
  Use a thicker 40 mm thrust shim to move the transfer output shaft (hypoid gear) toward the transfer hypoid drive gear. Because this movement causes the transfer backlash to change, move the transfer hypoid drive gear away from the transfer output shaft (hypoid gear) to adjust the transfer gear backlash as follows:
  – Increase the thickness of the 25 mm thrust shim.
  – Reduce the thickness of the 80 mm thrust shim by the amount of increase thickness of the 25 mm thrust shim.
- Flank Contact
  Use a thicker 25 mm thrust shim to move the transfer hypoid drive gear away from the transfer output shaft (hypoid gear).
  Flank contact must be adjusted within the limits of the transfer gear backlash. If the backlash exceeds the limits, adjust as described under Heel Contact.
- Face Contact
  Use a thinner 25 mm thrust shim to move the transfer hypoid drive gear toward the transfer output shaft (hypoid gear).
  Face contact must be adjusted within the limits of the transfer gear backlash. If the backlash exceeds the limits, adjust as described under Toe Contact.

(cont'd)

Protected by AR



## Reassembly (cont'd)

**THRUST SHIM, 25 mm**

| Shim No. | Part Number | Thickness |
|---|---|---|
| 1.70 | 29411-P1C-000 | 1.70 mm (0.067 in.) |
| 1.73 | 29412-P1C-000 | 1.73 mm (0.068 in.) |
| 1.76 | 29413-P1C-000 | 1.76 mm (0.069 in.) |
| 1.79 | 29414-P1C-000 | 1.79 mm (0.070 in.) |
| 1.82 | 29415-P1C-000 | 1.82 mm (0.072 in.) |
| 1.85 | 29416-P1C-000 | 1.85 mm (0.073 in.) |
| 1.88 | 29417-P1C-000 | 1.88 mm (0.074 in.) |
| 1.91 | 29418-P1C-000 | 1.91 mm (0.075 in.) |
| 1.94 | 29419-P1C-000 | 1.94 mm (0.076 in.) |
| 1.97 | 29420-P1C-000 | 1.97 mm (0.078 in.) |
| 2.00 | 29421-P1C-000 | 2.00 mm (0.079 in.) |
| 2.03 | 29422-P1C-000 | 2.03 mm (0.080 in.) |
| 2.06 | 29423-P1C-000 | 2.06 mm (0.081 in.) |
| 2.09 | 29424-P1C-000 | 2.09 mm (0.082 in.) |
| 2.12 | 29425-P1C-000 | 2.12 mm (0.083 in.) |
| 2.15 | 29426-P1C-000 | 2.15 mm (0.085 in.) |
| 2.18 | 29427-P1C-000 | 2.18 mm (0.086 in.) |
| 2.21 | 29428-P1C-000 | 2.21 mm (0.087 in.) |
| 2.24 | 29429-P1C-000 | 2.24 mm (0.088 in.) |

19. Remove the transfer cover (A), transfer hypoid drive gear/shaft assembly (B), 25 mm thrust shim (C), and tapered roller bearing (D) from the transfer housing (E) after adjusting the transfer gear backlash or transfer gear tooth contact.

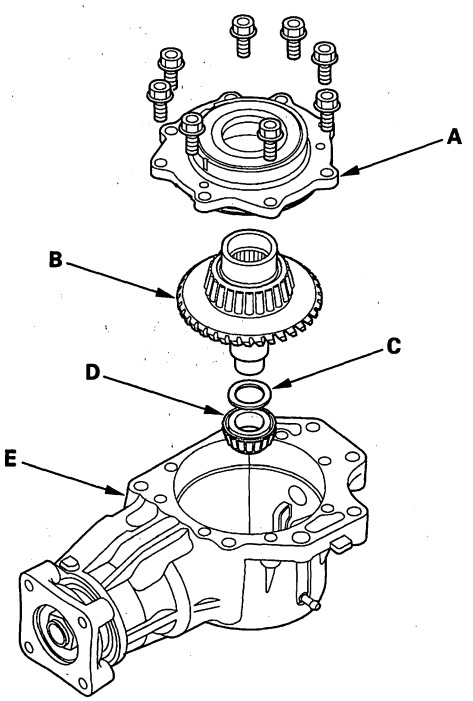


20. Secure the transfer housing (A) in a bench vise (B) with soft jaws, then install the companion flange holder on the companion flange. To prevent damage to the transfer housing, always use soft jaws or equivalent materials between the transfer housing and the vise.

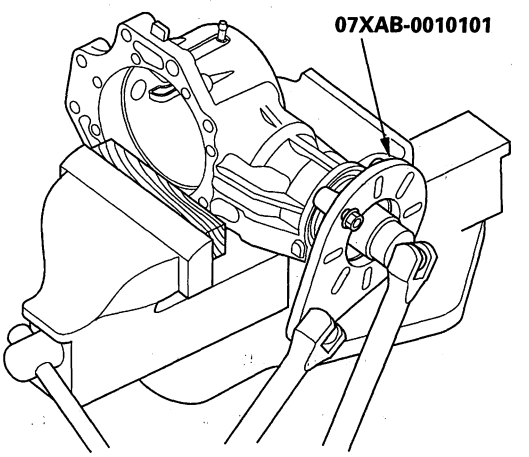


21. Remove the locknut (A), conical spring washer (B), and companion flange (C) from the transfer output shaft (hypoid gear) (D).

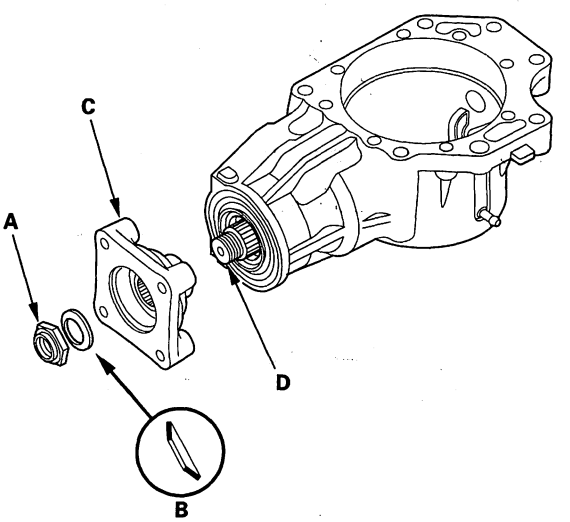


22. Remove the transfer output shaft (hypoid gear) from the transfer housing.



BACK

Protected by AR

23. Install the thrust washer (A) and the new transfer spacer (B) on the transfer output shaft (hypoid gear) (C) in the direction shown, and install them in the transfer housing (D).

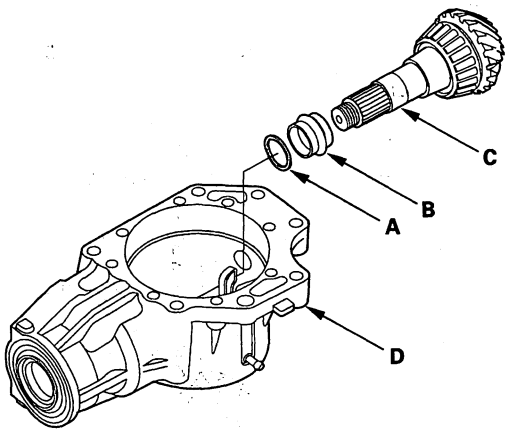


24. Coat the threads of the locknut and transfer output shaft (hypoid gear) with transfer fluid (hypoid gear oil).

25. Install the companion flange (A), new O-ring (B), back-up ring (C), new conical spring washer (D), and new locknut (E) on the transfer output shaft (hypoid gear) (F). Install the conical spring washer in the direction shown.

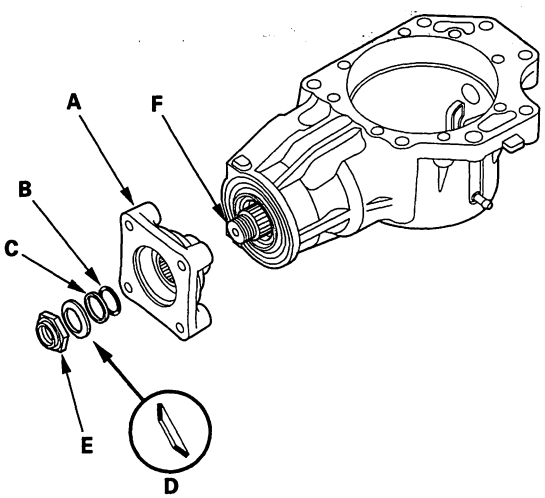


26. Secure the transfer housing (A) in a bench vise (B) with soft jaws, then install the companion flange holder on the companion flange. To prevent damage to the transfer housing, always use soft jaws or equivalent materials between the transfer housing and the vise.

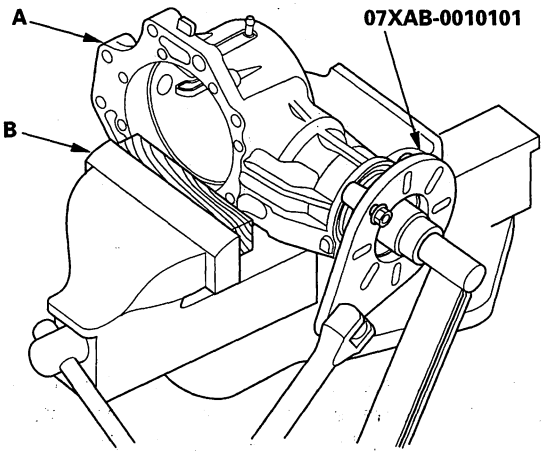


27. Tighten the locknut while measuring the starting torque of the transfer output shaft (hypoid gear) so the starting torque is within 1.15—1.71 N·m (11.7—17.4 kgf·cm, 10.2—15.1 lbf·in.).

**Tightening Torque:**
**108—294 N·m**
**(11.0—30.0 kgf·m, 79.6—217 lbf·ft)**
**Starting Torque:**
**1.15—1.71 N·m**
**(11.7—17.4 kgf·cm, 10.2—15.1 lbf·in.)**

NOTE:
- Rotate the companion flange several times to seat the tapered roller bearings, then measure the starting torque.
- If the starting torque exceeds 1.71 N·m (17.4 kgf·cm, 15.1 lbf·in.), replace the transfer spacer and reassemble the parts. Do not adjust the torque with the locknut loose.
- If the tightening torque exceeds 294 N·m (30.0 kgf·m, 217 lbf·ft), replace the transfer spacer and reassemble the parts.

28. Remove the companion flange holder.

(cont'd)

Protected by AR



## Reassembly (cont'd)

29. Stake the locknut to a depth (A) of 0.7—1.2 mm (0.03—0.05 in.) using a 3.5 mm punch (B).

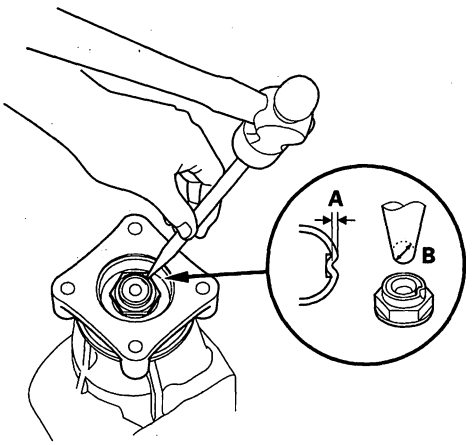


30. Install the tapered roller bearing (A), 25 mm thrust shim (B), and transfer hypoid drive gear/shaft assembly (C) in the transfer housing (D).

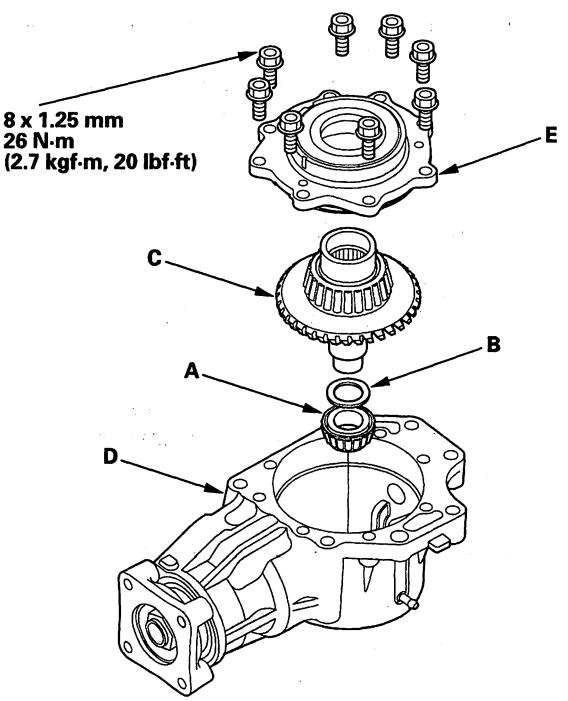


31. Temporally install the transfer cover (E) without the O-ring. Install and tighten the bolts.

32. Secure the transfer housing (A) in a bench vise (B) with soft jaws. To prevent damage to the transfer housing, always use soft jaws or equivalent materials between the transfer housing and the vise.

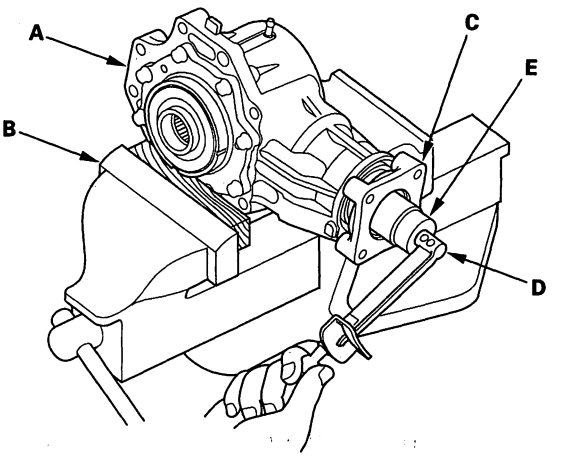


33. Rotate the transfer companion flange (C) several times to seat the tapered roller bearings.

34. Measure the starting torque at the companion flange using a torque wrench (D) and a socket (E).

**Total Starting Torque :**
**2.75—4.65 N·m**
**(28.0—47.4 kgf·cm, 24.3—41.1 lbf·in.)**



BACK

Protected by AR

35. Remove the transfer cover.

36. If the measurement is out of standard, remove the bearing outer race (A) and 80 mm thrust shim (B) from the transfer cover (C). If the bearing outer race is press-fitted, remove the bearing outer race by heating the cover to about 212 °F (100 °C) with a heat gun (D). Do not heat the cover more than 212 °F (100 °C).

    If the measurement is within the standard, go to step 41.

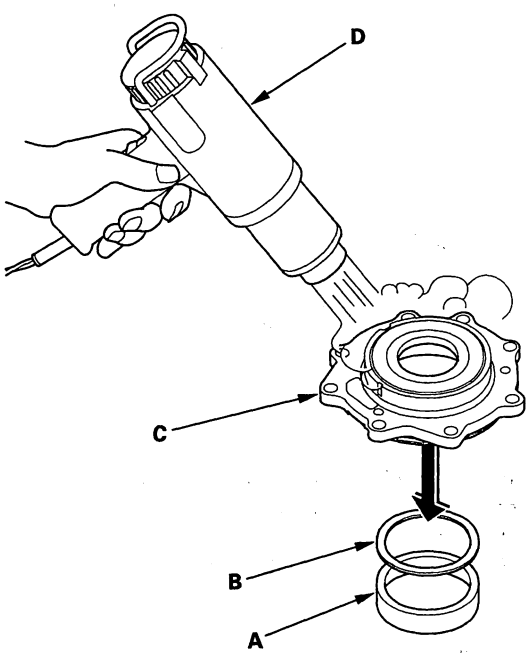


37. Measure the thickness of removed 80 mm thrust shim, and select the new 80 mm shim.

**THRUST SHIM, 80 mm**

| Shim No. | Part Number | Thickness |
|---|---|---|
| A | 41401-RDK-000 | 1.52 mm (0.060 in.) |
| B | 41402-RDK-000 | 1.55 mm (0.061 in.) |
| C | 41403-RDK-000 | 1.58 mm (0.062 in.) |
| D | 41404-RDK-000 | 1.61 mm (0.063 in.) |
| E | 41405-RDK-000 | 1.64 mm (0.065 in.) |
| F | 41406-RDK-000 | 1.67 mm (0.066 in.) |
| G | 41407-RDK-000 | 1.70 mm (0.067 in.) |
| H | 41408-RDK-000 | 1.73 mm (0.068 in.) |
| I | 41409-RDK-000 | 1.76 mm (0.069 in.) |
| J | 41410-RDK-000 | 1.79 mm (0.070 in.) |
| K | 41411-RDK-000 | 1.82 mm (0.072 in.) |
| L | 41412-RDK-000 | 1.85 mm (0.073 in.) |
| M | 41413-RDK-000 | 1.88 mm (0.074 in.) |
| N | 41414-RDK-000 | 1.91 mm (0.075 in.) |
| O | 41415-RDK-000 | 1.94 mm (0.076 in.) |
| P | 41416-RDK-000 | 1.97 mm (0.078 in.) |
| Q | 41417-RDK-000 | 2.00 mm (0.079 in.) |
| R | 41418-RDK-000 | 2.03 mm (0.080 in.) |
| S | 41419-RDK-000 | 2.06 mm (0.081 in.) |
| T | 41420-RDK-000 | 2.09 mm (0.082 in.) |
| U | 41421-RDK-000 | 2.12 mm (0.083 in.) |
| V | 41422-RDK-000 | 2.15 mm (0.085 in.) |
| W | 41423-RDK-000 | 2.18 mm (0.086 in.) |
| X | 41424-RDK-000 | 2.21 mm (0.087 in.) |
| Y | 41425-RDK-000 | 2.24 mm (0.088 in.) |
| Z | 41426-RDK-000 | 2.27 mm (0.089 in.) |
| AA | 41427-RDK-000 | 2.30 mm (0.091 in.) |
| AB | 41428-RDK-000 | 2.33 mm (0.092 in.) |
| AC | 41429-RDK-000 | 2.36 mm (0.093 in.) |
| AD | 41430-RDK-000 | 2.39 mm (0.094 in.) |
| AE | 41431-RDK-000 | 2.42 mm (0.095 in.) |
| AF | 41432-RDK-000 | 2.45 mm (0.096 in.) |
| AG | 41433-RDK-000 | 2.48 mm (0.098 in.) |
| AH | 41434-RDK-000 | 2.51 mm (0.099 in.) |
| AI | 41435-RDK-000 | 2.54 mm (0.100 in.) |
| AJ | 41436-RDK-000 | 2.57 mm (0.101 in.) |
| AK | 41437-RDK-000 | 2.60 mm (0.102 in.) |
| AL | 41438-RDK-000 | 2.63 mm (0.104 in.) |
| AM | 41439-RDK-000 | 2.66 mm (0.105 in.) |

(cont'd)

Protected by AR



## Reassembly (cont'd)

38. Install the 80 mm trust shim (A) and bearing outer race (B) in the transfer cover (C). If you heated the cover, let it cool to room temperature before installing the thrust shim.

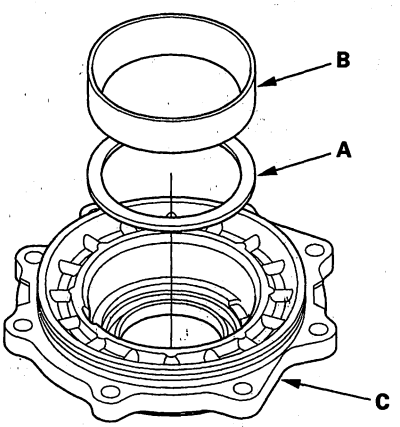


39. Drive the outer race securely in the cover using the driver and the attachment (72 x 80 mm) so there is no clearance between the outer race, thrust shim, and cover.

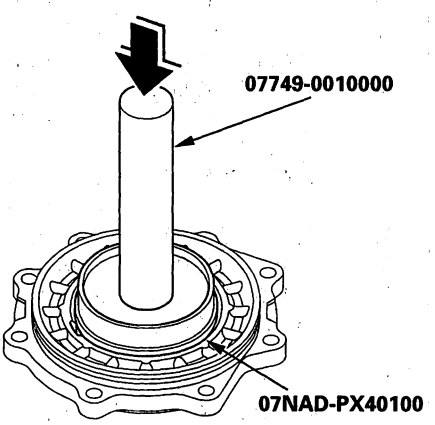


40. After replacing the 80 mm thrust shim, recheck and make sure that the total starting torque is within the specification.

41. Install the new O-ring (A) on the transfer cover (B), then install the cover on the transfer housing (C).

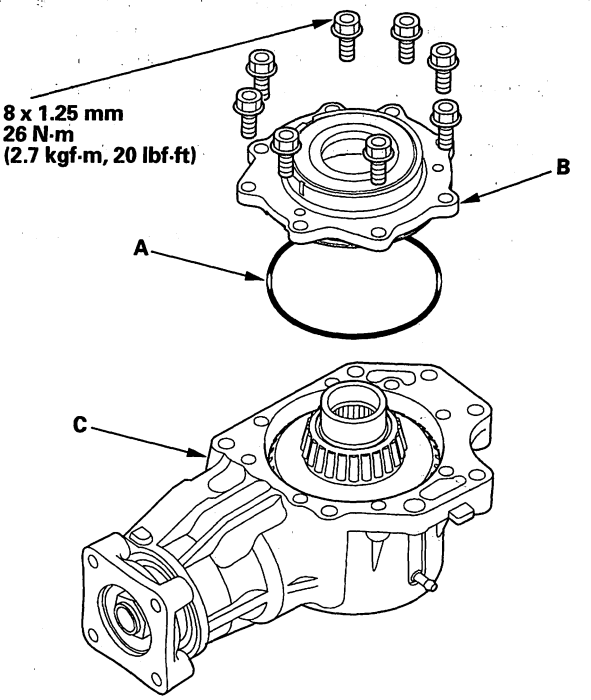


42. Remove the filler plug (A), then refill the transfer assembly with transfer fluid (hypoid gear oil). Use a SAE 90 or SAE 80W-90 viscosity hypoid gear oil, API classified GL4 or GL5 only.

**Viscosity**
**SAE 90:** **Above 0 °F (−18 °C)**
**SAE 80W-90:** **Below 0 °F (−18 °C)**

**Hypoid Gear Oil Capacity: 0.45 L (0.48 US qt)**

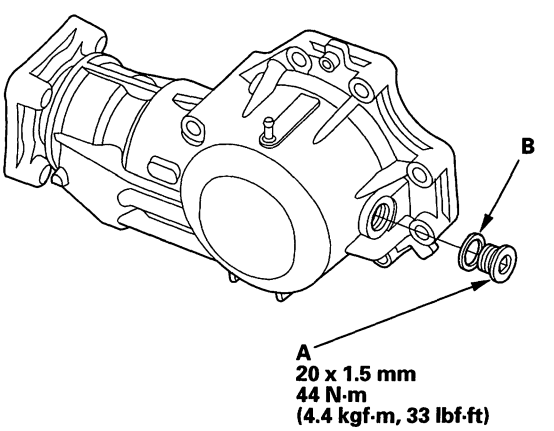


43. Install the filler plug with a new sealing washer (B).



BACK

Protected by AR

# Rear Differential

## Rear Differential


Special Tools ..... 15-2
Component Location Index ..... 15-3
General Troubleshooting Information ..... 15-4
DTC Troubleshooting Index ..... 15-8
Symptom Troubleshooting Index ..... 15-9
System Description ..... 15-10
Circuit Diagram ..... 15-20
DTC Troubleshooting ..... 15-22
Symptom Troubleshooting ..... 15-66
SH-AWD Function Test ..... 15-68
Rear Differential Fluid Inspection and Replacement ..... 15-69
Rear Differential Fluid Temperature Sensor Replacement ..... 15-70
SH-AWD Control Unit Replacement ..... 15-71
SH-AWD Relay Replacement ..... 15-71
Rear Differential Mount Replacement ..... 15-72
Rear Differential Removal ..... 15-73
Rear Differential Installation ..... 15-74
Rear Differential Disassembly/Reassembly ..... 15-76
Center Case Oil Seal Replacement ..... 15-77
Side Case Oil Seal Replacement ..... 15-85
Center Case Replacement ..... 15-86
Side Case Replacement ..... 15-88


BACK

Protected by AR

# Rear Differential

## Special Tools

| Ref. No. | Tool Number | Description | Qty |
|---|---|---|---|
| ① | 070AD-STK0110 | Oil Seal Driver A | 1 |
| ② | 070AD-STK0120 | Oil Seal Driver B | 1 |
| ③ | 070AD-STK0130 | Oil Seal Driver C | 1 |
| ④ | 070AJ-SJAA101 | Adapter, Torque Wrench | 1 |
| ⑤ | 07SAZ-001000A | Backprobe set | 2 |
| ⑥ | 07XAB-001A101 | Companion Flange Holder | 1 |
| ⑦ | 07AAD-S3VA000 | Driveshaft Remover | 1 |
| ⑧ | 07747-0010100 | Fork Seal Driver Weight | 1 |

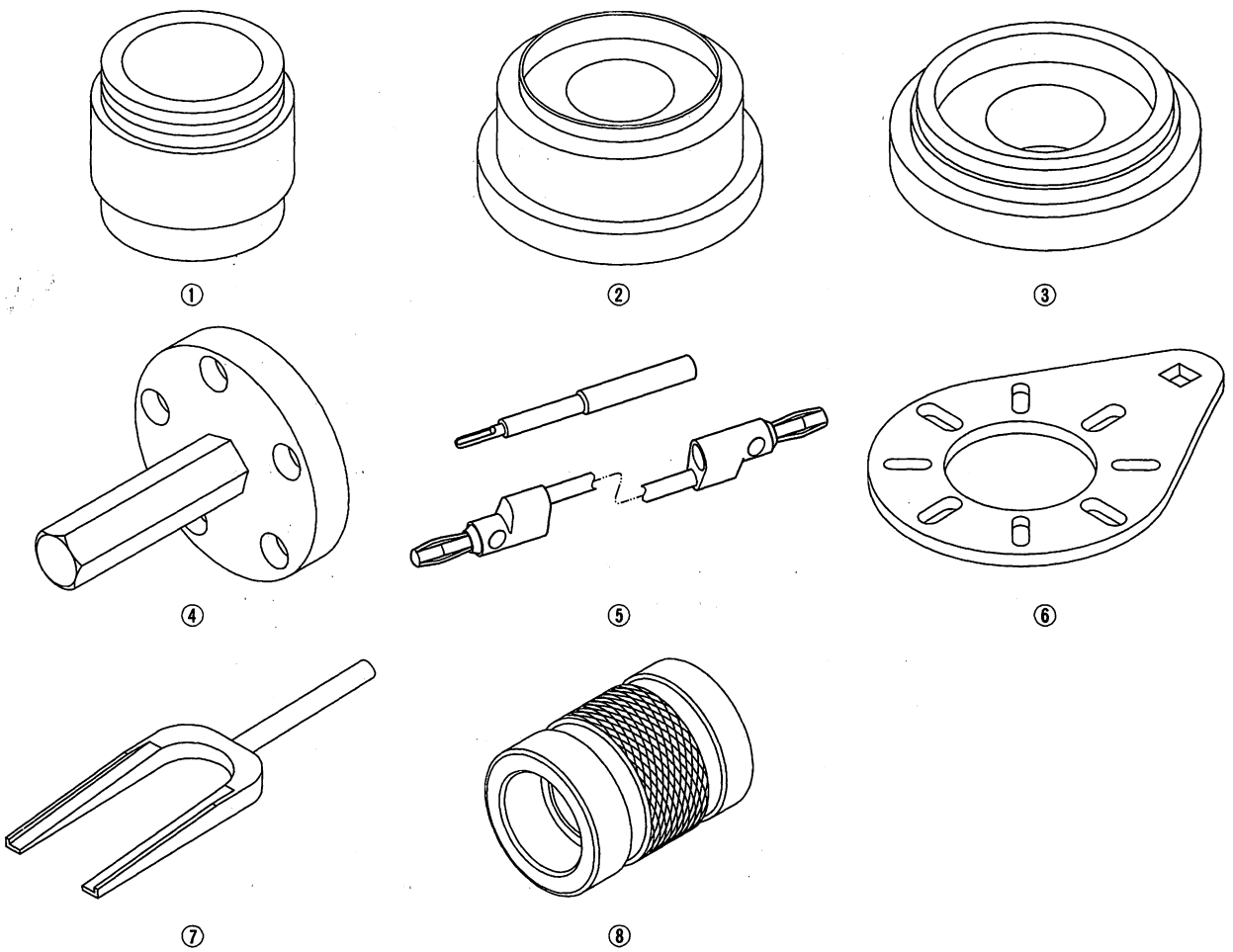




BACK

Protected by AR

## Component Location Index

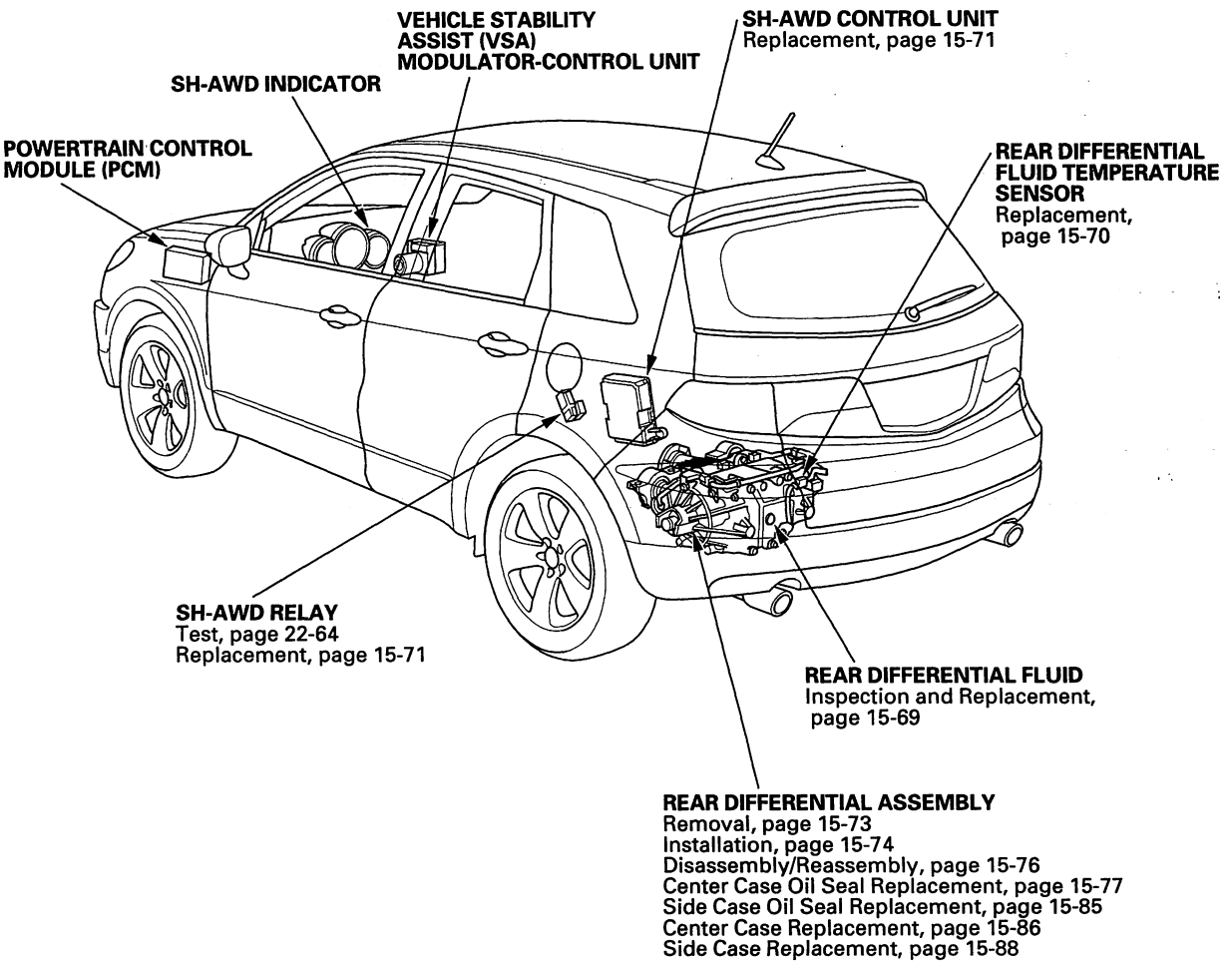


BACK

Protected by AR



## General Troubleshooting Information

### SH-AWD Indicator

The SH-AWD indicator comes on under certain conditions even if the AWD system is working normally. Here are some examples:

- When you use high-powered wireless equipment such as a CB or Ham radio in the vehicle.
- When you keep spinning the rear wheels while the vehicle is stuck in sand, mud, snow, etc.
- When the battery voltage suddenly drops below 10 volt.

After the SH-AWD indicator comes on, it stays on until you turn the ignition switch off.

### Diagnostic Trouble Code (DTC)

- The SH-AWD control unit can memorize up to eight different DTCs. The system displays the DTCs by blinking the SH-AWD indicator. Multiple DTCs are displayed in the order they occured, beginning with the most recent.
- If the same DTC is detected more than once, the most recent DTC is written over the earlier one. Therefore, when the same problem is detected more than once, it is memorized as a single DTC.
- The DTCs are memorized in the EEPROM (non-volatile memory). Therefore, the memorized DTCs are not cleared when the battery is disconnected or the SH-AWD control unit is disconnected.
- If there is a problem in the central processing unit (CPU) of the SH-AWD control unit, the SH-AWD indicator comes on, but no DTC is memorized.

### Self-diagnosis

When a problem is detected by self-diagnosis, the system does the following:

- Turns the SH-AWD indicator on.
- Memorizes the DTC.
- Stops AWD control and puts the vehicle back in FWD.
- Reduces engine torque to suit the driving conditions when the abnormality was detected.



BACK

Protected by AR

## How to Check for Diagnostic Trouble Codes (DTCs)

When the SH-AWD control unit senses an abnormality in the input or output systems, the SH-AWD indicator in the gauge assembly will usually come on, and the malfunction indicator lamp (MIL), the D5 indicator, and/or the ABS indicator may also come on.

1. With the ignition switch OFF, connect the HDS to the data link connector (DLC) (A) behind the driver's dashboard lower cover.

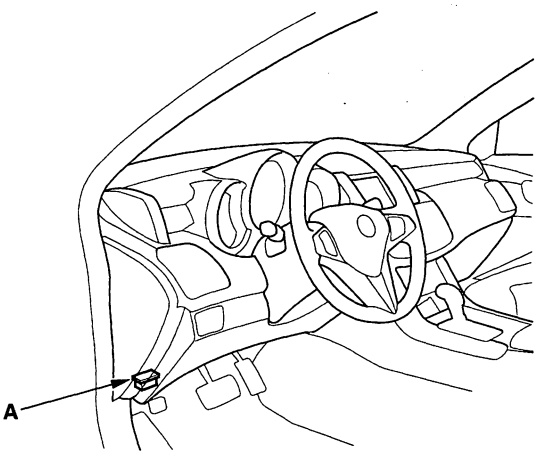


2. Turn the ignition switch ON (II), and follow the prompts on the HDS to display the DTC(s) on the screen. After determining the DTC(s), refer to the DTC Troubleshooting.

   NOTE: See the HDS help menu for specific instruction.

3. If there are fuel and emission DTCs, A/T DTCs, and VSA system DTC's at the same time, troubleshoot the fuel and emission DTCs first.

4. After recording the DTCs, clear all DTCs.

5. Test-drive the vehicle for several minutes in AWD mode, and check for DTCs. If the DTC returns, refer to the DTC Troubleshooting. If the DTC does not return, there was an intermittent problem within the circuit. Make sure all connectors and terminals in the circuit are tight.

## How to Troubleshoot Circuits at the SH-AWD Control Unit

**Special Tools Required**
Backprobe set 07SAZ-001000A (two required)

1. Remove the rear left side trim panel cover (A).

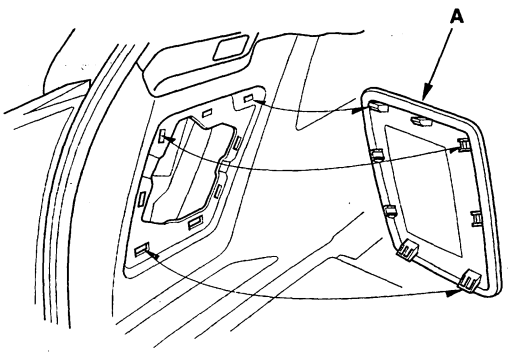


2. Loosen the SH-AWD control unit mounting bolts (A), then remove the SH-AWD control unit (B).

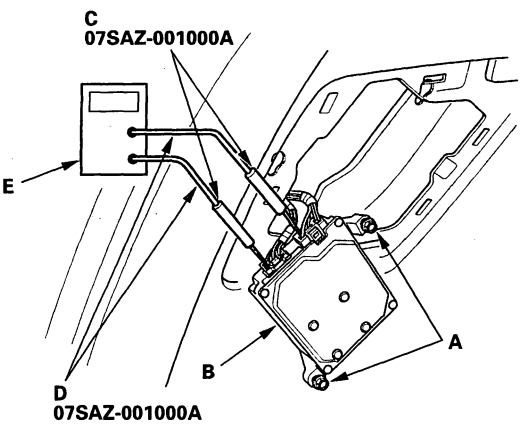


3. Inspect the circuit on the SH-AWD control unit according to the DTC Troubleshooting using the special tools and a digital multimeter or an analog circuit tester.

4. Connect the backprobe adapters (C) to the stacking patch cords (D), and connect the cords to the multimeter or an analog circuit tester (E). Using the wire insulator as a guide for the contoured-tip of the backprobe adapter, gently slide the tip into the connector from the wire side until it comes in contact with the terminal end of the wires.

(cont'd)

Protected by AR



## General Troubleshooting Information (cont'd)

### Updating the SH-AWD Control Unit

**Special Tools Required**
- Honda diagnostic system (HDS)
- Honda interface module (HIM)
- HDS pocket tester

NOTE:
- Use this procedure when you need to update the SH-AWD control unit in a troubleshooting procedure.
- Make sure the HDS/HIM has the latest software version.
- Before you update the SH-AWD control unit, make sure the battery in the vehicle is fully charged.
- Never turn the ignition switch OFF during the update. If there is a problem with the update, leave the ignition switch ON.
- To prevent SH-AWD control unit damage, do not operate anything electrical (headlights, audio system, brakes, A/C, power windows, moonroof (if equipped), door locks, etc.) during the update.
- To ensure the latest program is installed, do an SH-AWD control unit update whenever the SH-AWD control unit is substituted or replaced.
- You cannot update an SH-AWD control unit with a program it already has. It will only accept a new program.
- If you need to diagnose the Honda interface module (HIM) because the HIM's red (#3) lamp came on or was flashed during the update, leave the ignition switch in the ON (II) position when you disconnect the HIM from the data link connector (DLC). This will prevent SH-AWD control unit damage.

1. Select the update program, and follow the screen prompts to update the SH-AWD control unit.
2. If the software in the SH-AWD control unit is the latest, disconnect the HDS/HIM from the DLC, and go back to the procedure that you were doing. If the software in the SH-AWD control unit is not the latest, follow the instructions on the screen.
3. Do the SH-AWD control unit initialization.
4. Do the SH-AWD differential clutch torque memorization.
5. Do the yaw rate-lateral acceleration neutral position memorization.



BACK

Protected by AR

## SH-AWD Differential Clutch Torque Memorization

Whenever the right or left clutch side case is replaced, the differential clutch torque memorization must be done.

1. With the ignition switch OFF, connect the HDS to the 16P DLC (A) behind the driver's dashboard lower cover.

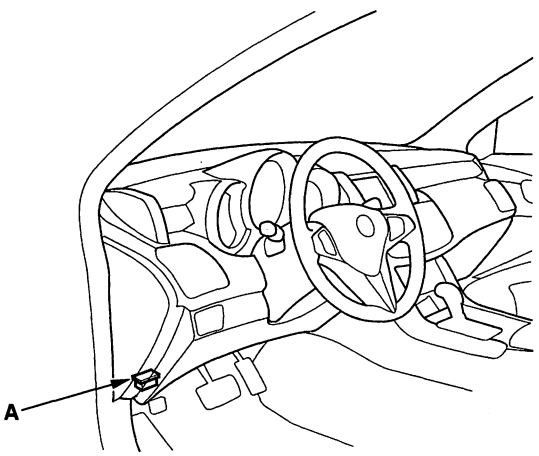


2. Turn the ignition switch ON (II), and follow the prompts on the HDS screen.

   NOTE: See the HDS help menu for specific instructions.

## Yaw Rate-Lateral Acceleration Neutral Position Memorization

Whenever the yaw rate sensor or the lateral acceleration sensor is replaced, its neutral position memorization must be done.

1. With the ignition switch OFF, connect the HDS to the 16P DLC (A) behind the driver's dashboard lower cover.

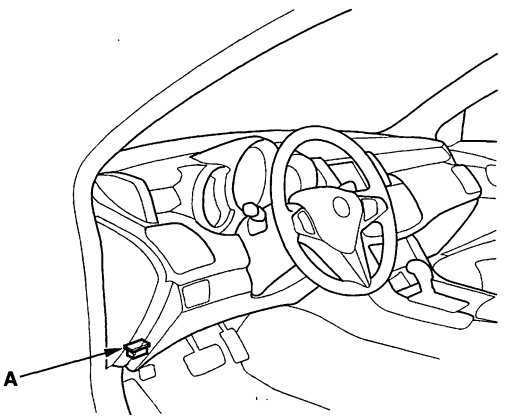


2. Turn the ignition switch ON (II), and follow the prompts on the HDS screen.

   NOTE: See the HDS help menu for specific instructions.

## SH-AWD Control Unit Initialization

Whenever the SH-AWD control unit is replaced, it must initialized.

1. With the ignition switch OFF, connect the HDS to the 16P DLC (A) behind the driver's dashboard lower cover.

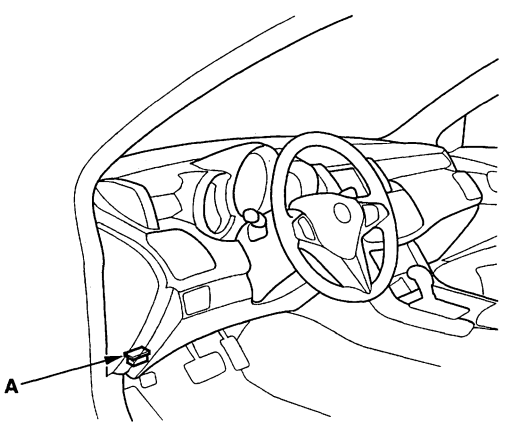


2. Turn the ignition switch ON (II), and follow the prompts on the HDS screen.

   NOTE: See the HDS help menu for specific instructions.

Protected by AR



## DTC Troubleshooting Index

| DTC* | SH-AWD Indicator Light | Detection Item | Page |
|---|---|---|---|
| 12-1 | ON | Lateral Acceleration Sensor Malfunction | (see page 15-22) |
| 12-2 | ON | Lateral Acceleration Sensor Malfunction | (see page 15-22) |
| 12-3 | ON | Lateral Acceleration Sensor Malfunction | (see page 15-22) |
| 16-3 | ON | Steering Angle Sensor Neutral Position Incorrect | (see page 15-22) |
| 33-2 | ON | Yaw Rate Sensor Malfunction | (see page 15-23) |
| 33-3 | ON | Yaw Rate Sensor Malfunction | (see page 15-23) |
| 41-1 | ON | Lost of Communication with PCM | (see page 15-24) |
| 41-2 | ON | Lost of Communication with VSA Modulator-Control Unit | (see page 15-25) |
| 41-4 | ON | Lost of Communication with A/T Control Unit | (see page 15-27) |
| 41-5 | ON | Lost of Communication with Yaw Rate-Lateral Acceleration Sensor | (see page 15-28) |
| 41-6 | ON | Lost of Communication with Steering Angle Sensor | (see page 15-30) |
| 42-1 | ON | Differential Fluid Temperature Sensor (Short to Power) | (see page 15-31) |
| 42-2 | ON | Differential Fluid Temperature Sensor (Open/GND Short) | (see page 15-32) |
| 43-1 | ON | Differential Fluid Temperature Sensor Malfunction | (see page 15-35) |
| 44-11 | ON | SH-AWD Control Unit | (see page 15-36) |
| 44-12 | ON | SH-AWD Relay Stuck ON | (see page 15-37) |
| 44-32 | ON | SH-AWD Control Unit Power Supply Stuck ON | (see page 15-38) |
| 44-41 | ON | SH-AWD Control Unit Power Supply Stuck OFF | (see page 15-38) |
| 44-50 | ON | SH-AWD Control Unit Power Supply Voltage Low | (see page 15-39) |
| 49-1 | ON | SH-AWD Control Unit (PG Line Open) | (see page 15-41) |
| 52-3 | ON | Left Clutch Electromagnetic Coil Current Malfunction | (see page 15-42) |
| 53-1 | ON | Left Clutch Electromagnetic Coil Malfunction | (see page 15-45) |
| 53-2 | ON | Left Clutch Electromagnetic Coil (Short) | (see page 15-47) |
| 53-3 | ON | Left Clutch Electromagnetic Coil Malfunction | (see page 15-45) |
| 56-3 | ON | Right Clutch Electromagnetic Coil Current Malfunction | (see page 15-49) |
| 57-1 | ON | Right Clutch Electromagnetic Coil Malfunction | (see page 15-52) |
| 57-2 | ON | Right Clutch Electromagnetic Coil (Short) | (see page 15-54) |
| 57-3 | ON | Right Clutch Electromagnetic Coil Malfunction | (see page 15-52) |
| 76-1 | ON | Rear Differential Fluid Overheats | (see page 15-56) |
| 77-1 | ON | Communication Error with the Power Control Module | (see page 15-57) |
| 77-2 | ON | Communication Error with the VSA Modulator-Control Unit | (see page 15-57) |
| 77-4 | ON | Communication Error with the Automatic-Transmission Control Unit | (see page 15-58) |
| 77-5 | ON | Yaw Rate-Lateral Acceleration Sensor Malfunction | (see page 15-59) |
| 77-6 | ON | Steering Angle Sensor Malfunction | (see page 15-59) |
| 78-xx | ON | SH-AWD Control Unit Self-diagnostic Malfunction | (see page 15-60) |
| 81-1 | ON | Left Search Coil Sensor Malfunction | (see page 15-60) |
| 82-1 | ON | Right Search Coil Sensor Malfunction | (see page 15-63) |
| 91-1 | ON | SH-AWD Control Unit Programming Error | (see page 15-65) |

*: DTCs are indicated by the SH-AWD indicator when the 16P data link connector (DLC) is connected to the HDS.



BACK

Protected by AR

## Symptom Troubleshooting Index

NOTE: Most problems in the unit are to be diagnosed by identifying noises from the gears or bearings. Care should be taken during diagnosis not to confuse differential noises with those from other drivetrain components.

| Symptom | Diagnostic Procedure | Also check for |
|---|---|---|
| The SH-AWD indicator does not go off, and no DTCs are stored | Symptom troubleshooting (see page 15-66). | |
| The SH-AWD indicator does not come on | Symptom troubleshooting (see page 15-67). | |
| Gear or bearing noises | • Fluid level too low.<br>• Incorrect or worn out fluid.<br>• Damaged or chipped gears.<br>• Incorrect side case clearance.<br>• Incorrect tire size (rolling circumference). | • Add fluid<br>• Drain and fill the differential<br>• Replace the differential carrier assembly<br>• Side case clearance adjustment |
| Rear differential overheats | • Fluid level too low.<br>• Incorrect fluid type.<br>• Incorrect tire size (rolling circumference). | • Add fluid<br>• Drain and fill the differential |
| Rear differential leaks fluid | • Fluid level too high.<br>• Clogged breather hose.<br>• Worn or damaged oil seal.<br>• Damaged sealing washer.<br>• Loose mounting bolts or inadequate sealing. | • lower to proper level<br>• Clean or replace<br>• Replace the oil seal<br>• Replace the sealing washer<br>• Recheck torque or apply sealant |
| Rear differential screeches, whines, moans, or squeaks | • Fluid level too low.<br>• Incorrect or worn out fluid.<br>• Incorrect tire rolling circumference.<br>• Damaged oil pump. | • Add fluid<br>• Drain and fill the differential<br>• Adjust tire pressure or replace tires<br>• Replace the differential carrier assembly |
| Noise during acceleration, or when accelerating from a full stop | • Incorrect side case clearance.<br>• Incorrect pre-load.<br>• Incorrect of backlash of hypoid gear.<br>• Damaged or chipped gears.<br>• Incorrect tire size (rolling circumference). | • Side case clearance adjustment<br>• Pre-load adjustment<br>• Replace the differential carrier assembly<br>• Replace the differential carrier assembly |
| HDS does not communicate with the SH-AWD control unit or the vehicle | Troubleshooting the DLC circuit (see page 11-229). | |

BACK

Protected by AR

# Rear Differential

## System Description

### SH-AWD System

**Outline**
This vehicle is equipped with a Super Handling All-wheel Drive (SH-AWD) rear differential system. This system uses electromagnetic clutches and the SH-AWD control unit to control front to rear torque distribution and independent left to right rear torque distribution. This allows the system to function as a limited slip differential and as a torque distribution system to improve standing start performance, straight-line stability, climbing, and cornering ability.

SH-AWD features include
- Independent torque distribution to the front and rear wheels, and to the left and right wheels for neutral handling when cornering.
- Controls differential (inside/outside) wheel speed in a turn to increase cornering stability.
- Limited slip differential function for better acceleration.

**Operation**
In a normal turn the radius of the front wheels is shorter than the radius that the rear wheels travel. If the front and rear wheels are driven at the same speed, full power is not transmitted. The SH-AWD system monitors the speed of the front wheels and increases the speed of the outside rear wheel proportionally around the larger radius. This improves stability and steering response. On slippery surfaces this provides the improved traction of a 4-wheel drive system.

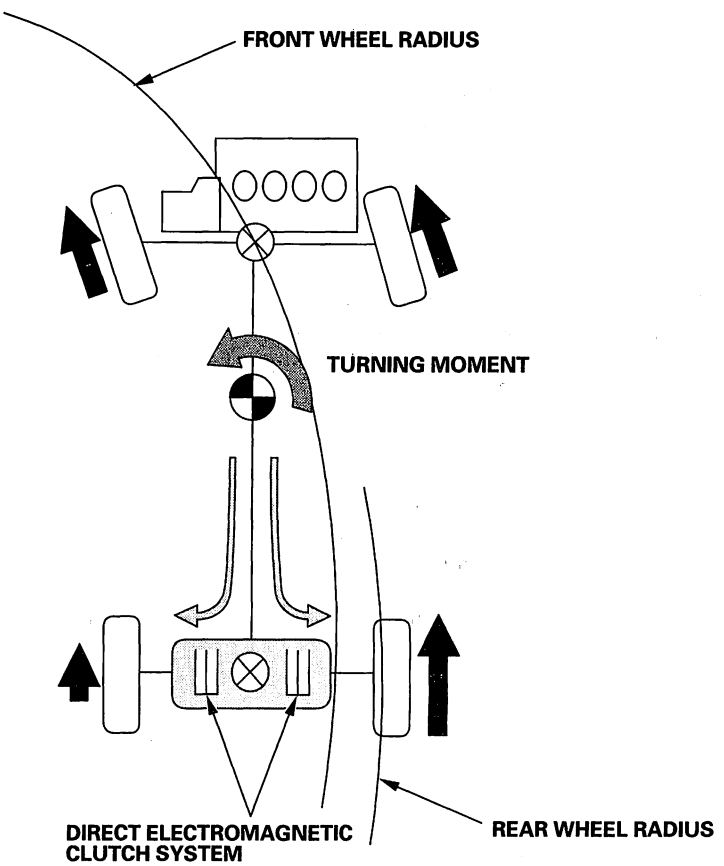




BACK

Protected by AR

**Construction**

1. The differential assembly has a conventional hypoid ring and pinion gear set.

2. The direct electromagnetic clutch system consists of the coils, the planetary gear sets, and the multi-plate clutches that are installed in the side cases on either side of the differential carrier. When driving straight ahead, both rear wheels rotate at the same speed. When turning, current is applied to the appropriate outside wheel main coil to *engage the* clutch. The amount of current passed through the electromagnetic clutch controls the amount of driving force to the outside wheel.

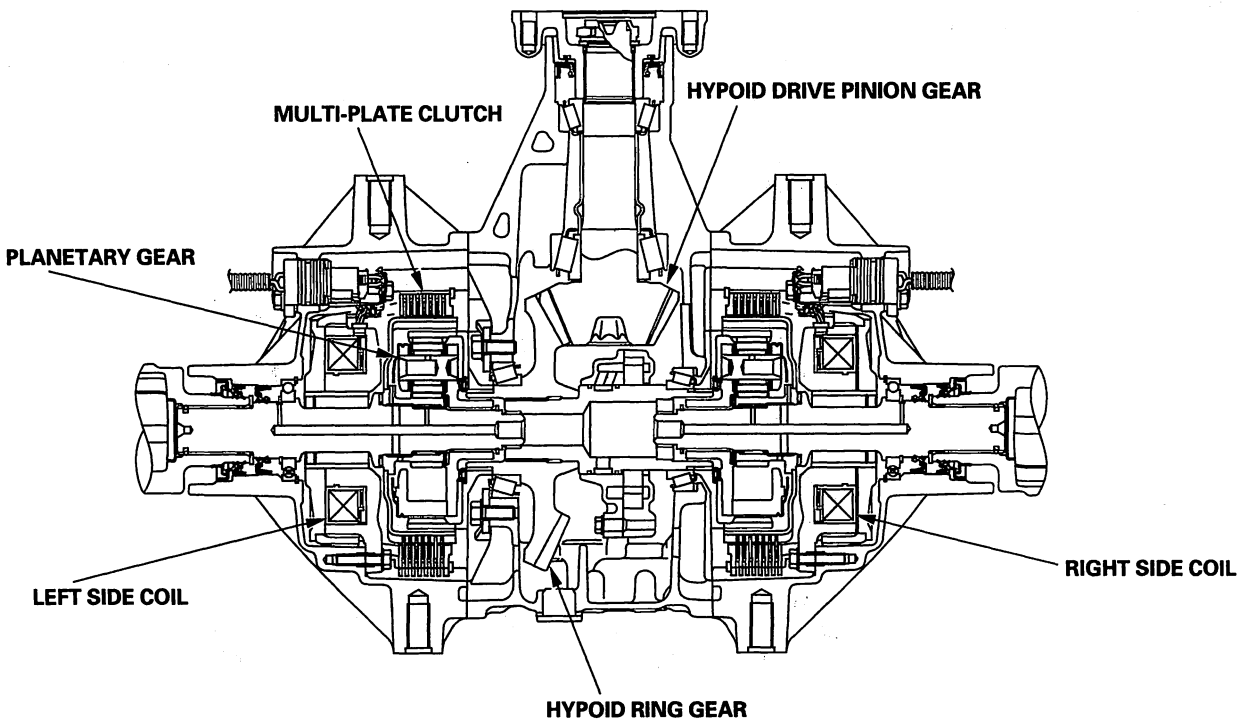


(cont'd)

Protected by AR



## System Description (cont'd)

### SH-AWD 4WD Control System

**Control System**
The SH-AWD control system consists of a SH-AWD control unit, the PCM, the VSA modulator-control unit, along with various sensors and switches that detect the steering angle, the lateral G force, the yaw, and the vehicle speed. A fluid temperature sensor is located on in the rear differential. The control units exchange information via the CAN communication lines. The SH-AWD control unit has a self-diagnostic function. If a malfunction is detected, the SH-AWD control unit turns on the SH-AWD indicator in the gauge assembly and the system goes into fail-safe mode. When in fail-safe mode, the vehicle disables the SH-AWD differential. The vehicle defaults to front wheel drive, reduces engine torque to suit the driving conditions.

**Driving Force Control**
The driving force control distributes the power based on the driver's inputs. It distributes torque to the front and rear wheels based on the throttle opening and the available engine torque output. When turning, torque is applied to the rear wheels independently based on the lateral G input and the direction of the turn. This generates an inward yaw movement to help steer the vehicle around the turn.

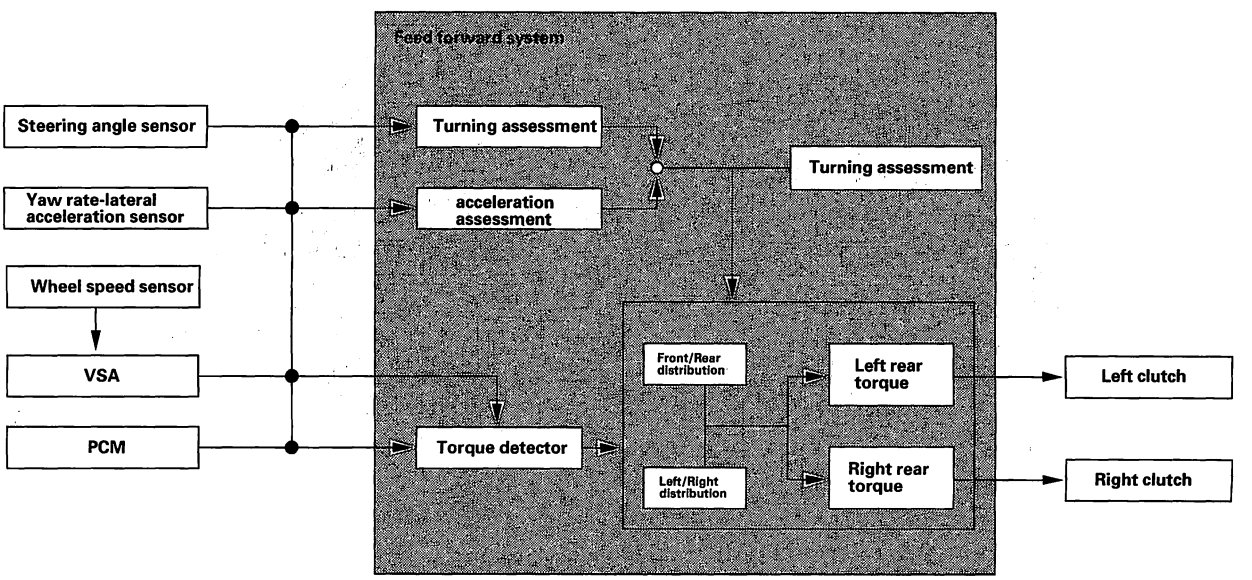




BACK

Protected by AR

## Electromagnetic Clutch System

**Construction**

The electromagnetic clutch system is incorporated into the side case assemblies on both sides of the differential case. The system consists of the multi-plate clutches, the planetary gears, the pressure guides, the solenoid coil assembly (the search coil and the main coil), the armature assembly (the slider and the armature), and the yoke.

| Components | Purpose |
|---|---|
| Multi-plate clutches | Convert thrust into torque, absorb wheel speed differences |
| Planetary gears | Magnify and convey clutch torque |
| Pressure guides | Reduce fluctuations in pressure |
| Search coils | Detect magnetic flux |
| Main coils | Generates magnetic fields |
| Slider | Centers the armature |
| Armature | Generates magnetic flux to generate thrust |
| Yoke | Generates magnetic flux to clamping force |

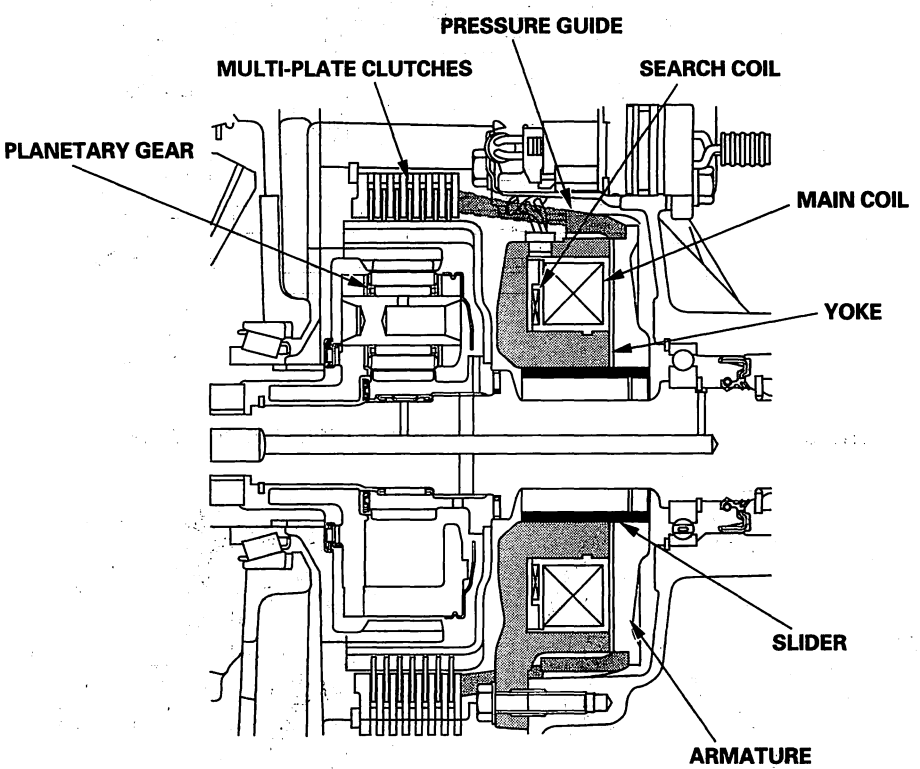


(cont'd)

Protected by AR



## System Description (cont'd)

**Operation**

The SH-AWD control unit receives inputs from the PCM and the VSA modulator-control unit on the driving conditions via the CAN. The SH-AWD control unit sends signals to the main coils, which engage the electromagnetic clutches that connect the planetary gear set. This increases the torque applied to the rear wheels. The amount of current sent to the clutch is continuously varied as driving conditions change.

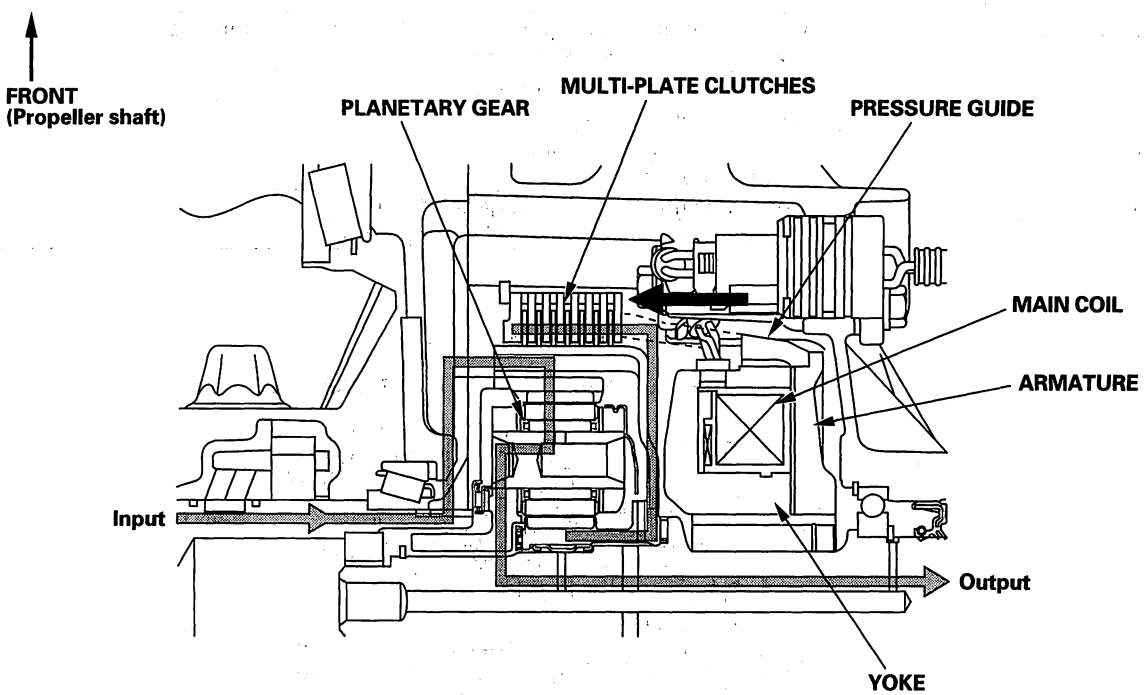


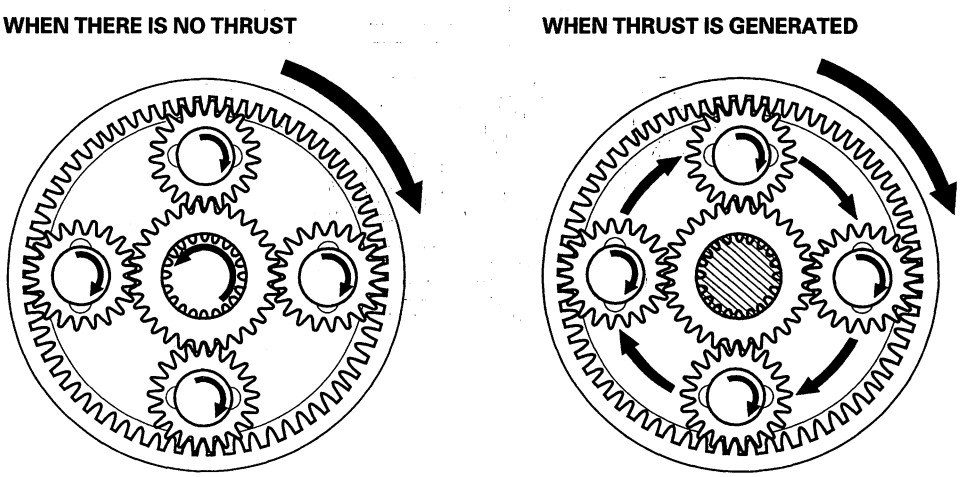




BACK

Protected by AR

## Search Coil Detection System

As the clutch disks wear, the air gap between the pressure guides and the multi-plate clutches increases. The increase in air gap changes the magnetic field generated by the main coil and the yoke. The search coil detects these changes in the magnetic field. The SH-AWD control unit uses predetermined maps to compensate for the changes to maintain precise control and smooth clutch engagement.

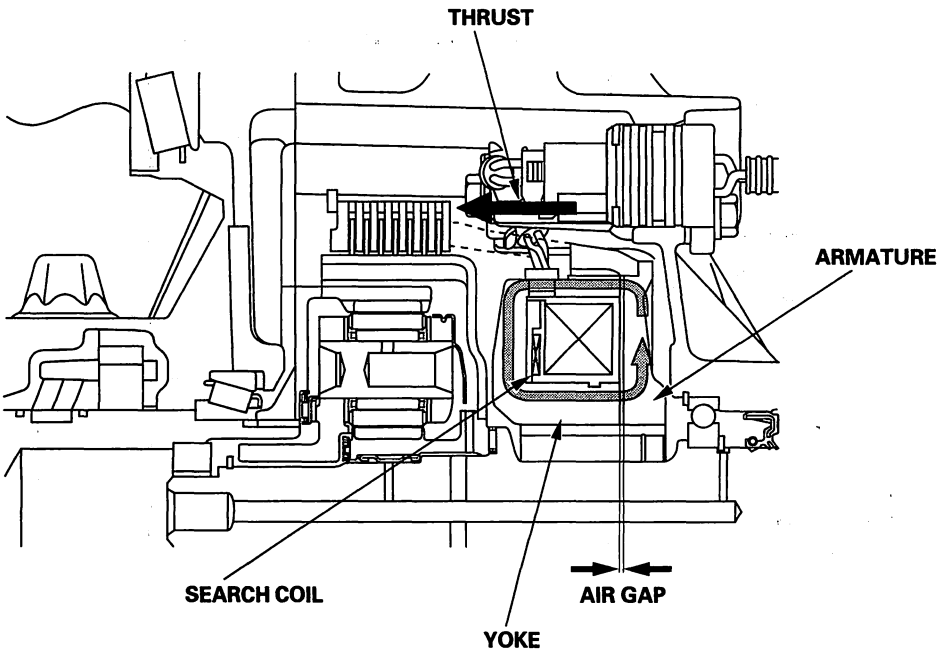


(cont'd)

Protected by AR



## System Description (cont'd)

### Electric Control System

#### SH-AWD Control Unit Electrical Connections

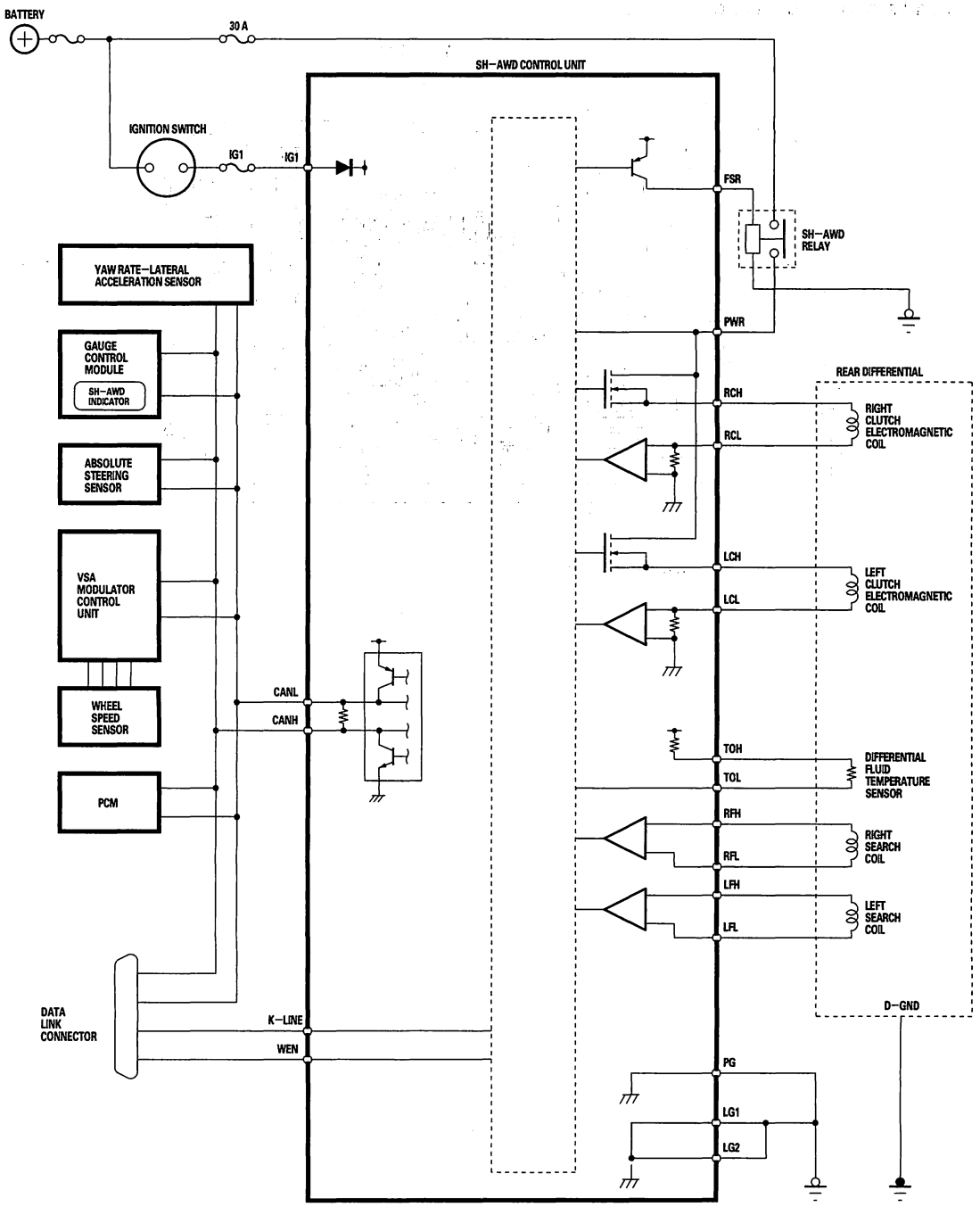




BACK

Protected by AR

## SH-AWD Control Unit Inputs and Outputs

The SH-AWD control unit terminal voltages and the measuring conditions for the SH-AWD control system.

**SH-AWD Control Unit Connector Terminal Locations**

**A (20P)**

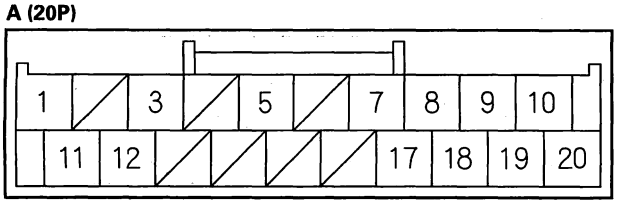


Terminal side of male terminals

| Terminal number | Wire color | Signal | Description | Measuring Conditions/Terminal Voltage |
|---|---|---|---|---|
| A1 | LT GRN | LFH | Detects left search coil signal (positive) | With ignition switch ON (II): about 2.5 V |
| A3 | GRN | RFH | Detects right search coil signal (positive) | With ignition switch ON (II): about 2.5 V |
| A5 | LT BLU | K-LINE | Communication line SH-AWD control unit-to-DLC | With ignition switch ON (II): 0 V or battery voltage |
| A7 | LT GRN | IG1 | Power supply for SH-AWD control unit | With ignition switch ON (II): battery voltage |
| A8 | WHT | TOL | Detects differential fluid temperature sensor (negative) | With ignition switch ON (II): about 0.2 V to 4.7 V (Depending on ATF temperature) |
| A9 | BLK | LG1 | Unit ground | With ignition switch ON (II): 0 V |
| A10 | WHT | CANH | CAN communication signal | With ignition switch ON (II): about 2.5 V or 3.5 V |
| A11 | YEL | LFL | Detects left search coil signal (negative) | With ignition switch ON (II): about 2.5 V |
| A12 | RED | RFL | Detects right search coil signal (negative) | With ignition switch ON (II): about 2.5 V |
| A17 | ORN | FSR | Drives SH-AWD relay | With ignition switch ON (II): 0 V or battery voltage |
| A18 | GRY | TOH | Power supply for differential fluid temperature sensor | With ignition switch ON (II): about 4.7 V to 5 V |
| A19 | YEL | WEN | Detects write enable signal | With ignition switch ON (II): about 0 V |
| A20 | RED | CANL | CAN communication signal | With ignition switch ON (II): about 2.5 V or 1.5 V |

(cont'd)

BACK

Protected by AR



## System Description (cont'd)

### SH-AWD Control Unit Inputs and Outputs

The SH-AWD control unit terminal voltages and the measuring conditions for the SH-AWD control system.

**SH-AWD Control Unit Connector Terminal Locations**

**B (8P)**

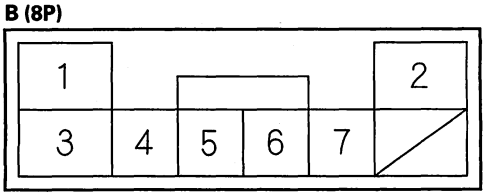


Terminal side of male terminals

| Terminal number | Wire color | Signal | Description | Measuring Conditions/Terminal Voltage |
|---|---|---|---|---|
| B1 | PUR | PWR | Power supply for SH-AWD actuator | With engine running: battery voltage |
| B2 | BLK | PG | Actuator ground | With ignition switch ON (II): 0 V |
| B3 | BLK | LG2 | Unit ground | With ignition switch ON (II): 0 V |
| B4 | GRN | LCH | Drives left clutch electromagnetic coil (positive) | With clutch off: 0 V<br>With clutch on: battery voltage |
| B5 | BLU | LCL | Drives left clutch electromagnetic coil (negative) | With ignition switch ON (II): 0 V |
| B6 | WHT | RCH | Drives right clutch electromagnetic coil (positive) | With clutch off: 0 V<br>With clutch on: battery voltage |
| B7 | YEL | RCL | Drives left clutch electromagnetic coil (negative) | With ignition switch ON (II): 0 V |



BACK

Protected by AR

Protected by AR

# Rear Differential

## Circuit Diagram

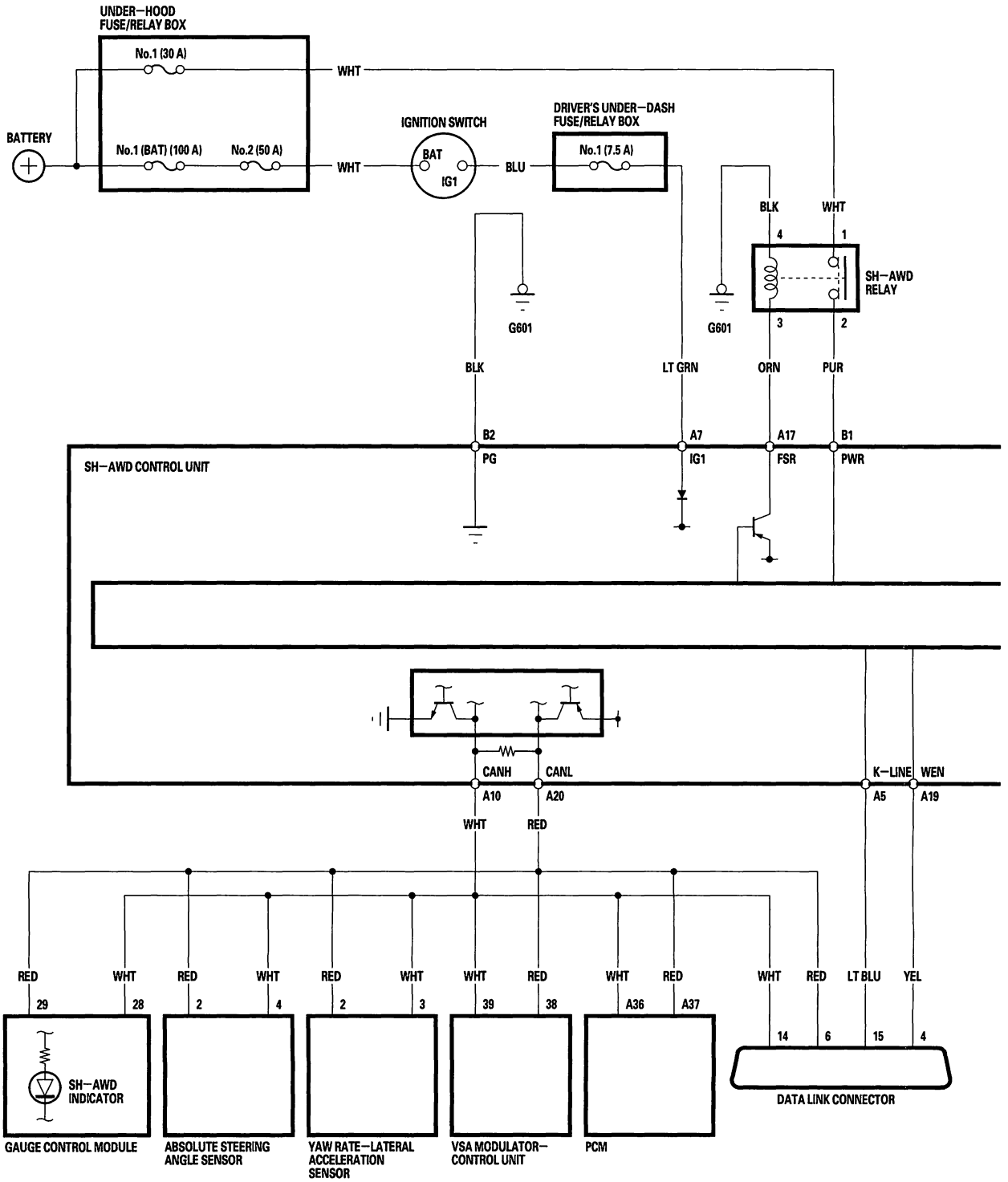




BACK

Protected by AR

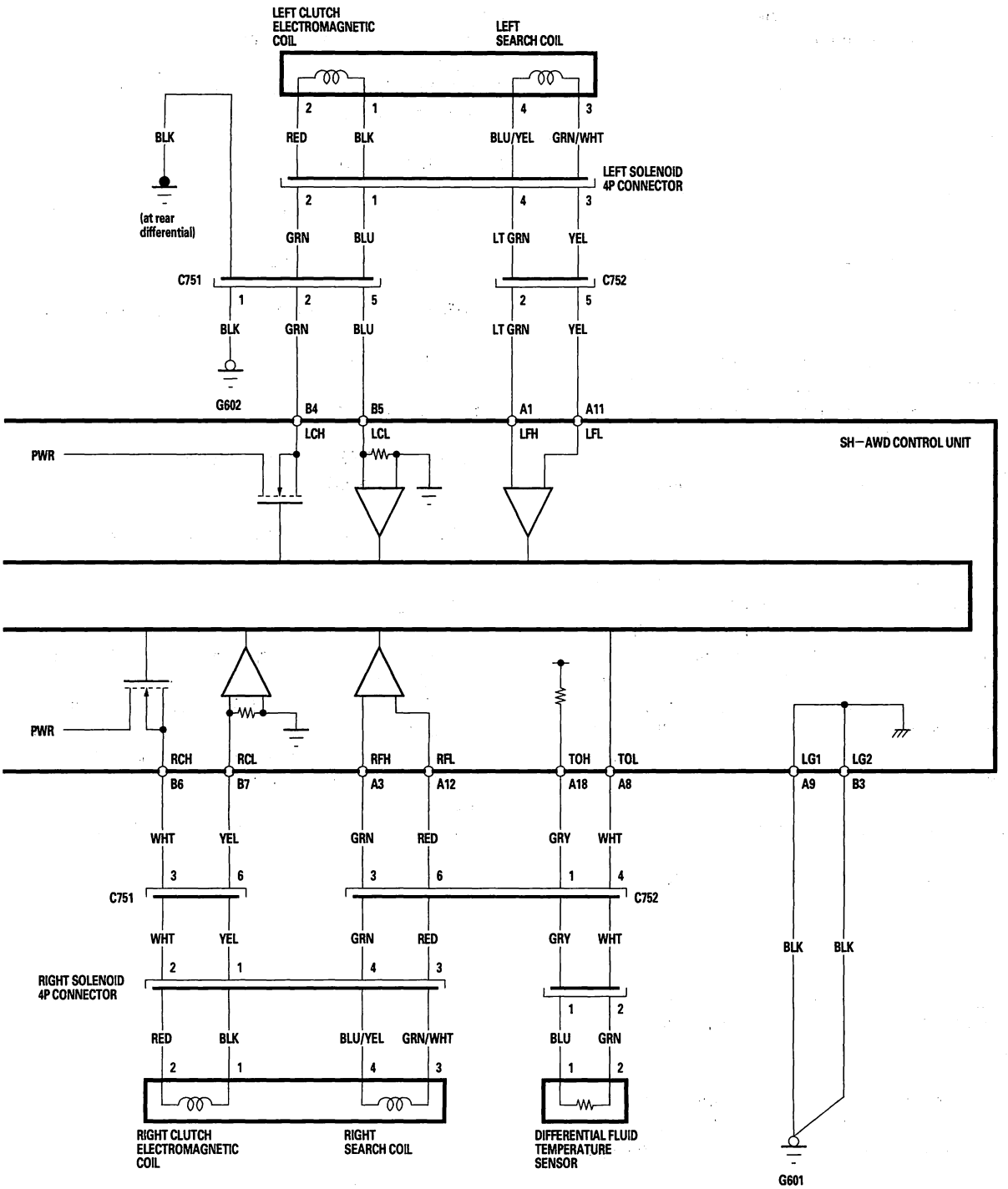


BACK

Protected by AR



## DTC Troubleshooting

### DTC 12-1, 12-2, 12-3: Lateral Acceleration Sensor Malfunction

NOTE: Before you troubleshoot, review the general troubleshooting information (see page 15-4).

1. Turn the ignition switch ON (II).

2. Check for DTCs in the VSA system with the HDS.

   *Are any Lateral Acceleration sensor DTCs indicated?*

   **YES**—Go to the indicated DTC's troubleshooting. ■

   **NO**—Go to step 3.

3. Test-drive the vehicle with an assistant in a left and right zig-zag pattern at about 13 mph (20 km/h) and check the LATERAL ACCELERATION SENSOR in the DATA LIST with the HDS.

   *Does the sensor value change when turning?*

   **YES**—Go to step 4.

   **NO**—Update the SH-AWD control unit if it does not have the latest software (see page 15-6), or substitute a known-good SH-AWD control unit and recheck (see page 15-71). If the symptom/indication goes away with the updated SH-AWD control unit, troubleshooting is complete. If the symptom/indication goes away with a known-good SH-AWD control unit, replace the original SH-AWD control unit (see page 15-71). ■

4. Park the vehicle on a level surface.

5. Check the LATERAL ACCELERATION SENSOR in the DATA LIST with the HDS.

   *Is there 0.1 G or less?*

   **YES**—Intermittent failure, the system is OK at this time. If the DTC returns, replace the SH-AWD control unit (see page 15-71). ■

   **NO**—Do the Yaw rate-lateral acceleration neutral position memorization (see page 15-7). If the DTC returns, replace the SH-AWD control unit (see page 15-71). ■

### DTC 16-3: Steering Angle Sensor Neutral Position Incorrect

NOTE:
- Before you troubleshoot, review the general troubleshooting information (see page 15-4).
- Check the wheel alignment (see page 18-5).
- Check for installation of the steering angle sensor.

1. Turn the ignition switch ON (II).

2. Check for DTCs in the VSA system with the HDS.

   *Are any steering angle sensor DTCs indicated?*

   **YES**—Go to the indicated DTC's troubleshooting. ■

   **NO**—Go to step 3.

3. Start the engine.

4. Check the STEERING ANGLE SENSOR in the DATA LIST with the HDS.

   *When the steering wheels is turned slowly, does the value change?*

   **YES**—Go to step 5.

   **NO**—Update the SH-AWD control unit if it does not have the latest software (see page 15-6), or substitute a known-good SH-AWD control unit and recheck (see page 15-71). If the symptom/indication goes away with the updated SH-AWD control unit, troubleshooting is complete. If the symptom/indication goes away with a known-good SH-AWD control unit, replace the original SH-AWD control unit (see page 15-71). ■



BACK

Protected by AR

5. Test-drive the vehicle in a straight line at 19 mph (30 km/h) or more.

6. Park the vehicle on a level surface, and center the steering wheel.

7. Check the STEERING ANGLE SENSOR in the DATA LIST with the HDS.

   *It is within ±25 deg of center?*

   **YES**—Intermittent failure, the system is OK at this time. If the DTC returns, replace the SH-AWD control unit (see page 15-71).■

   **NO**—Do the steering angle neutral position memorization (see page 19-135). If the DTC returns, replace the SH-AWD control unit (see page 15-71). ■

## DTC 33-2, 33-3: Yaw Rate Sensor Malfunction

NOTE: Before you troubleshoot, review the general troubleshooting information (see page 15-4).

1. Turn the ignition switch ON (II).

2. Check for DTCs in the VSA system with the HDS.

   *Are any YAW rate sensor DTCs indicated?*

   **YES**—Go to the indicated DTC's troubleshooting.■

   **NO**—Go to step 3.

3. Test-drive the vehicle with an assistant in a left and right zig-zag pattern at about 13 mph (20 km/h) and check the YAW RATE SENSOR in the DATA LIST with the HDS.

   *Does the sensor value change when turning?*

   **YES**—Go to step 4.

   **NO**—Update the SH-AWD control unit if it does not have the latest software (see page 15-6), or substitute a known-good SH-AWD control unit and recheck (see page 15-71). If the symptom/indication goes away with the updated SH-AWD control unit, troubleshooting is complete. If the symptom/indication goes away with a known-good SH-AWD control unit, replace the original SH-AWD control unit (see page 15-71).■

4. Park the vehicle on a level surface.

5. Check the YAW RATE SENSOR in the DATA LIST with the HDS.

   *Is there 3.5 degls or less?*

   **YES**—Intermittent failure, the system is OK at this time. If the DTC returns, replace the SH-AWD control unit (see page 15-71).■

   **NO**—Do the yaw rate-lateral acceleration neutral position memorization (see page 15-7). If the DTC returns, replace the SH-AWD control unit (see page 15-71).■

Protected by AR



## DTC Troubleshooting (cont'd)

### DTC 41-1: F-CAN Malfunction (Lost Communication with Power Control Module (PCM))

NOTE: Before you troubleshoot, review the general troubleshooting information (see page 15-4).

1. Turn the ignition switch ON (II).
2. Check for DTCs in the PGM-FI system with the HDS.

   *Are there any PGM-FI DTCs indicated?*

   **YES**—Go to the indicated DTC's troubleshooting.■

   **NO**—Go to step 3.
3. Clear the DTC with the HDS.
4. Start the engine.
5. Check for DTCs with the HDS.

   *Is DTC 41-1 indicated?*

   **YES**—Go to step 6.

   **NO**—Intermittent failure, the system is OK at this time. Check for intermittent open between the SH-AWD control unit connector terminals No. A10 and A20 and the PCM connector terminals No. A36 and A37.■
6. Turn the ignition switch OFF.
7. Jump the SCS line with the HDS.

   NOTE: This step must be done to prevent PCM damage.
8. Disconnect PCM connector A (44P).
9. Connect PCM connector A (44P) terminal No. 36 and terminal No. 37 to body ground with a jumper wires.

**PCM CONNECTOR A (44P)**

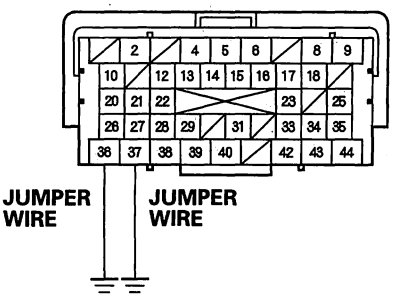


Terminal side of male terminals

10. Disconnect SH-AWD control unit connector A (20P).



BACK

Protected by AR

11. Check for continuity between SH-AWD control unit 20P connector A terminal No. 10 and terminal No. 20 to body ground.

**SH-AWD CONTROL UNIT CONNECTOR A (20P)**

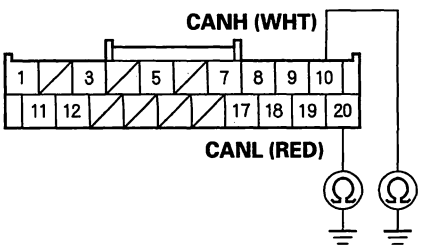


Wire side of female terminals

*Is there continuity?*

**YES**—Go to step 12.

**NO**—Repair open in the wires between the SH-AWD control unit and the PCM.■

12. Reconnect all connectors.

13. Turn the igniton switch ON (II).

14. Check for DTCs in the VSA system with the HDS.

*Are there any F-CAN communication failure DTCs between the VSA and PGM-FI system indicated?*

**YES**—Update the PCM if it does not have latest software (see page 11-7). If the PCM was updated, substitute a known-good PCM (see page 11-8), and recheck. If the symptom/indication goes away with a known-good PCM, replace the original PCM (see page 11-252).■

**NO**—Update the SH-AWD control unit if it does not have the latest software (see page 15-6), or substitute a known-good SH-AWD control unit and recheck (see page 15-71). If the symptom/indication goes away with the updated SH-AWD control unit, troubleshooting is complete. If the symptom/indication goes away with a known-good SH-AWD control unit, replace the original SH-AWD control unit (see page 15-71).■

## DTC 41-2: F-CAN Malfunction (Lost Communication with VSA)

NOTE: Before you troubleshoot, review the general troubleshooting information (see page 15-4).

1. Turn the ignition switch ON (II).

2. Check for DTCs in the PGM-FI system with the HDS.

*Are there any PGM-FI DTCs indicated?*

**YES**—Go to the indicated DTC's troubleshooting.■

**NO**—Go to step 3.

3. Clear the DTC with the HDS.

4. Start the engine.

5. Check for DTCs with the HDS.

*Is DTC 41-2 indicated?*

**YES**—Go to step 6.

**NO**—Intermittent failure, the system is OK at this time. Check for intermittent open between SH-AWD control unit connector terminals No. A10 and A20 and VSA modulator-control unit 46P connector terminals No. 39 and No. 38.■

6. Turn the ignition switch OFF.

(cont'd)

Protected by AR



## DTC Troubleshooting (cont'd)

7. Jump the SCS line with the HDS.

   NOTE: This step must be done to prevent PCM damage.

8. Disconnect the VSA modulator-control unit 46P connector.

9. Connect VSA modulator-control unit 46P connector terminals No. 39 and No. 38 to body ground with a jumper wires.

**VSA MODULATOR-CONTROL UNIT 46P CONNECTOR**

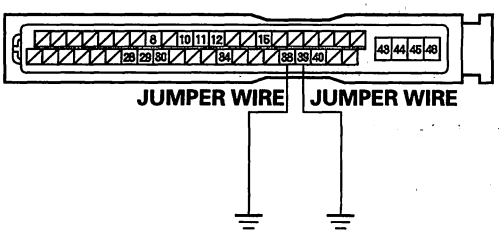


Wire side of female terminals

10. Disconnect SH-AWD control unit connector A (20P).

11. Check for continuity between SH-AWD control unit 20P connector A terminal No. 10 and terminal No. 20 to body ground.

**SH-AWD CONTROL UNIT CONNECTOR A (20P)**

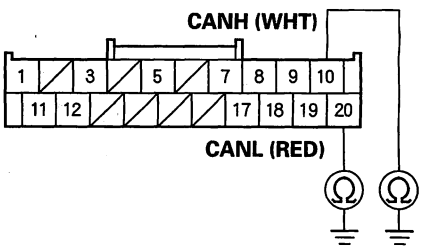


Wire side of female terminals

*Is there continuity?*

**YES**—Go to step 12.

**NO**—Repair an open in the wires between the SH-AWD control unit and the VSA modulator-control unit. ■

12. Check for DTCs in the PGM-FI system with the HDS.

    *Are there any F-CAN communication failure DTCs between the VSA and PGM-FI system indicated?*

    **YES**—Substitute a known-good VSA modulator-control unit and recheck (see page 19-83). If the symptom/indication goes away with a known-good VSA modulator-control unit, replace the original SH-AWD control unit (see page 15-71). ■

    **NO**—Update the SH-AWD control unit if it does not have the latest software (see page 15-6), or substitute a known-good SH-AWD control unit and recheck (see page 15-71). If the symptom/indication goes away with the updated SH-AWD control unit, troubleshooting is complete. If the symptom/indication goes away with a known-good SH-AWD control unit, replace the original SH-AWD control unit (see page 15-71). ■



BACK

Protected by AR

## DTC 41-4: F-CAN Malfunction (Lost Communication with A/T Control Unit)

NOTE: Before you troubleshoot, review the general troubleshooting information (see page 15-4).

1. Turn the ignition switch ON (II).
2. Check for DTCs in the PGM-FI system with the HDS.

   *Are there any PGM-FI DTCs indicated?*

   **YES**—Go to the indicated DTC's troubleshooting.■

   **NO**—Go to step 3.
3. Clear the DTC with the HDS.
4. Start the engine.
5. Check for DTCs with the HDS.

   *Is DTC 41-4 indicated?*

   **YES**—Go to step 6.

   **NO**—Intermittent failure, the system is OK at this time. Check for intermittent open between the SH-AWD control unit connector terminals No. A10 and A20 and the PCM (44P) connector terminals No. A36 and A37.■
6. Turn the ignition switch OFF.
7. Jump the SCS line with the HDS.

   NOTE: This step must be done to prevent PCM damage.
8. Disconnect PCM connector A (44P).
9. Connect PCM connector A (44P) terminal No. 36 and terminal No. 37 to body ground with a jumper wires.

**PCM CONNECTOR A (44P)**

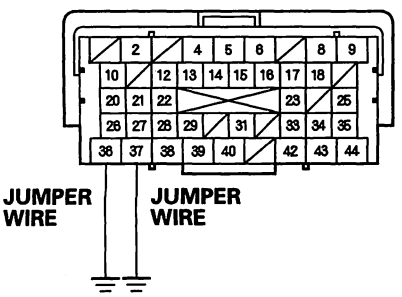


Terminal side of male terminals

10. Disconnect SH-AWD control unit connector A (20P).

(cont'd)

Protected by AR



## DTC Troubleshooting (cont'd)

11. Check for continuity between SH-AWD control unit connector terminals A10 and A20 to body ground.

**SH-AWD CONTROL UNIT CONNECTOR A (20P)**

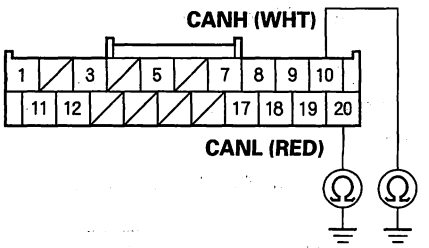


Wire side of female terminals

*Is there continuity?*

**YES**—Go to step 12.

**NO**—Repair an open in the wires between the SH-AWD control unit and the PCM. ■

12. Check for DTCs in the gauge control module with the HDS.

*Are there any F-CAN communication failure DTCs between the VSA and PGM-FI system indicated?*

**YES**—Update the PCM if it does not have latest software (see page 11-7). If the PCM was updated, substitute a known-good PCM (see page 11-8), and recheck. If the symptom/indication goes away with a known-good PCM, replace the original PCM (see page 11-252). ■

**NO**—Update the SH-AWD control unit if it does not have the latest software (see page 15-6), or substitute a known-good SH-AWD control unit and recheck (see page 15-71). If the symptom/indication goes away with the updated SH-AWD control unit, troubleshooting is complete. If the symptom/indication goes away with a known-good SH-AWD control unit, replace the original SH-AWD control unit (see page 15-71). ■

### DTC 41-5: F-CAN Malfunction (Lost Communication with Yaw Rate-lateral Acceleration Sensor)

NOTE: Before you troubleshoot, review the general troubleshooting information (see page 15-4).

1. Turn the ignition switch ON (II).

2. Check for DTCs in the VSA system with the HDS.

   *Are any yaw rate-lateral acceleration sensor DTCs or F-CAN indicated?*

   **YES**—Go to the indicated DTC's troubleshooting. ■

   **NO**—Go to step 3.

3. Clear the DTC with the HDS.

4. Start the engine.

5. Check for DTCs with the HDS.

   *Is DTC 41-5 indicated?*

   **YES**—Go to step 6.

   **NO**—Intermittent failure, the system is OK at this time. Check for intermittent open between the SH-AWD control unit connector terminals No. A10 and A20 and the yaw rate-lateral acceleration sensor 4P connector terminals No. 2 and No. 3. ■

6. Turn the ignition switch OFF.



BACK

Protected by AR

7. Jump the SCS line with the HDS.

   NOTE: This step must be done to prevent PCM damage.

8. Disconnect the yaw rate-lateral acceleration sensor 4P connector.

9. Connect yaw rate-lateral acceleration sensor 4P connector terminal No. 3 and terminal No. 2 to body ground with jumper wires.

**YAW RATE-LATERAL ACCELERATION SENSOR 4P CONNECTOR**

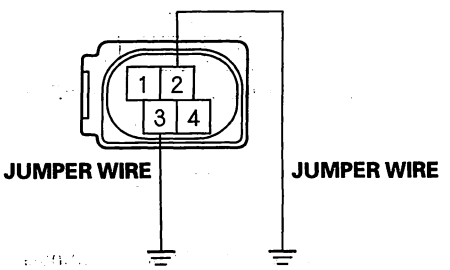


Wire side of female terminals

10. Disconnect SH-AWD control unit connector A (20P).

11. Check for continuity between SH-AWD control unit connector terminals A10 and A20 to body ground.

**SH-AWD CONTROL UNIT CONNECTOR A (20P)**

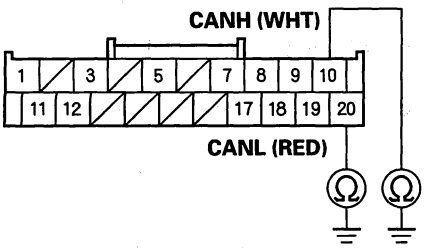


Wire side of female terminals

*Is there continuity?*

**YES**—Update the SH-AWD control unit if it does not have the latest software (see page 15-6), or substitute a known-good SH-AWD control unit and recheck (see page 15-71). If the symptom/indication goes away with the updated SH-AWD control unit, troubleshooting is complete. If the symptom/indication goes away with a known-good SH-AWD control unit, replace the original SH-AWD control unit (see page 15-71).■

**NO**—Repair open in the wires between the SH-AWD control unit and the yaw rate-lateral acceleration sensor.■

Protected by AR



## DTC Troubleshooting (cont'd)

### DTC 41-6: F-CAN Malfunction (Lost Communication with Steering Angle Sensor)

NOTE: Before you troubleshoot, review the general troubleshooting information (see page 15-4).

1. Turn the ignition switch ON (II).
2. Check for DTCs in the VSA system with the HDS.

   *Are any steering angle sensor DTCs of F-CAN indicated?*

   **YES**—Go to the indicated DTC's troubleshooting.■

   **NO**—Go to step 3.
3. Clear the DTC with the HDS.
4. Start the engine.
5. Check for DTCs with the HDS.

   *Is DTC 41-6 indicated?*

   **YES**—Go to step 6.

   **NO**—Intermittent failure, the system is OK at this time. Check for intermittent open between the SH-AWD control unit connector terminals No. A10 and A20 and steering angle sensor 5P connector terminals No. 2 and No. 4.■
6. Turn the ignition switch OFF.
7. Jump the SCS line with the HDS.

   NOTE: This step must be done to prevent PCM damage.
8. Disconnect the steering angle sensor 5P connector.
9. Connect steering angle sensor 5P connector terminal No. 4 and terminal No. 2 to body ground with a jumper wires.

**STEERING ANGLE SENSOR 5P CONNECTOR**

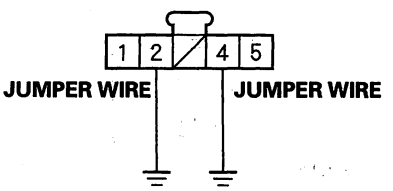


Wire side of female terminals

10. Disconnect SH-AWD control unit connector A (20P).



BACK

Protected by AR

11. Check for continuity between SH-AWD control unit 20P connector A terminal No. 10 and terminal No. 20 to body ground.

**SH-AWD CONTROL UNIT CONNECTOR A (20P)**

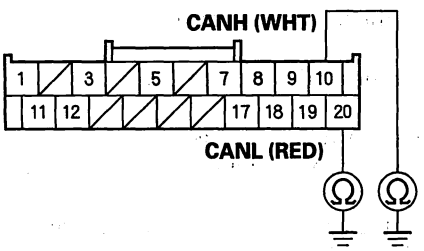


Wire side of female terminals

*Is there continuity?*

**YES**—Update the SH-AWD control unit if it does not have the latest software (see page 15-6), or substitute a known-good SH-AWD control unit and recheck (see page 15-71). If the symptom/indication goes away with the updated SH-AWD control unit, troubleshooting is complete. If the symptom/indication goes away with a known-good SH-AWD control unit, replace the original SH-AWD control unit (see page 15-71).■

**NO**—Repair open in the wires between the SH-AWD control unit and the steering angle sensor.■

## DTC 42-1: Differential Fluid Temperature Sensor (Short to Power)

NOTE:
- Before you troubleshoot, review the general troubleshooting information (see page 15-4).
- When troubleshooting after the vehicle was driving, let the rear differential cool for more than one hour before doing this troubleshooting.

1. Turn the ignition switch ON (II).
2. Clear the DTC with the HDS.
3. Check for DTCs with the HDS.

   *Is DTC 42-1 indicated?*

   **YES**—Go to step 4.

   **NO**—Intermittent failure, the system is OK at this time.■

4. Turn the ignition switch OFF.
5. Disconnect the rear differential fluid temperature sensor 2P connector and SH-AWD connector A (20P).
6. Check for continuity between rear differential fluid temperature sensor 2P connector terminals No. 1 and No. 2.

**REAR DIFFERENTIAL FLUID TEMPERATURE SENSOR 2P CONNECTOR**

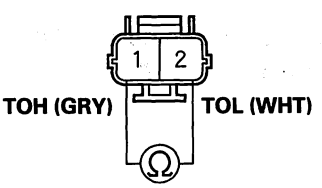


Wire side of male terminals

*Is there continuity?*

**YES**—Repair short in the wire between rear differential fluid temperature sensor 2P connector terminals No. 1 and No. 2.

**NO**—Go to step 7.

(cont'd)

Protected by AR



## DTC Troubleshooting (cont'd)

7. Connect the rear differential fluid temperature sensor 2P connector.

8. Measure the differential housing temperature with an infrared temperature gauge near the mounting location of the rear differential fluid temperature sensor. The temperature should be below 176 °F (80 °C) before proceeding to the next step.

9. Measure resistance between SH-AWD control unit connector terminals A8 and A18.

**SH-AWD CONTROL UNIT CONNECTOR A (20P)**

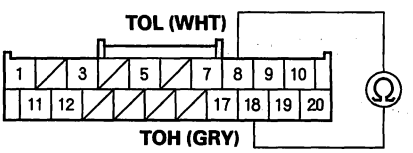


Wire side of female terminals

*Is there 260 Ω or more?*

**YES**—Update the SH-AWD control unit if it does not have the latest software (see page 15-6), or substitute a known-good SH-AWD control unit and recheck (see page 15-71). If the symptom/indication goes away with the updated SH-AWD control unit, troubleshooting is complete. If the symptom/indication goes away with a known-good SH-AWD control unit, replace the original SH-AWD control unit (see page 15-71).■

**NO**—Replace the rear differential fluid temperature sensor (see page 15-70).■

### DTC 42-2: Differential Fluid Temperature Sensor (Open/GND Short)

NOTE: Before you troubleshoot, review the general troubleshooting information (see page 15-4).

1. Turn the ignition switch ON (II).

2. Clear the DTC with the HDS.

3. Raise the vehicle, make sure it is securely supported, and allow all four wheels to rotate freely.

4. Start the engine and turn the VSA off (the light on the VSA OFF switch comes on). Run the engine in the D position until the vehicle speed reaches 35 mph (56 km/h) and keep running for 10 minutes, then slow down and stop the wheels.

5. Check for DTCs with the HDS.

   *Is DTC 42-2 indicated?*

   **YES**—Go to step 6.

   **NO**—Intermittent failure, the system is OK at this time.■

6. Turn the ignition switch OFF.

7. Disconnect SH-AWD control unit connector A (20P).

8. Connect SH-AWD control unit 20P connector terminal A18 to body ground with jumper wire.

**SH-AWD CONTROL UNIT CONNECTOR A (20P)**

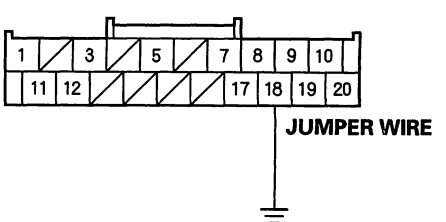


Wire side of female terminals



BACK

Protected by AR

9. Disconnect the rear differential fluid temperature sensor 2P connector.

10. Check for continuity between rear differential fluid temperature sensor 2P connector terminal No. 1 to body ground.

**REAR DIFFERENTIAL FLUID TEMPERATURE SENSOR 2P CONNECTOR**

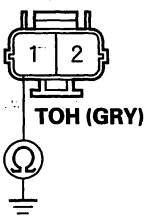


Wire side of male terminals

*Is there continuity?*

**YES**—Go to step 11.

**NO**—Repair open in the wire between SH-AWD control unit connector A and the rear differential fluid temperature sensor connector.■

11. Connect SH-AWD control unit 20P connector terminal A8 to body ground with jumper wire.

**SH-AWD CONTROL UNIT CONNECTOR A (20P)**

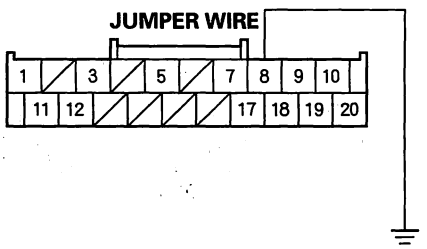


Wire side of female terminals

12. Check for continuity between rear differential fluid temperature sensor 2P connector terminal No. 2 to body ground.

**REAR DIFFERENTIAL FLUID TEMPERATURE SENSOR 2P CONNECTOR**

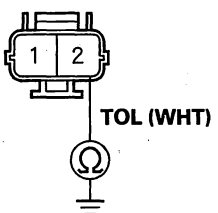


Wire side of male terminals

*Is there continuity?*

**YES**—Go to step 13.

**NO**—Repair open in the wire between SH-AWD control unit connector A and the rear differential fluid temperature sensor connector.■

(cont'd)

Protected by AR



## DTC Troubleshooting (cont'd)

13. Check for continuity between SH-AWD control unit connector terminals A9 and A18.

**SH-AWD CONTROL UNIT CONNECTOR A (20P)**

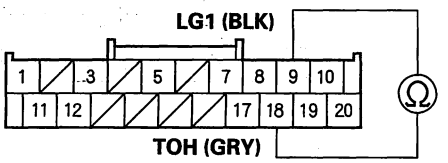


Wire side of female terminals

*Is there continuity?*

**YES**—Repair short in the wire between SH-AWD control unit connector A and the rear differential fluid temperature sensor connector. ■

**NO**—Go to step 14.

14. Check for continuity between SH-AWD control unit connector terminals A8 and A9.

**SH-AWD CONTROL UNIT CONNECTOR A (20P)**

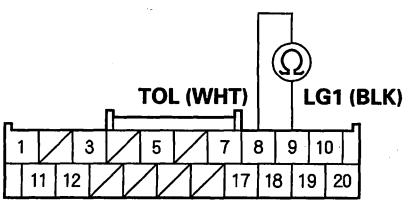


Wire side of female terminals

*Is there continuity?*

**YES**—Repair short in the wire between SH-AWD control unit connector A and the rear differential fluid temperature sensor connector. ■

**NO**—Go to step 15.

15. Reconnect all connectors.

16. Measure resistance between SH-AWD control unit connector terminals A8 and A18.

**SH-AWD CONTROL UNIT CONNECTOR A (20P)**

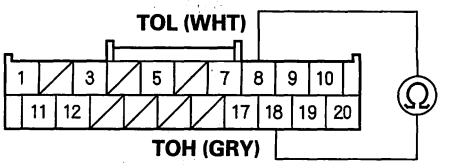


Wire side of female terminals

*Is there 12.67 kΩ or less?*

**YES**—Update the SH-AWD control unit if it does not have the latest software (see page 15-6), or substitute a known-good SH-AWD control unit and recheck (see page 15-71). If the symptom/indication goes away with the updated SH-AWD control unit, troubleshooting is complete. If the symptom/indication goes away with a known-good SH-AWD control unit, replace the original SH-AWD control unit (see page 15-71). ■

**NO**—Replace the rear differential fluid temperature sensor (see page 15-70). ■



BACK

Protected by AR

## **DTC 43-1:** Differential Fluid Temperature Sensor Malfunction

NOTE: Before you troubleshoot, review the general troubleshooting information (see page 15-4).

1. Turn the ignition switch ON (II).
2. Check for DTCs with the HDS.

   *Is DTC 42-1 or 42-2 indicated?*

   **YES**—Go to the indicated DTC's troubleshooting. ■

   **NO**—Go to step 3.
3. Clear the DTC with the HDS.
4. Start the engine.
5. Let the engine idle 1 minute.
6. Test-drive the vehicle for 5 minutes.
7. Check for DTCs with the HDS.

   *Is DTC 43-1 indicated?*

   **YES**—Go to step 8.

   **NO**—Intermittent failure, the system is OK at this time. ■
8. Turn the ignition switch OFF.
9. Disconnect SH-AWD control unit connector A (20P).
10. Disconnect the rear differential fluid temperature sensor 2P connector.
11. Check for continuity between rear differential fluid temperature sensor 2P connector terminals No. 1 and No. 2.

**REAR DIFFERENTIAL FLUID TEMPERATURE SENSOR 2P CONNECTOR**

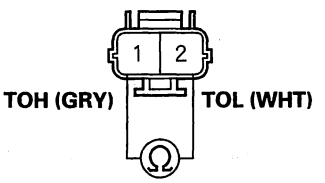


Wire side of male terminals

*Is there continuity?*

**YES**—Repair short in the wires between rear differential fluid temperature sensor 2P connector terminals No. 1 and No. 2. ■

**NO**—Go to step 12.

12. Reconnect all connectors.
13. Update the SH-AWD control unit if it does not have the latest software (see page 15-6), or substitute a known-good SH-AWD control unit (see page 15-71).
14. Start the engine.
15. Let the engine idle 1 minute.
16. Check for DTCs with the HDS.

    *Is DTC 43-1 indicated?*

    **YES**—Replace the rear differential fluid temperature sensor (see page 15-70). ■

    **NO**—Replace the original SH-AWD control unit (see page 15-71). ■

BACK

Protected by AR



## DTC Troubleshooting (cont'd)

### **DTC 44-11:** SH-AWD Control Unit

NOTE: Before you troubleshoot, review the general troubleshooting information (see page 15-4).

1. Turn the ignition switch ON (II).
2. Clear the DTC with the HDS.
3. Check for DTCs with the HDS.

   *Is DTC 44-11 indicated?*

   **YES**—Update the SH-AWD control unit if it does not have the latest software (see page 15-6), or substitute a known-good SH-AWD control unit and recheck (see page 15-71). If the symptom/indication goes away with the updated SH-AWD control unit, troubleshooting is complete. If the symptom/indication goes away with a known-good SH-AWD control unit, replace the original SH-AWD control unit (see page 15-71).■

   **NO**—Intermittent failure, the system is OK at this time.■



BACK

Protected by AR

## DTC 44-12: SH-AWD Relay Stuck ON

NOTE: Before you troubleshoot, review the general troubleshooting information (see page 15-4).

1. Turn the ignition switch ON (II).
2. Clear the DTC with the HDS.
3. Start the engine.
4. Check for DTCs with the HDS.

   *Is DTC 44-12 indicated?*

   **YES**—Go to step 5.

   **NO**—Intermittent failure, the system is OK at this time. ■

5. Turn the ignition switch OFF.
6. Remove the SH-AWD relay (see page 15-71), than test the SH-AWD relay (see page 22-64). ■

   *Is the SH-AWD relay OK?*

   **YES**—Go to step 7.

   **NO**—Replace the SH-AWD relay (see page 15-71). ■

7. Disconnect SH-AWD control unit connector A (20P).
8. Turn the ignition switch ON (II).
9. Measure voltage between SH-AWD control unit connector terminal A17 and body ground.

SH-AWD CONTROL UNIT CONNECTOR A (20P)

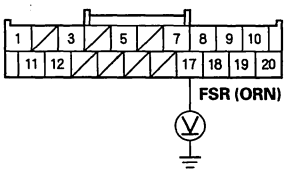


Wire side of female terminals

*Is there battery voltage?*

**YES**—Repair short to power in the wire between the SH-AWD control unit and the SH-AWD relay (FSR line). ■

**NO**—Go to step 10.

10. Disconnect SH-AWD control unit connector B (8P).
11. Measure voltage between SH-AWD control unit connector terminals B1 and B2.

SH-AWD CONTROL UNIT CONNECTOR B (8P)

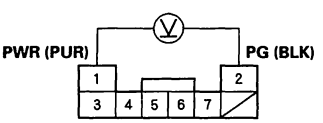


Wire side of female terminals

*Is there battery voltage?*

**YES**—Repair short to power in the wire between the SH-AWD control unit and the SH-AWD relay (PWR line). ■

**NO**—Update the SH-AWD control unit if it does not have the latest software (see page 15-6), or substitute a known-good SH-AWD control unit and recheck (see page 15-71). If the symptom/indication goes away with the updated SH-AWD control unit, troubleshooting is complete. If the symptom/indication goes away with a known-good SH-AWD control unit, replace the original SH-AWD control unit (see page 15-71). ■

Protected by AR



## DTC Troubleshooting (cont'd)

### **DTC 44-32:** SH-AWD Control Unit Power Supply Stuck ON

NOTE: Before you troubleshoot, review the general troubleshooting information (see page 15-4).

1. Turn the ignition switch ON (II).
2. Clear the DTC with the HDS.
3. Start the engine.
4. Check for DTCs with the HDS.

*Is DTC 44-32 indicated?*

**YES**—Update the SH-AWD control unit if it does not have the latest software (see page 15-6), or substitute a known-good SH-AWD control unit and recheck (see page 15-71). If the symptom/indication goes away with the updated SH-AWD control unit, troubleshooting is complete. If the symptom/indication goes away with a known-good SH-AWD control unit, replace the original SH-AWD control unit (see page 15-71).■

**NO**—Intermittent failure, the system is OK at this time.■

### **DTC 44-41:** SH-AWD Control Unit Power Supply Stuck OFF

NOTE: Before you troubleshoot, review the general troubleshooting information (see page 15-4).

1. Turn the ignition switch ON (II).
2. Clear the DTC with the HDS.
3. Start the engine.
4. Check for DTCs with the HDS.

*Is DTC 44-41 indicated?*

**YES**—Update the SH-AWD control unit if it does not have the latest software (see page 15-6), or substitute a known-good SH-AWD control unit and recheck (see page 15-71). If the symptom/indication goes away with the updated SH-AWD control unit, troubleshooting is complete. If the symptom/indication goes away with a known-good SH-AWD control unit, replace the original SH-AWD control unit (see page 15-71).■

**NO**—Intermittent failure, the system is OK at this time.■



BACK

Protected by AR

## DTC 44-50: SH-AWD Control Unit Power Supply Voltage Low

NOTE: Before you troubleshoot, review the general troubleshooting information (see page 15-4).

1. Make sure the battery is fully changed and the charging system is working properly.

2. Turn the ignition switch OFF.

3. Check the No. 1 (30 A) fuse in the under-hood fuse/relay box.

   *Is the fuse OK?*

   **YES**—Go to step 4.

   **NO**—Replace the blown fuse and recheck. If the No. 1 (30 A) fuse blows again, repair short to ground in the wire between the fuse and the SH-AWD relay, then replace the fuse and recheck.■

4. Clear the DTC with the HDS.

5. Start the engine.

6. Check for DTCs with the HDS.

   *Is DTC 44-50 indicated?*

   **YES**—Go to step 7.

   **NO**—Intermittent failure, the system is OK at this time.■

7. Turn the ignition switch OFF.

8. Remove the SH-AWD relay (see page 15-71), then test the SH-AWD relay (see page 22-64).

   *Is the SH-AWD relay OK?*

   **YES**—Go to step 9.

   **NO**—Replace the SH-AWD relay (see page 15-71). ■

9. Measure voltage between SH-AWD relay 4P connector terminal No. 1 and body ground.

**SH-AWD RELAY 4P CONNECTOR**

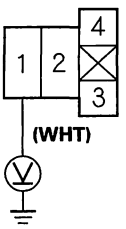


Wire side of female terminals

   *Is there battery voltage?*

   **YES**—Go to step 10.

   **NO**—Repair open in the wire between the No. 1 fuse in the under-hood fuse/relay box and the SH-AWD relay.■

10. Disconnect SH-AWD control unit connector A (20P) and connector B (8P).

11. Check for continuity between SH-AWD control unit connector terminal B1 and SH-AWD relay 4P connector terminal No. 2.

**SH-AWD RELAY 4P CONNECTOR**
Wire side of female terminals

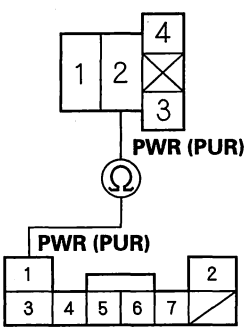


**SH-AWD CONTROL UNIT CONNECTOR B (8P)**
Wire side of female terminals

   *Is there continuity?*

   **YES**—Go to step 12.

   **NO**—Repair open in the wire between SH-AWD control unit connector B and the SH-AWD relay connector.■

(cont'd)

Protected by AR



## DTC Troubleshooting (cont'd)

12. Check for continuity between SH-AWD control unit connector terminal A17 and SH-AWD relay 4P connector terminal No. 3.

**SH-AWD RELAY 4P CONNECTOR**
Wire side of female terminals

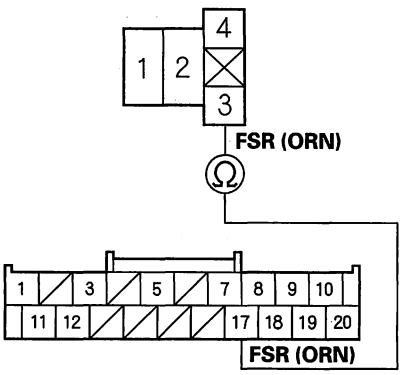


**SH-AWD CONTROL UNIT CONNECTOR A (20P)**
Wire side of female terminals

*Is there continuity?*

**YES**—Go to step 13.

**NO**—Repair open in the wire between SH-AWD control unit connector A and the SH-AWD relay connector.■

13. Check for continuity between SH-AWD relay 4P connector terminal No. 4 and body ground.

**SH-AWD RELAY 4P CONNECTOR**

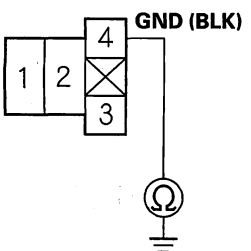


Wire side of female terminals

*Is there continuity?*

**YES**—Go to step 14.

**NO**—Repair open in the wire between the SH-AWD relay and body ground.■

14. Check for continuity between SH-AWD relay 4P connector terminals No. 2 and No. 3 to body ground.

**SH-AWD RELAY 4P CONNECTOR**

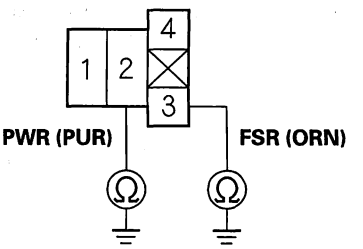


Wire side of female terminals

*Is there continuity?*

**YES**—Repair short in the wire between SH-AWD relay and body ground.■

**NO**—Check for loose connector terminals at the SH-AWD control unit. If the connections are OK, update the SH-AWD control unit if it does not have the latest software (see page 15-6), or substitute a known-good SH-AWD control unit and recheck (see page 15-71). If the symptom/indication goes away with the updated SH-AWD control unit, troubleshooting is complete. If the symptom/indication goes away with a known-good SH-AWD control unit, replace the original SH-AWD control unit (see page 15-71).■



BACK

Protected by AR

## **DTC 49-1:** SH-AWD Control Unit (PG Line Open)

NOTE: Before you troubleshoot, review the general troubleshooting information (see page 15-4).

1. Turn the ignition switch ON (II).
2. Clear the DTC with the HDS.
3. Check for DTCs with the HDS.

   *Is DTC 49-1 indicated?*

   **YES**—Go to step 4.

   **NO**—Intermittent failure, the system is OK at this time.■

4. Turn the ignition switch OFF.
5. Disconnect SH-AWD control unit connector B (8P).
6. Check for continuity between SH-AWD control unit connector terminal B2 and body ground.

**SH-AWD CONTROL UNIT CONNECTOR B (8P)**

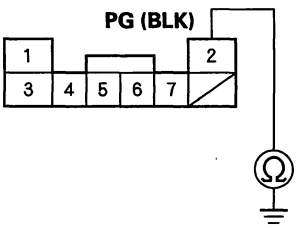


Wire side of female terminals

*In there continuity?*

**YES**—Update the SH-AWD control unit if it does not have the latest software (see page 15-6), or substitute a known-good SH-AWD control unit and recheck (see page 15-71). If the symptom/indication goes away with the updated SH-AWD control unit, troubleshooting is complete. If the symptom/indication goes away with a known-good SH-AWD control unit, replace the original SH-AWD control unit (see page 15-71).■

**NO**—Repair open in the wire between SH-AWD control unit connector B and body ground or poor ground.■

BACK

Protected by AR



## DTC Troubleshooting (cont'd)

### DTC 52-3: Left Clutch Electromagnetic Coil Current Malfunction

NOTE: Before you troubleshoot, review the general troubleshooting information (see page 15-4).

1. Turn the ignition switch ON (II).
2. Clear the DTC with the HDS.
3. Do the clutch function test with the HDS (see page 15-68).
4. Check for DTCs with the HDS.

   *Is DTC 52-3 indicated?*

   **YES**—Go to step 5.

   **NO**—Intermittent failure, the system is OK at this time.■

5. Turn the ignition switch OFF.
6. Disconnect SH-AWD control unit connector B (8P).
7. Check for continuity between SH-AWD control unit connector terminal B2 and body ground..

**SH-AWD CONTROL UNIT CONNECTOR B (8P)**

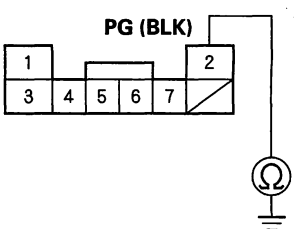


Wire side of female terminals

*Is there continuity?*

**YES**—Go to step 8.

**NO**—Repair open in the wire between SH-AWD control unit connector B and body ground or poor ground (G601).■

8. Connect a jumper wire between SH-AWD control unit connector terminals B4 and B5. Disconnect the left solenoid 4P connector, then check for continuity between left solenoid 4P connector terminals No. 1 and No. 2.

**SH-AWD CONTROL UNIT CONNECTOR B (8P)**

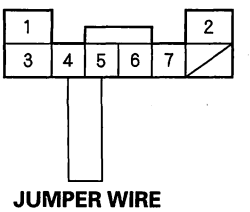


Wire side of female terminals

**LEFT SOLENOID 4P CONNECTOR**

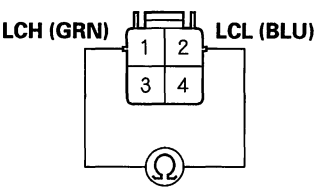


Wire side of female terminals

*Is there continuity?*

**YES**—Go to step 9.

**NO**—Repair open in the wires between the SH-AWD control unit and the left clutch electromagnetic coil.■

9. Remove the jumper wire from SH-AWD control unit connector terminals B4 and B5.



BACK

Protected by AR

10. Check for continuity between SH-AWD control unit connector terminals B2 and B4, then check for continuity between SH-AWD control unit connector terminals B2 and B5.

**SH-AWD CONTROL UNIT CONNECTOR B (8P)**

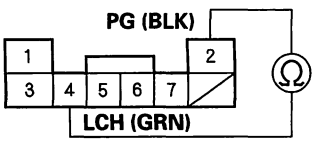


Wire side of female terminals

**SH-AWD CONTROL UNIT CONNECTOR B (8P)**

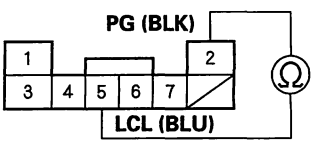


Wire side of female terminals

*Is there continuity?*

**YES**—Repair short to ground in the wire(s) between the SH-AWD control unit and the left clutch electromagnetic coil. ■

**NO**—Go to step 11.

11. Check for continuity between SH-AWD control unit connector terminals B4 and B5.

**SH-AWD CONTROL UNIT CONNECTOR B (8P)**

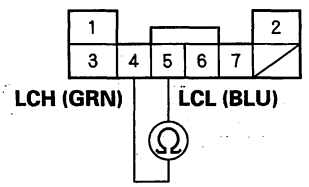


Wire side of female terminals

*Is there continuity?*

**YES**—Repair short in the wires between the SH-AWD control unit and the left clutch electromagnetic coil. ■

**NO**—Go to step 12.

12. Measure voltage between SH-AWD control unit connector terminals B2 and B5.

**SH-AWD CONTROL UNIT CONNECTOR B (8P)**

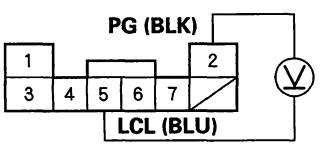


Wire side of female terminals

*Is there battery voltage?*

**YES**—Repair short to power in the wire between the SH-AWD control unit and the left clutch electromagnetic coil. ■

**NO**—Go to step 13.

(cont'd)

Protected by AR



## DTC Troubleshooting (cont'd)

13. Measure voltage between SH-AWD control unit connector terminals B2 and B4.

**SH-AWD CONTROL UNIT CONNECTOR B (8P)**

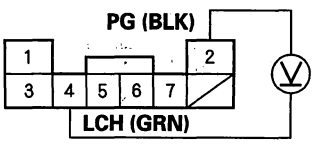


Wire side of female terminals

*Is there battery voltage?*

**YES**—Repair short to power in the wire between the SH-AWD control unit terminal B4 and the left clutch electromagnetic coil. ■

**NO**—Substitute a known-good SH-AWD control unit and recheck (see page 15-71). If the symptom/indication goes away with a known-good SH-AWD control unit, replace the rear differential left side case. ■



BACK

Protected by AR

## DTC 53-1, 53-3: Left Clutch Electromagnetic Coil Malfunction

NOTE: Before you troubleshoot, review the general troubleshooting information (see page 15-4).

1. Turn the ignition switch ON (II).
2. Clear the DTC with the HDS.
3. Do the clutch function test with the HDS (see page 15-68).
4. Check for DTCs with the HDS.

   *Is DTC 53-1 or 53-3 indicated?*

   **YES**—Go to step 5.

   **NO**—Intermittent failure, the system is OK at this time.■

5. Turn the ignition switch OFF.
6. Disconnect SH-AWD control unit connector B (8P) and the left solenoid 4P connector.
7. Connect a jumper wire between left solenoid 4P connector terminal No. 1.

**LEFT SOLENOID 4P CONNECTOR**

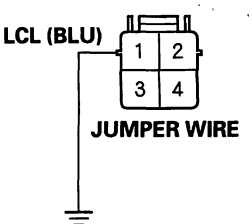


Wire side of female terminals

8. Check for continuity between SH-AWD control unit connector terminal B5 and body ground.

**SH-AWD CONTROL UNIT CONNECTOR B (8P)**

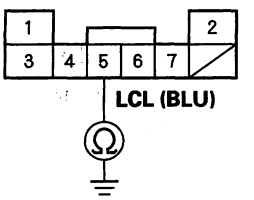


Wire side of female terminals

*Is there continuity?*

**YES**—Go to step 9.

**NO**—Repair open in the wires between the SH-AWD control unit and the left clutch electromagnetic coil.■

9. Remove the jumper wire from the left solenoid 4P connector terminal No. 1.
10. Connect a jumper wire between left solenoid 4P connector terminal No. 2.

**LEFT SOLENOID 4P CONNECTOR**

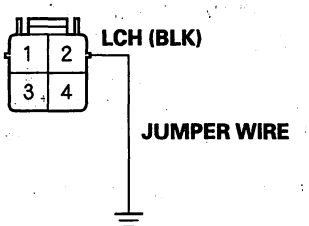


Wire side of female terminals

(cont'd)

Protected by AR



## DTC Troubleshooting (cont'd)

11. Check for continuity between SH-AWD control unit connector terminal B4 and body ground.

**SH-AWD CONTROL UNIT CONNECTOR B (8P)**

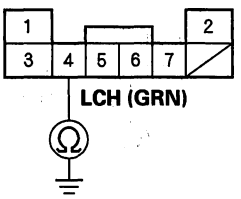


Wire side of female terminals

*Is there continuity?*

**YES**—Go to step 12.

**NO**—Repair open in the wires between the SH-AWD control unit and the left clutch electromagnetic coil.■

12. Remove the jumper wire from the left solenoid 4P connector terminal No. 1.

13. Reconnect all connectors.

14. Turn the ignition switch ON ((II).

15. Check the REAR DIFFERENTIAL FLUID TEMPERATURE in the DATA LIST is above 68 °F (20 °C) with the HDS before proceeding to the next step. If the temperature is below 68 °F (20 °C), drive the vehicle to warm up the rear differential until the fluid temperature becomes above 68 °F (20 °C).

16. Turn the ignition switch OFF.

17. Disconnect the left solenoid 4P connector.

18. Measure resistance between left solenoid 4P connector terminals No. 1 and No. 2.

**LEFT SOLENOID 4P CONNECTOR**

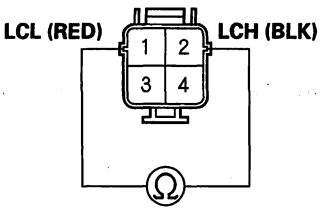


Wire side of male terminals

*Is there 1.8 Ω or more?*

**YES**—Replace the rear differential left side case (see page 15-88).■

**NO**—Update the SH-AWD control unit if it does not have the latest software (see page 15-6), or substitute a known-good SH-AWD control unit and recheck (see page 15-71). If the symptom/indication goes away with the updated SH-AWD control unit, troubleshooting is complete. If the symptom/indication goes away with a known-good SH-AWD control unit, replace the original SH-AWD control unit (see page 15-71).■



BACK

Protected by AR

## DTC 53-2: Left Clutch Electromagnetic Coil (Short)

NOTE: Before you troubleshoot, review the general troubleshooting information (see page 15-4).

1. Turn the ignition switch ON (II).
2. Clear the DTC with the HDS.
3. Do the clutch function test with the HDS (see page 15-68).
4. Check for DTCs with the HDS.

   *Is DTC 53-2 indicated?*

   **YES**—Go to step 5.

   **NO**—Intermittent failure, the system is OK at this time. ■

5. Turn the ignition switch OFF.
6. Disconnect SH-AWD control unit connector B (8P) and the left solenoid 4P connector.
7. Check for continuity between SH-AWD control unit connector terminals B4 and B5.

**SH-AWD CONTROL UNIT CONNECTOR B (8P)**

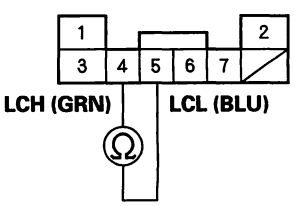


Wire side of female terminals

*Is there continuity?*

**YES**—Repair short in the wires between SH-AWD control unit connector terminals B4 and B5.

**NO**—Go to step 8.

8. Turn the ignition switch ON (II).
9. Measure voltage between SH-AWD control unit connector terminal B4 and body ground.

**SH-AWD CONTROL UNIT CONNECTOR B (8P)**

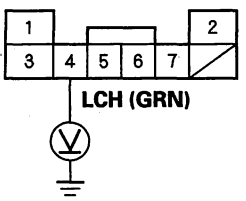


Wire side of female terminals

*Is there battery voltage?*

**YES**—Repair short to power in the wires between SH-AWD control unit connector terminal B4 and left clutch electromagnetic coil. ■

**NO**—Go to step 10.

10. Turn the ignition switch OFF.
11. Reconnect all connectors.
12. Turn the ignition switch ON (II).

(cont'd)

Protected by AR



## DTC Troubleshooting (cont'd)

13. Check the REAR DIFFERENTIAL FLUID TEMPERATURE in the DATA LIST is above 68 °F (20 °C) with the HDS before proceeding to the next step. If the temperature is below 68 °F (20 °C), drive the vehicle to warm up the rear differential until the fluid temperature becomes above 68 °F (20 °C).

14. Turn the ignition switch OFF.

15. Disconnect the left solenoid 4P connector.

16. Measure resistance between left solenoid 4P connector terminals No. 1 and No. 2.

**LEFT SOLENOID 4P CONNECTOR**

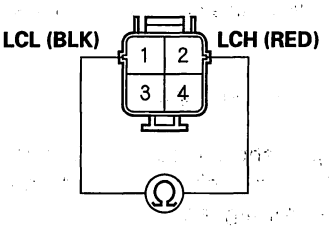


Wire side of male terminals

*Is there 0.45 Ω or less?*

**YES**—Replace the rear differential left side case (see page 15-88).■

**NO**—Update the SH-AWD control unit if it does not have the latest software (see page 15-6), or substitute a known-good SH-AWD control unit and recheck (see page 15-71). If the symptom/indication goes away with the updated SH-AWD control unit, troubleshooting is complete. If the symptom/indication goes away with a known-good SH-AWD control unit, replace the original SH-AWD control unit (see page 15-71).■



BACK

Protected by AR

## DTC 56-3: Right Clutch Electromagnetic Coil Current Malfunction

NOTE: Before you troubleshoot, review the general troubleshooting information (see page 15-4).

1. Turn the ignition switch ON (II).
2. Clear the DTC with the HDS.
3. Do the clutch function test with the HDS (see page 15-68).
4. Check for DTCs with the HDS.

   *Is DTC 56-3 indicated?*

   **YES**—Go to step 5.

   **NO**—Intermittent failure, the system is OK at this time.■

5. Turn the ignition switch OFF.
6. Disconnect SH-AWD control unit connector B (8P).
7. Check for continuity between SH-AWD control unit connector terminal B2 and body ground.

**SH-AWD CONTROL UNIT CONNECTOR B (8P)**

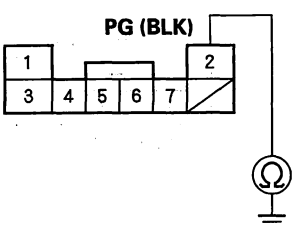


Wire side of female terminals

*Is there continuity?*

**YES**—Go to step 8.

**NO**—Repair open in the wire between SH-AWD control unit connector B and body ground or poor ground (G601).■

8. Connect a jumper wire between SH-AWD control unit connector terminals B4 and B5. Disconnect the right solenoid 4P connector, then check for continuity between right solenoid 4P connector terminals No. 1 and No. 2.

**SH-AWD CONTROL UNIT CONNECTOR B (8P)**

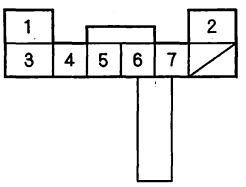


**JUMPER WIRE**

Wire side of female terminals

**RIGHT SOLENOID 4P CONNECTOR**

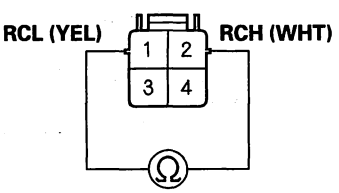


Wire side of female terminals

*Is there continuity?*

**YES**—Go to step 9.

**NO**—Repair open in the wires between the SH-AWD control unit and the right clutch electromagnetic coil.■

9. Remove the jumper wire from SH-AWD control unit connector terminals B6 and B7.

(cont'd)

Protected by AR



## DTC Troubleshooting (cont'd)

10. Check for continuity between SH-AWD control unit connector terminals B2 and B6, then check for continuity between SH-AWD control unit connector terminals B2 and B7.

**SH-AWD CONTROL UNIT CONNECTOR B (8P)**

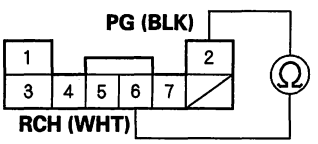


Wire side of female terminals

**SH-AWD CONTROL UNIT CONNECTOR B (8P)**

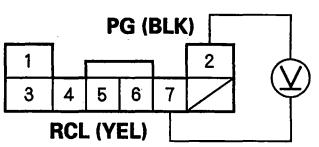


Wire side of female terminals

*Is there continuity?*

**YES**—Repair short to ground in the wire(s) between the SH-AWD control unit and the right clutch electromagnetic coil. ■

**NO**—Go to step 11.

11. Check for continuity between SH-AWD control unit connector terminals B6 and B7.

**SH-AWD CONTROL UNIT CONNECTOR B (8P)**

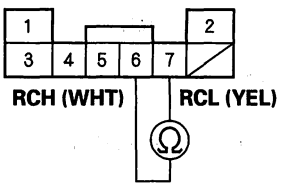


Wire side of female terminals

*Is there continuity?*

**YES**—Repair short in the wires between the SH-AWD control unit and the right clutch electromagnetic coil. ■

**NO**—Go to step 12.

12. Measure voltage between SH-AWD control unit connector terminals B2 and B7.

**SH-AWD CONTROL UNIT CONNECTOR B (8P)**

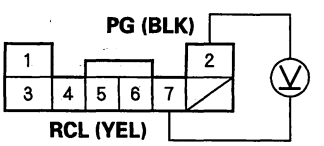


Wire side of female terminals

*Is there battery voltage?*

**YES**—Repair short to power in the wire between the SH-AWD control unit and the right clutch electromagnetic coil. ■

**NO**—Go to step 13.



BACK

Protected by AR

13. Measure voltage between SH-AWD control unit connector terminals B2 and B6.

**SH-AWD CONTROL UNIT CONNECTOR B (8P)**

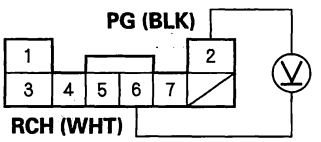


Wire side of female terminals

*Is there battery voltage?*

**YES**—Repair short to power in the wire between the SH-AWD control unit connector terminal B6 and left clutch electromagnetic coil. ■

**NO**—Update the SH-AWD control unit if it does not have the latest software (see page 15-6), or substitute a known-good SH-AWD control unit and recheck (see page 15-71). If the symptom/indication goes away with the updated SH-AWD control unit, troubleshooting is complete. If the symptom/indication goes away with a known-good SH-AWD control unit, replace the original SH-AWD control unit (see page 15-71). If the symptom/indication does not goes away, replace the rear differential right side case (see page 15-88). ■

Protected by AR



## DTC Troubleshooting (cont'd)

### DTC 57-1, 57-3: Right Clutch Electromagnetic Coil Malfunction

NOTE: Before you troubleshoot, review the general troubleshooting information (see page 15-4).

1. Turn the ignition switch ON (II).
2. Clear the DTC with the HDS.
3. Do the clutch function test with the HDS (see page 15-68).
4. Check for DTCs with the HDS.

   *Is DTC 57-1 or 57-3 indicated?*

   **YES**—Go to step 5.

   **NO**—Intermittent failure, the system is OK at this time.■

5. Turn the ignition switch OFF.
6. Disconnect SH-AWD control unit connector B (8P) and the right solenoid 4P connector.
7. Connect a jumper wire between right solenoid 4P connector terminal No. 1.

**RIGHT SOLENOID 4P CONNECTOR**

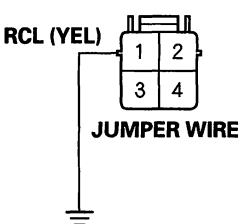


Wire side of female terminals

8. Check for continuity between SH-AWD control unit connector terminal B7 and body ground.

**SH-AWD CONTROL UNIT CONNECTOR B (8P)**

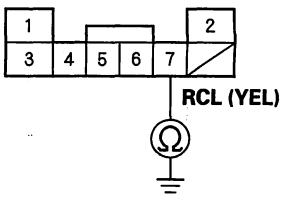


Wire side of female terminals

*Is there continuity?*

**YES**—Go to step 9.

**NO**—Repair open in the wires between the SH-AWD control unit and the right clutch electromagnetic coil.■

9. Remove the jumper wire from the right solenoid 4P connector terminal No. 1.
10. Connect a jumper wire between right solenoid 4P connector terminal No. 2.

**RIGHT SOLENOID 4P CONNECTOR**

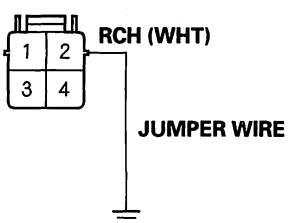


Wire side of female terminals



BACK

Protected by AR

11. Check for continuity between SH-AWD control unit connector terminal B6 and body ground.

**SH-AWD CONTROL UNIT CONNECTOR B (8P)**

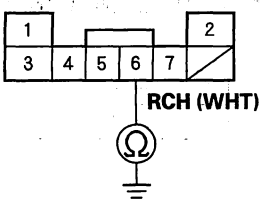


Wire side of female terminals

*Is there continuity?*

**YES**—Go to step 12.

**NO**—Repair open in the wires between the SH-AWD control unit and the right clutch electromagnetic coil.■

12. Remove the jumper wire from the right solenoid 4P connector terminal No. 1.

13. Reconnect all connectors.

14. Turn the ignition switch ON ((II).

15. Check the REAR DIFFERENTIAL FLUID TEMPERATURE in the DATA LIST is above 68 ℉ (20 ℃) with the HDS before proceeding to the next step. If the temperature is below 68 ℉ (20 ℃), drive the vehicle to warm up the rear differential until the fluid temperature becomes above 68 ℉ (20 ℃).

16. Disconnect the right solenoid 4P connector.

17. Measure resistance between right solenoid 4P connector terminals No. 1 and No. 2.

**RIGHT SOLENOID 4P CONNECTOR**

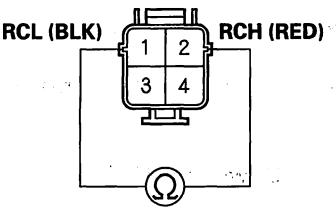


Wire side of male terminals

*Is there 1.8 Ω or more?*

**YES**—Replace the rear differential right side case (see page 15-88).■

**NO**—Update the SH-AWD control unit if it does not have the latest software (see page 15-6), or substitute a known-good SH-AWD control unit and recheck (see page 15-71). If the symptom/indication goes away with the updated SH-AWD control unit, troubleshooting is complete. If the symptom/indication goes away with a known-good SH-AWD control unit, replace the original SH-AWD control unit (see page 15-71).■

Protected by AR



## DTC Troubleshooting (cont'd)

### DTC 57-2: Right Clutch Electromagnetic Coil (Short)

NOTE: Before you troubleshoot, review the general troubleshooting information (see page 15-4).

1. Turn the ignition switch ON (II).
2. Clear the DTC with the HDS.
3. Do the clutch function test with the HDS (see page 15-68).
4. Check for DTCs with the HDS.

   *Is DTC 57-2 indicated?*

   **YES**—Go to step 5.

   **NO**—Intermittent failure, the system is OK at this time.■

5. Turn the ignition switch OFF.
6. Disconnect SH-AWD control unit connector B (8P) and the right solenoid 4P connector.
7. Check for continuity between SH-AWD control unit connector terminals B4 and B5.

**SH-AWD CONTROL UNIT CONNECTOR B (8P)**

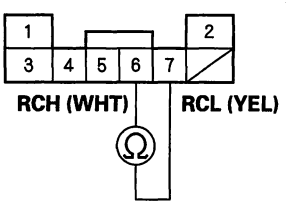


Wire side of female terminals

*Is there continuity?*

**YES**—Repair short in the wires between SH-AWD control unit connector terminals B6 and B7.

**NO**—Go to step 8.

8. Turn the ignition switch ON (II).
9. Measure voltage between SH-AWD control unit connector terminal B6 and body ground.

**SH-AWD CONTROL UNIT CONNECTOR B (8P)**

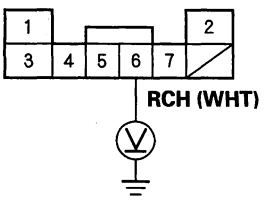


Wire side of female terminals

*Is there battery voltage?*

**YES**—Repair short to power in the wires between SH-AWD control unit connector terminal B6 and right clutch electromagnetic coil.■

**NO**—Go to step 10.

10. Turn the ignition switch OFF.
11. Reconnect all connectors.
12. Turn the ignition switch ON (II).



BACK

Protected by AR

13. Check the REAR DIFFERENTIAL FLUID TEMPERATURE in the DATA LIST is above 68 °F (20 °C) with the HDS before proceeding to the next step. If the temperature is below 68 °F (20 °C), drive the vehicle to warm up the rear differential until the fluid temperature becomes above 68 °F (20 °C).

14. Turn the ignition switch OFF.

15. Disconnect the right solenoid 4P connector.

16. Measure resistance between right solenoid 4P connector terminals No. 1 and No. 2.

**RIGHT SOLENOID 4P CONNECTOR**

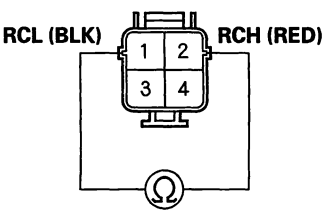


Wire side of male terminals

*Is there 0.45 Ω or less?*

**YES**—Replace the rear differential right side case (see page 15-88). ■

**NO**—Update the SH-AWD control unit if it does not have the latest software (see page 15-6), or substitute a known-good SH-AWD control unit and recheck (see page 15-71). If the symptom/indication goes away with the updated SH-AWD control unit, troubleshooting is complete. If the symptom/indication goes away with a known-good SH-AWD control unit, replace the original SH-AWD control unit (see page 15-71). ■

Protected by AR



## DTC Troubleshooting (cont'd)

### DTC 76-1: Rear Differential Fluid Overheats

NOTE:
- Before you troubleshoot, review the general troubleshooting information (see page 15-4).
- When the temperature of the rear differential fluid is abnormally high, the SH-AWD indicator comes on. This is not necessarily a problem, but DTC 76-1 will be stored.
- Check the rear differential fluid level (see page 15-69). If it's low, refill it, clear the DTC, and recheck.

1. Turn the ignition switch ON (II).
2. Check for DTCs in the VSA system with the HDS.

   *Are any VSA System DTCs indicated?*

   **YES**—Go to the indicated DTC's troubleshooting.

   **NO**—Go to step 3.
3. Clear the DTC with the HDS.
4. Start the engine.
5. Test-drive the vehicle at 10 mph (15 km/h).
6. Check for WHEEL SPEED in the DATA LIST with the HDS.

   *Are all wheel speed the same?*

   **YES**—Intermittent failure, the system is OK at this time.■

   **NO**—Go to step 7.
7. Turn the ignition switch OFF.
8. Check for rear brake drag.

   *Are the rear brakes OK?*

   **YES**—Update the SH-AWD control unit if it does not have the latest software (see page 15-6), or substitute a known-good SH-AWD control unit and recheck (see page 15-71). If the symptom/indication goes away with the updated SH-AWD control unit, troubleshooting is complete. If the symptom/indication goes away with a known-good SH-AWD control unit, replace the original SH-AWD control unit (see page 15-71).■

   **NO**—Repair the rear brakes (see page 19-3).■



BACK

Protected by AR

## **DTC 77-1:** Communication Error with the Power Control Module (PCM)

NOTE: Before you troubleshoot, review the general troubleshooting information (see page 15-4).

1. Turn the ignition switch ON (II).
2. Clear the DTC with the HDS.
3. Start the engine.
4. Check for DTCs with the HDS.

   *Is DTC 77-1 indicated?*

   **YES**—Go to step 5.

   **NO**—Intermittent failure, the system is OK at this time.■

5. Check for DTCs in the PGM-FI system with the HDS.

   *Are any PGM-FI system DTCs indicated?*

   **YES**—Go to the indicated DTC's troubleshooting.■

   **NO**—Update the SH-AWD control unit if it does not have the latest software (see page 15-6), or substitute a known-good SH-AWD control unit and recheck (see page 15-71). If the symptom/indication goes away with the updated SH-AWD control unit, troubleshooting is complete. If the symptom/indication goes away with a known-good SH-AWD control unit, replace the original SH-AWD control unit (see page 15-71).■

## **DTC 77-2:** Communication Error with the VSA Modulator-Control Unit

NOTE: Before you troubleshoot, review the general troubleshooting information (see page 15-4).

1. Turn the ignition switch ON (II).
2. Clear the DTC with the HDS.
3. Start the engine.
4. Check for DTCs with the HDS.

   *Is DTC 77-2 indicated?*

   **YES**—Go to step 5.

   **NO**—Intermittent failure, the system is OK at this time.■

5. Check for DTCs in the VSA system with the HDS.

   *Are any VSA system DTCs indicated?*

   **YES**—Go to the indicated DTC's troubleshooting.■

   **NO**—Update the SH-AWD control unit if it does not have the latest software (see page 15-6), or substitute a known-good SH-AWD control unit and recheck (see page 15-71). If the symptom/indication goes away with the updated SH-AWD control unit, troubleshooting is complete. If the symptom/indication goes away with a known-good SH-AWD control unit, replace the original SH-AWD control unit (see page 15-71).■

Protected by AR



## DTC Troubleshooting (cont'd)

### DTC 77-4: Communication Error with the Automatic-Transmission Control Unit

NOTE: Before you troubleshoot, review the general troubleshooting information (see page 15-4).

1. Turn the ignition switch ON (II).
2. Clear the DTC with the HDS.
3. Start the engine.
4. Check for DTCs with the HDS.

   *Is DTC 77-4 indicated?*

   **YES**—Go to step 5.

   **NO**—Intermittent failure, the system is OK at this time.■

5. Check for DTCs in the A/T system with the HDS.

   *Are any A/T system DTCs indicated?*

   **YES**—Go to the indicated DTC's troubleshooting.■

   **NO**—Update the SH-AWD control unit if it does not have the latest software (see page 15-6), or substitute a known-good SH-AWD control unit and recheck (see page 15-71). If the symptom/indication goes away with the updated SH-AWD control unit, troubleshooting is complete. If the symptom/indication goes away with a known-good SH-AWD control unit, replace the original SH-AWD control unit (see page 15-71).■



BACK

Protected by AR

## DTC 77-5: Yaw rate-Lateral Acceleration Sensor Malfunction

NOTE: Before you troubleshoot, review the general troubleshooting information (see page 15-4).

1. Turn the ignition switch ON (II).
2. Clear the DTC with the HDS.
3. Start the engine.
4. Check for DTCs with the HDS.

   *Is DTC 77-5 indicated?*

   **YES**—Go to step 5.

   **NO**—Intermittent failure, the system is OK at this time.■

5. Check for DTCs in the VSA system with the HDS.

   *Are any yaw rate-lateral acceleration sensor DTCs indicated?*

   **YES**—Go to the indicated DTC's troubleshooting.■

   **NO**—Update the SH-AWD control unit if it does not have the latest software (see page 15-6), or substitute a known-good SH-AWD control unit and recheck (see page 15-71). If the symptom/indication goes away with the updated SH-AWD control unit, troubleshooting is complete. If the symptom/indication goes away with a known-good SH-AWD control unit, replace the original SH-AWD control unit (see page 15-71).■

## DTC 77-6: Steering Angle Sensor Malfunction

NOTE: Before you troubleshoot, review the general troubleshooting information (see page 15-4).

1. Turn the ignition switch ON (II).
2. Clear the DTC with the HDS.
3. Start the engine.
4. Check for DTCs with the HDS.

   *Is DTC 77-6 indicated?*

   **YES**—Go to step 5.

   **NO**—Intermittent failure, the system is OK at this time.■

5. Check for DTCs in the VSA system with the HDS.

   *Are any steering angle sensor DTCs indicated?*

   **YES**—Go to the indicated DTC's troubleshooting.■

   **NO**—Update the SH-AWD control unit if it does not have the latest software (see page 15-6), or substitute a known-good SH-AWD control unit and recheck (see page 15-71). If the symptom/indication goes away with the updated SH-AWD control unit, troubleshooting is complete. If the symptom/indication goes away with a known-good SH-AWD control unit, replace the original SH-AWD control unit (see page 15-71).■

Protected by AR



## DTC Troubleshooting (cont'd)

### **DTC 78-xx:** SH-AWD Control Unit Self-Diagnostic Malfunction

NOTE: Before you troubleshoot, review the general troubleshooting information (see page 15-4).

1. Clear the DTC with the HDS.
2. Turn the ignition switch ON (II).
3. Check for DTCs with the HDS.

   *Is DTC 78-xx indicated?*

   **YES**—Update the SH-AWD control unit if it does not have the latest software (see page 15-6), or substitute a known-good SH-AWD control unit and recheck (see page 15-71). If the symptom/indication goes away with the updated SH-AWD control unit, troubleshooting is complete. If the symptom/indication goes away with a known-good SH-AWD control unit, replace the original SH-AWD control unit (see page 15-71).■

   **NO**—Intermittent failure, the system is OK at this time.■

### **DTC 81-1:** Left Search Coil Sensor (Open or Short)

NOTE: Before you troubleshoot, review the general troubleshooting information (see page 15-4).

1. Disconnect SH-AWD control unit connector A (20P).
2. Check for continuity between SH-AWD control unit connector terminals A1 and A11.

**SH-AWD CONTROL UNIT CONNECTOR A (20P)**

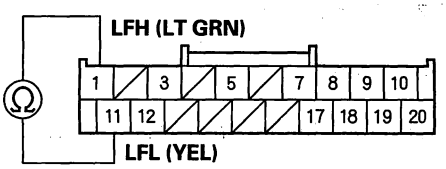


Wire side of female terminals

*Is there continuity?*

**YES**—Go to step 3.

**NO**—Go to step 6.

3. Check the REAR DIFFERENTIAL FLUID TEMPERATURE in the DATA LIST is above 68 °F (20 °C) with the HDS before proceeding to the next step. If the temperature is below 68 °F (20 °C), drive the vehicle to warm up the rear differential until the fluid temperature becomes above 68 °F (20 °C).



BACK

Protected by AR

4. Measure resistance between SH-AWD control unit connector terminals A1 and A11.

**SH-AWD CONTROL UNIT CONNECTOR A (20P)**

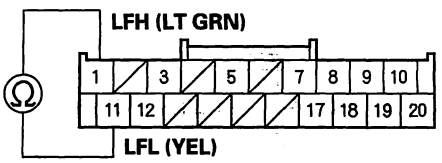


Wire side of female terminals

*Is there 2.0 Ω or more?*

**YES**—Go to step 5.

**NO**—Go to step 7.

5. Check for continuity between SH-AWD control unit connector terminal A1 and body ground.

**SH-AWD CONTROL UNIT CONNECTOR A (20P)**

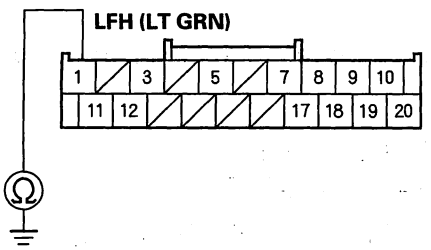


Wire side of female terminals

*Is there continuity?*

**YES**—Repair short in the wire between SH-AWD control unit connector terminal A1 and body ground. ■

**NO**—Check for loose connector terminals at the SH-AWD control unit and repair if necessary. If the connections are OK, update the SH-AWD control unit if it does not have the latest software (see page 15-6), or substitute a known-good SH-AWD control unit and recheck (see page 15-71). If the symptom/indication goes away with the updated SH-AWD control unit, troubleshooting is complete. If the symptom/indication goes away with a known-good SH-AWD control unit, replace the original SH-AWD control unit (see page 15-71). ■

(cont'd)

Protected by AR



## DTC Troubleshooting (cont'd)

6. Connect a jumper wire between SH-AWD control unit connector terminals A1 and A11. Disconnect the left solenoid 4P connector, then check for continuity between left solenoid 4P connector terminals No. 3 and No. 4.

**SH-AWD CONTROL UNIT CONNECTOR A (20P)**

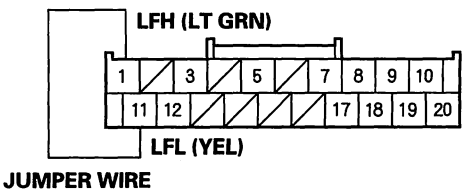


Wire side of female terminals

**LEFT SOLENOID 4P CONNECTOR**

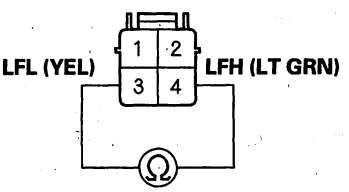


Wire side of female terminals

*Is there continuity?*

**YES**—Replace the rear differential left side case (see page 15-88).■

**NO**—Repair open in the wire between left solenoid 4P connector terminals No. 3 and No. 4.■

7. Disconnect the left solenoid 4P connector.

8. Check for continuity between left solenoid 4P connector terminals No. 3 and No. 4.

**LEFT SOLENOID 4P CONNECTOR**

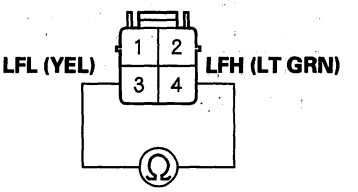


Wire side of female terminals

*Is there continuity?*

**YES**—Repair short in the wires between the SH-AWD control unit connector A and the left search coil connector.■

**NO**—Replace the rear differential left side case (see page 15-88).■



BACK

Protected by AR

## DTC 82-1: Right Search Coil Sensor (Open or Short)

NOTE: Before you troubleshoot, review the general troubleshooting information (see page 15-4).

1. Disconnect SH-AWD control unit connector A (20P).
2. Check for continuity between SH-AWD control unit connector terminals A3 and A12.

**SH-AWD CONTROL UNIT CONNECTOR A (20P)**

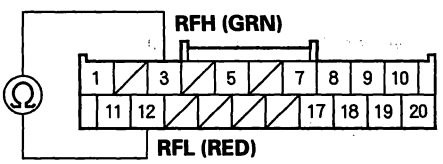


Wire side of female terminals

*Is there continuity?*

**YES**—Go to step 3.

**NO**—Go to step 6.

3. Check the REAR DIFFERENTIAL FLUID TEMPERATURE in the DATA LIST is above 68 °F (20 °C) with the HDS before proceeding to the next step. If the temperature is below 68 °F (20 °C), drive the vehicle to warm up the rear differential until the fluid temperature becomes above 68 °F (20 °C).
4. Measure resistance between SH-AWD control unit connector terminals A3 and A12.

**SH-AWD CONTROL UNIT CONNECTOR A (20P)**

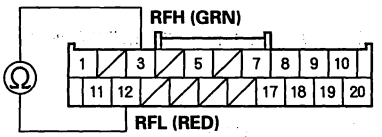


Wire side of female terminals

*Is there 2.0 Ω or more?*

**YES**—Go to step 5.

**NO**—Go to step 7.

5. Check for continuity between SH-AWD control unit connector terminal A3 and body ground.

**SH-AWD CONTROL UNIT CONNECTOR A (20P)**

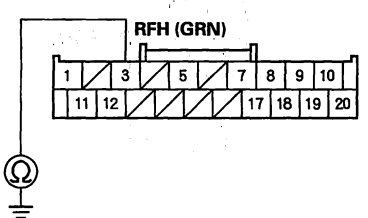


Wire side of female terminals

*Is there continuity?*

**YES**—Repair short in the wire between SH-AWD control unit connector terminal A3 and body ground. ■

**NO**—Check for loose connector terminals at the SH-AWD control unit and repair if necessary. If the connectios are OK, update the SH-AWD control unit if it does not have the latest software (see page 15-6), or substitute a known-good SH-AWD control unit and recheck (see page 15-71). If the symptom/indication goes away with the updation SH-AWD control unit, troubleshooting is complete. If the symptom/indication goes away with a known-good SH-AWD control unit, replace the original SH-AWD control unit (see page 15-71). ■

(cont'd)

Protected by AR



## DTC Troubleshooting (cont'd)

6. Connect a jumper wire between SH-AWD control unit connector terminals A3 and A12. Disconnect the right solenoid 4P connector, then check for continuity between right solenoid 4P connector terminals No. 3 and No. 4.

**SH-AWD CONTROL UNIT CONNECTOR A (20P)**

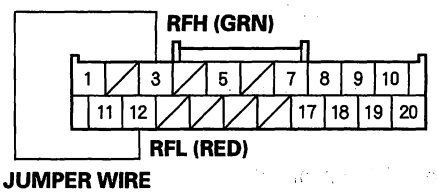


Wire side of female terminals

**RIGHT SOLENOID 4P CONNECTOR**

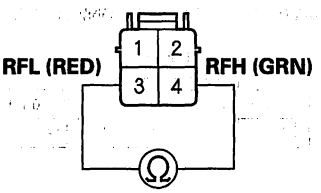


Wire side of female terminals

*Is there continuity?*

**YES**—Replace the rear differential right side case (see page 15-88).■

**NO**—Repair open in the wires between right solenoid 4P connector terminals No. 3 and No. 4.■

7. Disconnect the right solenoid 4P connector, then check for continuity between right solenoid 4P connector terminals No. 3 and No. 4.

**RIGHT SOLENOID 4P CONNECTOR**

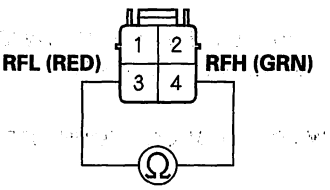


Wire side of female terminals

*Is there continuity?*

**YES**—Repair short to ground in the wires between SH-AWD control unit connector A and the right search coil sensor connector.■

**NO**—Replace the rear differential right side case (see page 15-88).■



BACK

Protected by AR

## **DTC 91-1:** SH-AWD Control Unit Programminng Error

NOTE:
- Before you troubleshoot, review the general troubleshooting information (see page 15-4).
- DTC 91-1 is stored when the SH-AWD system update is not completed.
- Do not turn the ignition switch OFF while updating the SH-AWD system. If you turn the ignition switch OFF before completion, the SH-AWD system can be damaged.

1. Do the SH-AWD system update procedure (see page 15-7).

2. Check for DTCs with the HDS.

   *Is DTC 91-1 indicated?*

   **YES**—Substitute a known-good SH-AWD control unit and recheck (see page 15-71). If the symptom/indication goes away with a known-good SH-AWD control unit, replace the original SH-AWD control unit (see page 15-71).■

   **NO**—Update is complete.■

Protected by AR



## Symptom Troubleshooting

### The SH-AWD indicator does not go off, and no DTCs are stored

NOTE:
- Before you troubleshoot, review the general troubleshooting information (see page 15-4).
- Make sure the No. 1 (30 A) fuse in the under-hood fuse/relay box is OK.
- Make sure there are no loose connector terminals at the SH-AWD control unit.
- Make sure the charging system is OK.
- Make sure the PGM-FI system and the A/T system is not in the middle of updating.

1. Test the battery (see page 22-63). Charge or replace the battery if necessary.

2. Check the COMPLETE MEMORIZATION in the DATA LIST with the HDS.

   *Does the data list show "complete"?*

   **YES**—Go to step 3.

   **NO**—Do the SH-AWD system memorization procedure (see page 15-7), then go to step 3.

3. Check for DTCs in the VSA system with the HDS.

   *Are any steering angle sensor DTCs indicated?*

   **YES**—Go to the indicated DTC's troubleshooting. ■

   **NO**—Go to step 4.

4. Start the engine.

5. Check the SH-AWD indicator value with the HDS.

   *Is the SH-AWD indicator value OFF?*

   **YES**—Go to the gauge control system DTC troubleshooting (see page 22-269).

   **NO**—Update the SH-AWD control unit if it does not have the latest software (see page 15-6), or substitute a known-good SH-AWD control unit and recheck (see page 15-71). If the symptom/indication goes away with the updated SH-AWD control unit, troubleshooting is complete. If the symptom/indication goes away with a known-good SH-AWD control unit, replace the original SH-AWD control unit (see page 15-71). ■



BACK

Protected by AR

## The SH-AWD indicator does not come on

NOTE: Before you troubleshoot, review the general troubleshooting information (see page 15-4).

1. Turn the ignition switch ON (II).

2. Check the SH-AWD indicator.

   *Does the SH-AWD indicator come on and go off?*

   **YES**—Intermittent failure, the system is OK at this time.■

   **NO**—Go to step 3.

3. Turn the ignition switch OFF.

4. Disconnect SH-AWD control unit connector A (20P) and B (8P).

5. Turn the ignition switch ON (II).

6. Check the SH-AWD indicator.

   *Does the SH-AWD indicator come on?*

   **YES**—Update the SH-AWD control unit if it does not have the latest software (see page 15-6), or substitute a known-good SH-AWD control unit and recheck (see page 15-71). If the symptom/indication goes away with the updated SH-AWD control unit, troubleshooting is complete. If the symptom/indication goes away with a known-good SH-AWD control unit, replace the original SH-AWD control unit (see page 15-71).■

   **NO**—Go to the gauge control system troubleshooting (see page 22-269).■

Protected by AR



## SH-AWD Function Test

**Special Tools Required**
Torque Wrench Adapter 070AJ-SJAA101

### Direct Electromagnetic Clutch Test

NOTE:
- No DTC was detected.
- The shift lever is in N.
- The SH-AWD control unit had been initialized.
- The tire pressures are at the specified value.
- Tire size and wear are the same between the left and right tires.

1. Check that the differential fluid temperature is over 68 °F (20 °C) with the HDS. If it is below 68 °F (20 °C), raise the temperature by driving the vehicle in circles or by constantly turning.

2. Raise the vehicle, and make sure it is securely supported.

3. Remove the rear wheels.

4. Connect the HDS to the DLC.

5. Do the direct electromagnetic clutch test with the HDS.

6. Install the torque wrench adapter on the rear wheel hub.

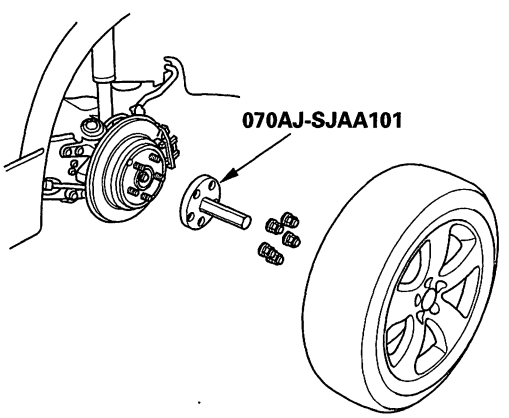


7. Install a torque wrench on the special tool as shown on the HDS. Write down the torque value while slowly rotating the rear hub with the torque wrench as shown. (Turn the hub no more than 90 degrees in 7 to 10 seconds).

   NOTE: Use a torque wrench capable of measuring up to 80 kg·m (580 lbf·ft) such as a commercially available Snap-on torque wrench TE352FUE.

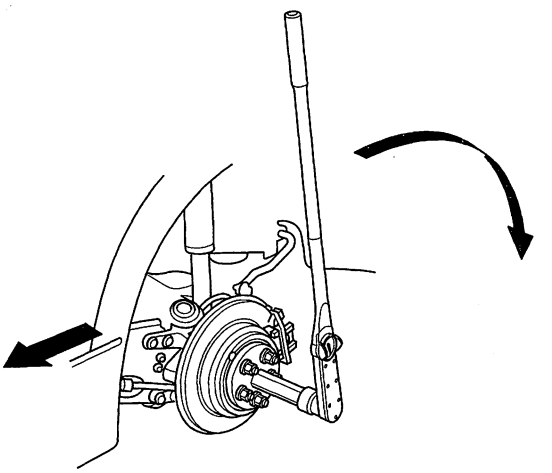

8. Enter the torque value into the HDS, and wait for the test to finish.

   - If the result shows the clutch driving force is normal, the clutch assembly is OK.
   - If the result shows the clutch driving force is abnormal, replace the differential fluid, and retest. If the result still shows the clutch driving force is abnormal, replace the right and left differential side case (see page 15-88).



BACK

Protected by AR

# Rear Differential Fluid Inspection and Replacement

## Inspection

1. Park the vehicle on level ground, and turn the ignition switch to LOCK (0).

2. Use solvent and a brush to wash any oil and dirt off the differential fluid inspection oil filter plugs.

3. Remove the filler plug (A) and the sealing washer (B), then check the condition of the fluid, and make sure the fluid is at the proper level (C).

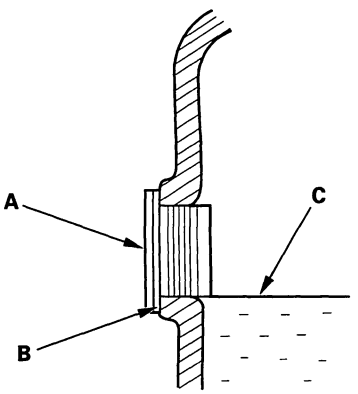


4. The fluid level must reach up the bottom of the filler plug hole. If it is below the hole, add the recommended fluid until it runs out, then reinstall the filler plug with a new sealing washer.

## Replacement

1. Park the vehicle on level ground, and turn the ignition switch to LOCK (0).

2. Remove the filler plug (A) and the sealing washer (B).

**Fluid Capacity**
**2.53 L (2.67 US qt, 2.23 Imp qt) at fluid change**
**2.77 L (2.93 US qt, 2.44 Imp qt) at overhaul**

**Recommended fluid: Honda ATF-Z1**

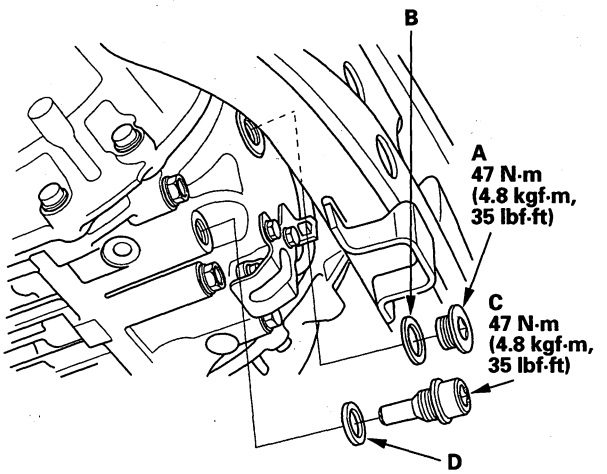


3. Remove the drain plug (C) and the sealing washer (D), and drain the fluid.

4. Reinstall the drain plug with a new sealing washer (D).

5. Add fluid until it reaches the bottom of the filler plug hole.

6. Reinstall the filler plug with a new sealing washer.

Protected by AR



## Rear Differential Fluid Temperature Sensor Replacement

1. Drain the differential fluid (see page 15-69).

2. Remove the differential fluid temperature sensor cover (A) and the differential fluid temperature sensor harness stay (B), then disconnect the differential fluid temperature sensor connector (C).

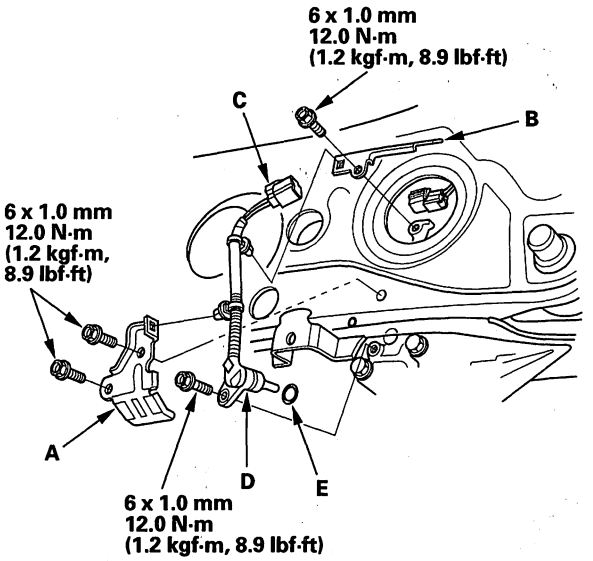


3. Remove the differential fluid temperature sensor (D).

4. Install the differential fluid temperature sensor with a new O-ring (E) in the reverse order of removal.

5. Refill the differential fluid (see page 15-69).



BACK

Protected by AR

## SH-AWD Control Unit Replacement

NOTE: The SH-AWD control unit must be initialized (see page 15-7). after replacement, otherwise the SH-AWD system will not function.

1. Remove the rear left side trim panel cover (A).

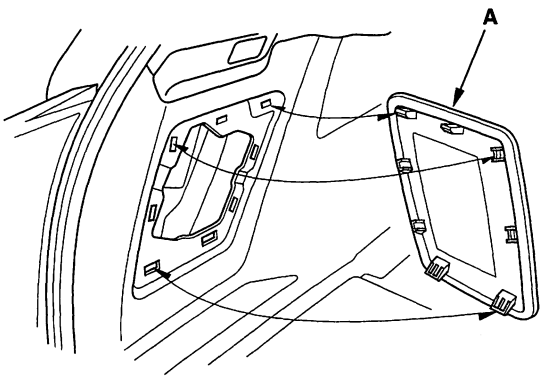


2. Loosen the SH-AWD control unit mounting bolts (A), then remove the SH-AWD control unit.

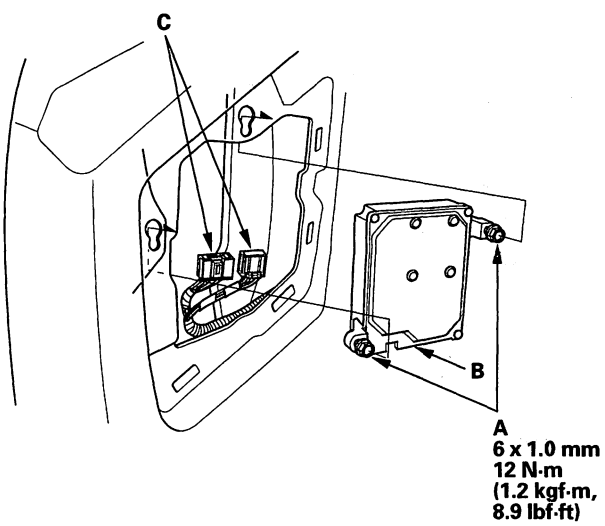


3. Disconnect the SH-AWD control unit connectors (C).

4. Install the SH-AWD control unit in the reverse order of removal.

## SH-AWD Relay Replacement

1. Remove the rear left side trim panel (see page 20-76).
2. Remove the SH-AWD relay (A).

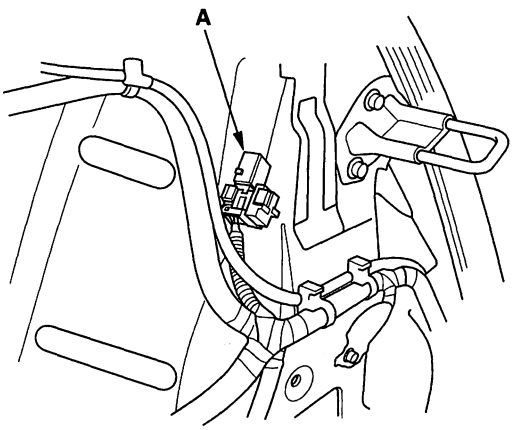


3. Install the SH-AWD relay in the reverse order of removal.

BACK

Protected by AR



## Rear Differential Mount Replacement

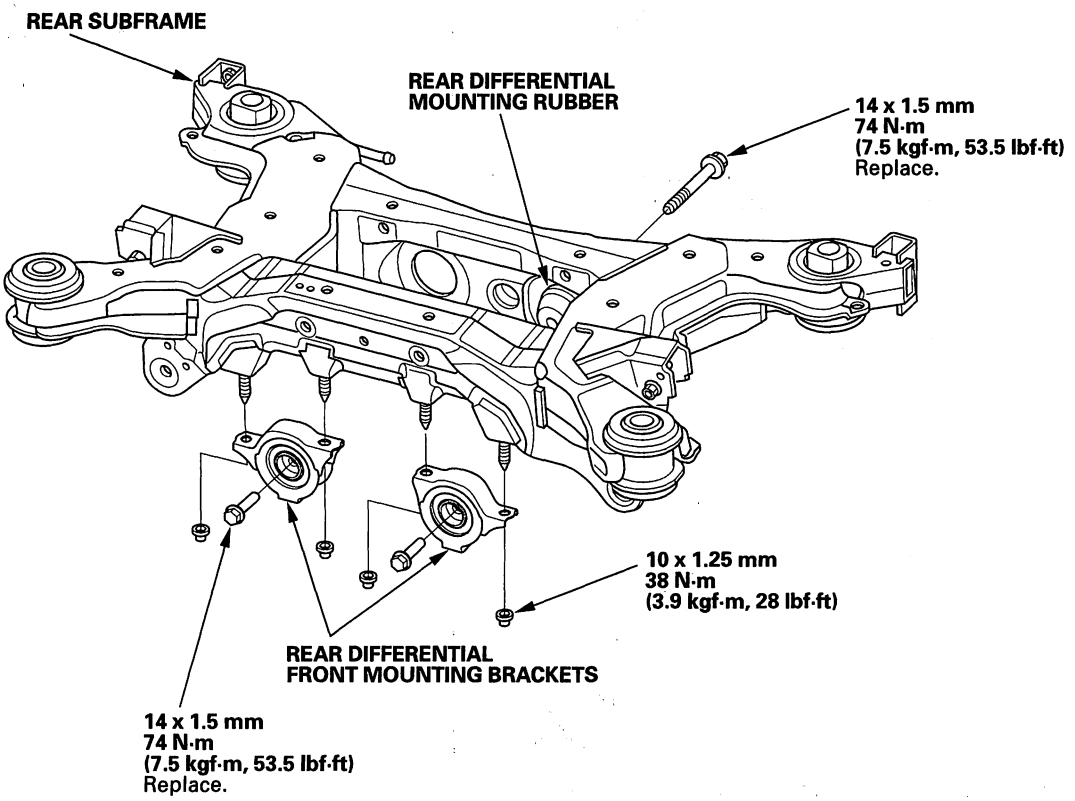




BACK

Protected by AR

# Rear Differential Removal

**Special Tools Required**
Driveshaft remover 07AAD-S3VA000

1. Drain the dfferential fluid (see page 15-69).

2. Remove the right rear driveshaft (see page 16-26).

3. Remove the exhaust pipe (A).

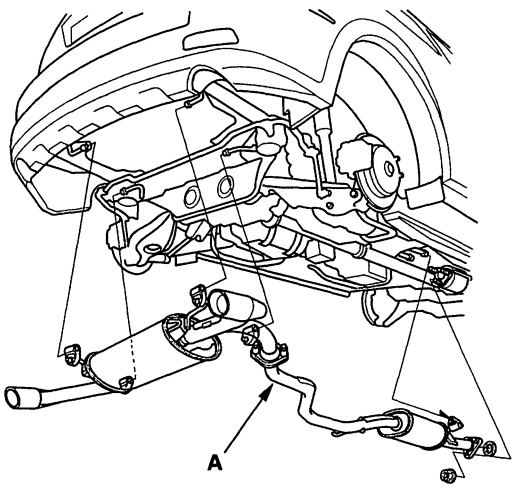


4. Make a reference mark (A) across the propeller shaft (B) and rear differential companion flange (C). Separate the propeller shaft from the rear differential.

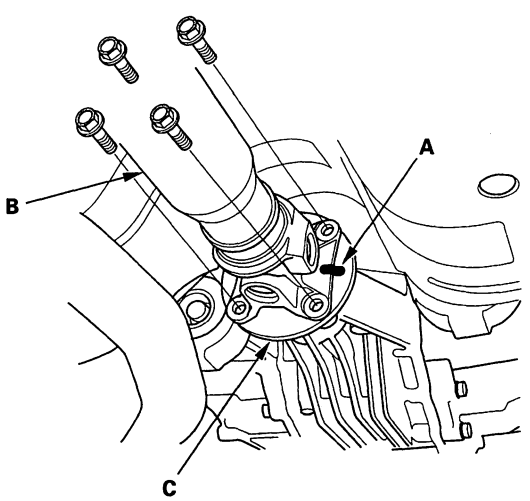


5. Place the transmission jack (A) under the rear differential (B).

6. Using the driveshaft remover and the hammer, and remove the left inboard joint (C) from the rear differential.

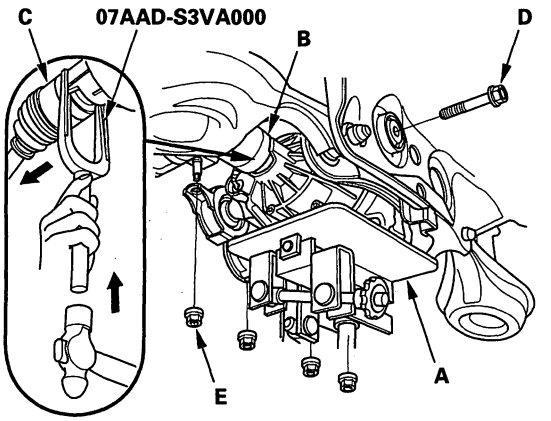


7. Remove the rear differential mounting bolt (D) and nuts (E).

8. Lower the rear differential a little on the transmission jack, then remove the left rear driveshaft inboard joint from the rear differential.

   NOTE: Make sure not to over extend the harness and the tube.

9. Disconnect the right clutch solenoid 4P connector (A) and the fluid temperature sensor 2P connector (B), then remove the harness clip (C).

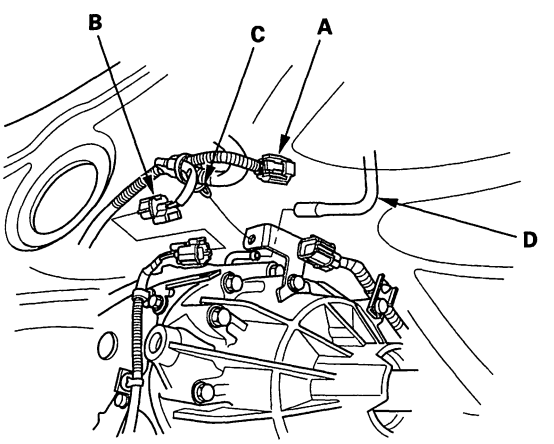


10. Disconnect the breather tube (D) from the rear differential.

(cont'd)

Protected by AR



## Rear Differential Removal (cont'd)

11. Lower the rear differential a little on the transmission jack.

    NOTE: Make sure not to over extend the harness.

12. Disconnect the left clutch solenoid 4P connector (A), then remove the harness clip (B).

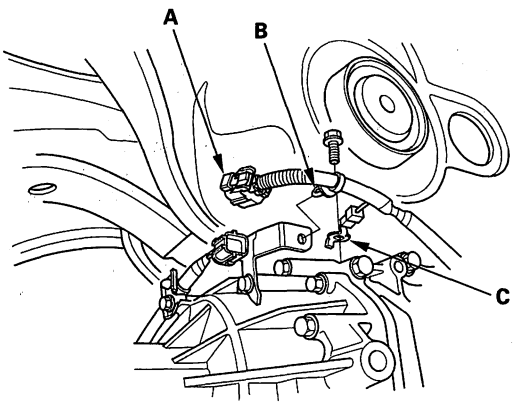


13. Disconnect the ground cable (C) from the rear differential.

14. Lower the rear differential on the transmission jack.

## Rear Differential Installation

1. Raise the rear differential with the tansmission jack.

2. If the original differential is being reinstalled, replace the set rings.

3. Raise the rear differential a little on the transmission jack.

4. Connect the ground cable (A) to the rear differential.

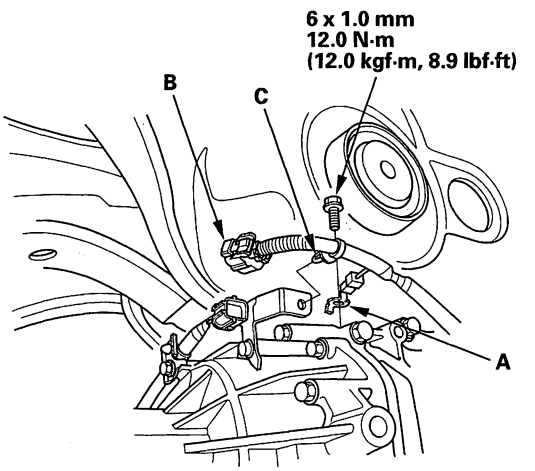


5. Connect the left clutch solenoid 4P connector (B), then install the harness clip (C).

6. Raise the rear differential a little on the transmission jack.

7. Connect the breather tube (A) to the rear differential.

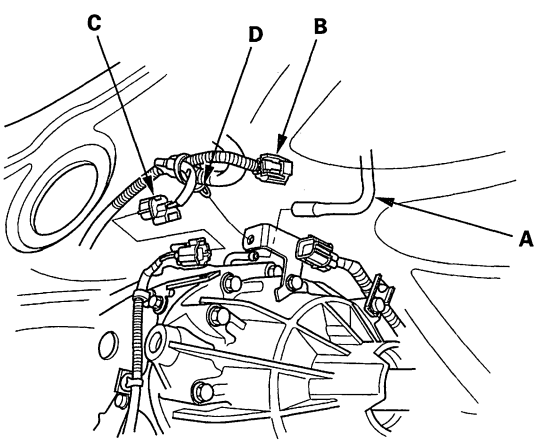


8. Connect the right clutch solenoid 4P connector (B) and the fluid temperature sensor 2P connector (C), then install the harness clip (D).



BACK

Protected by AR

9. Install the left rear driveshaft inboard joint (A) to the rear differential.

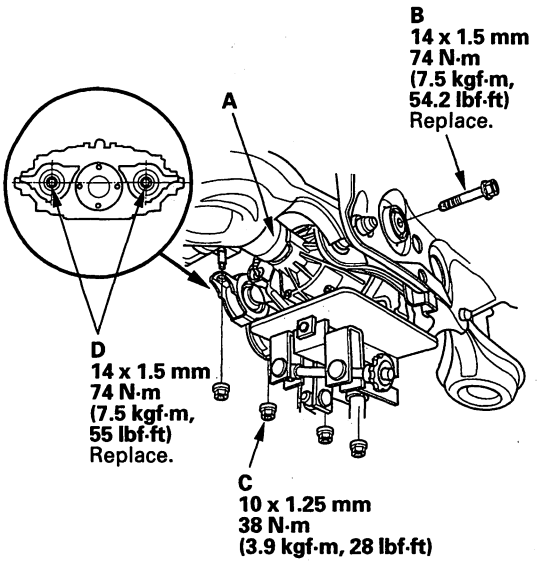


10. Raise the rear differential to the mounting level, then hand tighten the new rear differential rear mounting bolt (B) and rear differential front mounting nuts (C).

11. Loosen the differential front mounting bolts (D).

12. Tighten the new rear differential rear mounting bolt then tighten the rear differential front mounting nuts.

13. Tighten the rear differential front mounting bolts.

14. Attach the propeller shaft (A) to the rear differential (B) by aligning the reference marks (C) you made during the removal procedure.

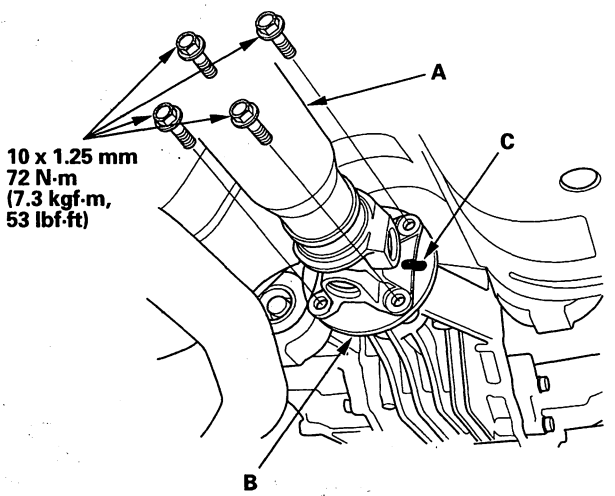


15. Install the new exhaust pipe gasket (A) and exhaust pipe (B).

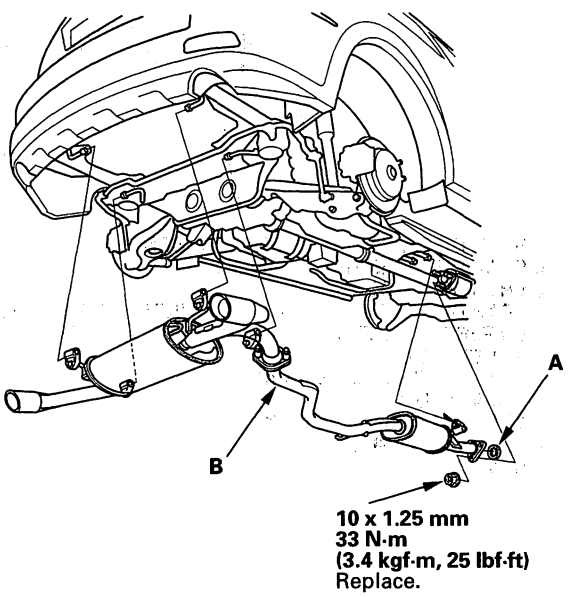


16. Install the right rear driveshaft (see page 16-35).

17. Refill the differential fluid (see page 15-69).

18. Check the wheel alignment, and adjust it if necessary (see page 18-5).

Protected by AR



## Rear Differential Disassembly/Reassembly

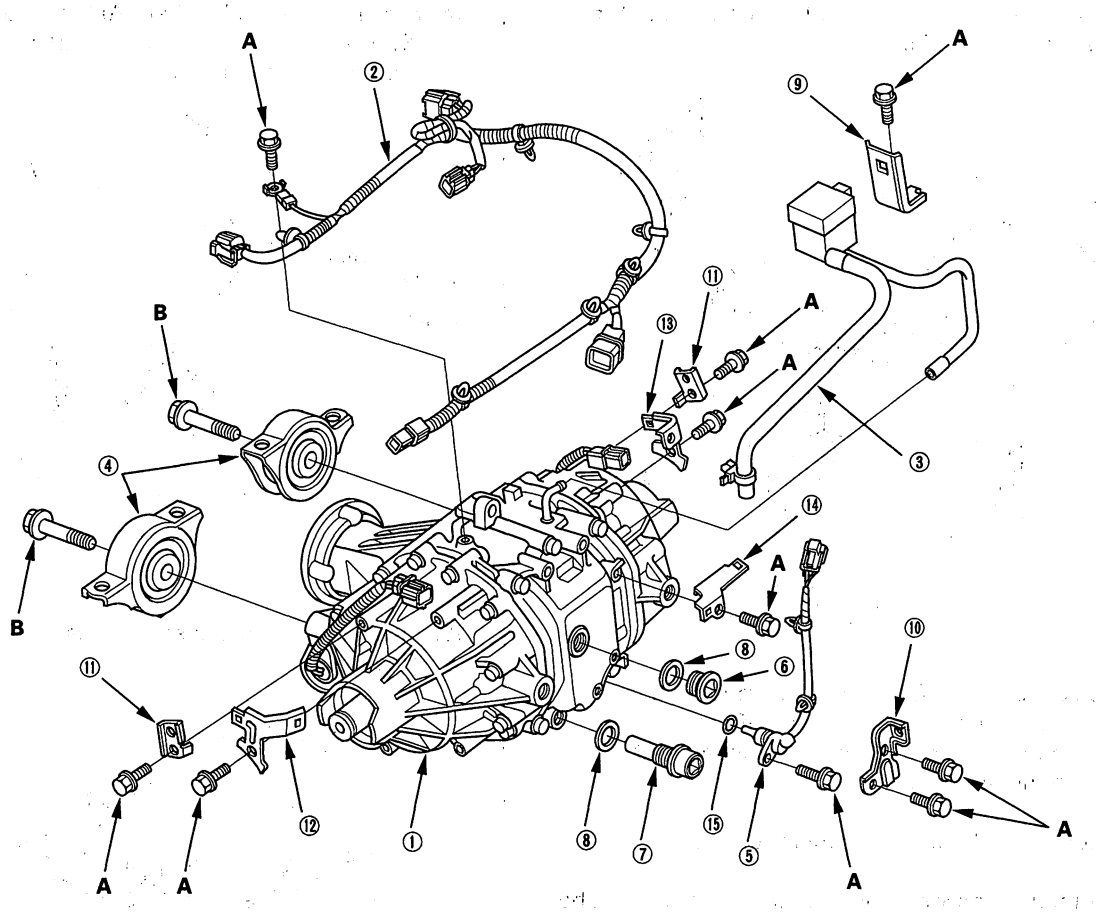


① REAR DIFFERENTIAL CARRIER ASSEMBLY
② REAR DIFFERENTIAL HARNESS
③ BREATHER HOSE
④ REAR DIFFERENTIAL FRONT MOUNTING BRACKETS
⑤ DIFFERENTIAL FLUID TEMPERATURE SENSOR
⑥ FILLER PLUG
47 N·m (4.8 kgf·m, 35 lbf·ft)
⑦ DRAIN PLUG
47 N·m (4.8 kgf·m, 35 lbf·ft)
⑧ SEALING WASHER
Replace.
⑨ BREATHER BRACKET
⑩ DIFFERENTIAL FLUID TEMPERATURE SENSOR COVER
⑪ REAR DIFFERENTIAL HARNESS BRACKET A
⑫ REAR DIFFERENTIAL HARNESS BRACKET B
⑬ REAR DIFFERENTIAL HARNESS BRACKET C
⑭ REAR DIFFERENTIAL HARNESS BRACKET D
⑮ O-RING
Replace.

A: 6 x 1.0 mm
12.0 N·m (1.2 kgf·m, 8.9 lbf·ft)
B: 14 x 1.5 mm
74 N·m (7.5 kgf·m, 54.2 lbf·ft)



BACK

Protected by AR

## Center Case Oil Seal Replacement

**Special Tools Required**
- Companion Flange Holder 07XAB-001A101
- Oil seal driver C 070AD-STK0130
- Fork seal driver weight 07747-0010100

1. Remove the rear differential (see page 15-73).

2. Remove the rear differential front mounting brackets (A) from the rear differential (B).

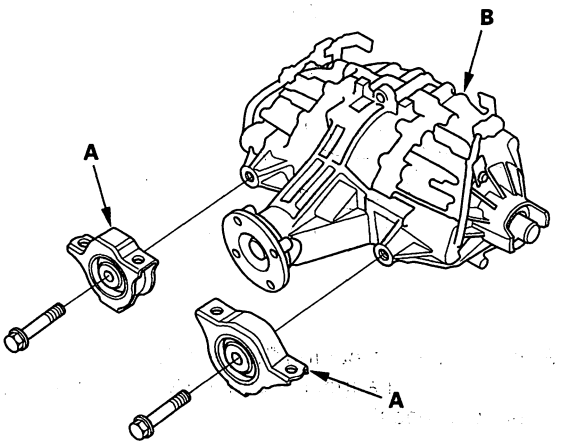


3. Remove the differential fluid temperature sensor cover (A), differential fluid temperature (B), O-ring (C), and rear differential harness bracket (D).

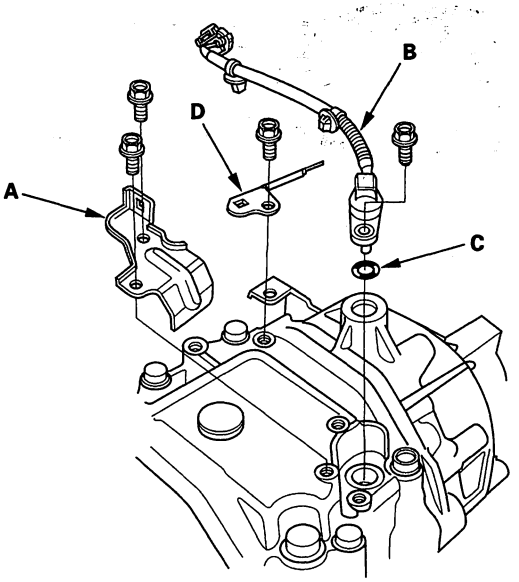


4. Remove the left side case (A), the right side case (B), the Four 10 x 12 mm dowel pins (C).

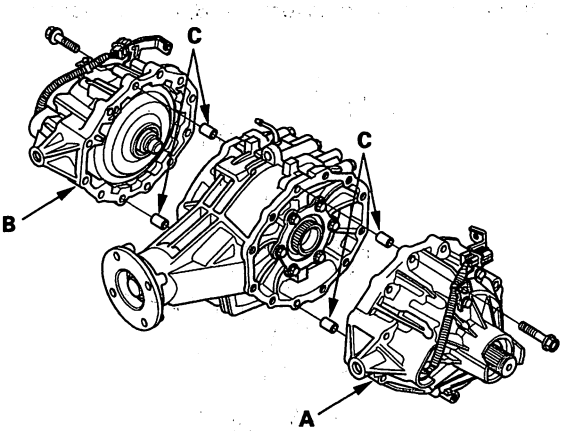


5. Remove the mounting bolts (A) in a crisscross pattern in several steps, then remove the bearing set plate (B) and the 83 mm shim (C).

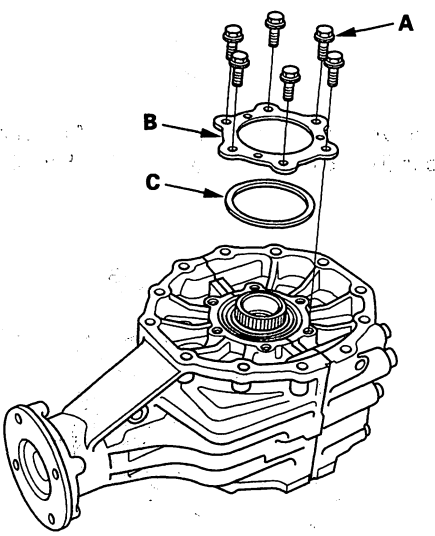


(cont'd)

Protected by AR



## Center Case Oil Seal Replacement (cont'd)

6. Remove the six mounting bolts (A) in a crisscross pattern in several steps, then remove the differential housing assembly (B) and dowel pins (C).

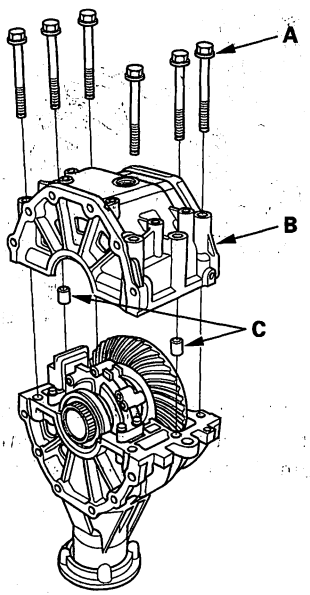


7. Remove the ring gear assembly (A), bearing outer races (B), 75 mm shim (C) and the 8 x 14 dowel pins (D).

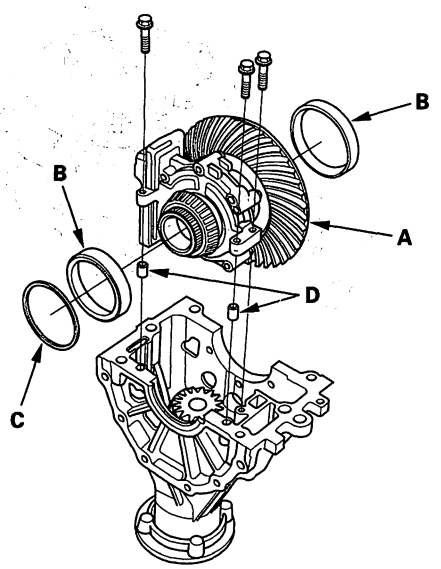


8. Raise the locknut tab (A) from the groove of the input shaft, making sure that the tab completely clears the groove to prevent damaging the input shaft.

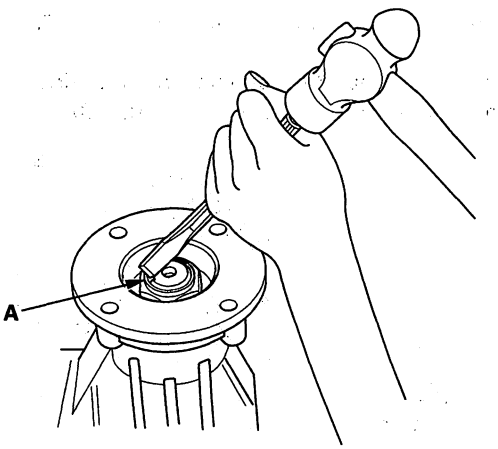


9. Install the companion flange holder on the companion flange. Loosen the 27 mm locknut (left-hand threads).

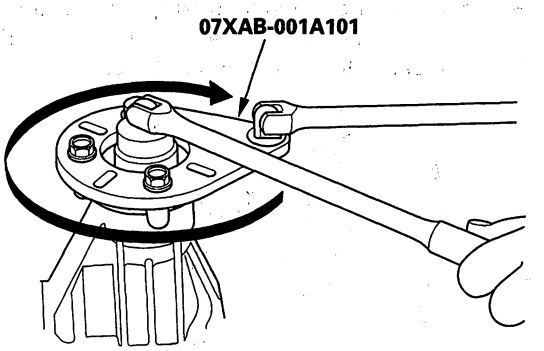




BACK

Protected by AR

10. Loosen the locknut (A) clockwise so that its tab (B) comes out from the groove (C) in the input shaft.

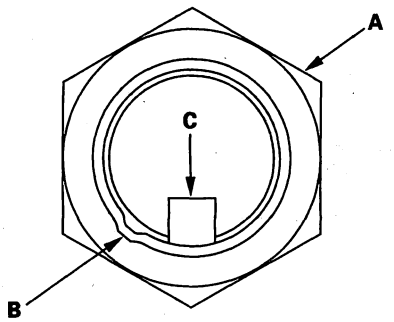


11. Tighten the locknut (A) until its tab (B) aligns with the goove (C).

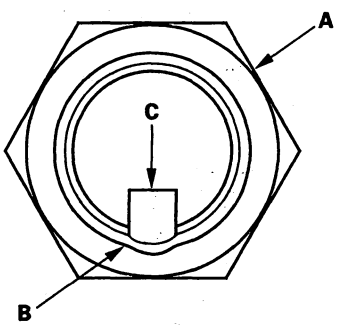


12. Remove any dirt from inside of the groove in the input shaft, then loosen the locknut.

13. Remove the 27 mm locknut (A), the 27 mm spring washer (B), the 28 mm back-up ring (C), and the 28 mm O-ring (D).

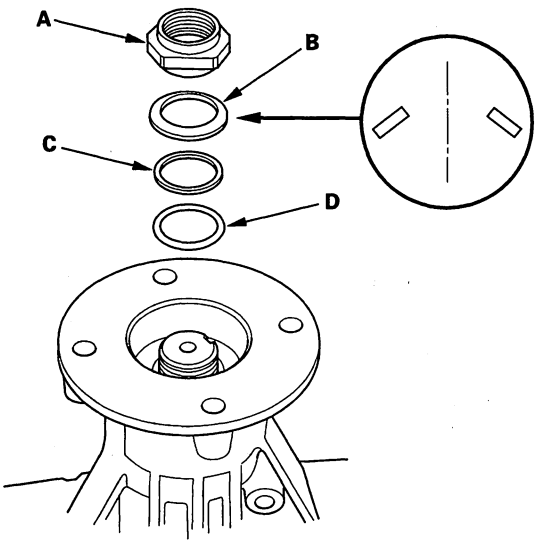


14. Make a reference mark (A) across the input shaft (B) and companion flange (C), then remove the companion flange.

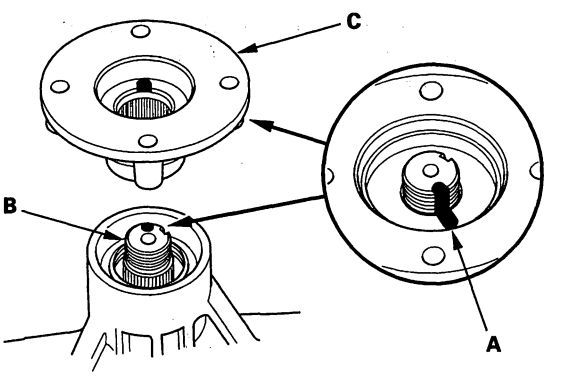


(cont'd)

Protected by AR



## Center Case Oil Seal Replacement (cont'd)

15. Remove the drive pinion (A), pinion spacer (B) and the thrust washer (C) by tapping on the drive pinion with a plastic hammer.

    NOTE: Support it by hand not to damage the drive pinion.

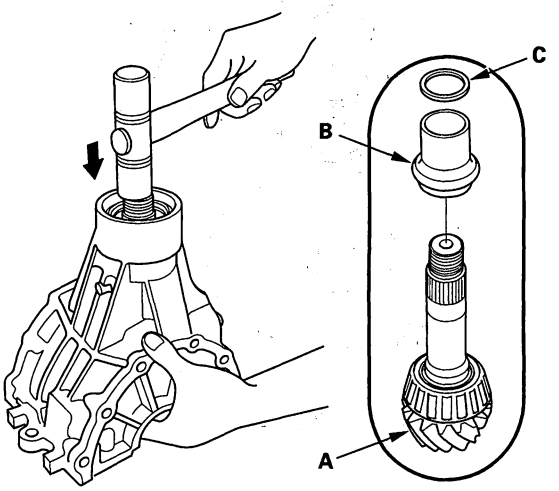


16. Remove the front case oil seal (A) with a commercially available tool.

    NOTE: Remove the oil seal with care so you do not damage the inside surface of the differential carrier seal surface.

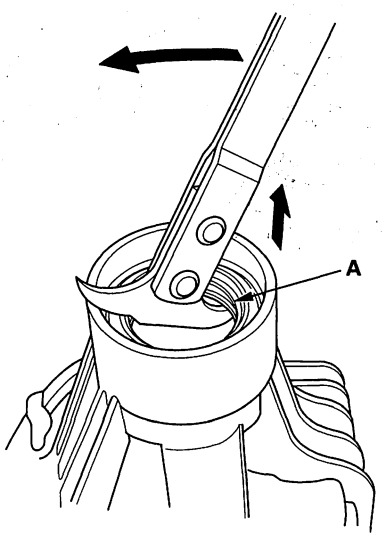


17. Apply ATF to the tapered roller bearing (A), then install the new front case oil seal (B) with the oil seal driver C and fork seal driver weight.

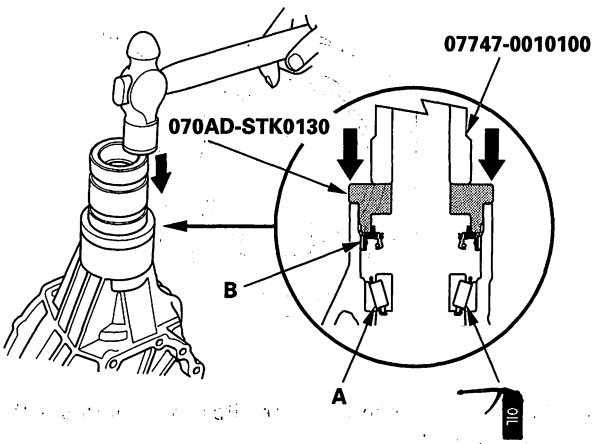


18. Apply ATF to the tapered roller bearing (A), then install the drive pinion (B), pinion spacer (C) and the thrust washer (D) into the differential carrier (E).

    NOTE: Be sure to install the pinion spacer in the direction shown.

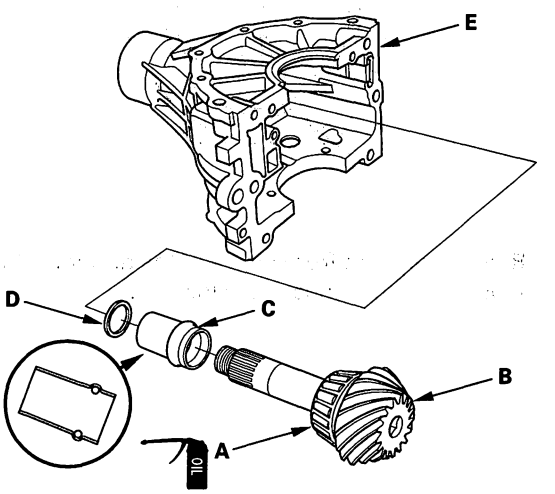




BACK

Protected by AR

19. Install the companion flange (A) on the input shaft (B) by aligning the reference mark (C).

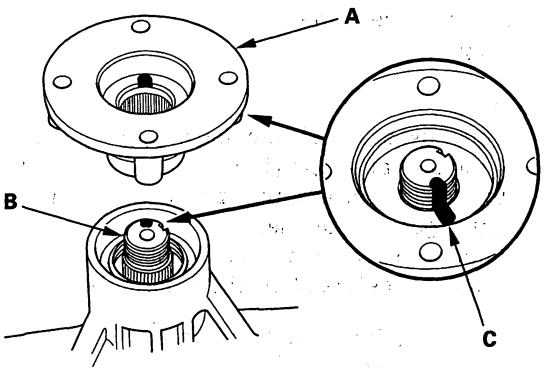


20. Apply ATF to the new 28 mm O-ring (A), then install the new 28 mm O-ring, the 28 mm backup ring (B), the 27 mm spring washer (C), and the new 27 mm locknut (D).

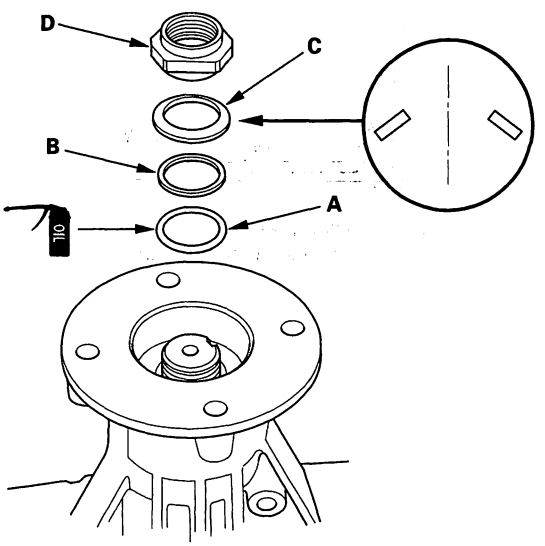


21. Install the companion flange holder the companion flange, then tighten the locknut (left-hand threads).

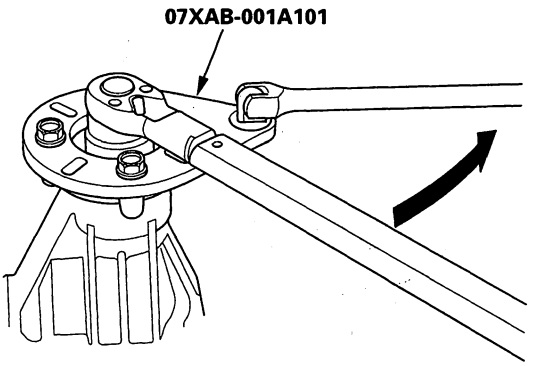


22. Rotate the drive pinion several times to assure proper tapered roller bearing contact. Measure the drive pinion turning torque.

- If the drive pinion turning torque exceeds the standard, replace the pinion spacer.
- If the drive pinion turning torque is less than the standard, adjust by tightening the locknut a little at a time, but keep the torque within 186—353 N·m (19.0—36.0 kgf·m, 137—260 lbf·ft). If this is not possible, replace the pinion spacer.

**Turning Torque:**
**93.2—181.4 N·m (9.5—18.5 kgf·cm, 69.0—134.0 lbf·in)**

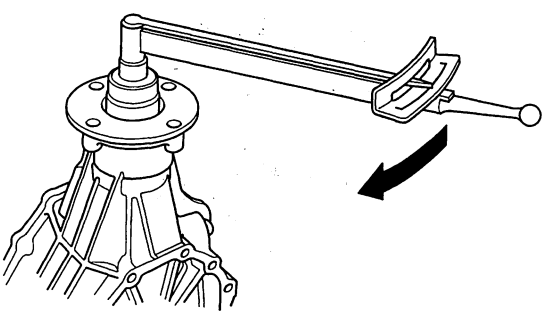

(cont'd)

BACK

Protected by AR



## Center Case Oil Seal Replacement (cont'd)

23. Stake the locknut tab (A) into the groove in the input shaft.

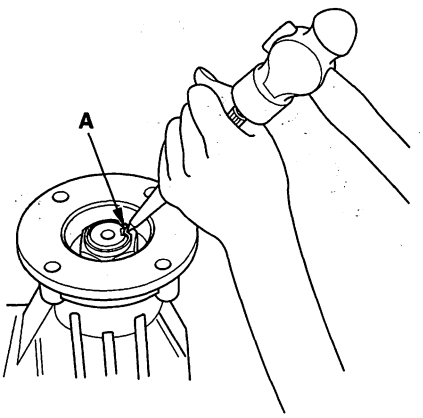


24. Apply ATF to the tapered roller bearings, then Install the ring gear assembly (A), bearing outer races (B), 75 mm shim (C) and the 8 x 14 dowel pins (D).

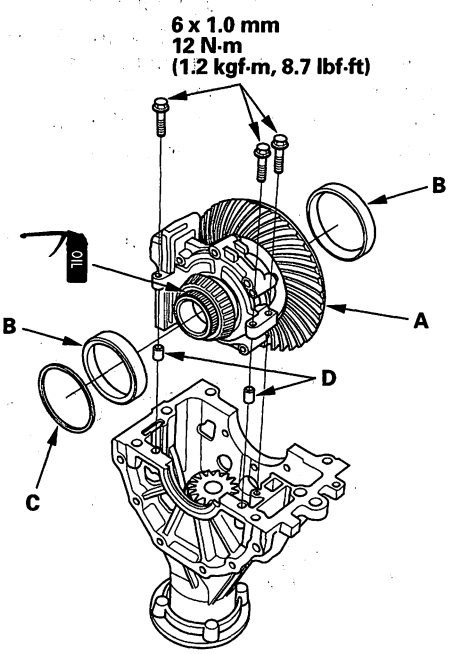


25. Remove the dirt and oil from the sealing surfaces. Apply liquid gasket (P/N 08718-0001) to the sealing surface. Make sure you seal the entire circumference of the bolt holes to prevent oil leakage.

NOTE:
- You must assemble the housings within do in 5 minutes after applying the liquid gasket. If not, the sealing surface must be cleaned, and the liquid gasket reapplied.
- Allow it to cure at least 30 minutes after assembly before filling the differential with fluid.

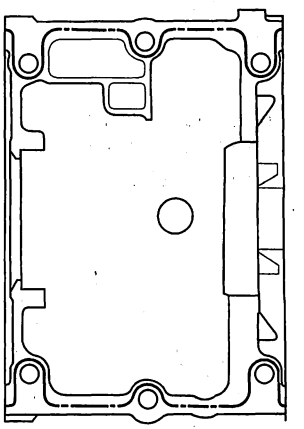

Apply liquid gasket along the broken line and around all bolt holes.



BACK

Protected by AR

26. Install the dowel pins (A), the differential housing assembly (B) and the six mounting bolts (C).

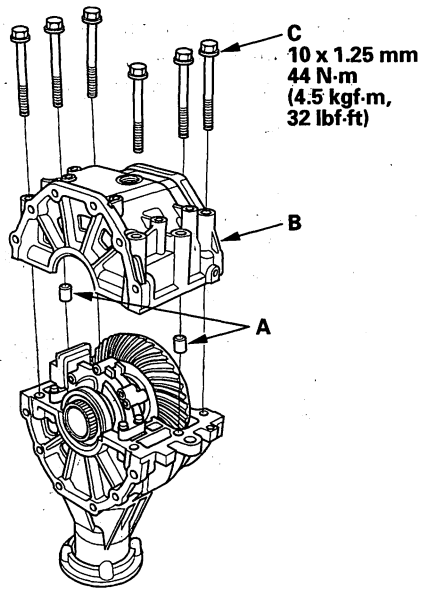


27. Tighten the six mounting bolts in a crisscross pattern in several steps.

28. Install the 83 mm shim (A), the bearing set plate (B) and the six mounting bolts (C).

NOTE: Install the bearing set plate, check to identification marks (D) as shown.

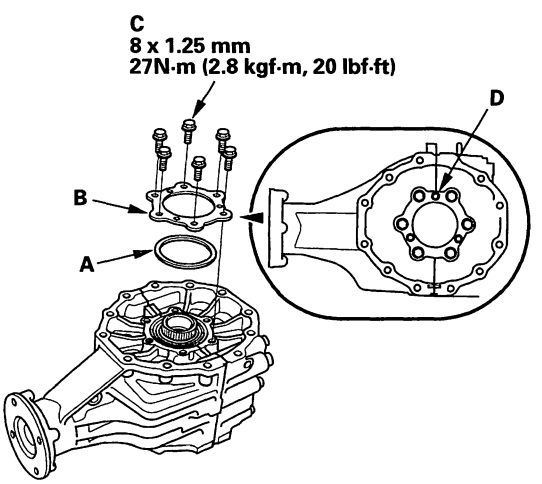


29. Tighten the six mounting bolts in a crisscross pattern in several steps.

30. Remove the dirt and oil from the sealing surfaces. Apply liquid gasket (P/N 08718-0001) to the sealing surface. Make sure you seal the entire circumference of the bolt holes to prevent oil leakage.

NOTE:
- You must assemble the housings within do in 5 minutes after applying the liquid gasket. If not, the sealing surface must be cleaned, and the liquid gasket reapplied.
- Allow it to cure at least 30 minutes after assembly before filling the differential with fluid.

**Left side case/Right side case**

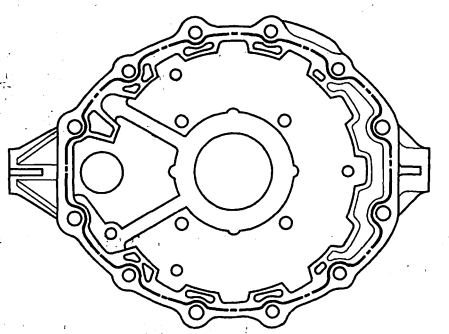

—·—·— Apply liquid gasket along the broken line and around all bolt holes.

(cont'd)

Protected by AR



## Center Case Oil Seal Replacement (cont'd)

31. Install the 8 x 12 mm dowel pins (A), the rear differential right side case (B), the rear differential left side case (C) and the mounting bolts (D).

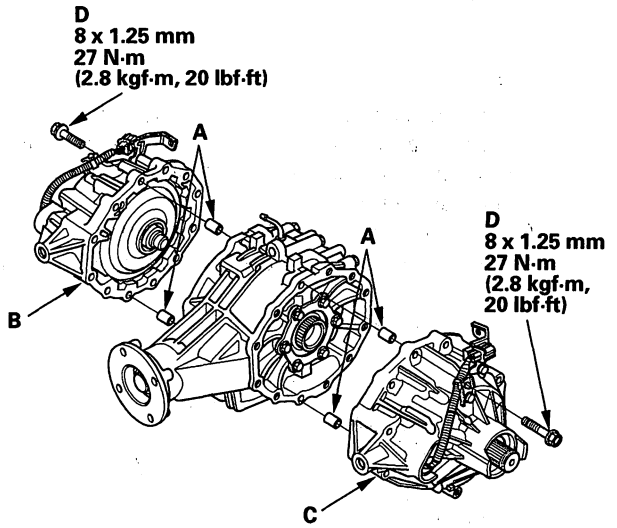


32. Tighten the mounting bolts in a crisscross pattern in several steps.

33. Install the differential fluid temperature sensor cover (A), differential fluid temperature (B), new O-ring (C), and rear differential harness bracket (D).

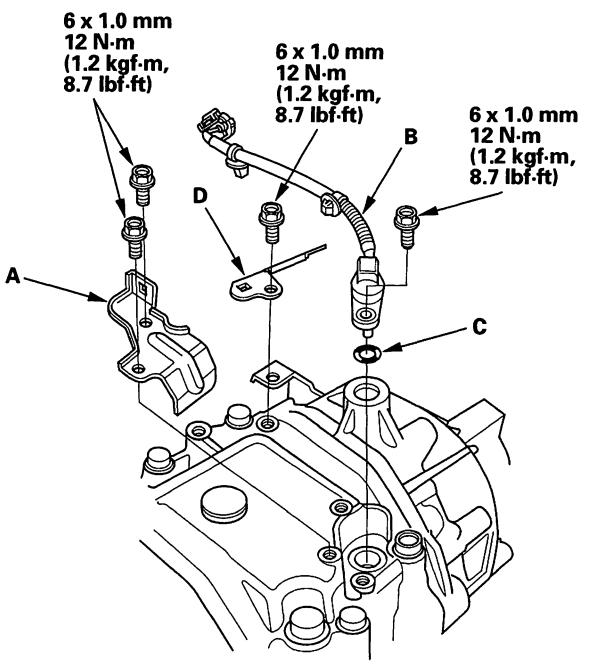


34. Install the rear differential front mounting brackets (A) on the rear differential (B).

NOTE: Install a lower surface of the guide (C) horizontally as shown, then tighten the rear differential front mounting bracket bolts (D).

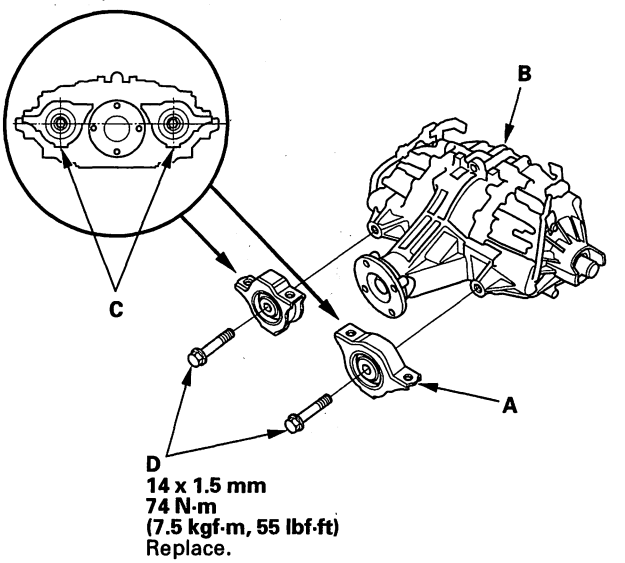


35. Install the rear differential (see page 15-74).

36. Refill the differential fluid (see page 15-69).



BACK

Protected by AR

## Side Case Oil Seal Replacement

**Special Tools Required**
- Oil seal driver A 070AD-STK0110
- Oil seal driver B 070AD-STK0120
- Fork seal driver weight 07747-0010100

1. Remove the rear differential (see page 15-73).

2. Remove the 40 x 55 x 7.5 mm dust seal (A) with a commercially available tool.

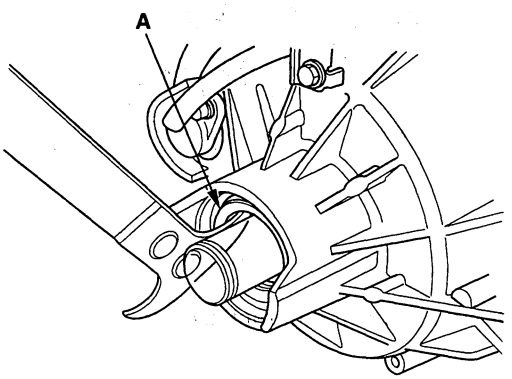


3. Remove the thrust washer.

4. Cut a slit at each position (4 place, 90 degrees apart) (A) on the 34.7 x 54 x 9 mm oil seal (B), then install 6 mm screw (C) (P/N 93901-16580) into the oil seal at each location. Remove the seal with pliers (D) and screw driver (E) as shown.

   NOTE: Do not thread the 6 mm screws into the oil seal more than 5 mm (0.197 in.)

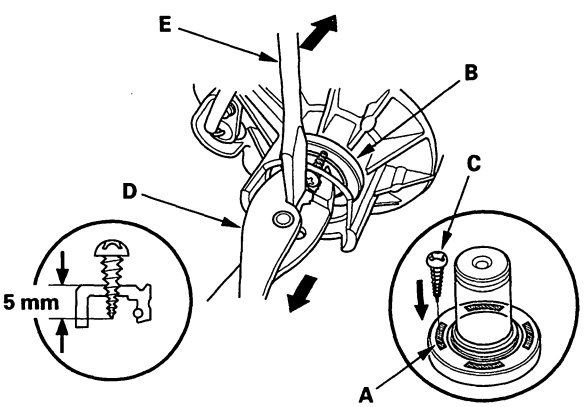


5. Install the new 34.7 x 54 x 9 mm oil seal (A) into the rear differential side case (B) with the fork seal driver weight (C) and oil seal driver A (D).

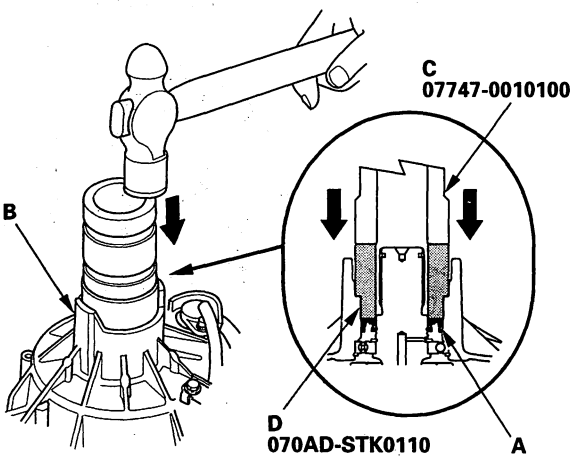


6. Install the thrust washer (A), then install the new 40 x 55 x 7.5 mm dust seal (B) with the fork seal driver weight (C) and oil seal driver B (D).

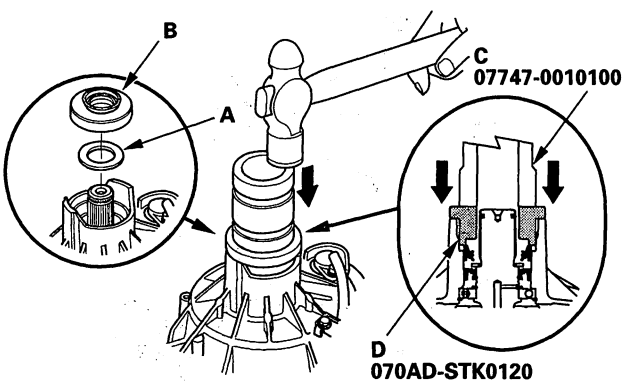


7. Install the rear differential (see page 15-74).

Protected by AR



## Center Case Replacement

1. Remove the rear differential (see page 15-73).
2. Remove the rear differential front mounting brackets (A) from the rear differential (B).

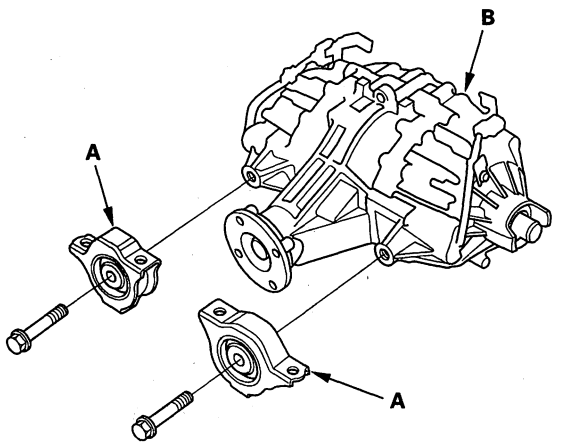


3. Remove the differential fluid temperature sensor cover (A), differential fluid temperature (B), O-ring (C), and rear differential harness bracket (D).

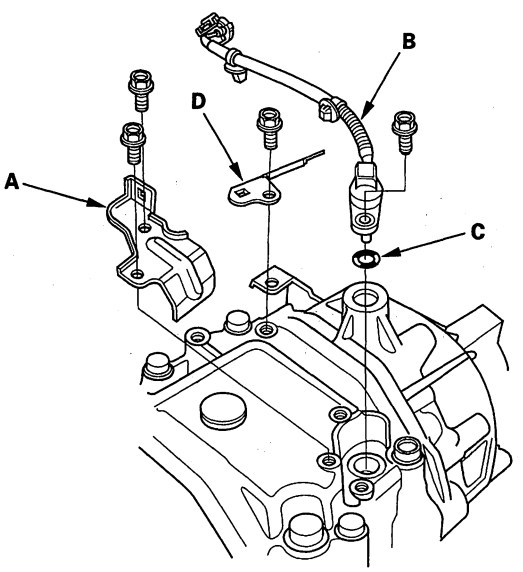


4. Remove the rear differential left side case (A), the rear differential right side case (B), the 10 x 12 dowel pins (C) from the rear differential center case (D).

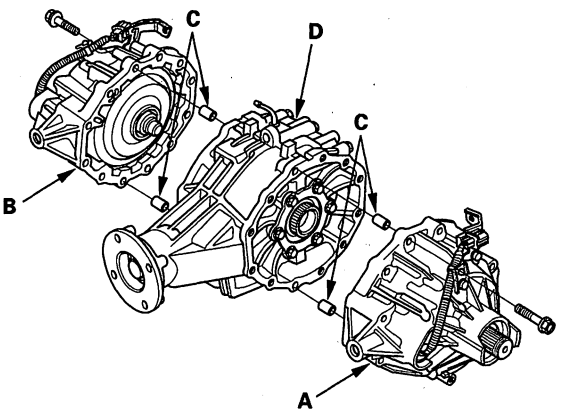


5. Replace the rear differential center case.



BACK

Protected by AR

6. Remove the dirt and oil from the sealing surfaces. Apply liquid gasket (P/N 08718-0001) to the sealing surface. Make sure you seal the entire circumference of the bolt holes to prevent oil leakage.

   NOTE:
   - You must assemble the housings with you do in 5 minutes after applying the liquid gasket. If not, the sealing surface must be cleaned, and the liquid gasket reapplied.
   - Allow it to cure at least 30 minutes after assembly before filling the differential with fluid.

**Left side case /Right side case**

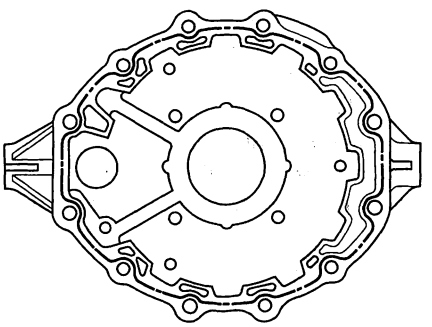

—·—·— Apply liquid gasket along the broken line and around all bolt holes.

7. Install the 8 x 12 mm dowel pins (A), the rear differential right side case (B), the rear differential left side case (C) and the mounting bolts (D) on to the rear differential center case (E).

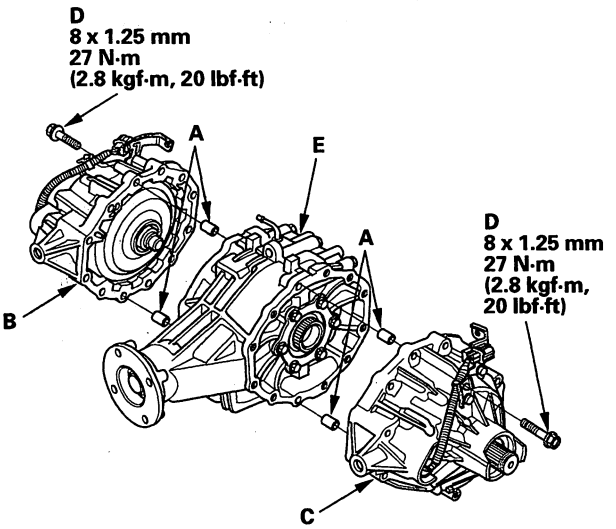


8. Tighten the mounting bolts in a crisscross pattern in several steps.

9. Install the differential fluid temperature sensor cover (A), differential fluid temperature (B), new O-ring (C), and rear differential harness bracket (D).

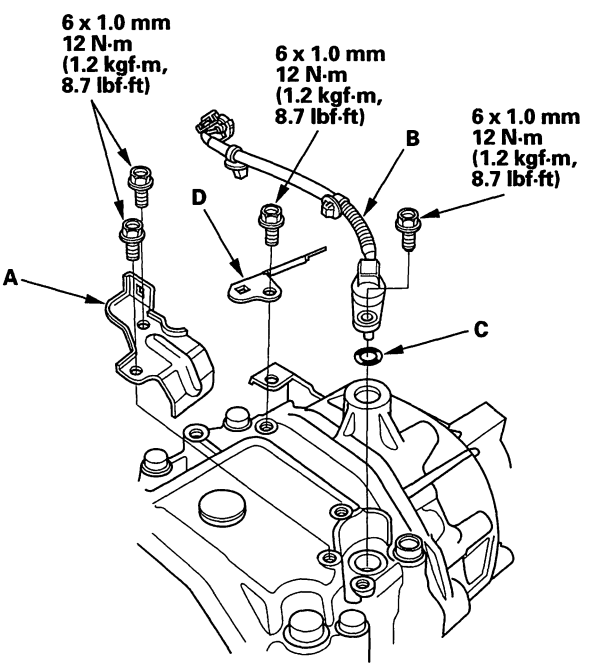


(cont'd)

Protected by AR



## Center Case Replacement (cont'd)

10. Install the rear differential front mounting brackets (A) on the rear differential (B).

    NOTE: Install a lower surface of the guide (C) horizontally as shown, then tighten the rear differential front mounting bracket bolts (D).

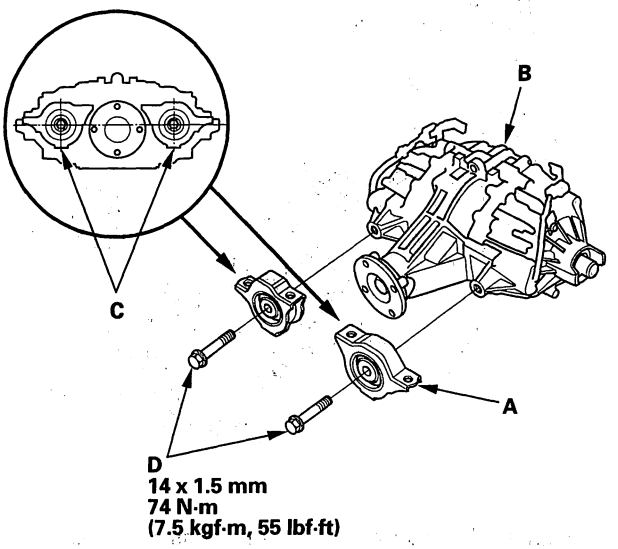


11. Install the rear differential (see page 15-74).

12. Refill the differential fluid (see page 15-69).

## Side Case Replacement

1. Remove the rear differential (see page 15-69).

2. Remove the rear differential front mounting brackets (A) from the rear differential (B).

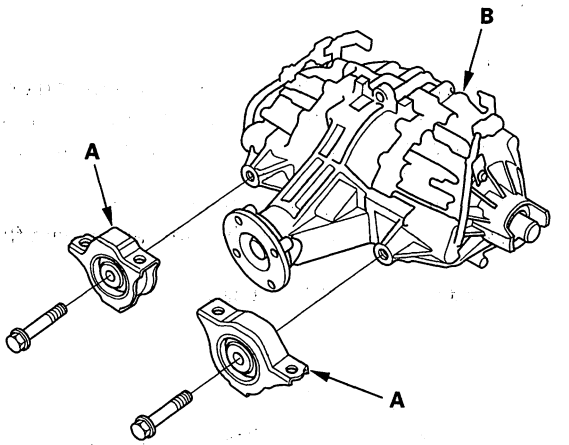


3. Remove the differential fluid temperature sensor cover (A), differential fluid temperature (B), O-ring (C), and rear differential harness bracket (D).

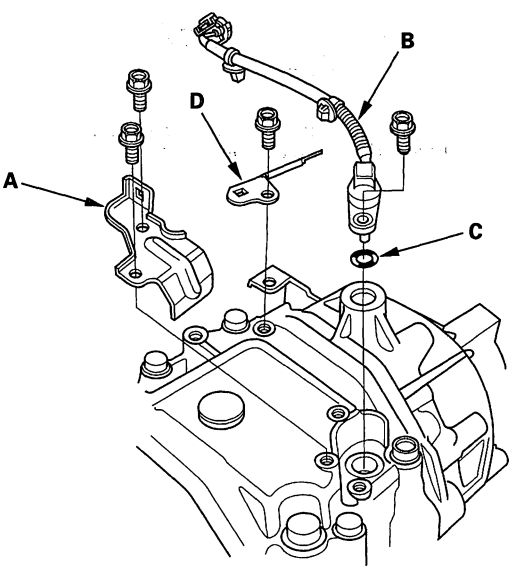




BACK

Protected by AR

4. Remove the rear differential left side case (A) or the rear differential right side case (B), the 10 x 12 dowel pins (C) from the rear differential center case (D).

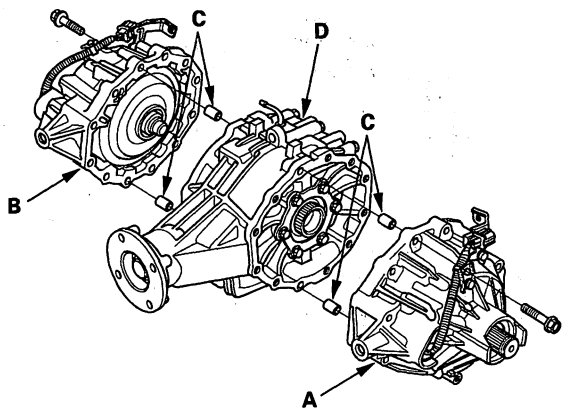


5. Replace the rear differential left side case or the differential right side case.

6. Remove the ring gear (A), needle bearing (B), and the 60.2 mm shim (C) from the differential side case (D).

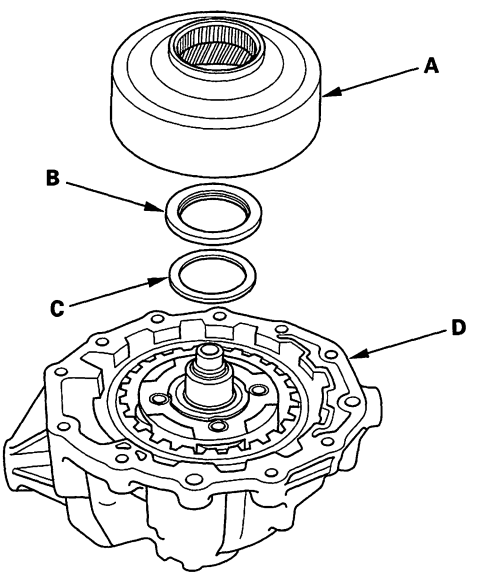


7. Measure distance ① between the end of the rear differential side case (A) and 60.2 mm shim contact area of planetary gear (B) with a straight edge (C) and depth gauge (D).
Measure at three locations, and average the reading.

NOTE:
- Carry out the measurement at normal room temperature.
- Clean all the parts thoroughly before measure.

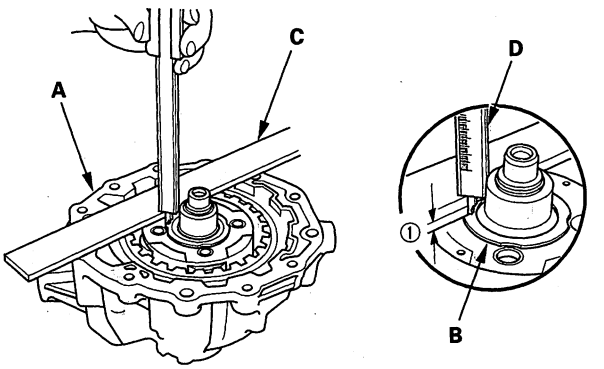


8. Measure distance ② between the end of the rear differential center case (A) and ring gear contact area of tapper roller bearing (B) with a straight edge (C) and depth gauge (D).
Measure at three locations, and average the reading.

NOTE:
- Carry out the measurement at normal room temperature.
- Clean all the parts thoroughly before measure.

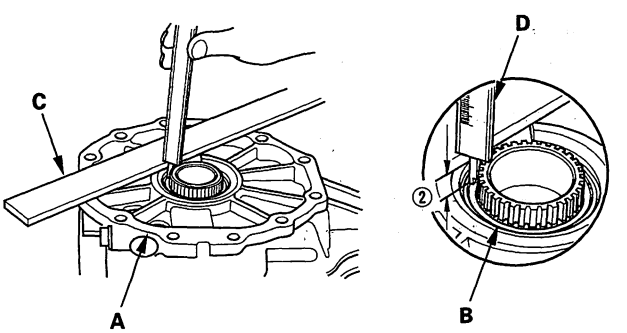


(cont'd)

Protected by AR



## Side Case Replacement (cont'd)

9. Measure the distance ③ between the needle bearing (A) and tapper roller bearing contact area of ring gear (B) with a depth gauge (C). Measure at three locations, and average the reading.

   NOTE:
   - Carry out the measurement at normal room temperature.
   - Clean all the parts thoroughly before measure.

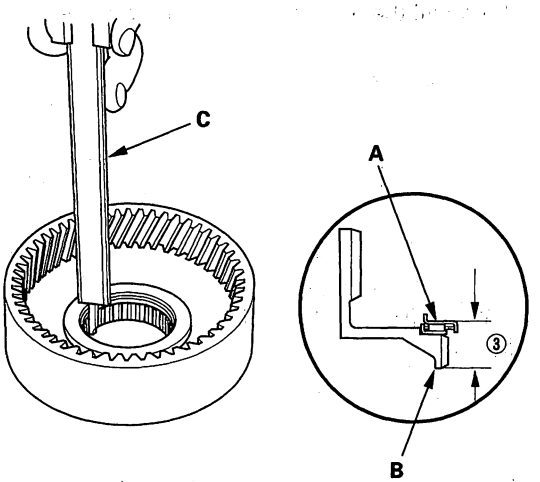


**Shim Selection Formula**

10. Select the proper 60.2 mm shim from the table. Follow the example below, and use the measurements you made in step 7 to 9.

    **(Basic Formula)**
    **① + ② − ( ③ + 0.19) = shim thikness**
    **0.19 mm (0.007 in.): middle of the clearance standard.**

    **Clearance Standard:**
    **0.14—0.24 mm (0.006—0.009 in.)**

    **(For example)**
    **① = 6.12 mm (0.241 in.)**
    **② = 15.3 mm (0.602 in.)**
    **③ = 19.56 mm (0.770 in.)**
    **6.12 + 15.3 − (19.56 + 0.19) = 1.67 mm**

Select the 1.60 mm shim from the table.

**60.2 mm shim**

| | Part Number | Thickness |
|---|---|---|
| A | 48701-RWG-000 | 1.10 mm (0.043 in.) |
| B | 48702-RWG-000 | 1.20 mm (0.047 in.) |
| C | 48703-RWG-000 | 1.30 mm (0.051 in.) |
| D | 48704-RWG-000 | 1.40 mm (0.055 in.) |
| E | 48705-RWG-000 | 1.50 mm (0.059 in.) |
| F | 48706-RWG-000 | 1.60 mm (0.063 in.) |
| G | 48707-RWG-000 | 1.70 mm (0.067 in.) |
| H | 48708-RWG-000 | 1.80 mm (0.071 in.) |
| I | 48709-RWG-000 | 1.90 mm (0.075 in.) |
| J | 48710-RWG-000 | 2.00 mm (0.079 in.) |
| K | 48711-RWG-000 | 2.10 mm (0.083 in.) |
| L | 48712-RWG-000 | 2.20 mm (0.087 in.) |



BACK

Protected by AR

11. Place one strip of plastigage (A) on 60.2 mm shim contact area of planetary gear (B).
Install the 60.2 mm shim (C), needle bearing (D) and the ring rear (E).
Measure at three locations, and average the reading.

NOTE:
- Carry out the measuement at normal room temperature.
- Clean all the parts thoroughly before measure.

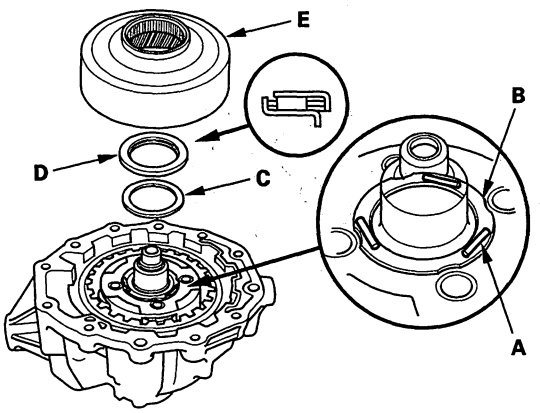


12. Install the 8 x 12 mm dowel pins (A), the rear differential right side case (B) or the rear differential left side case (C) and the mounting bolts (D).

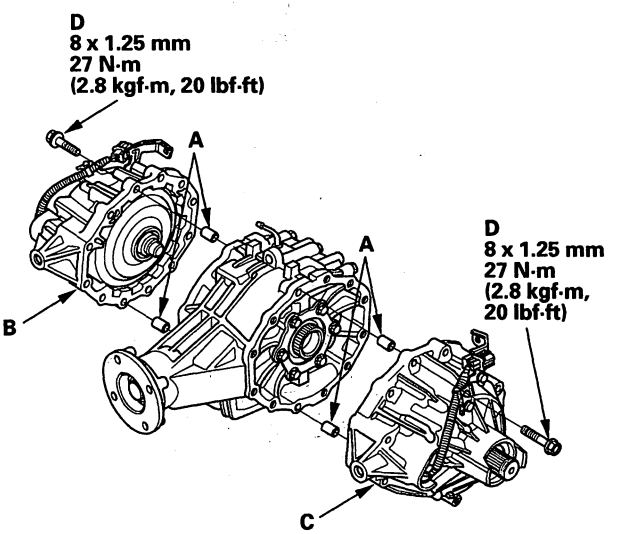


13. Tighten the mounting bolts in a crisscross patten in several steps.

14. Remove the rear differential left side case (A) or the rear differential right side case (B), the 10 x 12 mm dowel pins (C) from the rear differential center case (D).

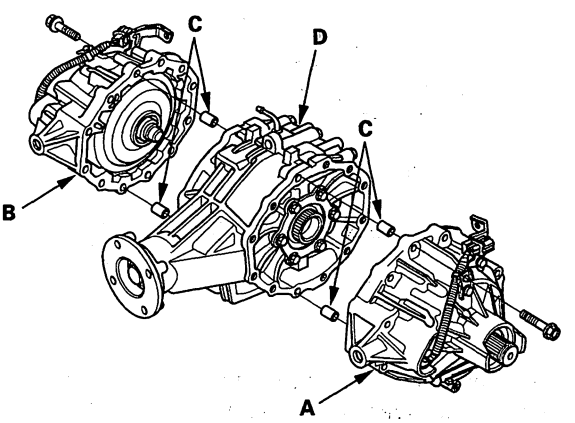


(cont'd)

BACK

Protected by AR



## Side Case Replacement (cont'd)

15. Remove the ring gear (A), needle bearing (B), and the 60.2 mm shim (C) from the differential side case (D).

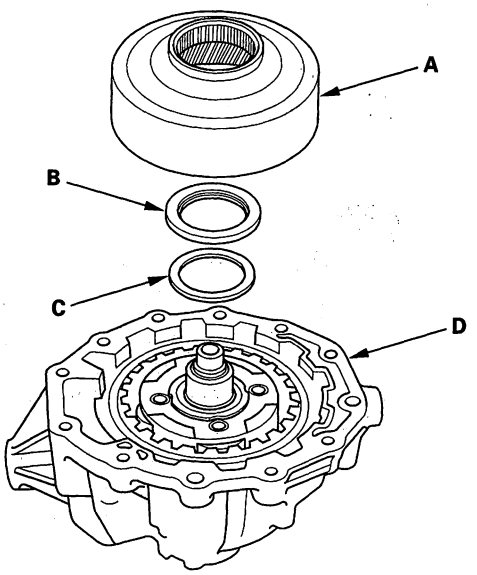


16. Measure the widest part of the plastigage.

**Clearance Standard:**
**0.14—0.24 mm (0.006—0.009 in.)**

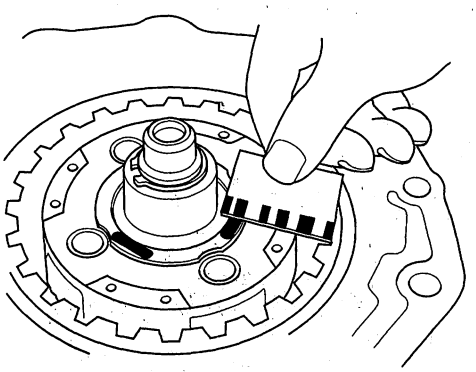

17. If the clearance is more than the standard, go to step 7. If the clearance measured in step 16 is within the standard, go to step 18.

18. Install the 60.2 mm shim (A), needle bearing (B) and the ring gear (C) onto the rear differential side case (D).

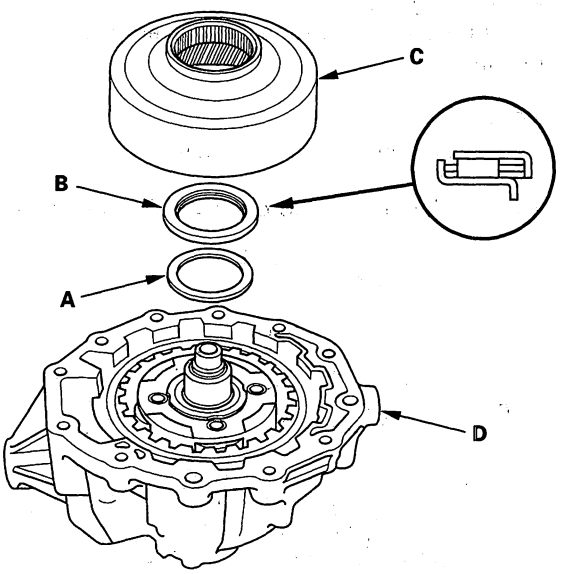




BACK

Protected by AR

19. Remove the dirt and oil from the sealing surfaces. Apply liquid gasket (P/N 08718-0001) to the sealing surface. Make sure you seal the entire circumference of the bolt holes to prevent oil leakage.

NOTE:
- You must assemble the housings with you do in 5 minutes after applying the liquid gasket. If not, the sealing surface must be cleaned, and the liquid gasket reapplied.
- Allow it to cure at least 30 minutes after assembly before filling the differential with fluid.

**Left side case/Right side case**

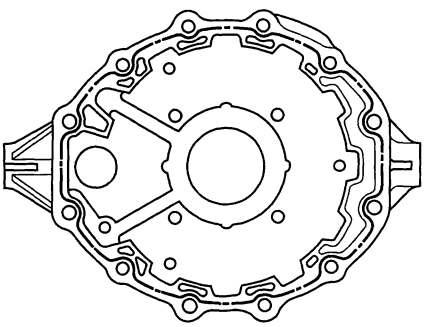

——·——·—— Apply liquid gasket along the broken line and around all bolt holes.

20. Install the 8 x 12 mm dowel pins (A), the rear differential right side case (B) or the rear differential left side case (C) and the mounting bolts (D) onto the rear differential center case (E).

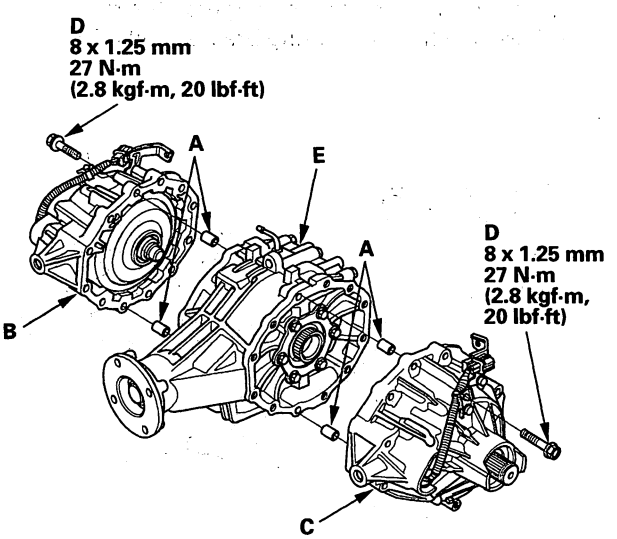


21. Tighten the mounting bolts in a crisscross pattern in several steps.

22. Install the differential fluid temperature sensor cover (A), differential fluid temperature (B), new O-ring (C), and rear diffrential harness bracket (D).

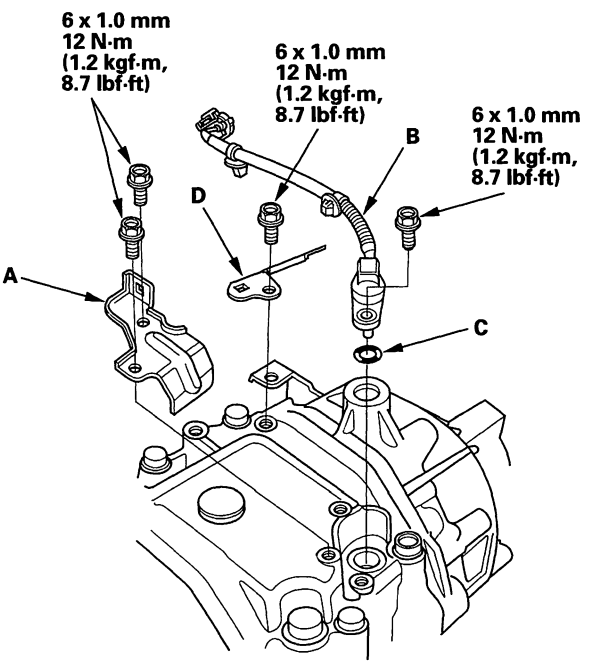


(cont'd)

Protected by AR



## Side Case Replacement (cont'd)

23. Install the rear differential front mounting brackets (A) on the rear differential (B).

    NOTE: Install a lower surface of the guide (C) horizontally as shown, then tighten the rear differential front mounting bracket bolts (D).

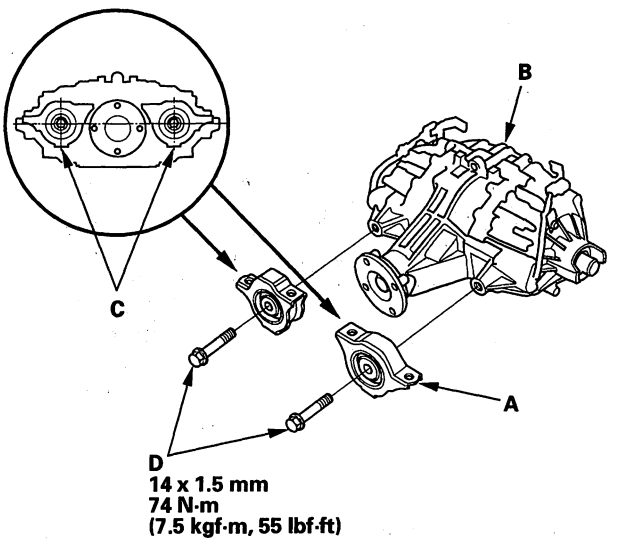


24. Install the rear differential (see page 15-74).

25. Refill the differential fluid (see page 15-69).



BACK

Protected by AR

# Driveline/Axle


Special Tools ..... 16-2
Component Location Index ..... 16-3
Driveshaft Inspection ..... 16-4
Front Driveshaft Removal ..... 16-4
Boot Band Removal ..... 16-6
Front Driveshaft Disassembly ..... 16-7
Dynamic Damper Replacement ..... 16-10
Boot Band Installation ..... 16-11
Front Driveshaft Reassembly ..... 16-14
Front Driveshaft Installation ..... 16-19
Intermediate Shaft Removal ..... 16-21
Intermediate Shaft Disassembly ..... 16-22
Intermediate Shaft Reassembly ..... 16-23
Intermediate Shaft Installation ..... 16-25
Rear Driveshaft Removal ..... 16-26
Rear Driveshaft Disassembly ..... 16-29
Rear Driveshaft Reassembly ..... 16-31
Rear Driveshaft Installation ..... 16-35
Propeller Shaft Inspection ..... 16-37
Propeller Shaft Removal ..... 16-38
Propeller Shaft Installation ..... 16-39


BACK

Protected by AR



## Special Tools

| Ref. No. | Tool Number | Description | Qty |
|---|---|---|---|
| ① | 07AAD-S3VA000 | Driveshaft Remover | 1 |
| ② | 07JAD-PL90100 | Oil Seal Driver | 1 |
| ③ | 07NAD-P200100 | Attachment, 52 x 55 mm | 1 |
| ④ | 07NAF-SR30101 | Half Shaft Base | 1 |
| ⑤ | 07XAC-001010A | Threaded Adapter, 22 x 1.5 mm | 1 |
| ⑥ | 07XAC-001020A | Threaded Adapter, 24 x 1.5 mm | 1 |
| ⑦ | 07947-4630100 | Driver | 1 |
| ⑧ | 07749-0010000 | Driver | 1 |
| ⑨ | 07946-MB00000 | Inner Handle, 30 mm | 1 |
| ⑩ | 07947-SB00100 | Oil Seal Driver | 1 |

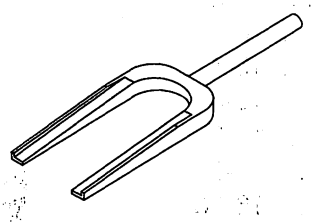
①

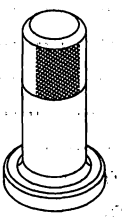
②

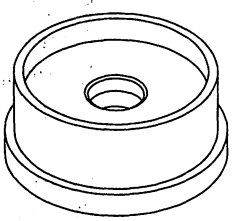
③

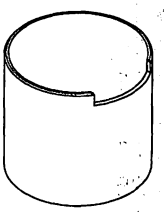
④

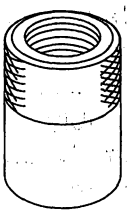
⑤, ⑥

⑦

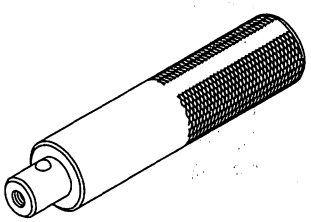
⑧

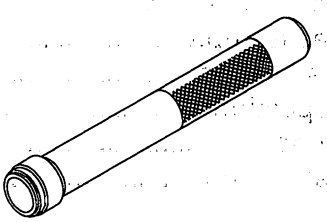
⑨

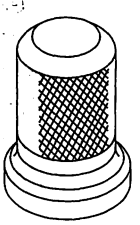
⑩



BACK

Protected by AR

## Component Location Index

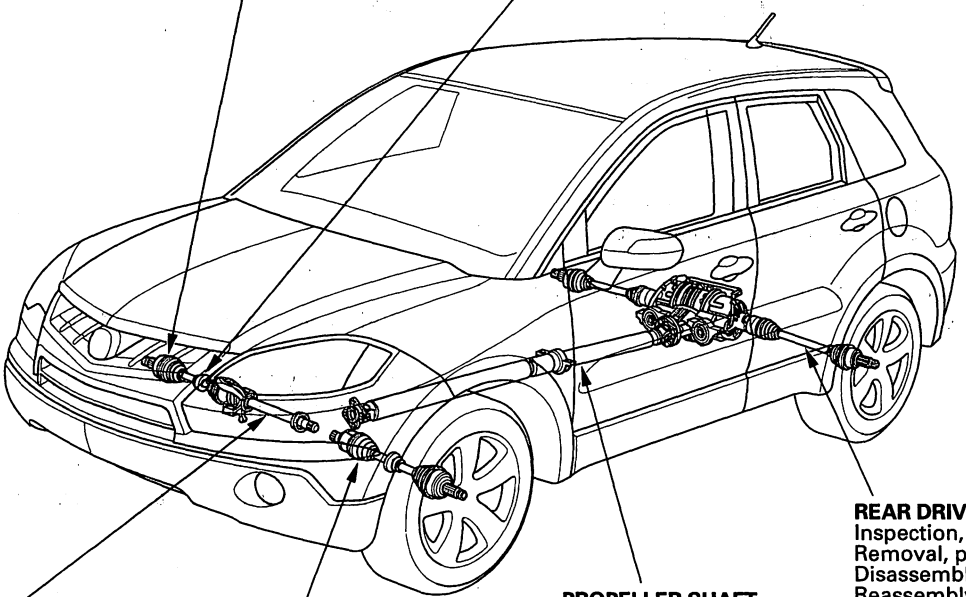


BACK

Protected by AR



## Driveshaft Inspection

1. Check the inboard boot (A) and the outboard boot (B) on the driveshaft (C) for cracks, damage, leaking grease, and loose boot bands (D). If any damage is found, replace the boot and boot bands.

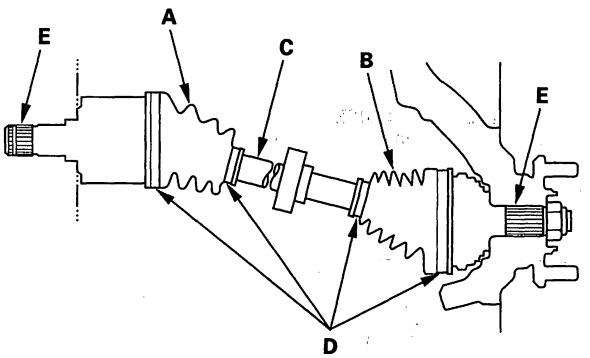


2. Turn the driveshaft by hand, and make sure the splines (E) and joint are not excessively loose.

3. Make sure the driveshaft is not twisted or cracked; if it is, replace it.

## Front Driveshaft Removal

1. Raise the vehicle on a lift (see page 1-7).

2. Remove the front wheels.

3. Lift up the locking tab (A) on the spindle nut (B), then remove the nut.

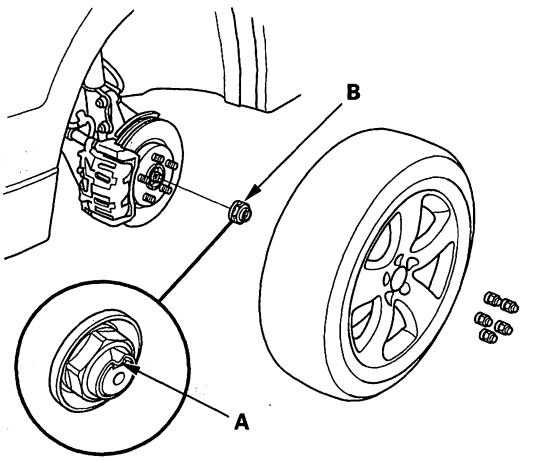


4. Before you remove the left driveshaft, drain the transmission fluid (see page 14-239). It is not necessary to drain the transmission fluid if you remove the right driveshaft.

5. Loosen the driveshaft outboard joint from the front wheel hub using a plastic hammer.

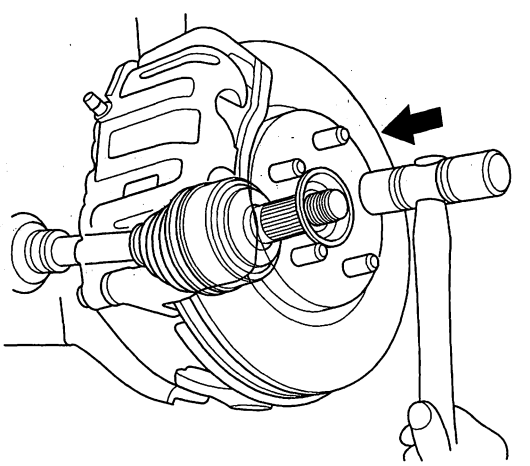



BACK

Protected by AR

6. Remove the nuts and bolt, then separate the lower arm with a prybar.

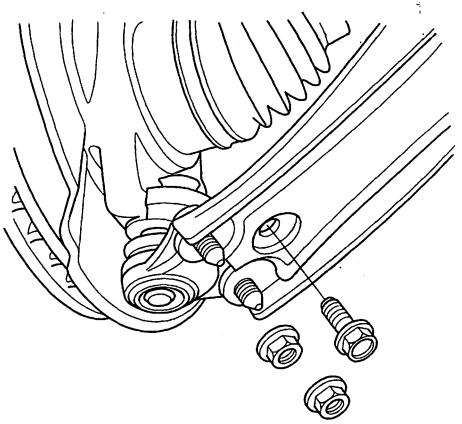

7. Pull the knuckle outward, and remove the driveshaft outboard joint from the front wheel hub.

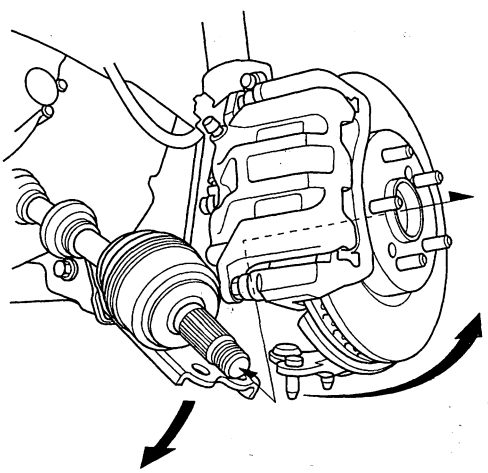

8. Left driveshaft: Install the prybar through the reference hole (A) of the front subframe, and pry the inboard joint (B) from the differential case with a prybar.

   Right driveshaft: Drive the inboard joint off the intermediate shaft with a drift and hammer. Remove the driveshaft as an assembly. Do not pull on the driveshaft (C), because the inboard joint may come apart. Pull the driveshaft straight out to avoid damaging the oil seal.

**Left driveshaft**

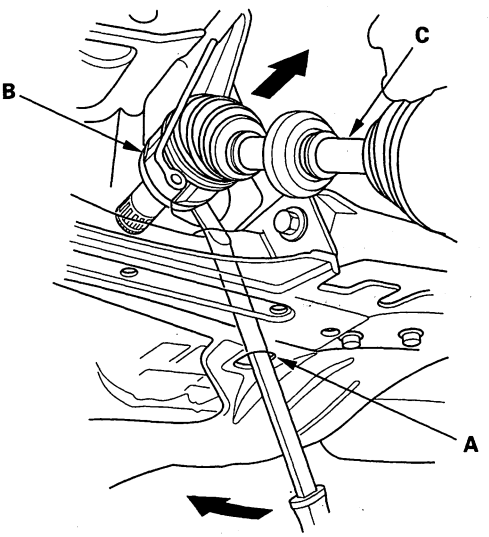


**Right driveshaft**

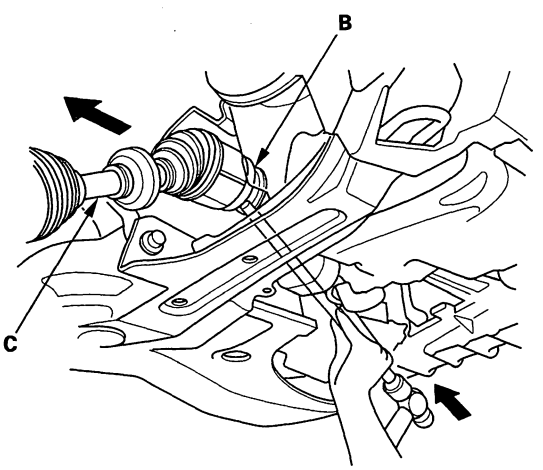

Protected by AR



## Boot Band Removal

NOTE: When removing the boot bands, be careful not to damage the boot and dynamic damper.

### Welded Type

1. Cut the boot band (A), then remove the boot band.

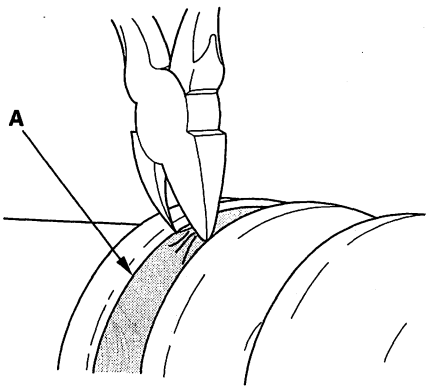


### Double loop type

1. Lift up the band end (A), then push it into the clip (B), then remove the boot band.

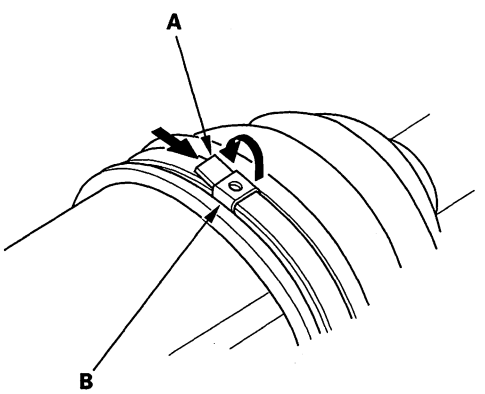


### Low Profile Type

1. Pinch the boot band using commercially available boot band pliers (A), then remove the boot band.

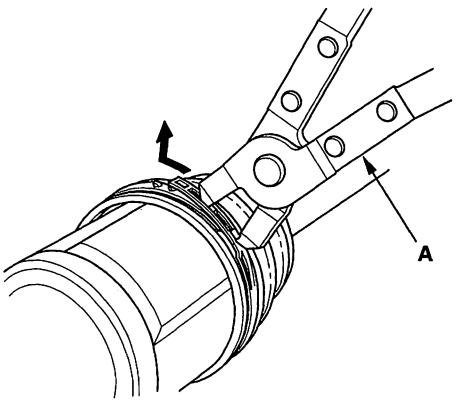


### Ear Clamp Type

1. Lift up the three tabs (A) with a screwdriver, then remove the boot band.

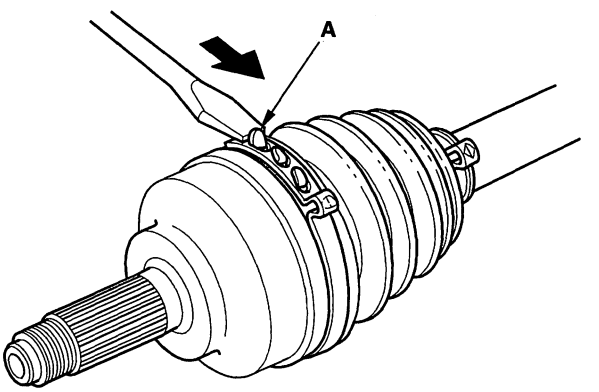




BACK

Protected by AR

# Front Driveshaft Disassembly

**Special Tools Required**
- Threaded adapter, 24 x 1.5 mm 07XAC-001020A
- Slide hammer, 5/8" x 18 UNF, commercially available

## Inboard Joint Side

1. Remove the set ring (A) from the inboard joint.

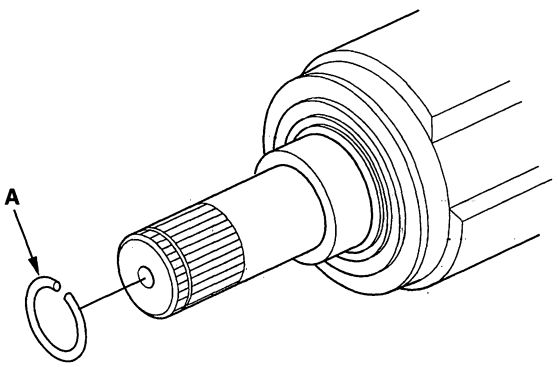


2. Remove the boot bands. Be careful not to damage the boot and dynamic damper (see page 16-6).

3. Make a mark (A) on each roller (B) and inboard joint (C) to identify the locations of rollers and grooves in the inboard joint. Then remove the inboard joint on the shop towel (D). Be careful not to drop the rollers when separating them from the inboard joint.

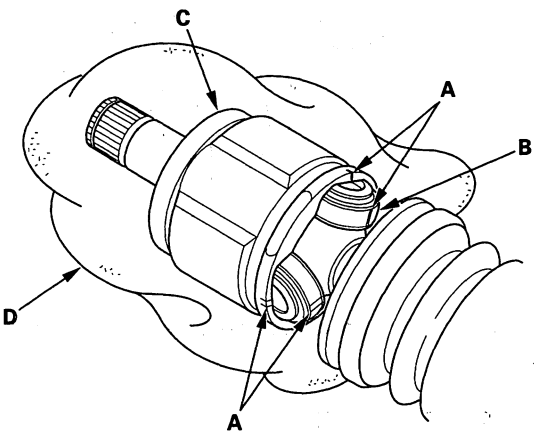


4. Make marks (A) on the rollers (B) and spider (C) to identify the locations of the rollers on the spider, then remove the rollers.

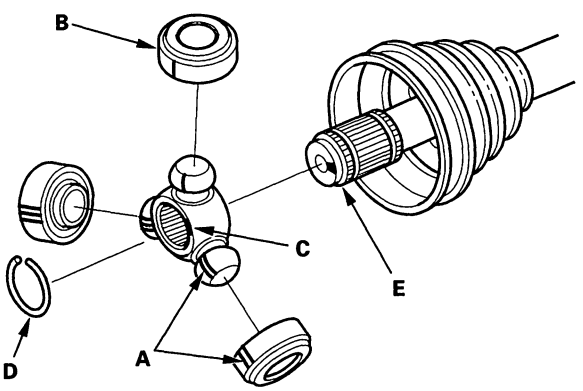


5. Remove the circlip (D).

6. Mark the spider and driveshaft (E) to identify the position of the spider on the shaft.

7. Remove the spider.

NOTE:
- Do not engrave or scribe mark on the rolling surface.
- If necessary, use a commercially available puller.

(cont'd)

Protected by AR



## Front Driveshaft Disassembly (cont'd)

8. Wrap the splines on the driveshaft with vinyl tape (A) to prevent damaging to the boot.

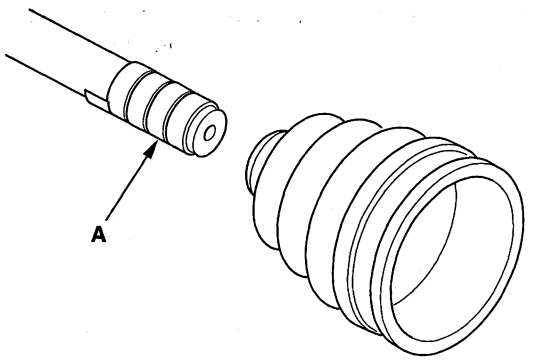


9. Remove the inboard boot. Be careful not to damage the boot.

10. Remove the vinyl tape.

### Outboard Joint Side

1. Remove the boot bands. Be careful not to damage the boot and dynamic damper (see page 16-6).

2. Slide the outboard boot (A) partially to the inboard joint side. Be careful not to damage the boot.

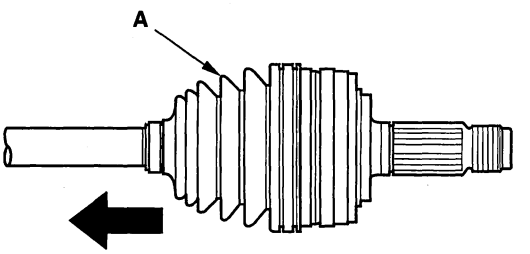




BACK

Protected by AR

3. Wipe off the grease to expose the driveshaft and the outboard joint inner race.

4. Make a mark (A) on the driveshaft (B) at the same position of the outboard joint end (C).

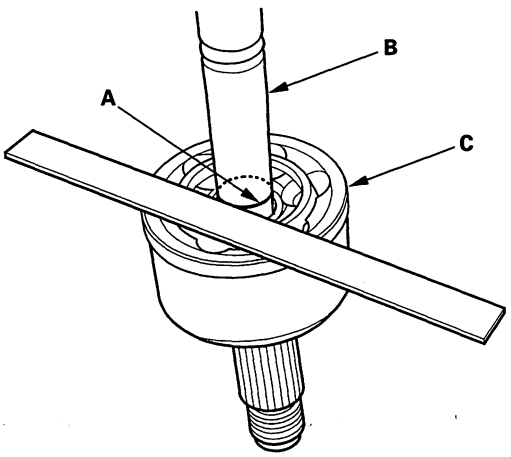


5. Carefully clamp the driveshaft in a vise.

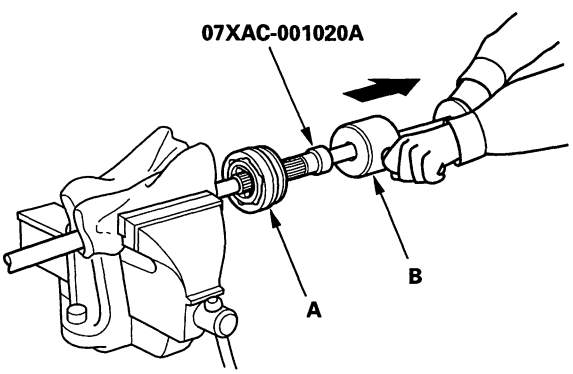


6. Remove the outboard joint (A) using the threaded adapter and a commercially available 5/8" x 18 UNF slide hammer (B).

7. Remove the driveshaft from the vise.

8. Remove the stop ring (A) from the driveshaft.

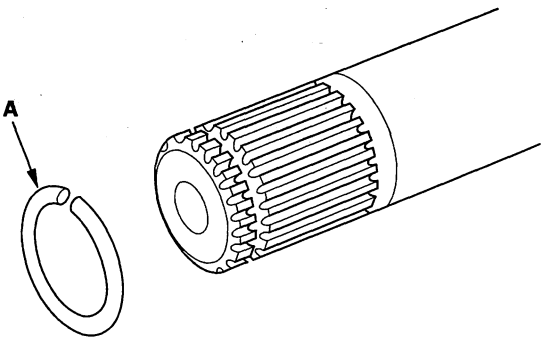


9. Wrap the splines on the driveshaft with vinyl tape (A) to prevent damaging to the boot.

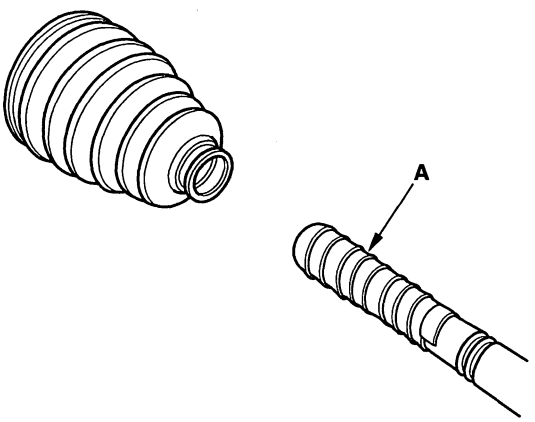


10. Remove the outboard boot. Be careful not to damage the boot.

11. Remove the vinyl tape.

Protected by AR



## Dynamic Damper Replacement

1. Remove the inboard joint (see page 16-7).
2. Remove the dynamic damper bands. Be careful not to damage the dynamic damper (see page 16-6).
3. Wrap the splines on the driveshaft with vinyl tape (A) to prevent damaging to the dynamic damper.

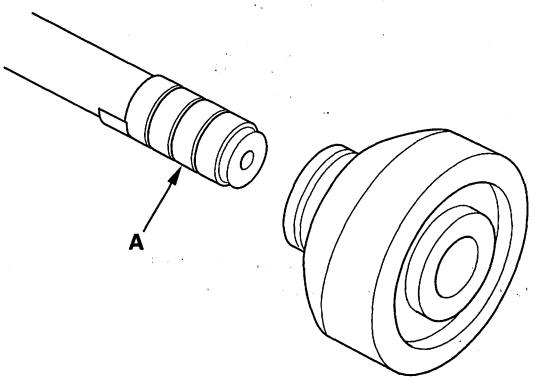


4. Remove the dynamic damper. Be careful not to damage the dynamic damper.
5. Adjust the position of the new dynamic damper to the figure follow.

   **255.5—260.5 mm (10.1—10.3 in.)**

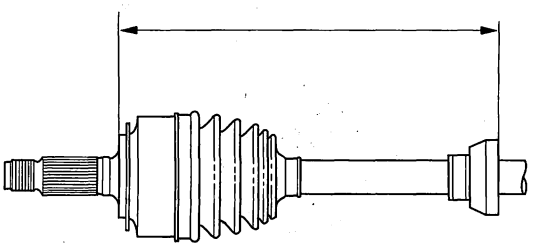

6. Install the dynamic damper band (see page 16-11).
7. Install the inboard joint (see page 16-15).



BACK

Protected by AR

## Boot Band Installation

**Special Tools Required**
- Boot band tool, KD-3191 or equivalent, commercially available
- Boot band pliers, Kent-Moore J-35910 or equivalent, commercially available

### Double Loop Type

1. Fit the boot ends onto the driveshaft and the inboard joint, then install the new double loop band (A) onto the boot.

   NOTE: The edge of the band is wound around the driveshaft in the forward direction of rotation.

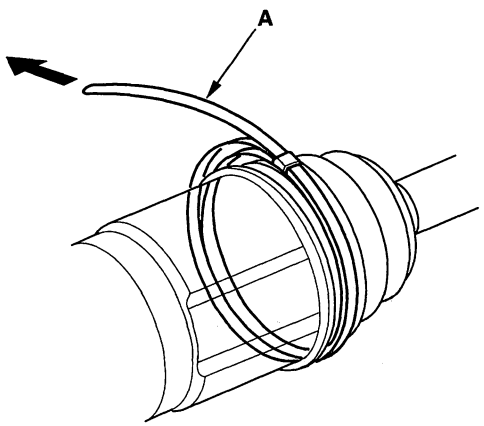


2. Pull up the slack in the band by hand.

3. Mark a position (A) on the band 10—14 mm (0.4—0.6 in.) from the clip (B).

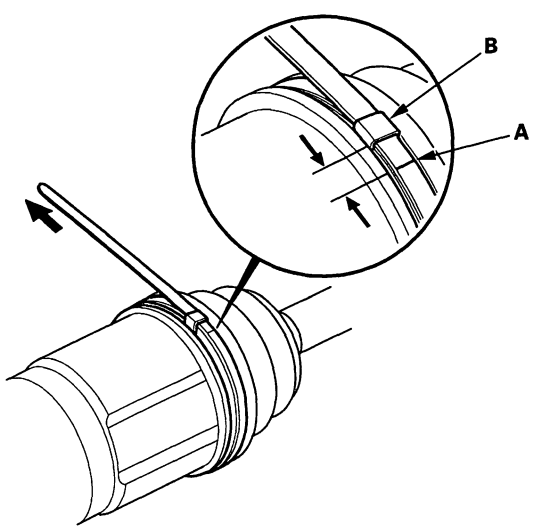


4. Thread the free end of the band through the nose section of the commercially available boot band tool KD-3191 or equivalent (A), and into the slot on the winding mandrel (B).

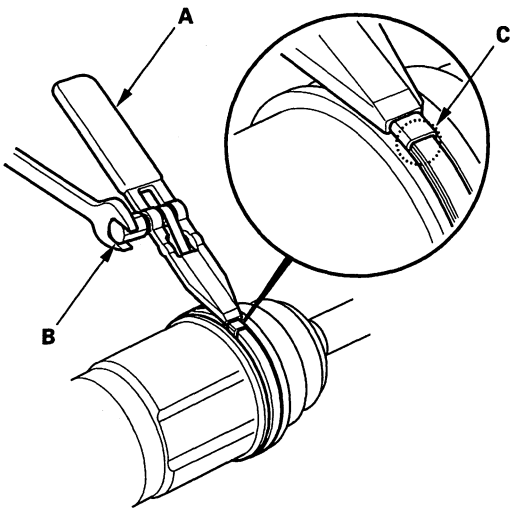


5. Place a wrench on the winding mandrel of the boot band tool, and tighten the band until the marked spot (C) on the band meets the edge of the clip.

6. Lift up the boot band tool to bend the free end of the band 90 degrees to the clip. Center-punch the clip, then fold over the remaining tail onto the clip.

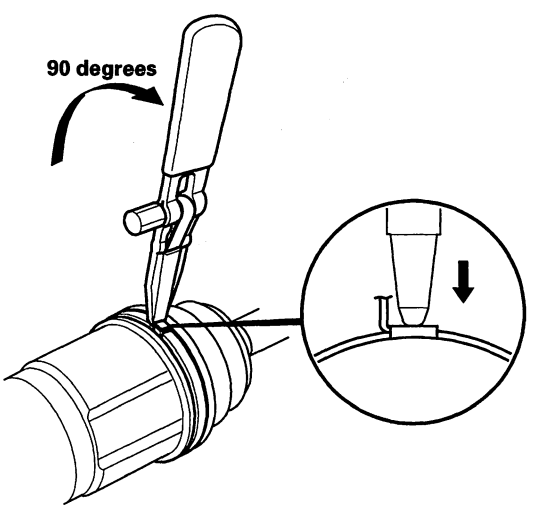


(cont'd)

Protected by AR



## Boot Band Installation (cont'd)

7. Unwind the boot band tool, and cut off the excess free end of the band to leave a 5—10 mm (0.2—0.4 in.) tail protruding from the clip.

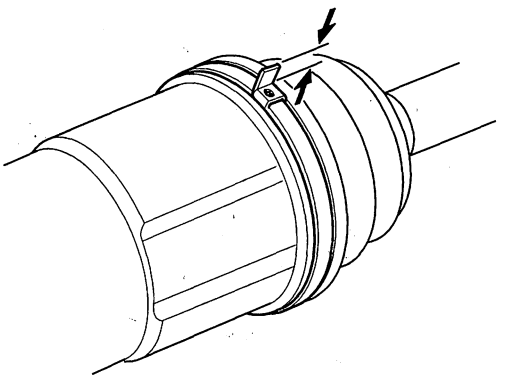

8. Bend the band end (A) by tapping it down with a hammer.

NOTE:
- Make sure the band and clip do not interfere with anything on the vehicle and the band does not move.
- Remove any grease remaining on the surrounding surfaces.

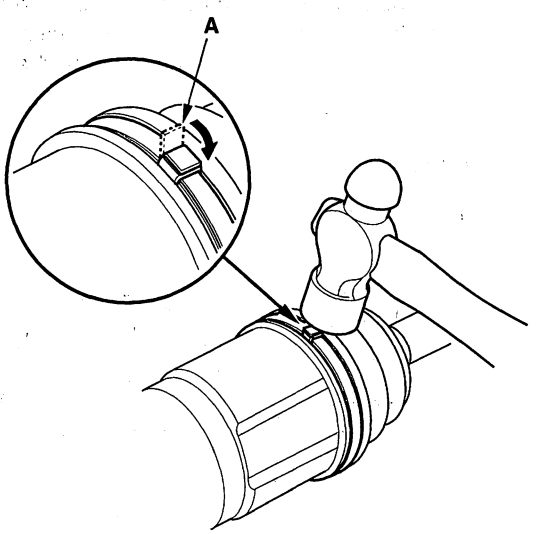


### Ear Clamp Type

1. Close the ear portion (A) of the band with commercially available boot band pliers Kent-Moore J-35910 or equivalent (B).

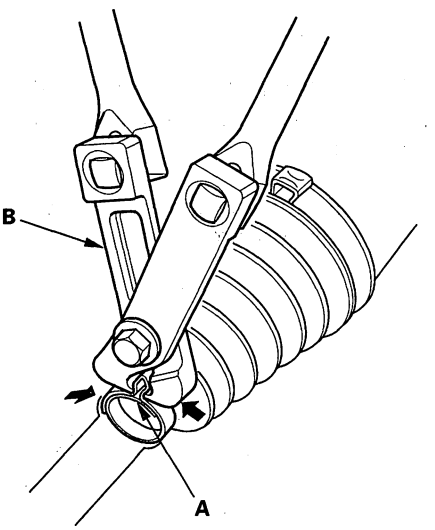


2. Check the clearance between the closed ear portion of the band. If the clearance is not within the standard, close the ear portion of the band farther.

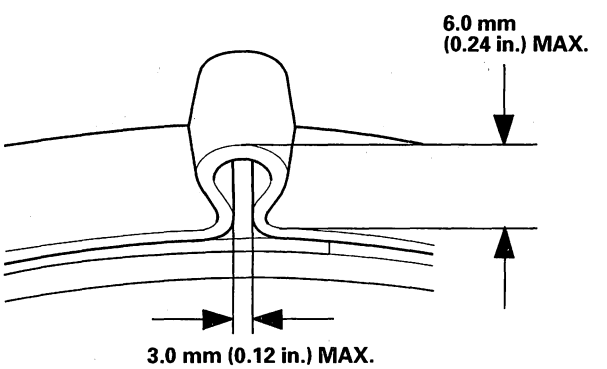




BACK

Protected by AR

## Low Profile Type

1. Install the new low profile band (A) onto the boot (B), then hook the tab (C) of the band.

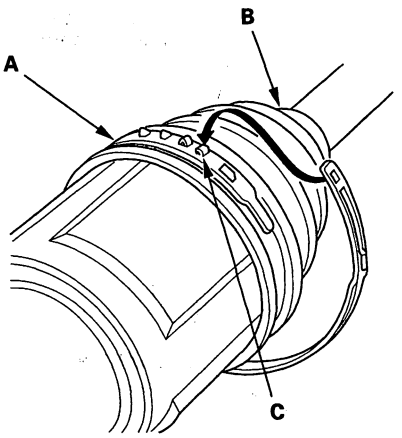


2. Close the hook portion of the band with commercially available boot band pliers (A), then hook the tabs (B) of the band.

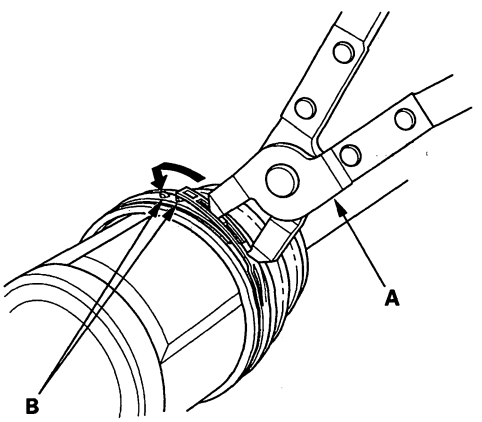

Protected by AR



## Front Driveshaft Reassembly

### Exploded View

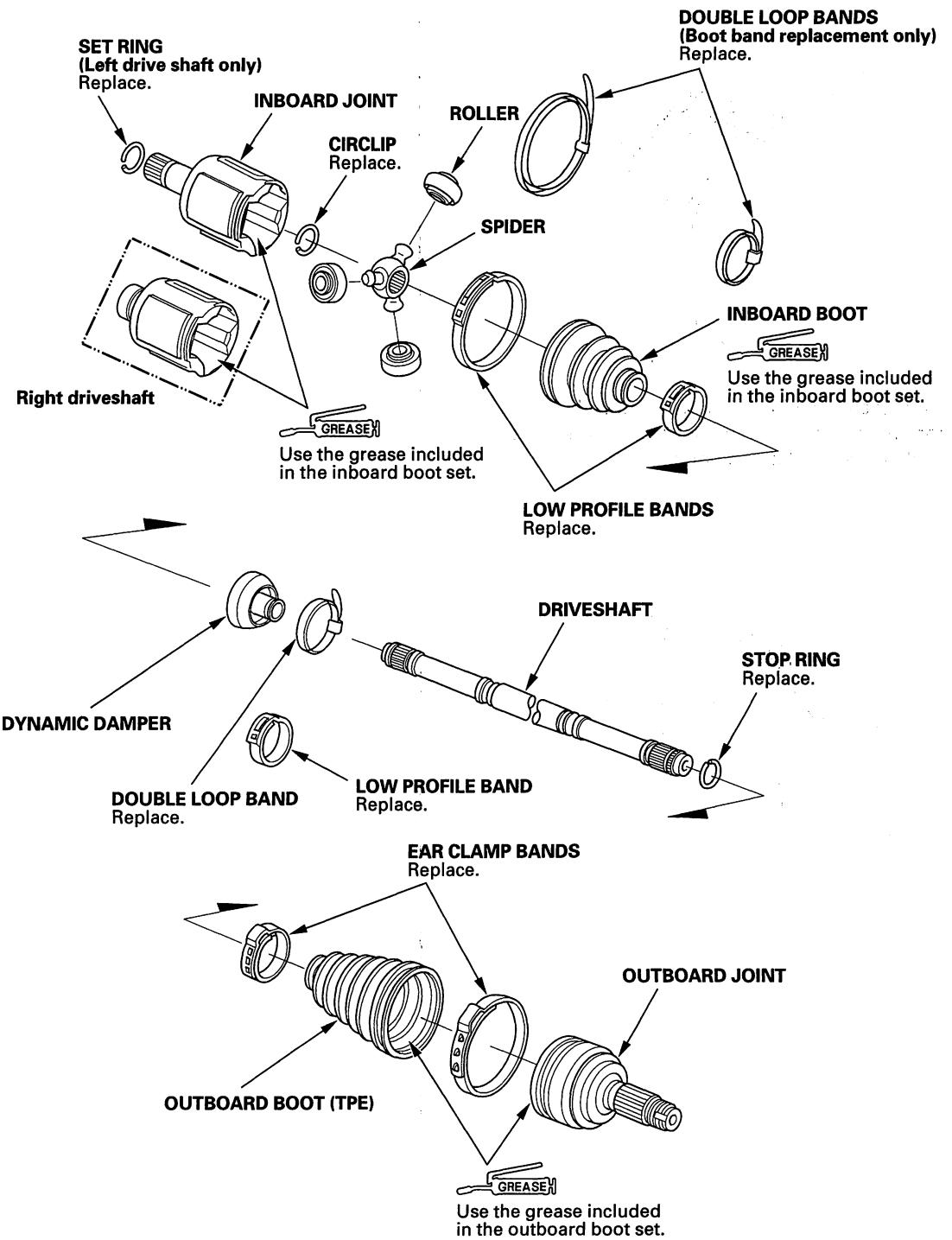




BACK

Protected by AR

NOTE: Refer to the Exploded View, as needed, during this procedure.

## Inboard Joint Side

1. Wrap the splines with vinyl tape (A) to prevent damage to the inboard boot.

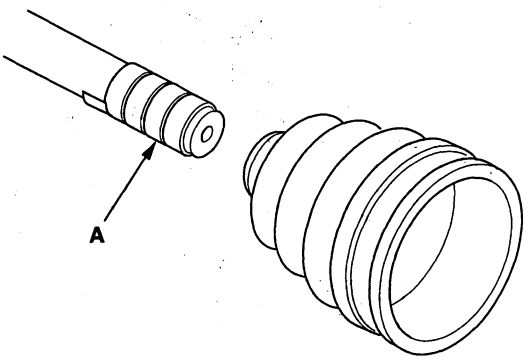


2. Install the inboard boot onto the driveshaft, then remove the vinyl tape. Be careful not to damage the inboard boot.

3. Install the spider (A) onto the driveshaft by aligning the marks (B) you made on the spider and the end of the driveshaft.

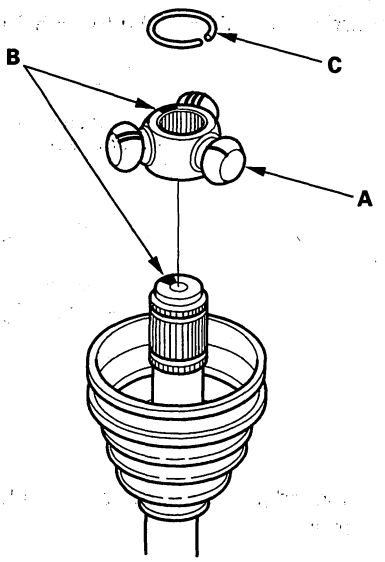


4. Install a new circlip (C) into the driveshaft groove. Rotate the circlip in its groove to make sure it is fully seated.

5. Fit the rollers (A) onto the spider (B) with the high shoulders facing outward, and note these items:

   - Reinstall the rollers in their original positions on the spider by aligning the marks (C) you made.
   - Hold the driveshaft pointing up to prevent the rollers from falling off.

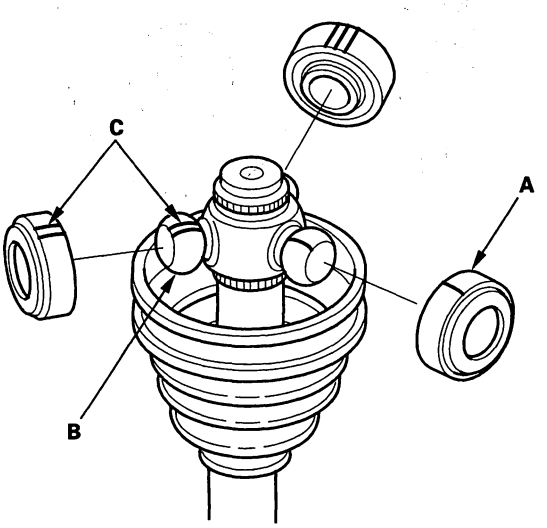


(cont'd)

Protected by AR



## Front Driveshaft Reassembly (cont'd)

6. Pack the inboard joint with the joint grease included in the new driveshaft set.

   **Grease quantity**
   **Inboard joint: 150—160 g (5.3—5.6 oz)**

7. Fit the inboard joint onto the driveshaft, and note these items:

   - Reinstall the inboard joint onto the driveshaft by aligning the marks (A) you made on the inboard joint and the rollers.
   - Hold the driveshaft so the inboard joint is pointing up to prevent it from falling off.

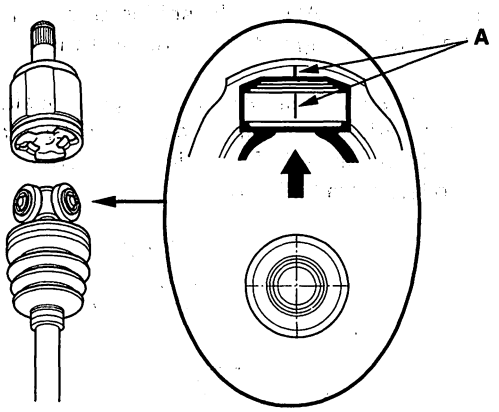


8. Fit the boot ends (A) onto the driveshaft (B) on the inboard joint (C), then install the new boot band onto the boot (see page 16-11).

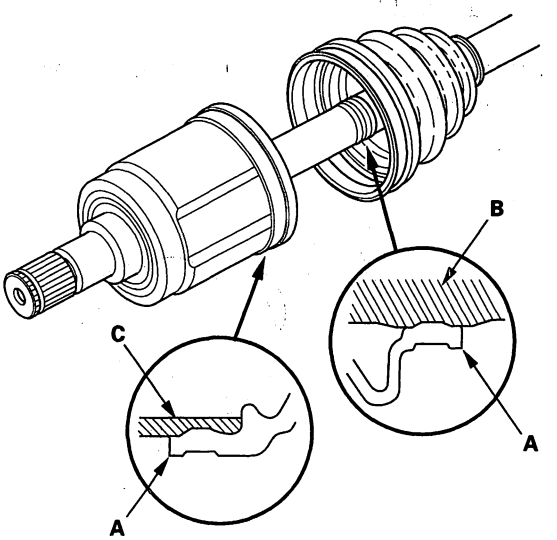


9. Repeat step 8 for the band on the other end of the boot, then go to step 10.

10. Install the new set ring (A) into the inboard joint groove (B) of the left driveshaft. The right driveshaft does not have a set ring.

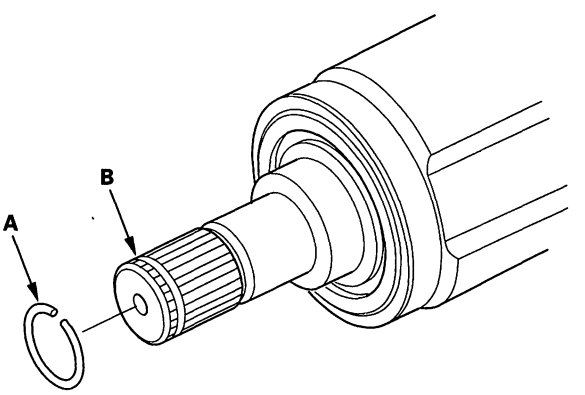




BACK

Protected by AR

## Outboard Joint Side

1. Wrap the splines with vinyl tape (A) to prevent damage to the outboard boot.

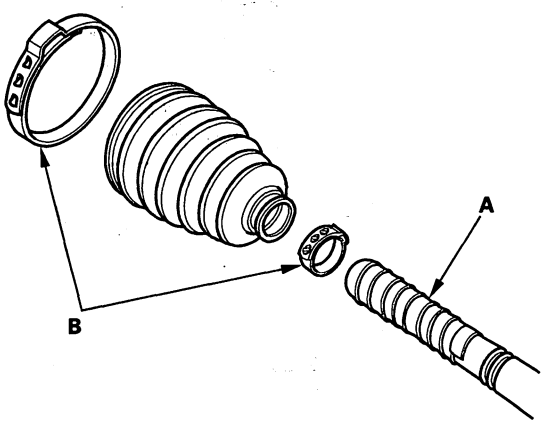


2. Install the new ear clamp bands (B) and outboard boot, then remove the vinyl tape. Be careful not to damage the outboard boot.

3. Install the new stop ring (A) into the driveshaft groove (B).

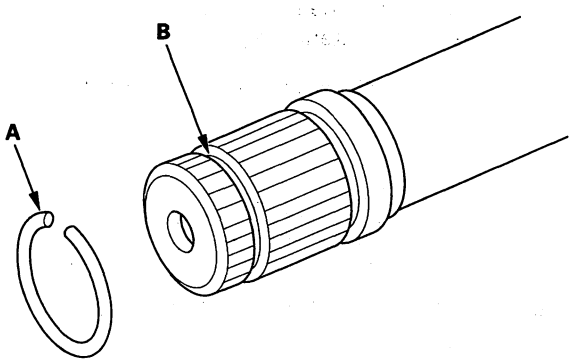


4. Insert the driveshaft (A) into the outboard joint (B) until the stop ring (C) is closed.

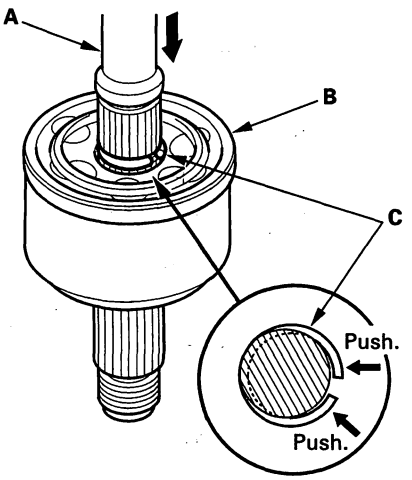


5. To completely seat the outboard joint, pick up the driveshaft and joint, and tap them from about 10 cm (4 in.) onto a hard surface. Do not use a hammer as excessive force may damage the driveshaft. Be careful not to damage the threaded section (A) of the outboard joint.

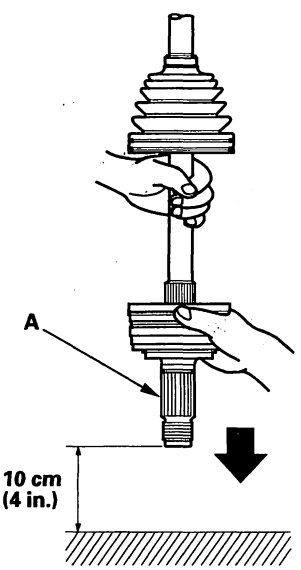


(cont'd)

Protected by AR



## Front Driveshaft Reassembly (cont'd)

6. Check the alignment of the paint mark (A) with the outboard joint end (B).

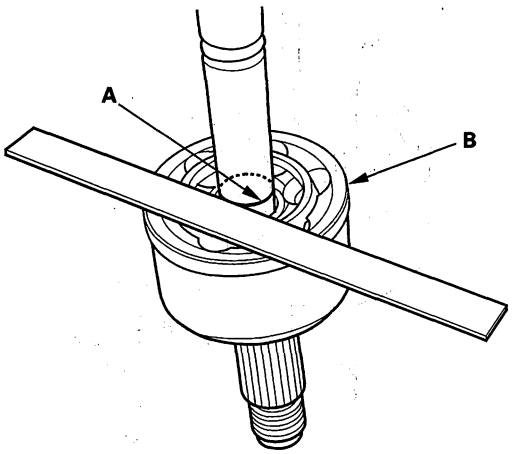


7. Pack the outboard joint (A) with the joint grease included in the new joint boot set.

**Grease quantity**
**Outboard joint: 140—150 g (4.9—5.3 oz)**

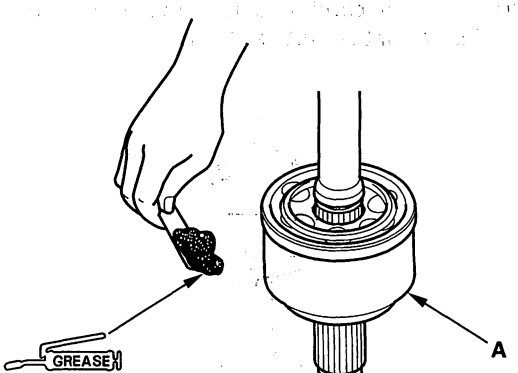


Use the grease included in the outboard boot set.

8. Fit the boot (A) ends onto the driveshaft (B) and outboard joint (C).

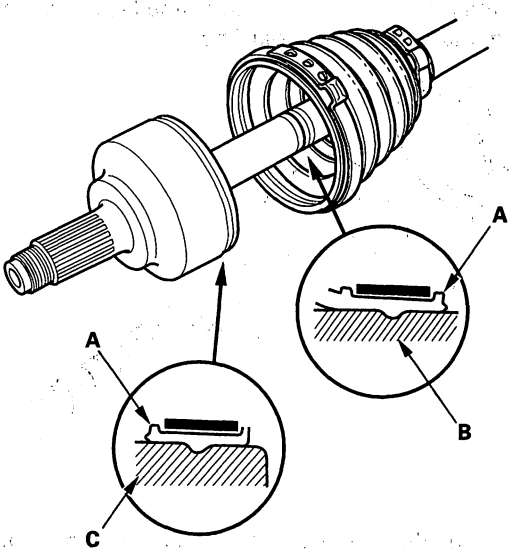


9. Adjust the length of the driveshafts to these measurements, then adjust the boots to halfway between full compression and full extension. Make sure the ends of the boots seat in the groove of the driveshaft and joint. Doing this prevents a vacuum or too much air in the boot, preventing it from compressing or extending properly.

**Right driveshaft: 462—467 mm (18.2—18.4 in.)**

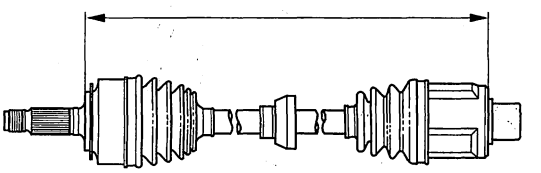

**Left driveshaft: 509—514 mm (20.0—20.2 in.)**

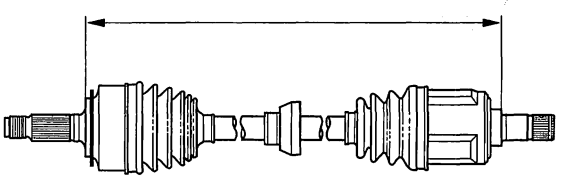

10. Install the new ear clamp band onto the boot (see page 16-11).

11. Repeat step 10 for the band on the other end of the boot.



BACK

Protected by AR

## Front Driveshaft Installation

1. Apply grease to the contact area (A) of the outboard joint and front wheel bearing.

   NOTE: The grease helps prevent noise and vibration.

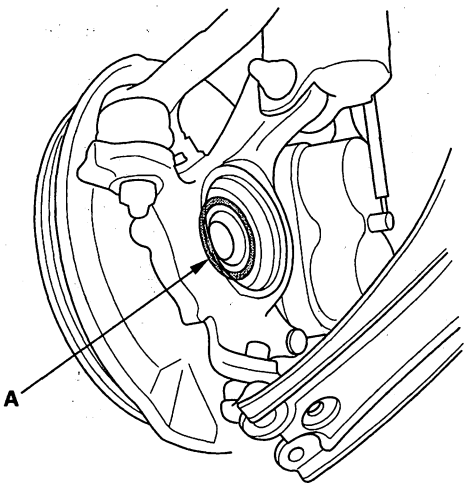


2. Install a new set ring (A) onto the set ring groove (B) of the left driveshaft. The right driveshaft does not have a set ring.

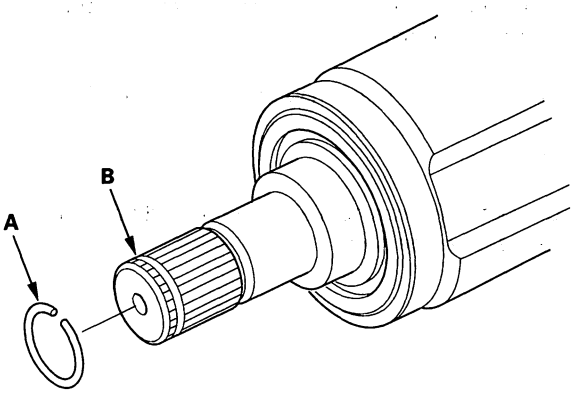


3. Apply 0.5—1.0 g (0.02—0.04 oz) of grease to the whole splined surface (A) of the right driveshaft. After applying grease, remove the grease from the splined grooves at intervals of 2—3 splines and from the set ring groove (B) so that air can bleed from the intermediate shaft.

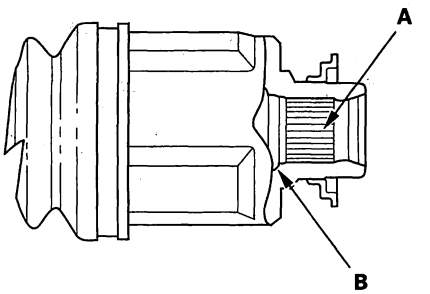


4. Clean the areas where the driveshaft contacts the differential thoroughly with solvent or brake cleaner, and dry with compressed air. Insert the inboard end (A) of the driveshaft into the differential (B) or intermediate shaft (C) until the set ring (D) locks in the groove (E).

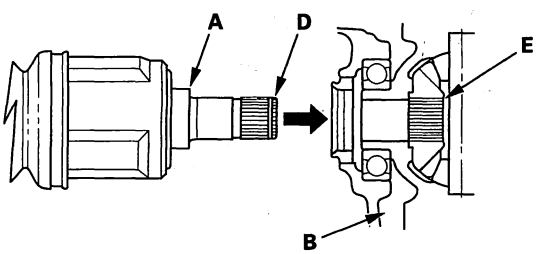


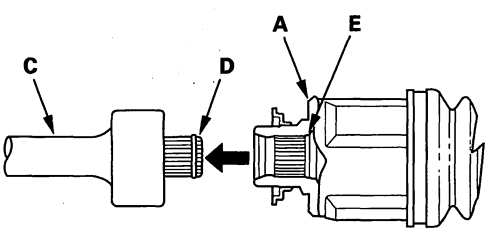


(cont'd)

Protected by AR



## Front Driveshaft Installation (cont'd)

5. Install the outboard joint (A) into the front hub (B).

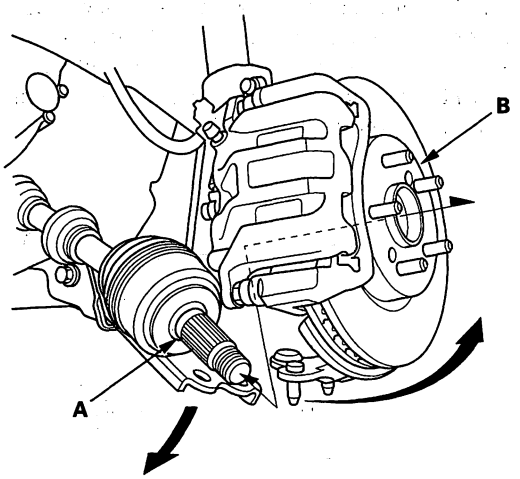


6. Install the knuckle (A) onto the lower arm (B). Then tighten the nuts and bolt (C) to the lower torque specification.

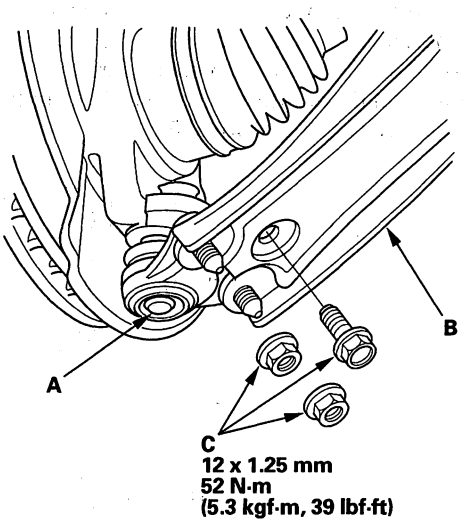


7. Install a new spindle nut (A), then tighten the nut. After tightening, use a drift to stake the spindle nut shoulder (B) against the driveshaft.

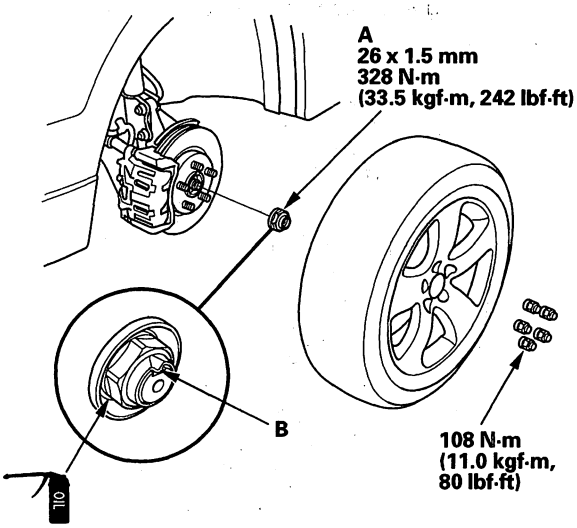


8. Clean the mating surfaces of the brake disc and the front wheel, then install the front wheels.

9. Turn the front wheels by hand, and make sure there is no interference between the driveshaft and surrounding parts.

10. Refill the transmission with recommended transmission fluid if you reinstalled the right driveshaft.

11. Check the front wheel alignment, and adjust it if necessary (see page 18-5).



BACK

Protected by AR

## Intermediate Shaft Removal

1. Remove the right driveshaft (see page 16-4).
2. Remove the secondary HO2S from the exhaust pipe (see page 11-245).
3. Remove the heat shield (A).

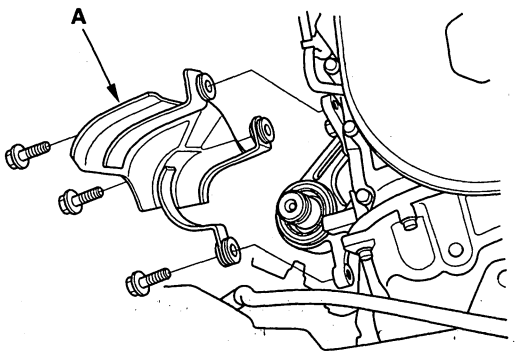


4. Remove the flange bolt (A) and the two dowel bolts (B).

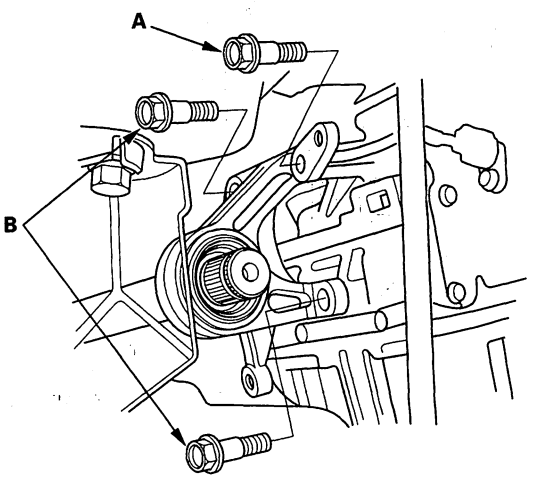


5. Remove the intermediate shaft (A) from the differential. Hold the intermediate shaft horizontally until it is clear of the differential to prevent damaging the differential oil seal (B).

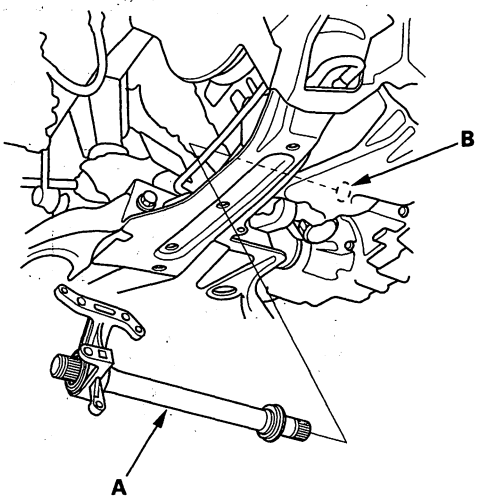

Protected by AR



## Intermediate Shaft Disassembly

**Special Tools Required**
- Oil seal driver 07947-SB00100
- Half shaft base 07NAF-SR30101

1. Remove the set ring (A), outer seal (B), and external snap ring (C).

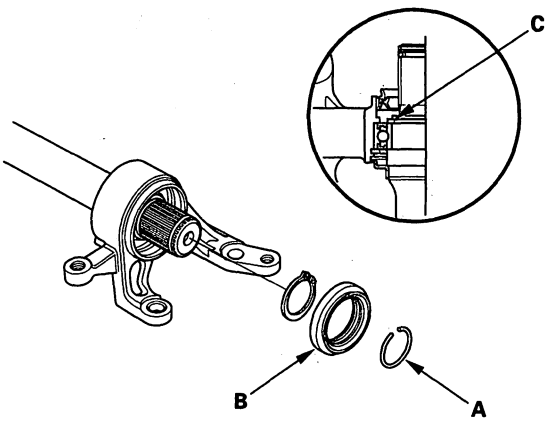


2. Press the intermediate shaft (A) out of the intermediate shaft bearing (B) using a press. Be careful not to damage the metal rings (C) on the intermediate shaft during disassembly.

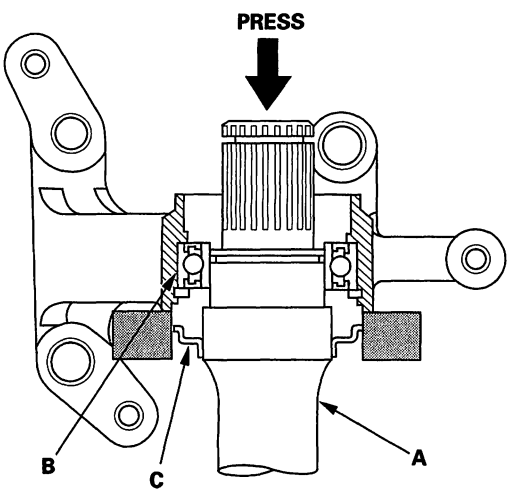


3. Remove the internal snap ring (A) from the bearing support (B).

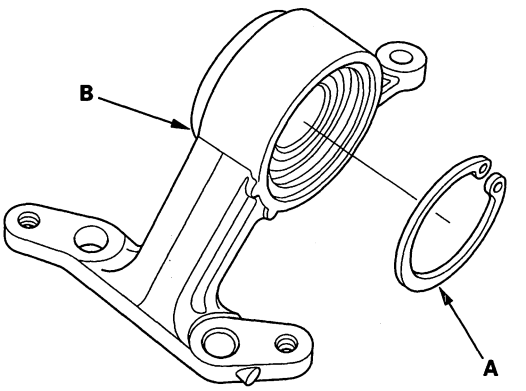


4. Press the intermediate shaft bearing (A) out of the bearing support (B) using the oil seal driver, the half shaft base, and a press.

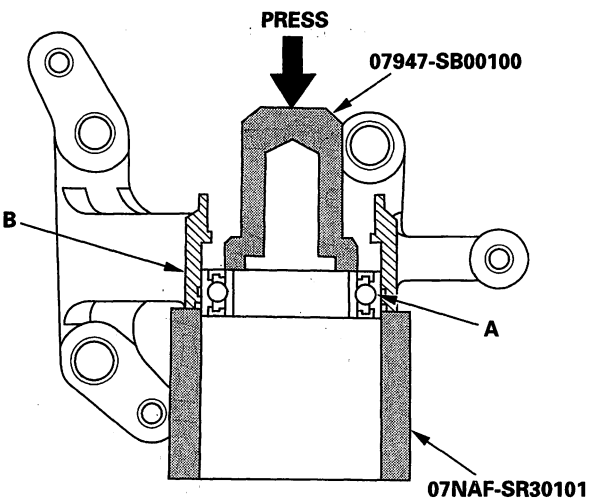




BACK

Protected by AR

## Intermediate Shaft Reassembly

### Exploded View

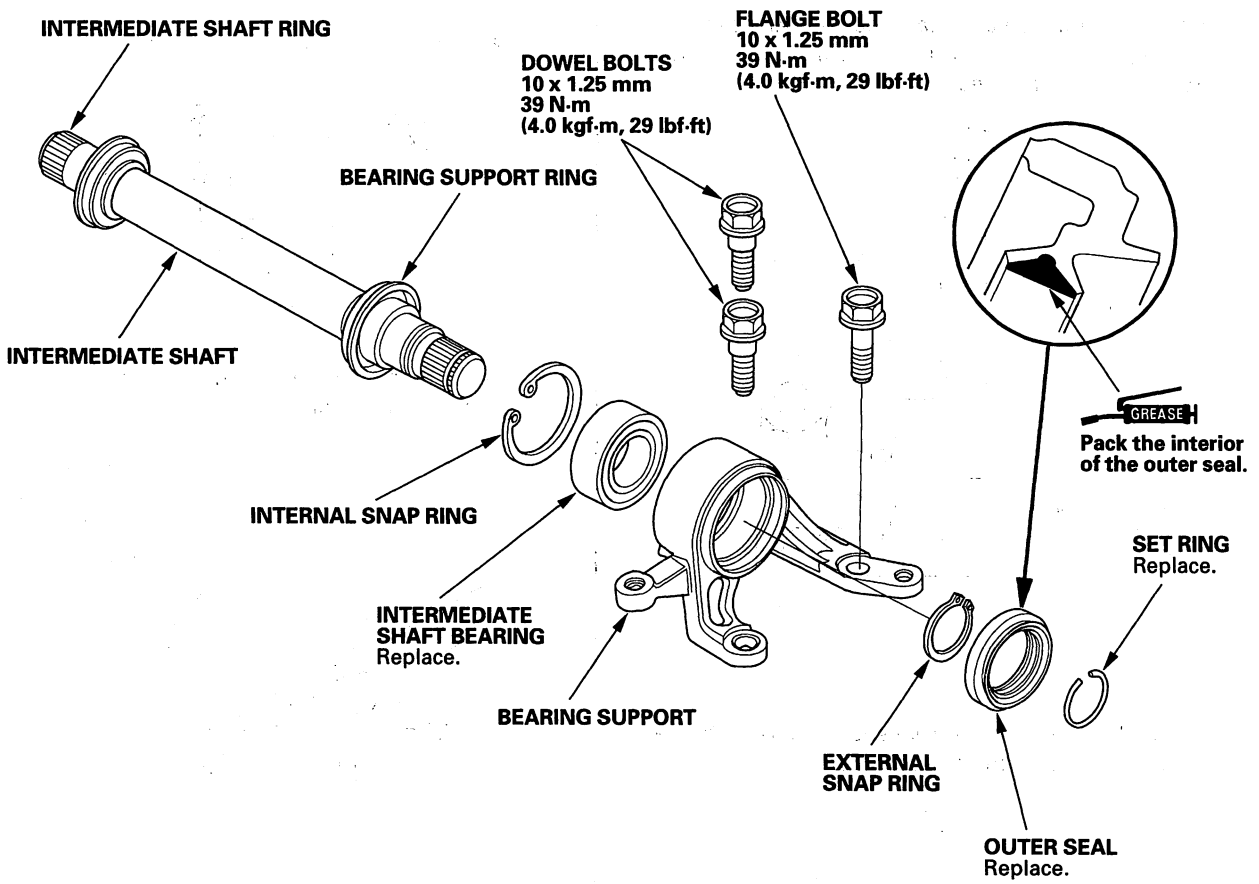


(cont'd)

Protected by AR



## Intermediate Shaft Reassembly (cont'd)

**Special Tools Required**
- Oil seal driver 07JAD-PL90100
- Attachment, 52 x 55 mm 07NAD-P200100
- Driver 07749-0010000
- Driver 07947-4630100

NOTE: Refer to the Exploded View, as needed, during this procedure.

1. Clean the disassembled parts with solvent, and dry them with compressed air. Do not wash the rubber parts with solvent.

2. Press the intermediate shaft bearing (A) into the bearing support (B) using the driver, 52 x 55 mm attachment, and a press.

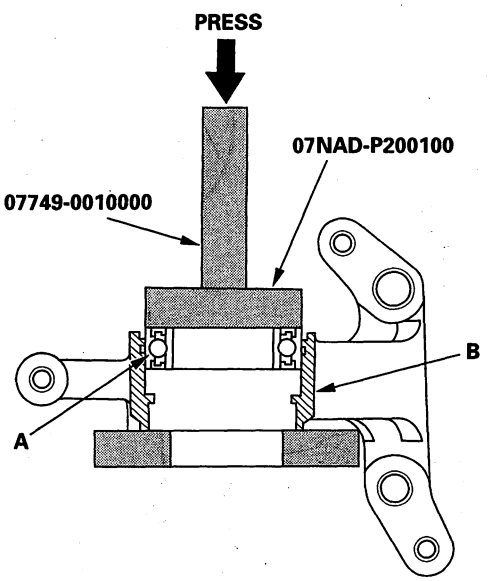


3. Install, then seat the internal snap ring (A) into the groove of the bearing support (B).

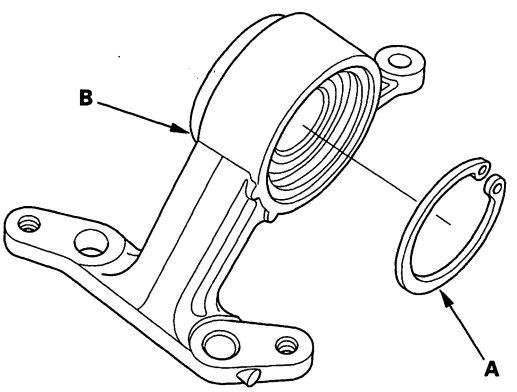


4. Press the intermediate shaft (A) into the shaft bearing (B) using the driver and a press.

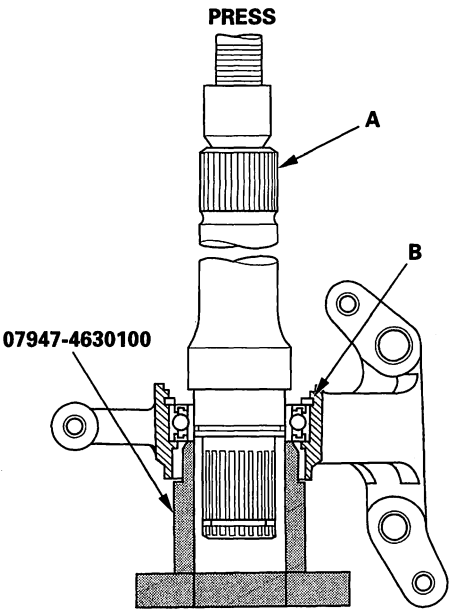


5. Install, then seat the external snap ring (A) into the groove of the intermediate shaft (B).

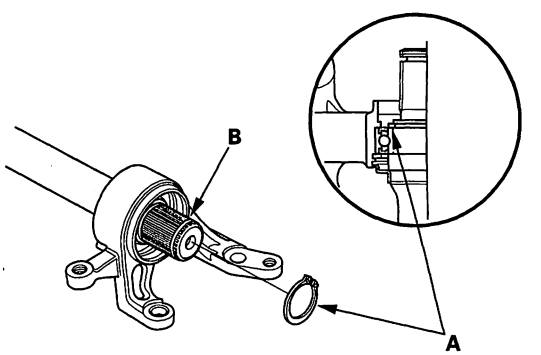




BACK

Protected by AR

6. Install a new outer seal (A) into the bearing support (B) using the oil seal driver and a press.

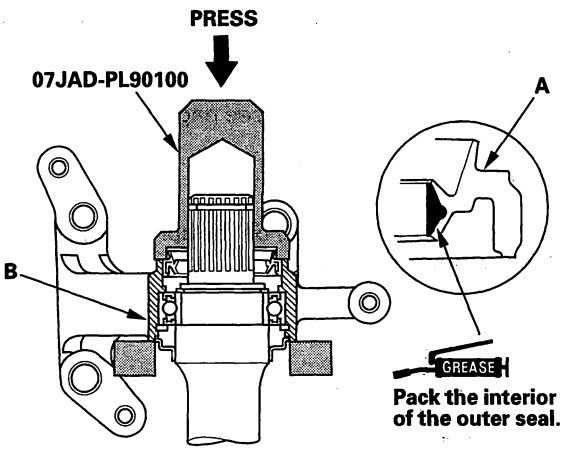


7. Install a new set ring (A) onto the set ring groove (B) of the intermediate shaft.

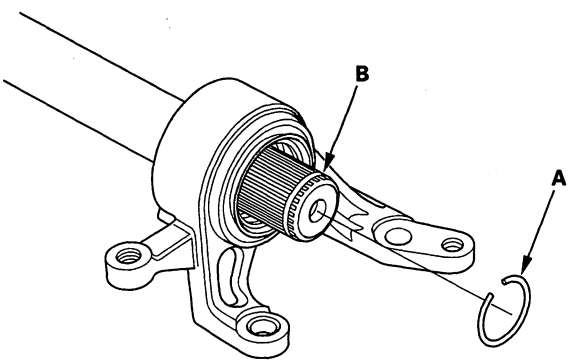


## Intermediate Shaft Installation

1. Use solvent or brake cleaner to thoroughly clean the areas where the intermediate shaft (A) contacts the transmission (differential), and dry with compressed air. Insert the intermediate shaft assembly into the differential. Hold the intermediate shaft horizontally to prevent damage to the differential oil seal (B).

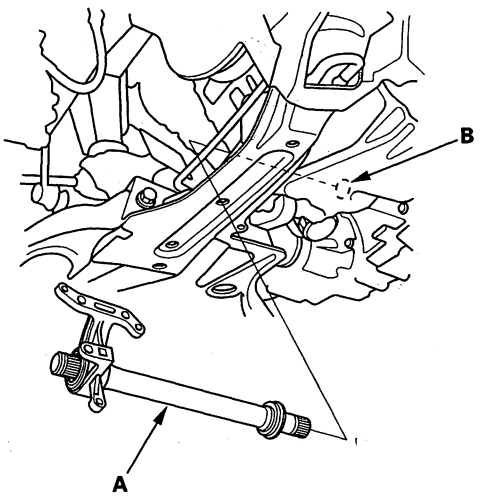


2. Install the flange bolt (A) and the two dowel bolts (B).

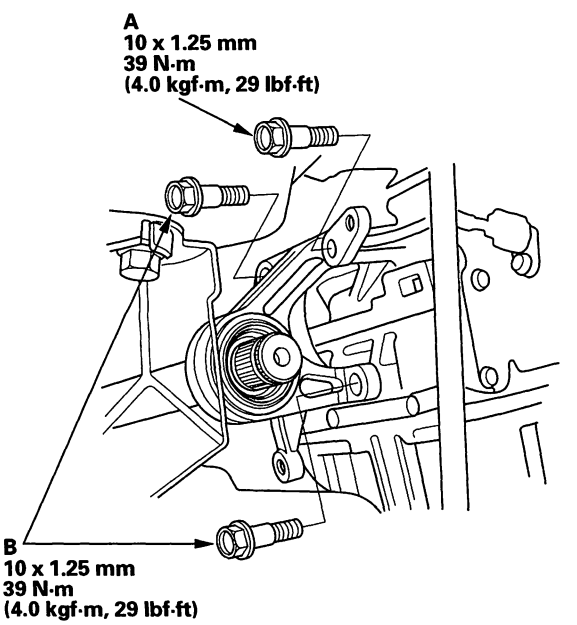


(cont'd)

Protected by AR



## Intermediate Shaft Installation (cont'd)

3. Install the heat shield, and tighten the three bolts.

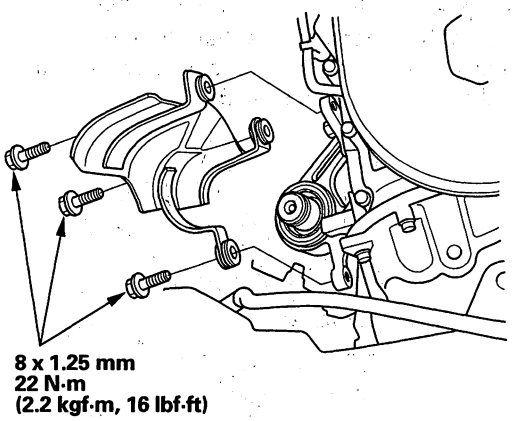


4. Install the secondary HO2S in the exhaust pipe (see page 11-245).

5. Install the right driveshaft (see page 16-19).

## Rear Driveshaft Removal

**Special Tools Required**
Driveshaft remover 07AAD-S3VA000

NOTE: Be careful not to damage the brake hose, sensor, and harness.

1. Raise the vehicle on a lift (see page 1-7).

2. Remove the rear wheels.

3. Lift up the locking tab (A) on the spindle nut (B), then remove the nut.

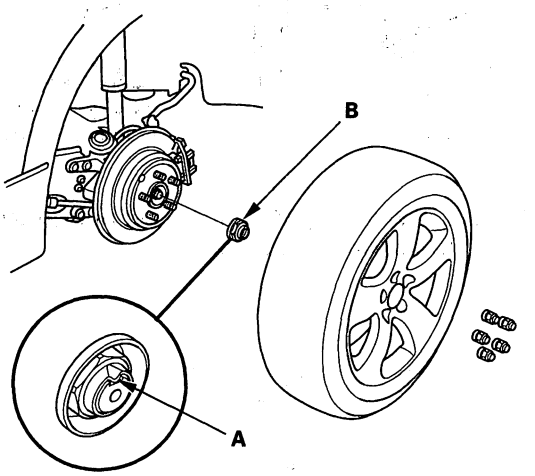




BACK

Protected by AR

4. Remove lower arm A.

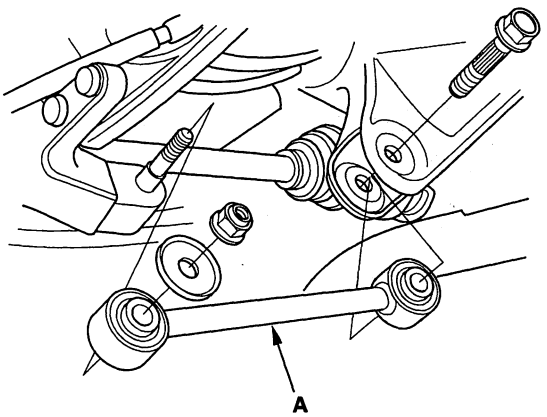


5. Remove the flange bolt (A) and separate the knuckle from lower arm B.

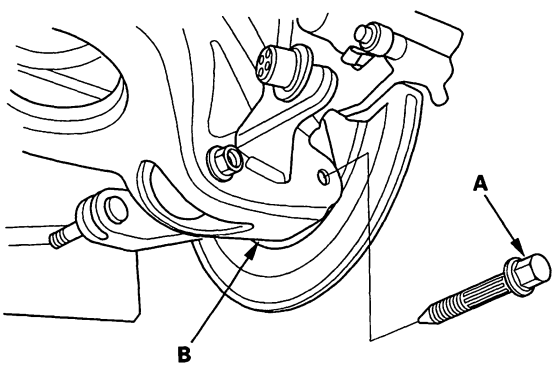


6. Loosen the rear driveshaft outboard joint from the rear wheel hub using a plastic hammer.

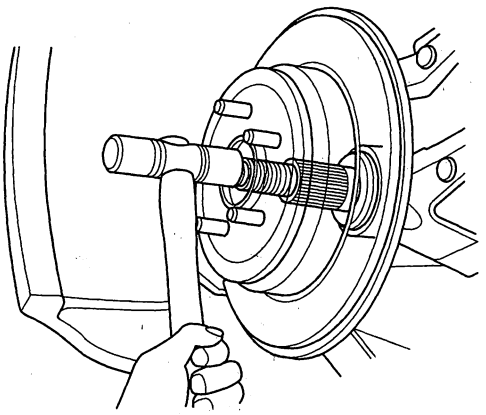

(cont'd)

Protected by AR



## Rear Driveshaft Removal (cont'd)

7. Pull the knuckle (A) outward, and remove the rear driveshaft outboard joint (B).

   NOTE: When removing the outboard joint, the knuckle is supported. Make sure not to over extend the brake hose.

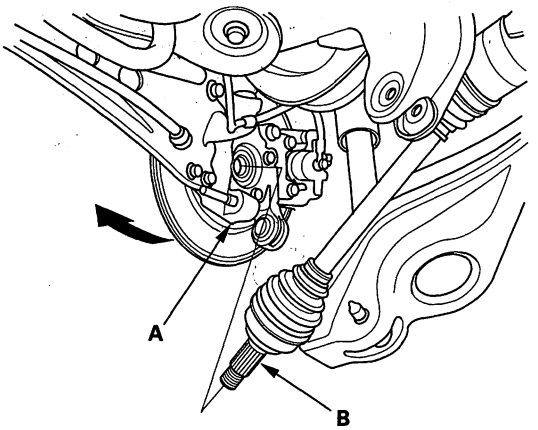


8. Use a hammer to wedge the driveshaft remover between the inboard joint (A) and the differential (B).

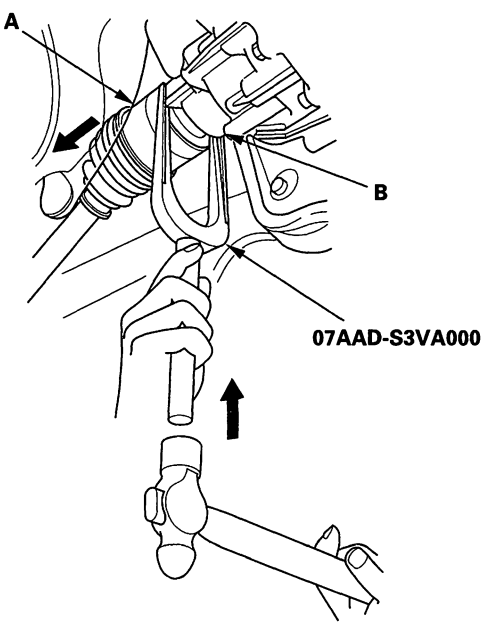


9. Remove the rear driveshaft.

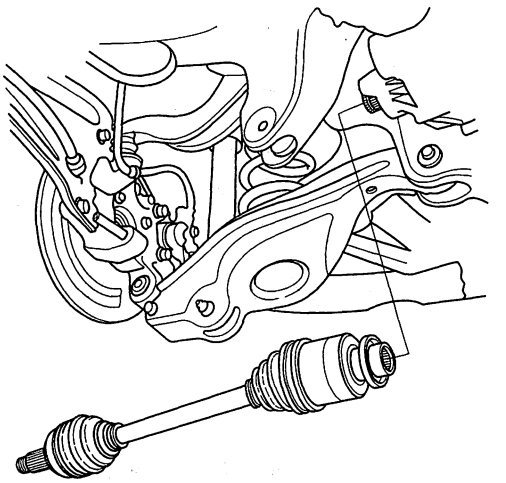



BACK

Protected by AR

# Rear Driveshaft Disassembly

**Special Tools Required**
Threaded adapter, 24 x 1.5 mm 07XAC-001020A

## Inboard Joint Side

1. Remove the boot bands. Be careful not to damage the boot (see page 16-6).

2. Remove the circlip (A).

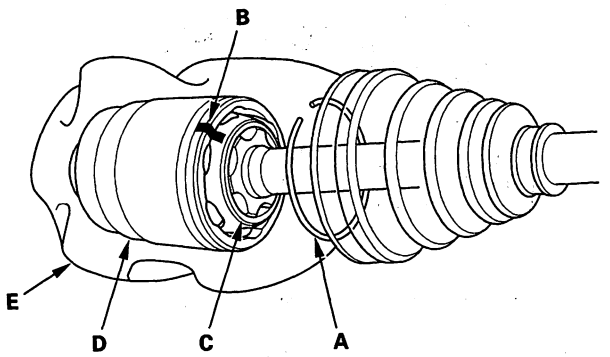


3. Make a mark (B) on the bearing retainer (C) and inboard joint (D) to identify the locations of the ball bearings and the grooves in the inboard joint. Then remove the inboard joint on a shop towel (E). Be careful not to drop the ball bearings when separating them from the inboard joint.

4. Remove the snap ring (A).

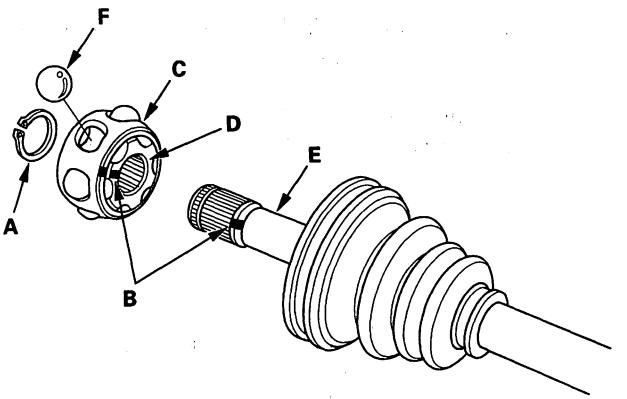


5. Make a mark (B) on the bearing retainer (C), the bearing race (D), and driveshaft (E) to identify the position of the bearing retainer and the bearing race on the shaft.

6. Remove the bearing race and the steel ball bearings (F).

7. Wrap the splines on the driveshaft (A) with vinyl tape (B) to prevent damage to the boot.

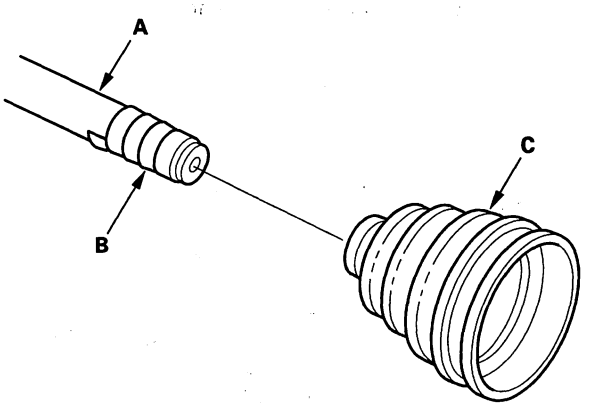


8. Remove the inboard boot (C). Be careful not to damage the boot.

9. Remove the vinyl tape.

(cont'd)

Protected by AR



## Rear Driveshaft Disassembly (cont'd)

### Outboard Joint Side

1. Remove the boot bands. Be careful not to damage the boot (see page 16-6).
2. Slide the outboard boot (A) partially to the inboard joint side. Be careful not to damage the boot.

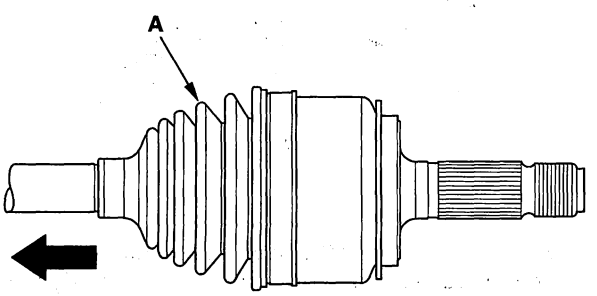


3. Wipe off the grease to expose the driveshaft and the outboard joint inner race.
4. Make a mark (A) on the driveshaft (B) at the same position of the outboard joint end (C).

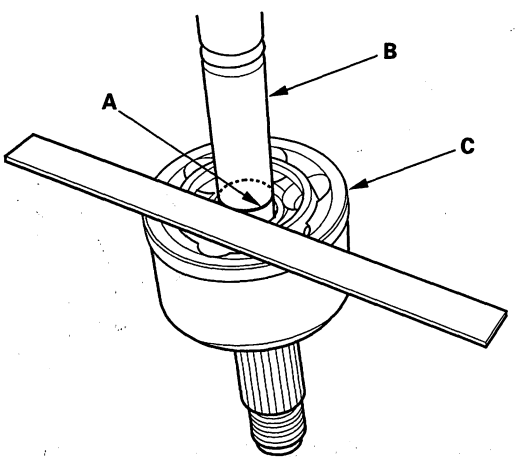


5. Carefully clamp the driveshaft in a vise.
6. Remove the outboard joint (A) using the threaded adapter and a commercially available 5/8" x 18 UNF slide hammer (B).

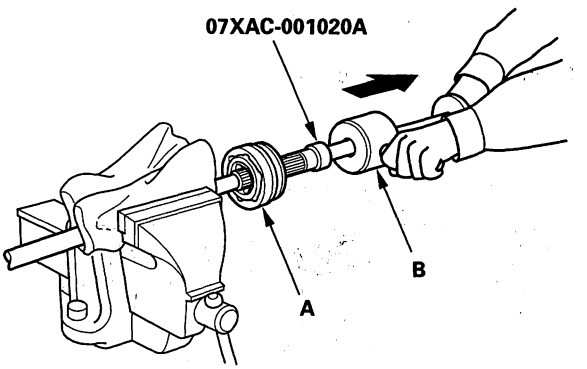


7. Remove the driveshaft from the vise.
8. Remove the stop ring (A) from the driveshaft groove (B).

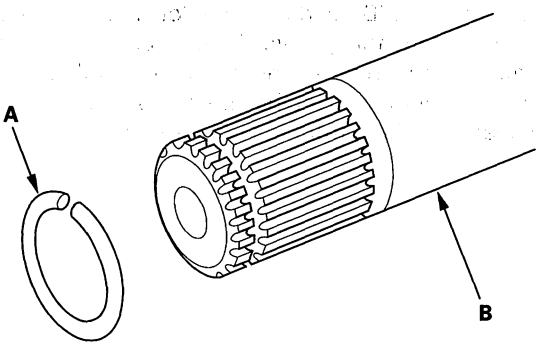




BACK

Protected by AR

## Rear Driveshaft Reassembly

### Exploded View

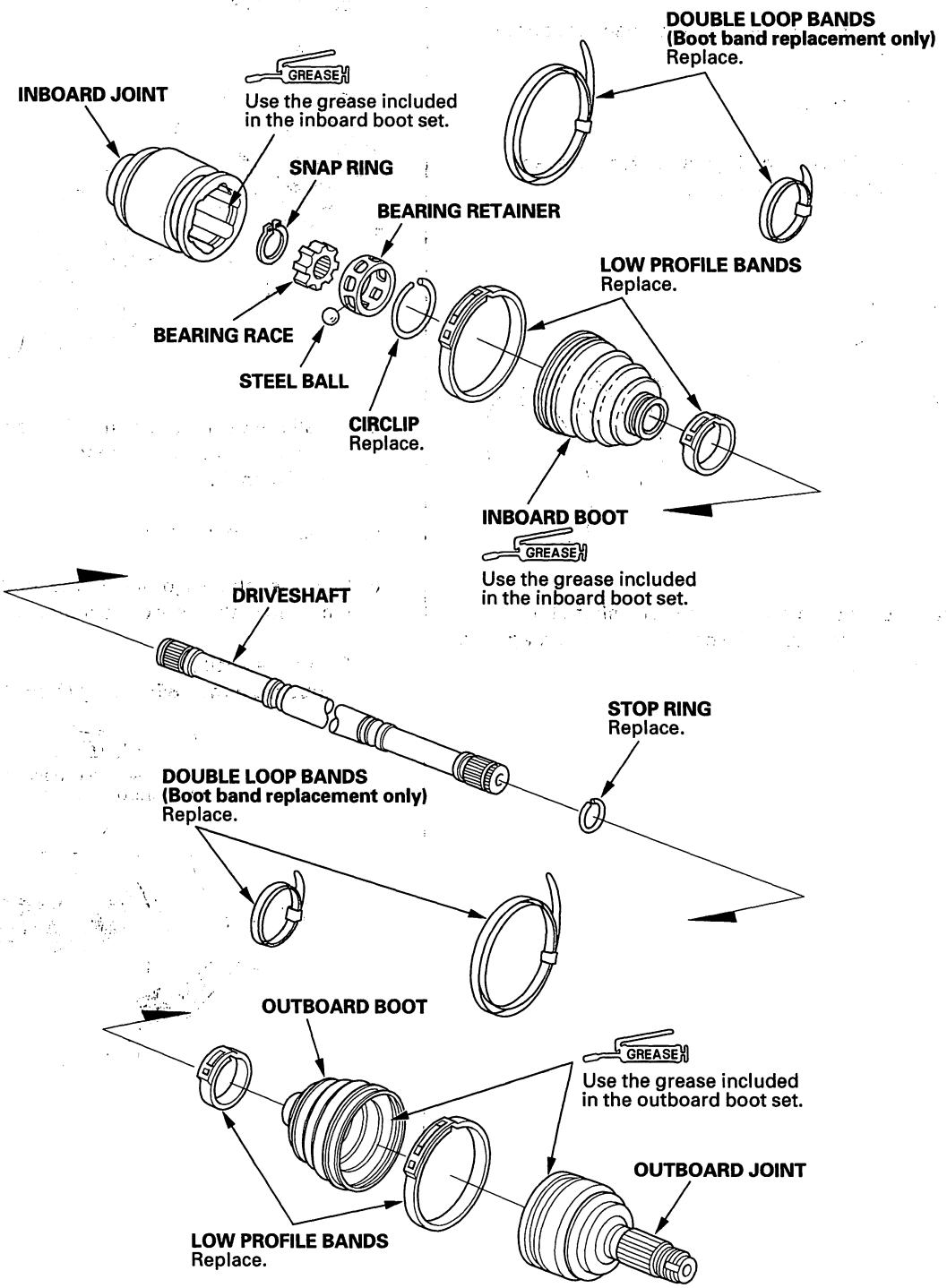


(cont'd)

BACK

Protected by AR



## Rear Driveshaft Reassembly (cont'd)

**Special Tools Required**
Boot band tool, KD-3191 or equivalent, commercially available

NOTE: Refer to the Exploded View, as needed, during this procedure.

### Inboard Joint Side

1. Wrap the splines with vinyl tape (A) to prevent damaging to the inboard boot.

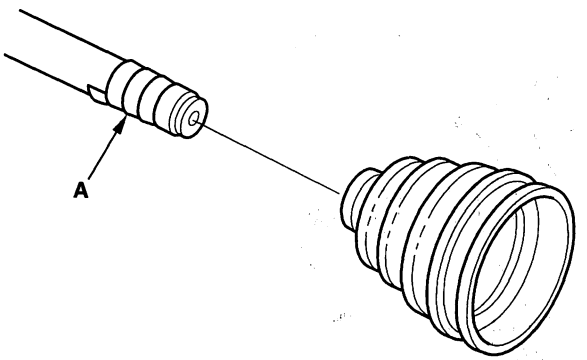


2. Install the inboard boot on the driveshaft, then remove the vinyl tape. Be careful not to damage the inboard boot.

3. Install the steel balls (A) and the bearing retainer (B) onto the bearing race (C) by aligning the marks (D) you made on the bearing retainer and the bearing race.

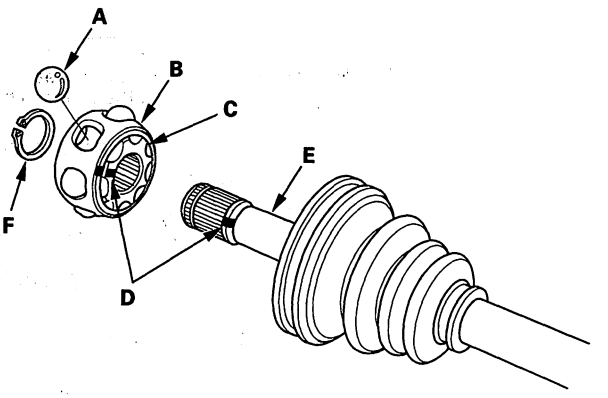


4. Install the bearing onto the driveshaft (E) by aligning the marks you made on the bearing and the driveshaft.

5. Install the snap ring (F).

6. Pack the inboard joint with the joint grease included in the new driveshaft set.

**Grease quantity**
**Inboard joint: 85—105 g (3.0—3.7 oz)**

BACK

Protected by AR

7. Install the inboard joint onto the driveshaft by aligning the marks (A) you made on the inboard joint and driveshaft.

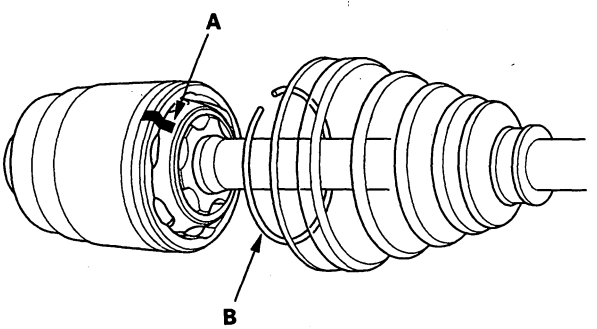


8. Install the circlip (B).

9. Adjust the length of the driveshafts to the figure as shown, then adjust the boots to halfway between full compression and full extension. Make sure the ends of the boots seat in the grooves of the driveshaft and joint. Doing this prevents vacuum or too much air in the boot, preventing it from compressing or extending properly.

   **Left driveshaft: 536.3—541.3 mm (21.1—21.3 in.)**
   **Right driveshaft: 546.3—551.3 mm (21.5—21.7 in.)**

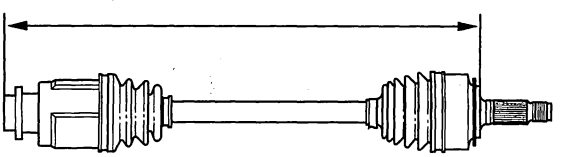

10. Fit the boot ends onto the driveshaft and the inboard joint, then install the new boot band onto the boot (see page 16-11).

11. Install the boot band on the other end of the boot, and repeat step 10.

## Outboard Joint Side

1. Wrap the splines with vinyl tape (A) to prevent damaging to the outboard boot.

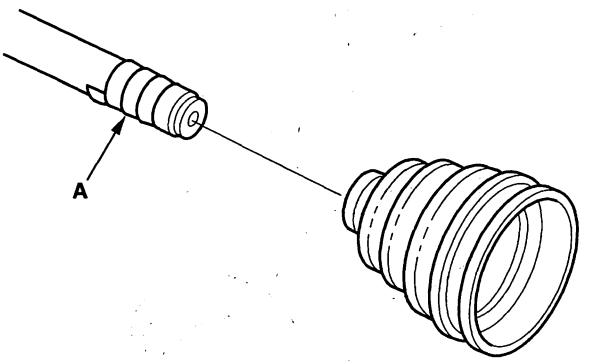


2. Install the outboard boot and the new low profile band on the driveshaft, then remove the vinyl tape. Be careful not to damage the outboard boot (see page 16-11).

3. Install the new stop ring (A) in the driveshaft groove (B).

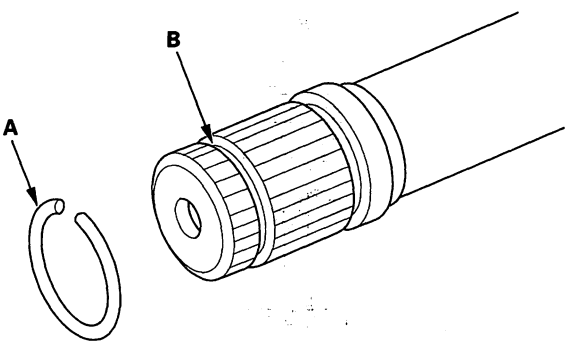


(cont'd)

Protected by AR



## Rear Driveshaft Reassembly (cont'd)

4. Pack about half of the grease included in the new joint boot set into the driveshaft hole in the outboard joint. Insert the driveshaft (A) into the outboard joint (B) until the stop ring (C) is closed.

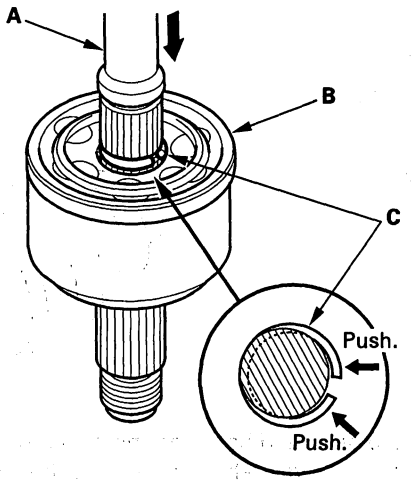


5. To completely seat the outboard joint, pick up the driveshaft and joint, and tap them on a hard surface. Do not use a hammer as excessive force may damage the driveshaft. Be careful not to damage the threaded section (A) of the outboard joint.

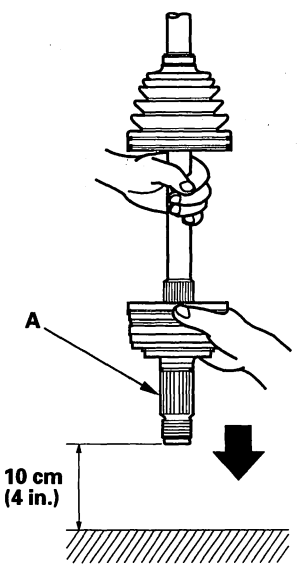


6. Check the alignment of the paint mark (A) with the outboard joint end (B).

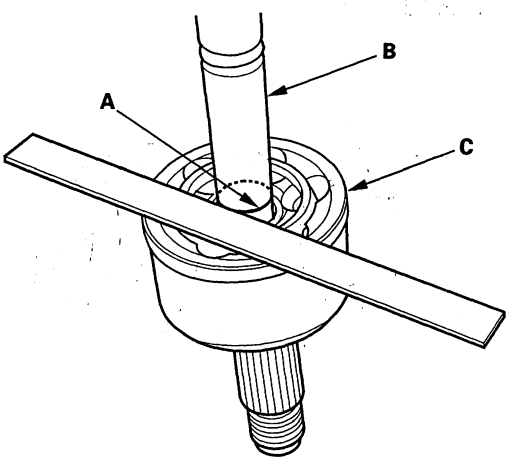


7. Pack the outboard joint (A) with the remaining joint grease included in the new joint boot set.

**Grease quantity (total)**
**Outboard joint: 75—95 g (2.6—3.4 oz)**

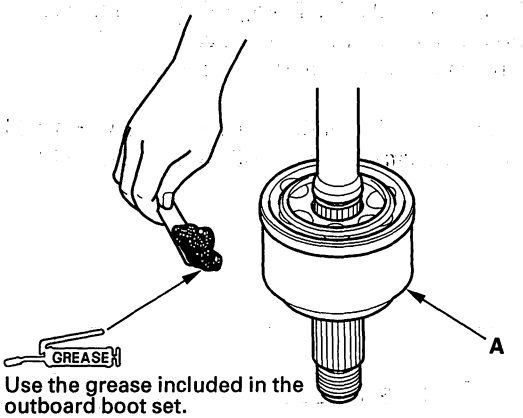


Use the grease included in the outboard boot set.

8. Fit the boot ends onto the driveshaft and the outboard joint, then install the new low profile band onto the boot (see page 16-11).

9. Install the boot band on the other end of the boot, and repeat step 8.



BACK

Protected by AR

## Rear Driveshaft Installation

NOTE: Before starting the installation, make sure the mating surfaces of the joint and the splined section are free of dirt or dust.

1. Apply 1.5—2.0 g (0.05—0.07 oz) of grease to the whole splined surface (A). After applying grease, remove the grease from the splined grooves at intervals of 2—3 splines and from the set ring groove (B) so that air can bleed from the differential.

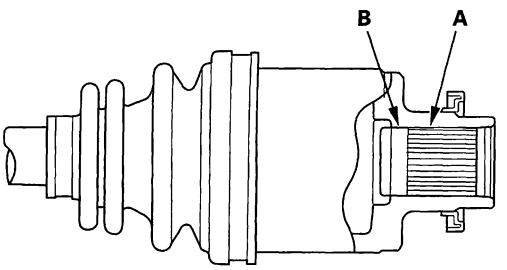


2. Replace the new set ring (A) in the set ring groove of the differential.

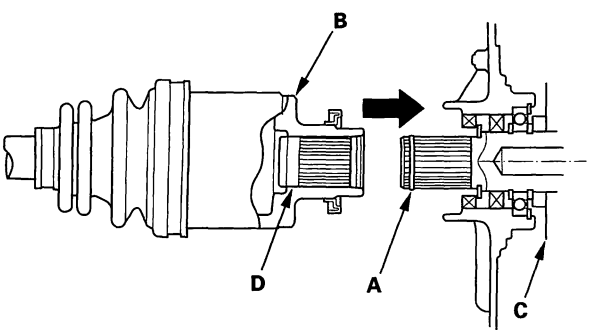


3. Clean the areas where the driveshaft contacts the differential thoroughly with solvent or brake cleaner, and dry with compressed air. Insert the inboard end (B) of the driveshaft into the differential (C) until the set ring locks in the groove (D).

4. Pull the knuckle (A) outward, and install the rear drive shaft outboard joint (B) into the rear hub.

   NOTE: When installing the outboard joint support, the knuckle. Make sure not to over extend the brake hose.

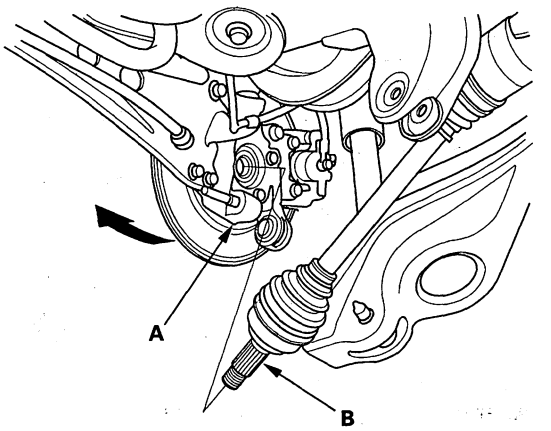


5. Install the flange bolt (A) onto lower arm B.

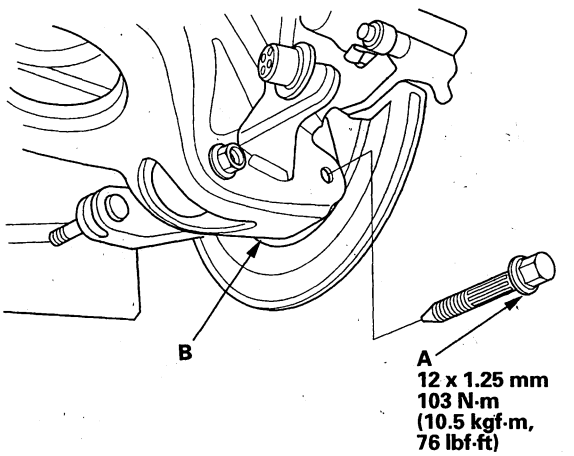


(cont'd)

Protected by AR



## Rear Driveshaft Installation (cont'd)

6. Install lower arm A.

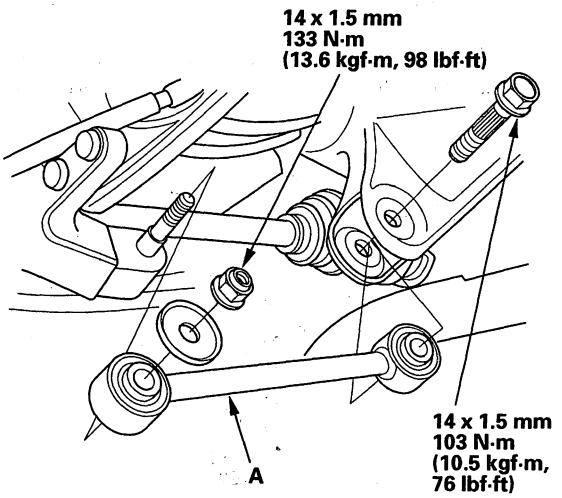


7. Install a new spindle nut (A), then tighten the nut. After tightening, use a drift to stake the spindle nut shoulder (B) against the driveshaft.

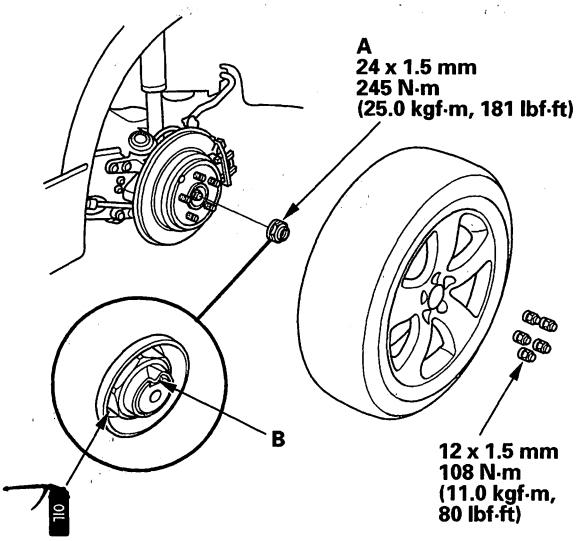


8. Clean the mating surfaces of the brake disc and the rear wheel, then install the rear wheels.

9. Turn the rear wheel by hand, and make sure there is no interference between the driveshaft and surrounding parts.

10. Check the rear wheel alignment, and adjust it if necessary (see page 18-5).



BACK

Protected by AR

# Propeller Shaft Inspection

### Universal Joint and Boots

1. Set the parking brake, and shift the transmission to the N position.

2. Raise the vehicle on a lift (see page 1-7).

3. Check the center support bearing (A) for excessive play or rattle. If the center support has excessive play or rattles, replace the propeller shaft assembly (see page 16-38).

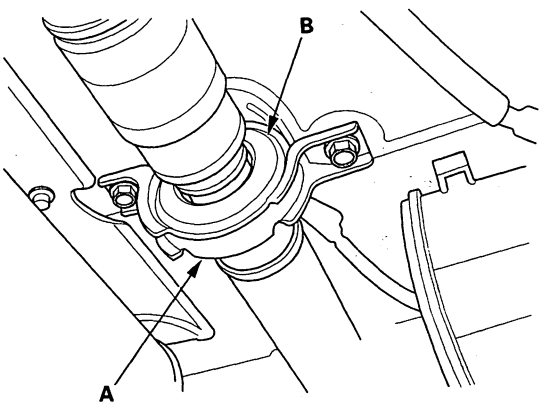


4. Check the rubber portion of the mount (B) for damage and deterioration. If the boots are damaged or deteriorated, replace the propeller shaft assembly (see page 16-38).

5. Check the universal joints for excessive play or rattle. If the universal joints have excessive play or rattle, replace the propeller shaft assembly (see page 16-38).

### Propeller Shaft Runout

6. Install a dial indicator with its needle on the center of the No. 1 propeller shaft or the No. 2 propeller shaft.

7. Turn the other propeller shaft slowly and check the runout. Repeat this procedure for the other propeller shaft.

**No. 1 Propeller Shaft Runout**
**Service Limit: 1.5 mm (0.06 in.)**

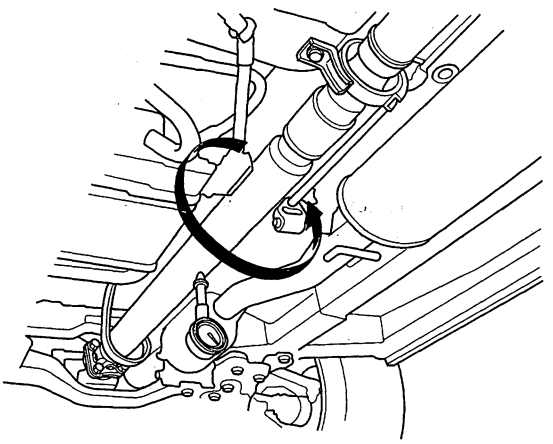

**No. 2 Propeller Shaft Runout**
**Service Limit: 1.5 mm (0.06 in.)**

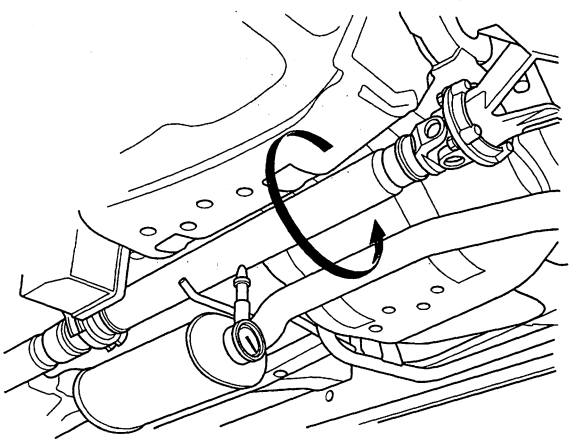

8. If the runout on either propeller shaft exceeds the service limit, replace the propeller shaft assembly (see page 16-38).

Protected by AR



## Propeller Shaft Removal

1. Raise the vehicle on a lift (see page 1-7).
2. Remove the propeller shaft protector.

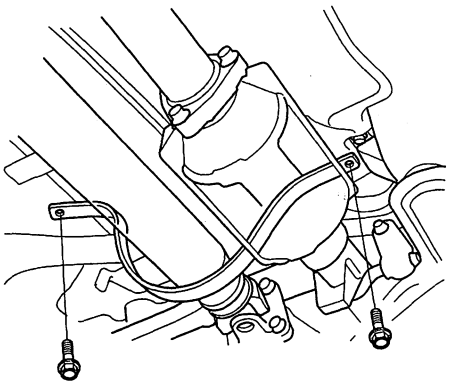

3. Make a reference mark (A) across the propeller shaft (B) and transfer companion flange (C).

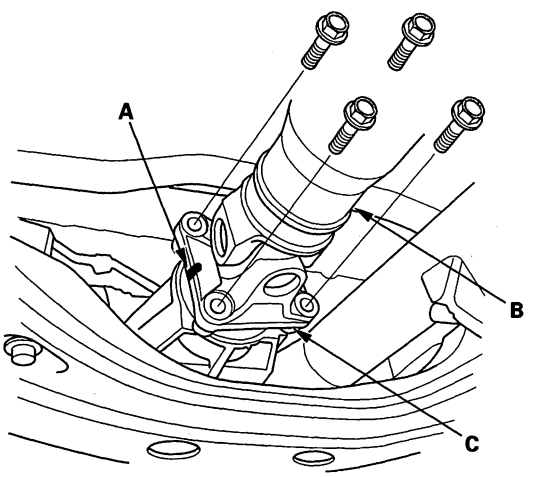


4. Separate the propeller shaft from the transfer assembly.
5. Remove the center support bearing mounting bolts.

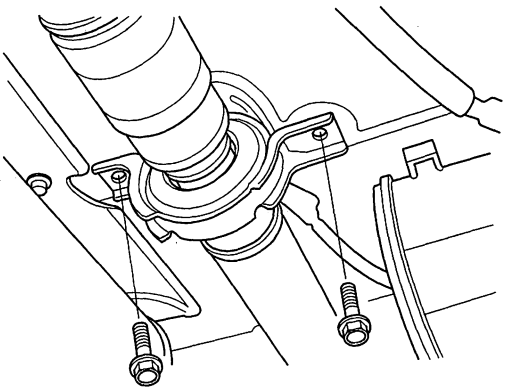

6. Make a reference mark (A) across the propeller shaft (B) and rear differential companion flange (C).

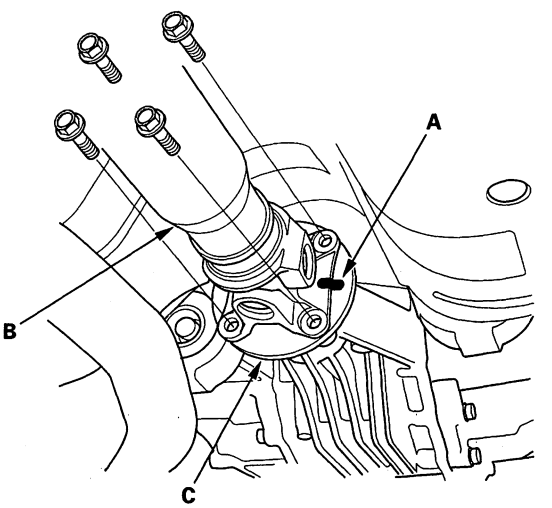


7. Separate the propeller shaft from the rear differential, then remove the propeller shaft.



BACK

Protected by AR

## Propeller Shaft Installation

1. If you are installing a new propeller shaft, go to step 2.
   If you reinstalling the original propeller shaft, go to step 3.

2. Install the new propeller shaft (A) onto the rear differential (B), by aligning the reference mark (C) on the new propeller shaft with the factory reference mark (D) on the companion flange (E). Do not use the marks you made on the companion from the removal procedure. If there are no factory marks on the companion flange, go to step 4.

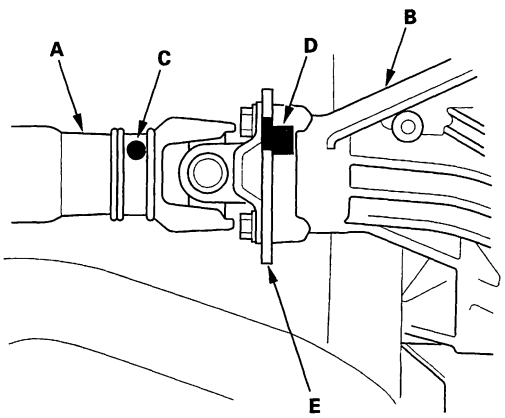


3. Reinstall the propeller shaft (A) to the rear differential (B) by aligning the reference marks (C) you made during the removal procedure.

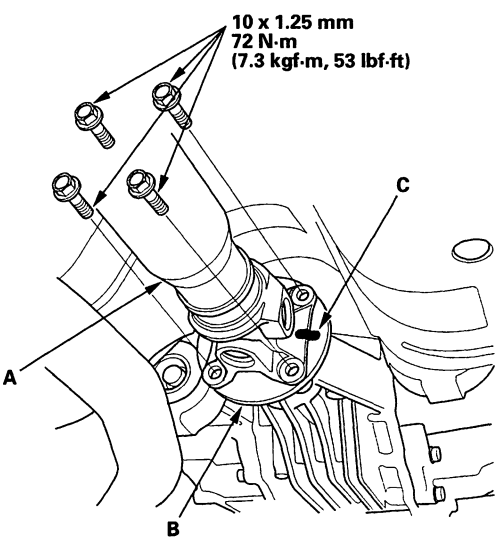


4. Attach the propeller shaft to the rear differential with new mounting bolts. Tighten the bolt to the specified torque.

5. Install the center support bearing mounting bolts. Make sure you use new bolts.

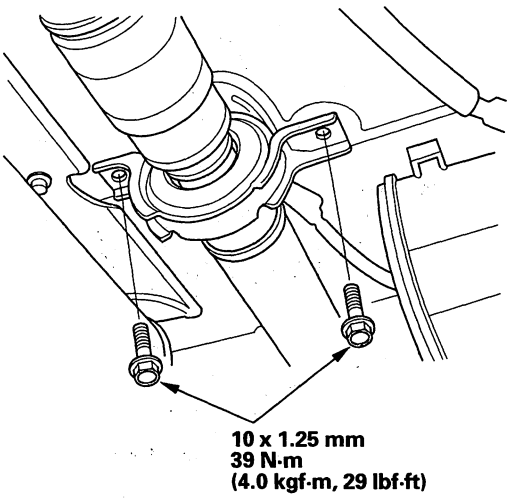


6. Install the propeller shaft (A) onto the transfer companion flange (B) by aligning the reference mark (C). Make sure you use new mounting bolts.

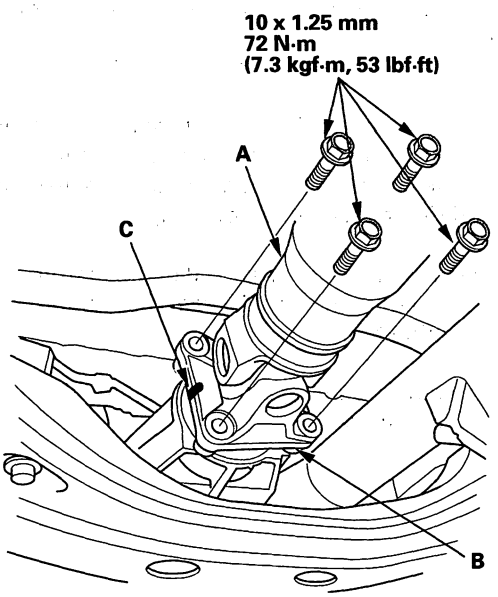


(cont'd)

Protected by AR



## Propeller Shaft Installation (cont'd)

7. Install the propeller shaft protector.

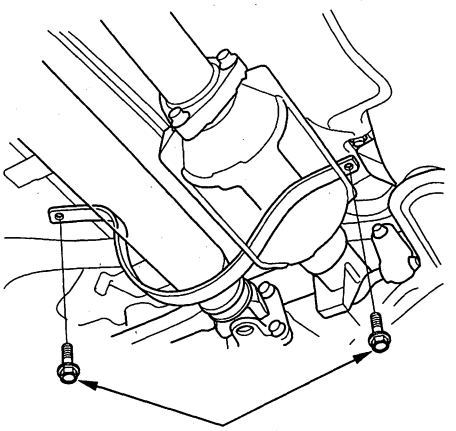

**8 x 1.25 mm**
**22 N·m**
**(2.2 kgf·m, 16 lbf·ft)**

8. If you installed a new propeller shaft, test-drive the vehicle at 55 mph (88 kph) and check for noise or vibration.
   - If there is no noise or vibration, the repair is complete.
   - If there is a noise or vibration, go to step 9.

9. Remove the mounting bolts from the propeller shaft at the rear differential companion flange. Note the current alignment of the propeller shaft to rear differential companion flange.

10. Rotate the propeller shaft 180 degrees from its current alignment with the rear differential companion flange.

11. Install new mounting bolts and tighten them to the specified torque.



BACK

Protected by AR

BACK

Protected by AR

## SUPPLEMENTAL RESTRAINT SYSTEM (SRS) (If steering maintenance is required)

The RDX SRS includes a driver's airbag in the steering wheel hub, a passenger's airbag in the dashboard above the glove box, seat belt tensioners in the front seat belt retractors, driver's seat belt buckle tensioner in the driver's seat belt lower anchor, front passenger's seat belt buckle tensioners in the front passenger's seat belt lower anchor, side curtain airbags in the sides of the roof, and side airbags in the front seat-backs. Information necessary to safely service the SRS is included in this Service Manual. Items marked with an asterisk ( * ) on the contents page include or are located near SRS components. Servicing, disassembling, or replacing these items require special precautions and tools, and should be done only by an authorized Acura dealer.

- To avoid rendering the SRS inoperative, which could lead to personal injury or death in the event of a severe frontal or side collision, all SRS service work must be performed by an authorized Acura dealer.
- Improper service procedures, including incorrect removal and installation of the SRS, could lead to personal injury caused by unintentional deployment of the airbags and/or side airbags.
- Do not bump or impact the SRS unit, front impact sensors, or side impact sensors when the ignition switch is ON (II), or for at least 3 minutes after the ignition switch is turned OFF; otherwise, the system may fail in a collision, or the airbags may deploy.
- SRS electrical connectors are identified by yellow color coding. Related components are located in the steering column, front console, dashboard, dashboard lower panel, in the dashboard above the glove box, in the front seats, in the roof side, and around the floor. Do not use electrical test equipment on these circuits.

BACK

Protected by AR

# Steering

## Power Steering


Special Tools ..... 17-2
Component Location Index ..... 17-3
Symptom Troubleshooting Index ..... 17-4
Symptom Troubleshooting ..... 17-6
Steering Wheel Rotational Play Check ..... 17-7
Power Assist Check ..... 17-7
Steering Linkage and Gearbox Inspection ..... 17-8
Pump Pressure Test with T/N 07406-0010001 ..... 17-9
Pump Pressure Test with T/N 07406-001000A or T/N 07406-001A101 ..... 17-10
Fluid Leakage Inspection ..... 17-11
Fluid Replacement ..... 17-12
Power Steering Hose, Line, and Pressure Switch Replacement ..... 17-13
Pump Replacement ..... 17-14
Pump Overhaul ..... 17-15
* Steering Wheel Removal ..... 17-22
Steering Wheel Disassembly/Reassembly ..... 17-23
* Steering Wheel Installation ..... 17-24
* Steering Column Removal and Installation ..... 17-25
Steering Column/Tilt Telescopic Inspection ..... 17-28
Steering Lock Replacement ..... 17-28
Rack Guide Adjustment ..... 17-29
Steering Gearbox Removal ..... 17-30
Steering Gearbox Overhaul ..... 17-35
Steering Gearbox Installation ..... 17-51
Tie-rod Ball Joint Boot Replacement ..... 17-56
Gearbox Mount Cushion Replacement ..... 17-57

Protected by AR

# Power Steering

## Special Tools

| Ref. No. | Tool Number | Description | Qty |
|---|---|---|---|
| ① | 07HAG-SF1020A or 07HAG-SF10200 | Piston Seal Ring Sizing Tool | 1 |
| ② | 07JAF-SH20330 | Bushing Base | 1 |
| ③ | 07LAG-SM40100 | Piston Seal Ring Guide | 1 |
| ④ | 07LAG-SM40300 | Cylinder End Seal Slider | 1 |
| ⑤ | 07MAA-SL00100 | Locknut Wrench, 40 mm | 1 |
| ⑥ | 07MAC-SL0A202 | Ball Joint Remover, 28 mm | 1 |
| ⑦ | 07NAG-SR3090A | Valve Seal Ring Sizing Tool | 1 |
| ⑧ | 07TAF-SZ50100 | Cylinder End Seal Remover Attachment | 1 |
| ⑨ | 07YAG-S2X0100 | Sleeve Seal Ring Guide | 1 |
| ⑩ | 07ZAB-S5A0100 | Pulley Holder | 1 |
| ⑪ | 07ZAG-S5A0100 | Sleeve Seal Ring Sizing Tool, 36 mm | 1 |
| ⑫ | 07ZAK-S7CA100 | P/S joint Adapter (Pump) | 1 |
| ⑬ | 07ZAK-S7CA200 | P/S joint Adapter (Hose) | 1 |
| ⑭ | 07406-0010001 or 07406-001000A or 07406-001A101 | P/S Pressure Gauge | 1 |
| ⑮ | 07749-0010000 | Driver | 1 |
| ⑯ | 07946-1870100 | Attachment, 28 x 30 mm | 1 |

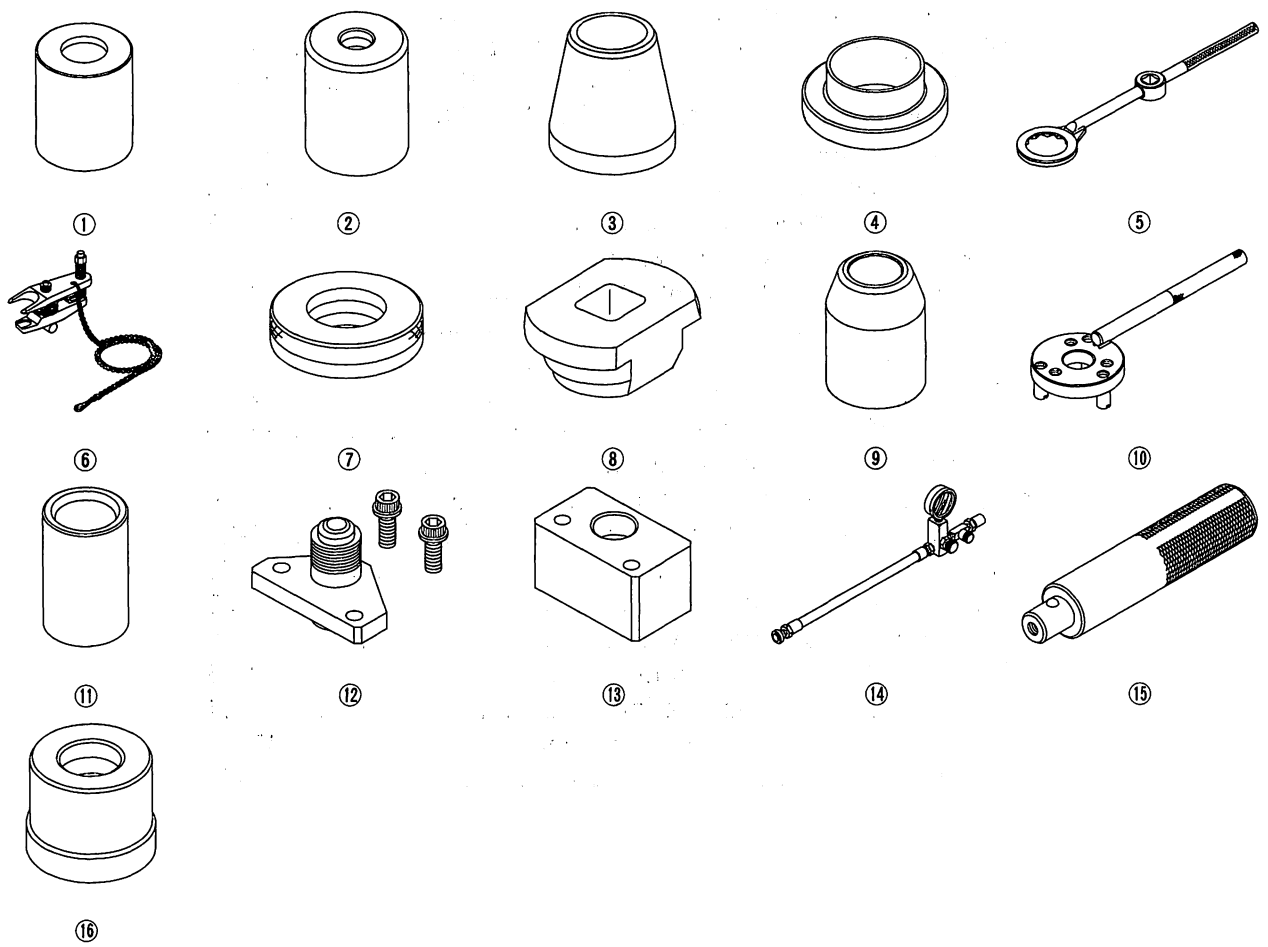




BACK

Protected by AR

## Component Location Index

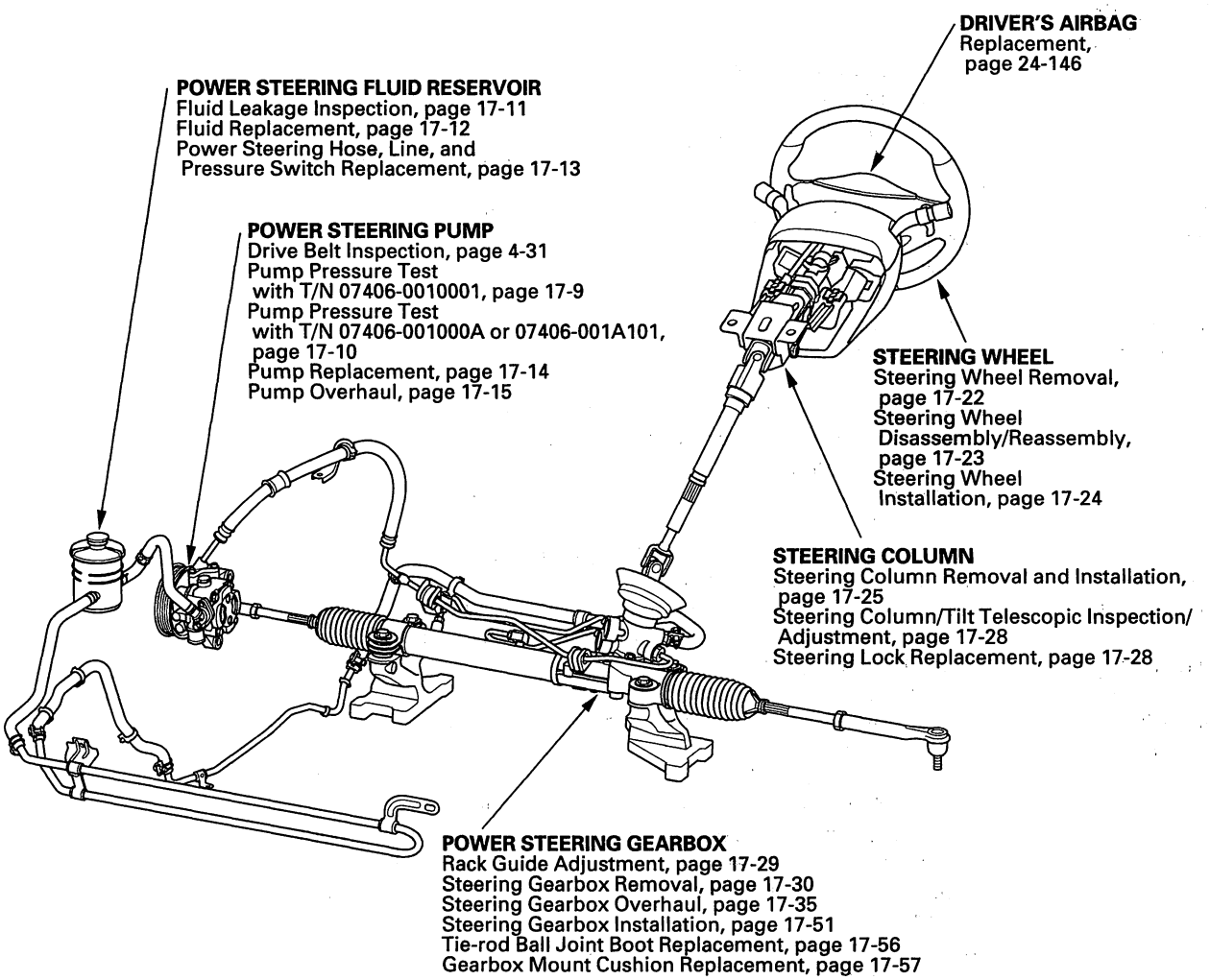

Protected by AR



## Symptom Troubleshooting Index

Find the symptom in the chart below, and do the related procedures in the order listed until you find the cause.

| Symptom | Procedure(s) | Also check for |
|---|---|---|
| Hard steering | Troubleshoot the system (see page 17-6). | • Modified suspension<br>• Damaged suspension<br>• Tire sizes, tire varieties, and air pressure |
| Assist (excessively light steering at high speed) | Check the rack guide adjustment (see page 17-29). | Front wheel alignment (see page 18-5) |
| Shock or vibration when the steering wheel is turned to full lock | 1. Check the rack guide adjustment (see page 17-29).<br>2. Check the drive belt for slippage (see page 4-31).<br>3. Check the power steering pump fluid pressure with T/N 07406-0010001 (see page 17-9) or T/N 07406-001000A or T/N 07406-001A101 (see page 17-10).<br>4. Overhaul the steering gearbox (see page 17-35). | |
| Steering wheel will not return smoothly | 1. Check cylinder lines for deformation.<br>2. Check the ball joints for binding.<br>3. Check wheel alignment (see page 18-5).<br>4. Overhaul the steering gearbox (see step 2 on page 17-36). | |
| Uneven or rough steering | 1. Check the rack guide adjustment (see page 17-29).<br>2. Check the drive belt (see page 4-31).<br>3. Check for low or erratic engine idle speed (see page 11-338).<br>4. Check for air in the power steering system due to air entering inlet side of pump.<br>5. Check for low fluid level in the power steering reservoir due to possible leaks in system (see page 17-12).<br>6. Overhaul the steering gearbox (see step 2 on page 17-36). | |
| Steering wheel kicks back during wide turns | 1. Check the drive belt (see page 4-31).<br>2. Check the power steering pump fluid pressure with T/N 07406-0010001 (see page 17-9) or T/N 07406-001000A or T/N 07406-001A101 (see page 17-10). | |
| Humming noise from the power steering system | 1. Check when the noise occurs:<br>• If the noise is heard 2—3 minutes after starting the engine in cold weather, this is normal.<br>• If the noise is heard when the wheel is turned with the vehicle stopped, this is normal due to the fluid pulsation.<br>2. Check for the high-pressure hose touching the subframe or body.<br>3. Check for automatic transmission converter noise (A/T).<br>4. Check for air bubbles in the power steering fluid, leak on inlet side of pump.<br>5. Check for particle contamination of fluid and restricted filter in the reservoir. | Pump pressure |
| Power steering rack rattle or chattering | 1. Check for loose steering components (tie-rod and ball joints). Tighten or replace as necessary.<br>2. Check the steering column shaft for wobbling. If the steering column wobbles, replace the steering column assembly (see page 17-25).<br>3. Check the rack guide adjustment (see page 17-29).<br>4. Check the power steering pump pulley:<br>• If the pulley is loose, tighten it (see step 46 on page 17-21).<br>• If the pump shaft is loose, replace the pump (see page 17-14). | |



BACK

Protected by AR

| Symptom | Procedure(s) | Also check for |
|---|---|---|
| Hissing from the power steering system/foaming fluid | • Check the fluid level. If low, fill the reservoir to the proper level and check for leaks (see page 17-11).<br>• Check the reservoir for leaks.<br>• Check for crushed inlet hose or loose hose clamp allowing air into the suction side of the system (see page 17-11).<br>• Check the power steering pump shaft oil seal for leaks. | Air in the P/S fluid |
| Noise from the power steering pump | • Compare the pump noise at normal operating temperature to another like vehicle (pump noise for 2—3 minutes after starting the engine in cold weather is normal).<br>• Remove and inspect the pump for wear and damage (see page 17-14). | • P/S pump pressure<br>• Air in the P/S fluid |
| Squeaking from the power steering pump | Check the drive belt (see page 4-31). | |
| Fluid leaks from the steering gearbox | • Fluid leaks from the top of the valve body unit. Overhaul the valve body unit (see step 19 on page 17-39).<br>• Fluid leaks from the driver's side boot. Replace the valve oil seal on the pinion shaft. Replace the cylinder end seal on the gearbox side.<br>• Fluid leaks from the passenger's side boot. Replace the cylinder end seal on the cylinder side.<br>• Fluid leaks from pinion shaft near the lower steering joint bolt. Overhaul the valve body unit (see step 19 on page 17-39).<br>• Fluid leaks from the steering damping valve covers on the valve body unit. Replace the valve housing. | |
| Fluid leaks from the power steering line | • Fluid leaks from the cylinder line connections (flare nuts). Tighten the connection and retest (see page 17-13).<br>• Fluid leaks from a damaged cylinder line. Replace the cylinder line (see page 17-13).<br>• Fluid leaks from the pump outlet hose or return line fitting on the valve body unit (flare nuts). Tighten the fitting and retest. If it still leaks, replace the hose, the line, or valve body unit as necessary. | |
| Fluid leaks from the power steering pump | • Fluid leaks from the front oil seal. Replace the front oil seal.<br>• Fluid leaks from the power steering pump housing. Replace the leaking O-rings or seals (see page 17-11), and if necessary replace the power steering pump (see page 17-14). | |
| Fluid leaks from the power steering reservoir | • Fluid leaks from around the reservoir cap because fluid level is too high. Drain the reservoir to the proper level. If the fluid is aerated check for an air leak on the inlet side of the pump.<br>• Fluid leaks from reservoir. Check for the reservoir for cracks and replace as necessary. | |
| Fluid leaks from the power steering pump outlet hose (high-pressure) | • Check the fitting for loose bolts. If the bolts are tight, replace the fitting O-ring.<br>• Fluid leaks at the swagged joint. Replace the pump outlet hose. | |
| Fluid leaks from the power steering pump inlet hose (low-pressure) | Check the hose for damage, deterioration, or improper assembly. Replace or repair as necessary. | |

Protected by AR



## Symptom Troubleshooting

### Hard Steering

1. Check the power assist (see page 17-7).

   *Is the initial turning load more than 29 N (3.0 kgf, 6.6 lbf) ?*

   **YES**—Go to step 2.
   **NO**—Power assist is OK.■

2. Connect the special tools and P/S pressure gauge T/N 07406-0010001 (see page 17-9), or T/N 07406-001000A or T/N 07406-001A101 (see page 17-10) to the pump.

3. Measure steady-state fluid pressure from the pump at idle.

   *Is the pressure 1,470 kPa (15 kgf/cm², 213 psi) or less?*

   **YES**—Go to step 4.
   **NO**—Go to step 8.

4. Measure the pump relief pressure at idle.

   *Is the pressure 8,150– 8,850 kPa (83– 90 kgf/cm², 1,180– 1,280 psi) or more?*

   **YES**—Go to step 5.
   **NO**—Go to step 9.

5. With a spring scale, measure the power assist in both directions, to the left and to the right.

   *Are the two measurements within 5.0 N (0.51 kgf, 1.12 lbf) of each other?*

   **YES**—Go to step 6.
   **NO**—Go to step 11.

6. Measure the fluid pressure with both pressure gauge valves open (if so equipped), while turning the steering wheel fully to the left and fully to the right.

   *Is the pressure 8,150– 8,850 kPa (83– 90 kgf/cm², 1,180– 1,280 psi) or more?*

   **YES**—Go to step 7.
   **NO**—Faulty gearbox.■

7. Adjust the rack guide (see page 17-29), and retest.

   *Is the steering OK?*

   **YES**—Repair is completed.■
   **NO**—Faulty gearbox.■

8. Check the outlet and return hoses and lines between the pump and the gearbox for clogging and deformation.

   *Are the lines clogged or deformed?*

   **YES**—Repair or replace the lines.■
   **NO**—Faulty valve body unit.■

9. Disassemble the pump (see page 17-15).

10. Check the pressure control valve for smooth movement and leaks (see step 16 on page 17-17).

    *Is the pressure control valve OK?*

    **YES**—Faulty pump assembly.■
    **NO**—Faulty pressure control valve.■

11. Check the cylinder lines for deformation (see page 17-13).

    *Are any of the lines deformed?*

    **YES**—Replace the deformed line.■
    **NO**—Go to step 12.

12. Check for a bent rack shaft or misadjusted rack guide (too tight).

    *Is the rack shaft bent or the rack guide adjusted too tight?*

    **YES**—Replace the rack shaft, or readjust the rack guide.■
    **NO**—Faulty valve body unit.■



BACK

Protected by AR

## Steering Wheel Rotational Play Check

1. Turn the front wheels to the straight ahead position.

2. Measure how far you can turn the steering wheel left and right without moving the front wheels.

   - If the play is within the limit, the gearbox and linkages are OK.
   - If the play exceeds the limit, adjust the rack guide (see page 17-29). If the play is still excessive after rack guide adjustment, inspect the steering linkage and gearbox (see page 17-8).

**Rotational play: 0—10 mm (0—0.39 in.)**

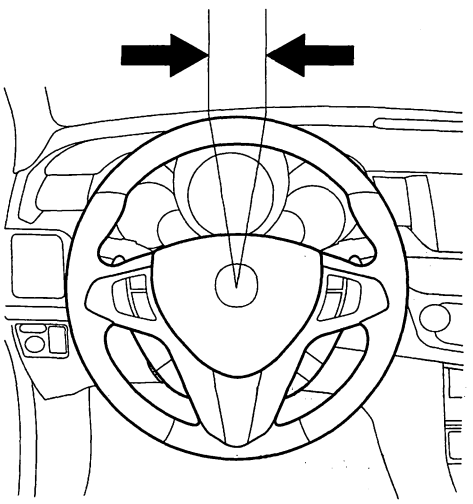

## Power Assist Check

NOTE: This test should be done with original equipment tires and wheels at the correct tire pressure.

1. Check the power steering fluid level (see page 17-12).

2. Start the engine, let it idle, and turn the steering wheel from lock-to-lock several times to warm up the fluid.

3. Attach a commercially available spring scale to the steering wheel. With the engine idling and the vehicle on a clean, dry floor, pull the scale as shown and read it as soon as the tires begin to turn.

   - If the scale reads no more than the specification, the gearbox and pump are OK.
   - If the scale reads more than the specification, troubleshoot the steering system (see page 17-6).

**Initial turning load: 29 N (3.0 kgf, 6.6 lbf)**

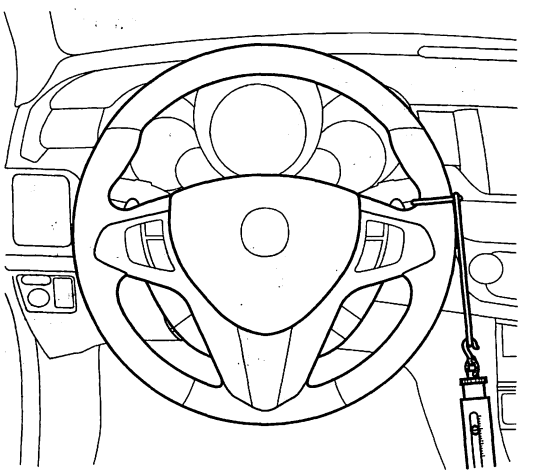

Protected by AR



## Steering Linkage and Gearbox Inspection

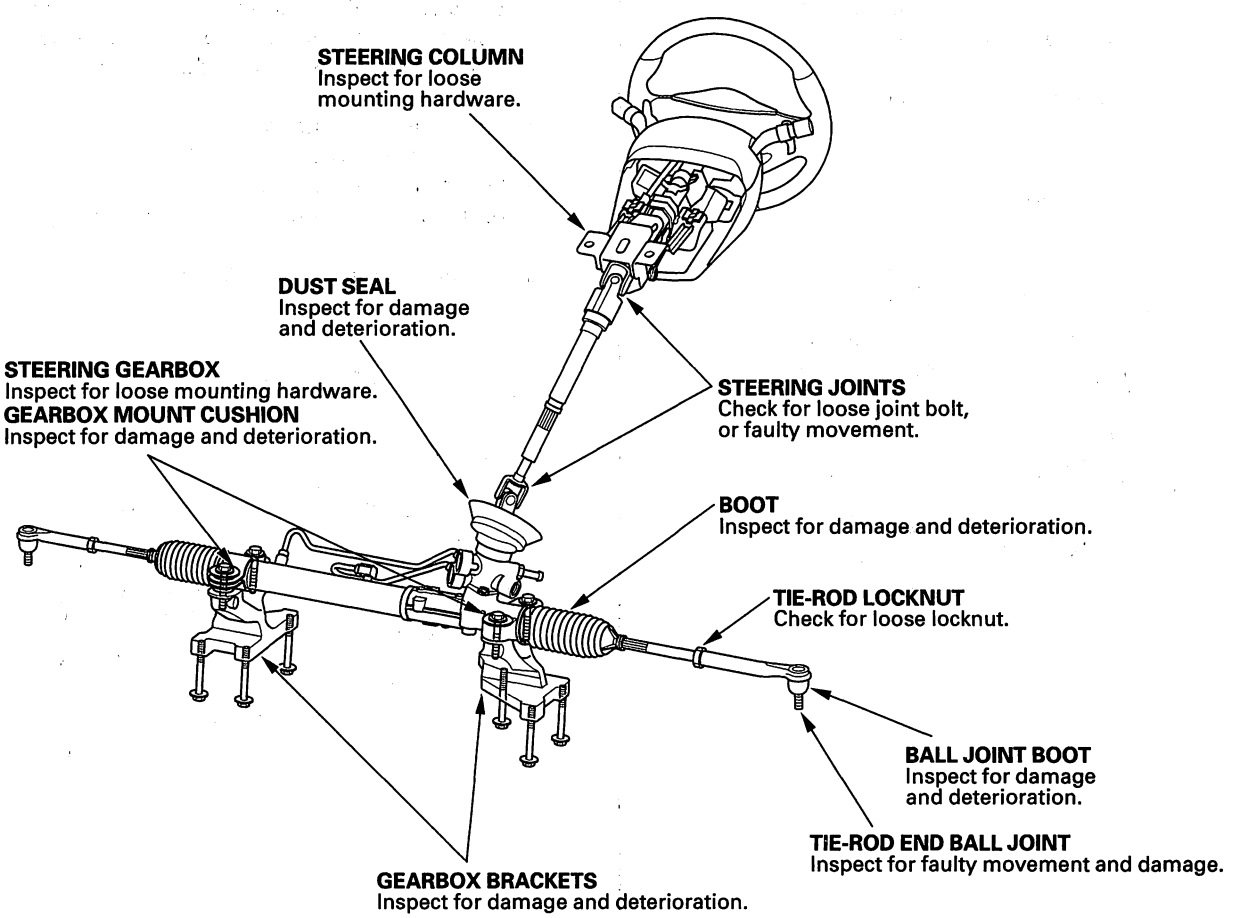




BACK

Protected by AR

## Pump Pressure Test with T/N 07406-0010001

**Special Tools Required**
- P/S joint adapter (pump) 07ZAK-S7CA100
- P/S joint adapter (hose) 07ZAK-S7CA200
- P/S pressure gauge 07406-0010001

Check the fluid pressure as follows to determine whether the trouble is in the pump or gearbox.

1. Check the power steering fluid level (see page 17-12).

2. Disconnect the pump outlet hose (A) from the pump outlet with care so as not to spill the power steering fluid on the frame and other parts, then install the P/S joint adapter (pump) on the pump outlet (B) with the P/S joint outlet plate.

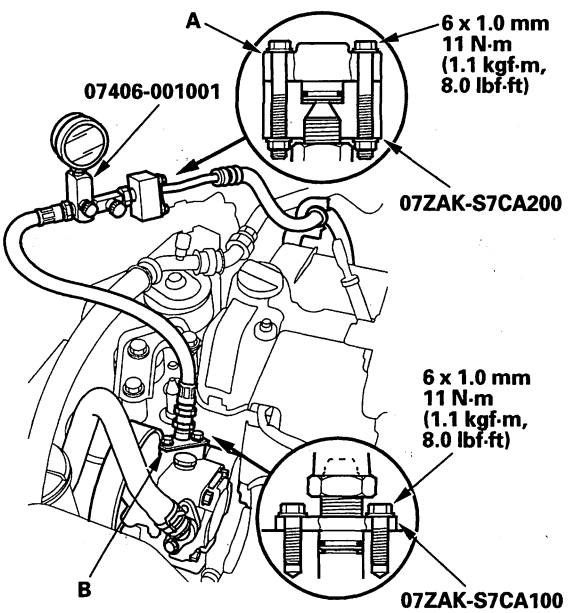


3. Connect the P/S joint adapter (hose) to the P/S pressure gauge, then connect the pump outlet hose to the P/S joint adapter (hose).

4. Install the P/S pressure gauge to the P/S joint adapter (pump).

5. Fully open the shut-off valve (A).

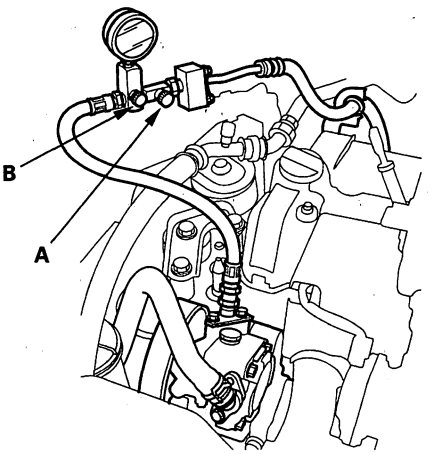


6. Fully open the pressure control valve (B).

7. Start the engine and let it idle.

8. Turn the steering wheel from lock-to-lock several times to warm the fluid to operating temperature at 158 °F (70 °C).

9. Measure steady-state fluid pressure while the engine is idling. If the pump is in good condition, the gauge should read no more than 1,470 kPa (15 kgf/cm², 213 psi).
   If it reads high, check for:

   - Clogged or deformed feed or return line between the pump and the gearbox.
   - Clogged valve body unit.

10. Close the shut-off valve, then close the pressure control valve gradually until the pressure gauge needle is stable. Read the pressure.

    **NOTICE**
    Do not keep the shut-off valve closed more than 5 seconds or the pump could be damaged by overheating.

11. Immediately open the shut-off valve fully.
    If the pump is in good condition, the gauge should read at least 8,150—8,850 kPa (83—90 kgf/cm², 1,180—1,280 psi). A low reading means pump output is too low for full assist. Repair or replace the pump.

Protected by AR



## Pump Pressure Test with T/N 07406-001000A or T/N 07406-001A101

**Special Tools Required**
- P/S joint adapter (pump) 07ZAK-S7CA100
- P/S joint adapter (hose) 07ZAK-S7CA200
- P/S pressure gauge 07406-001000A or 07406-001A101

Check the fluid pressure as follows to determine whether the trouble is in the pump or gearbox.

1. Check the power steering fluid level (see page 17-12).

2. Disconnect the pump outlet hose (A) from the pump outlet with care so as not to spill the power steering fluid on the frame and other parts, then install the P/S joint adapter (pump) on the pump outlet (B) with the P/S joint outlet plate.

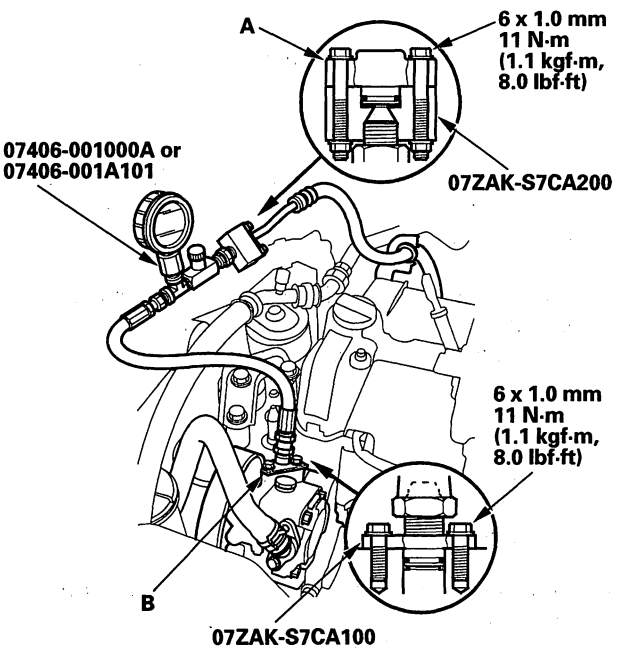


3. Connect the P/S joint adapter (hose) to the P/S pressure gauge, then connect the pump outlet hose to the P/S joint adapter (hose).

4. Install the P/S pressure gauge to the P/S joint adapter (pump).

5. Open the shut-off valve (A) fully.

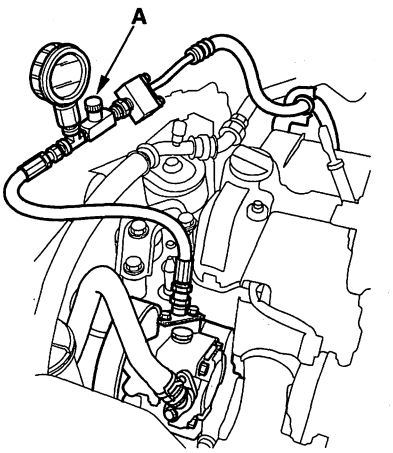


6. Start the engine and let it idle.

7. Turn the steering wheel from lock-to-lock several times to warm the fluid to operating temperature at 158 °F (70 °C).

8. Measure steady-state fluid pressure while the engine is idling. If the pump is in good condition, the gauge should read no more than 1,470 kPa (15 kgf/cm², 213 psi).
   If it reads high, check for:

   - Clogged or deformed feed or return line between the pump and the gearbox.
   - Clogged valve body unit.

9. Close the shut-off valve gradually and read the pressure.

   **NOTICE**
   Do not keep the shut-off valve closed more than 5 seconds or the pump could be damaged by overheating.

10. Immediately open the shut-off valve fully.
    If the pump is in good condition, the gauge should read at least 8,150—8,850 kPa (83—90 kgf/cm², 1,180—1,280 psi). A low reading means pump output is too low for full assist. Repair or replace the pump.



BACK

Protected by AR

## Fluid Leakage Inspection

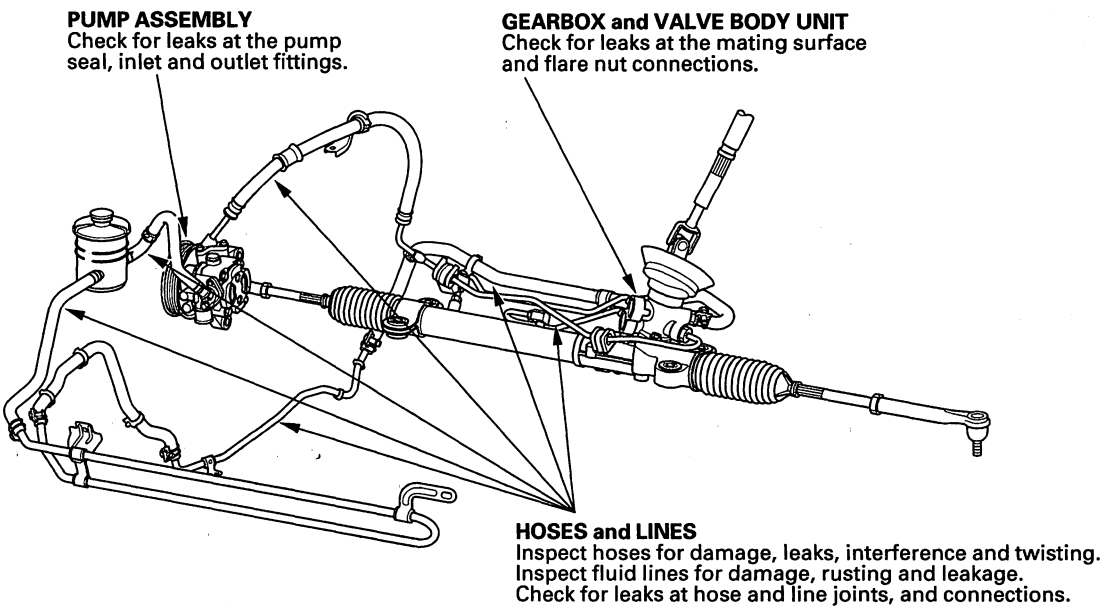

Protected by AR



## Fluid Replacement

Check the reservoir (A) at regular intervals, and add the recommended fluid as necessary. Always use Acura Power Steering Fluid. Using any other type of power steering fluid or automatic transmission fluid can cause increased wear and poor steering in cold weather.

NOTE: If the fluid is contaminated, the screen in the reservoir may be partially blocked. Replace the reservoir if necessary.

**System capacity:**
**0.9 L (0.96 US. qt) at disassembly**
**Reservoir capacity:**
**0.30 L (0.32 US. qt)**

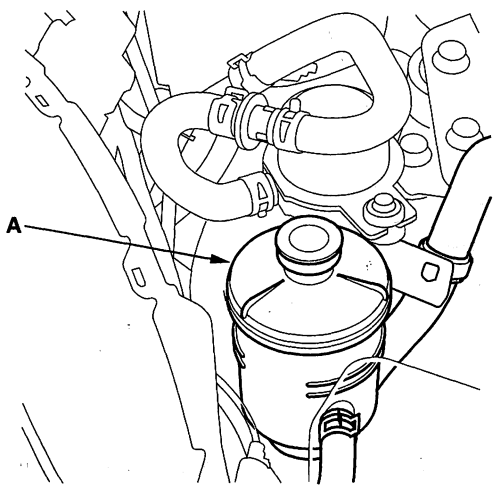


1. Remove the reservoir from its holder. Raise the reservoir, then disconnect the return hose (A) to drain the reservoir. Take care not to spill the fluid on the body and parts. Wipe off any spilled fluid at once.

   NOTE: Inspect the reservoir screen for any debris. If the reservoir screen is clogged, replace the reservoir.

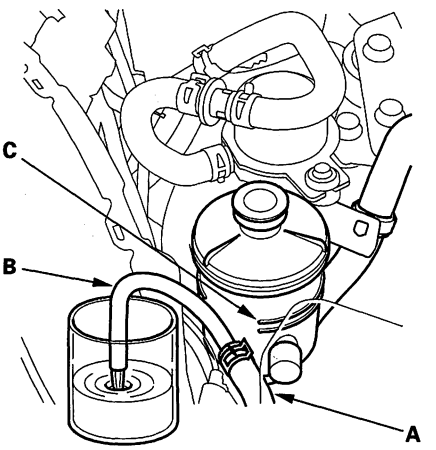


2. Connect a hose (B) of suitable diameter to the disconnected return hose, and put the hose end in a suitable container.

3. Start the engine, let it run at idle, and turn the steering wheel from lock-to-lock several times. When fluid stops running out of the hose, shut off the engine. Discard the fluid.

4. Reinstall the return hose on the reservoir.

5. Fill the reservoir to the upper level line (C).

6. Start the engine and run it at fast idle, then turn the steering from lock-to-lock several times to bleed air from the system.

7. Recheck the fluid level and add some if necessary. Do not fill the reservoir beyond the upper level line.

8. If the fluid is contaminated, dark, or discolored, repeat the procedure as necessary.



BACK

Protected by AR

## Power Steering Hose, Line, and Pressure Switch Replacement

Note these items during installation:

- Connect each hose to the corresponding line securely until it contacts the stop on the line. Install the clamp or adjustable clamp at the specified distance from the hose end as shown.
- Check all clamps for deterioration or deformation; replace the clamps with new ones if necessary.
- Add the recommended power steering fluid to the specified level on the reservoir and check for leaks.

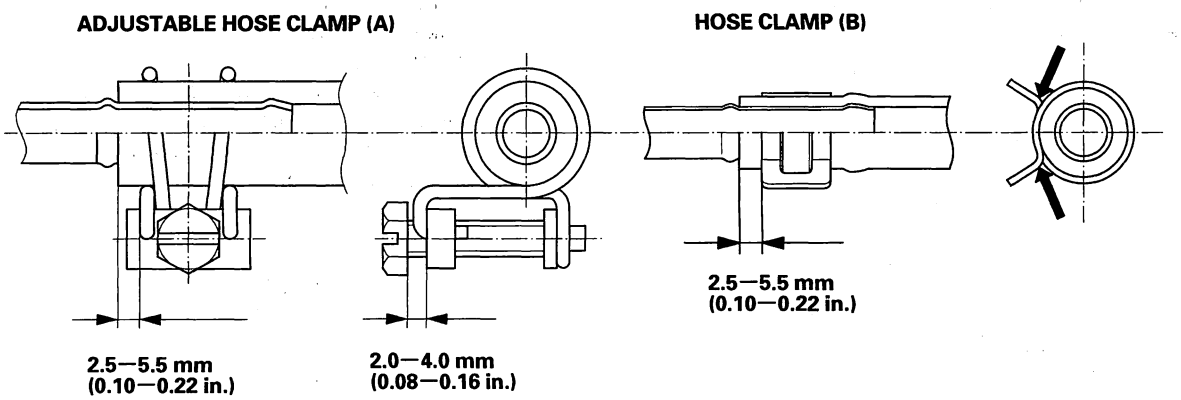


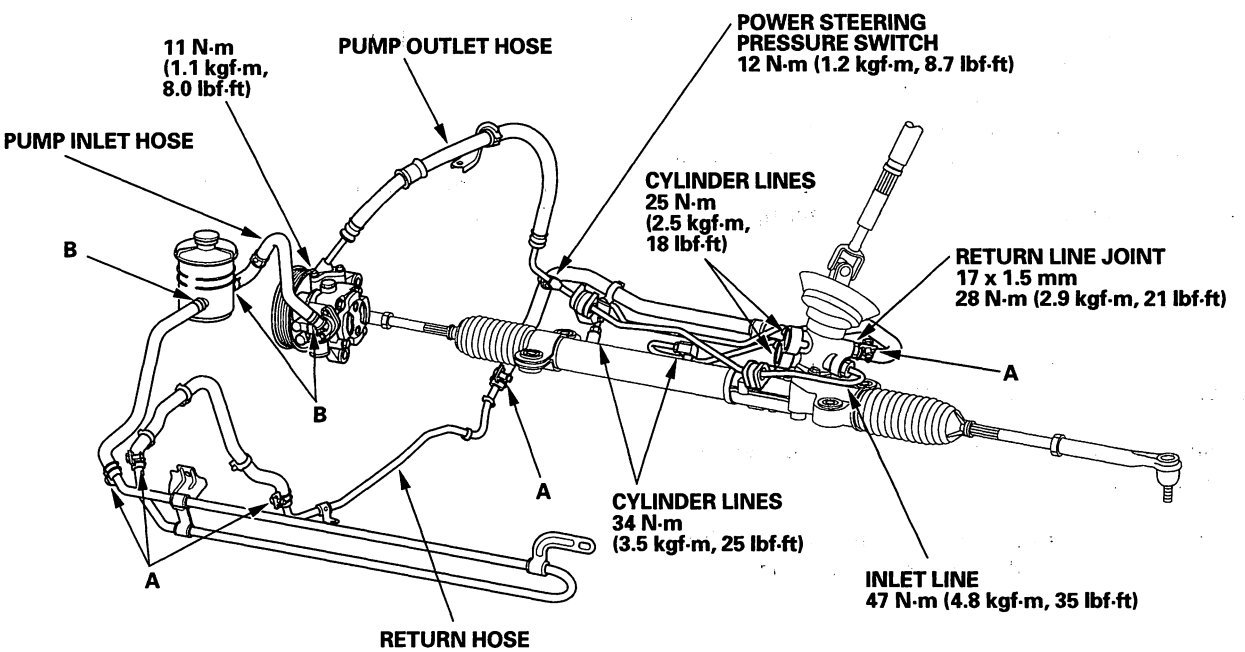

Protected by AR



## Pump Replacement

1. Place a suitable container under the vehicle.

2. Drain the power steering fluid from the reservoir (see page 17-12).

3. Remove the drive belt (A) from the pump pulley (see page 4-31).

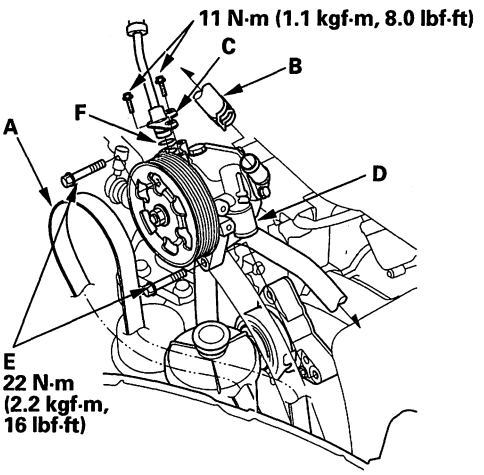


4. Cover the auto-tensioner, alternator, and A/C compressor with several shop towels to protect them from spilled power steering fluid. Disconnect the pump inlet hose (B) and pump outlet hose (C) from the pump (D), and plug them. Take care not to spill the fluid on the body or parts. Wipe off any spilled fluid at once. Do not turn the steering wheel with the pump removed.

5. Remove the pump mounting bolts (E).

6. Cover the opening of the pump with a piece of tape to prevent foreign material from entering the pump.

7. Connect the pump inlet hose and pump outlet hose onto the new pump with new O-ring (F).

8. Loosely install the pump in the pump bracket with the mounting bolts, then tighten the pump fittings securely.

9. Tighten the pump mounting bolts to the specified torque.

10. Install the drive belt (A).

    Note these items during belt installation:
    - Make sure that the belt is properly positioned on the pulleys (B).
    - Do not get power steering fluid or grease on any parts around the power steering pump, drive belt, or pulley faces. Clean off any fluid or grease before installation.

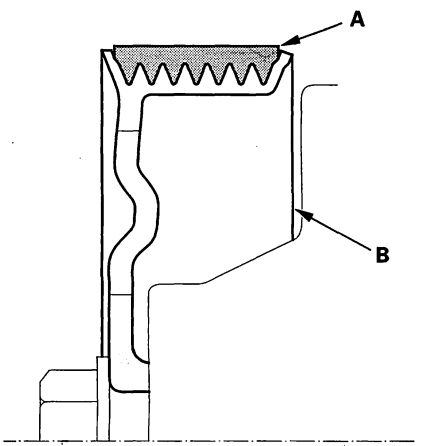


11. Fill the reservoir to the upper level line (see page 17-12).



BACK

Protected by AR

# Pump Overhaul

## Exploded View

Replace the pump as an assembly if the parts indicated with asterisk (*) are worn or damaged.

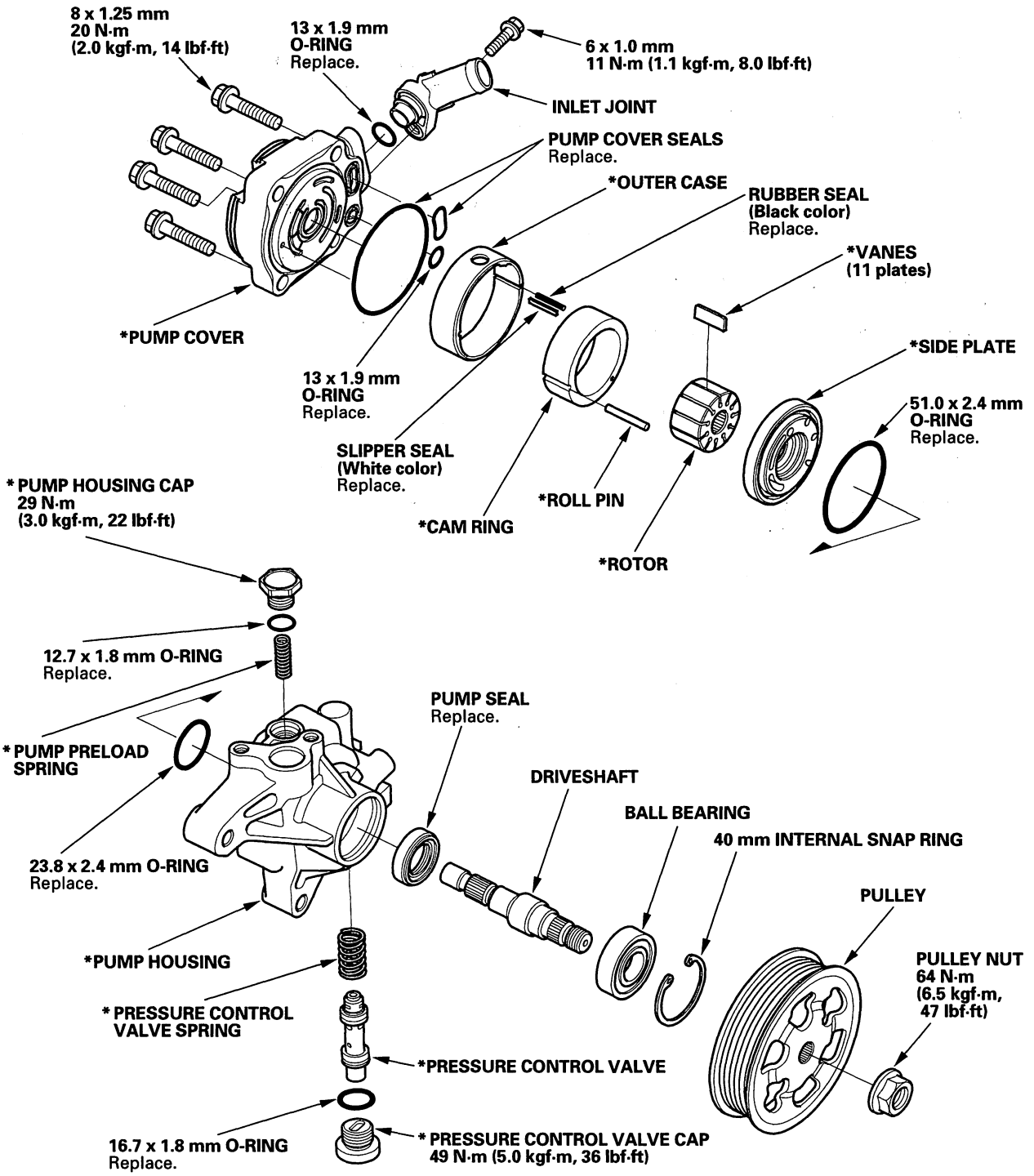


(cont'd)

Protected by AR



## Pump Overhaul (cont'd)

**Special Tools Required**
- Attachment, 28 x 30 mm 07946-1870100
- Driver 07749-0010000
- Pulley holder 07ZAB-S5A0100

**Disassembly**

NOTE: Refer to the Exploded View as needed during the following procedure.

1. Drain the fluid from the pump (see page 17-12).
2. Remove the power steering pump (see page 17-14).
3. Hold the steering pump (A) in a vise with soft jaws (B), hold the pulley (C) with the pulley holder (D), and remove the pulley nut (E) and pulley. Be careful not to damage the pump housing with the jaws of the vise.

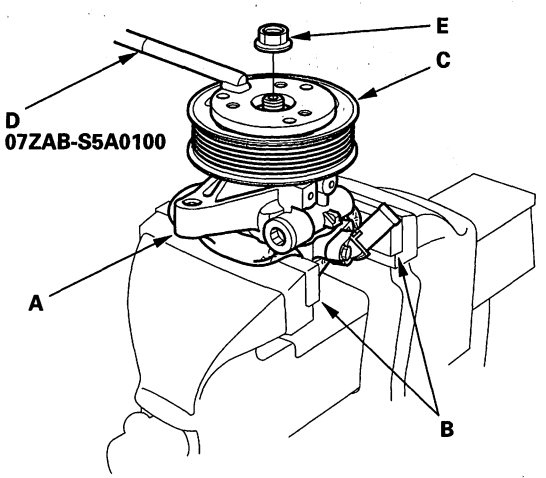


4. Remove the inlet joint and O-ring.
5. Remove the pressure control valve cap, O-ring, valve spring, and pressure control valve.
6. Remove the pump housing cap, O-ring, and pump preload spring.
7. Remove the pump cover, O-ring, and pump cover seals.
8. Pull out the roll pin.
9. Remove the outer case, cam ring, rotor, vanes, and side plate.
10. Remove the rubber seal and slipper seal from the outer case.
11. Remove the O-rings from the bottom of the housing.
12. Remove the 40 mm internal snap ring, then remove the driveshaft by tapping the shaft end with a plastic hammer.
13. Remove the seal from the pump housing.



BACK

Protected by AR

**Inspection**

14. Check the pressure control valve for wear, burrs, and other damage to the edges of the grooves in the valve.

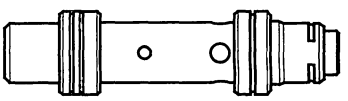

15. Inspect the bore of the pressure control valve on the pump housing for scratches and wear.

16. Slip the pressure control valve back in the pump housing, and check that it moves in and out smoothly. If OK, go to step 17; if not, replace the pump as an assembly. The pressure control valve is not available separately.

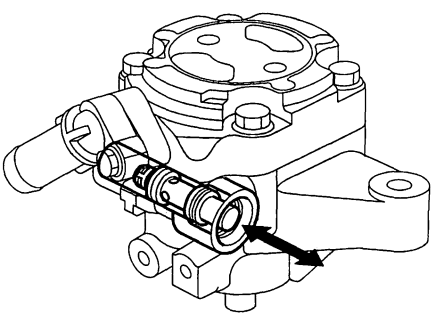

17. Attach a hose (A) to the end of the pressure control valve (B) as shown. Then submerge the pressure control valve in a container of power steering fluid or solvent (C), and blow in the hose.

    - If air bubbles leak through the valve at less than 98 kPa (1.0 kgf/cm$^2$, 14.2 psi), replace the pump as an assembly. The pressure control valve is not available separately.
    - If the pressure control valve is OK, set it aside for reassembly later.

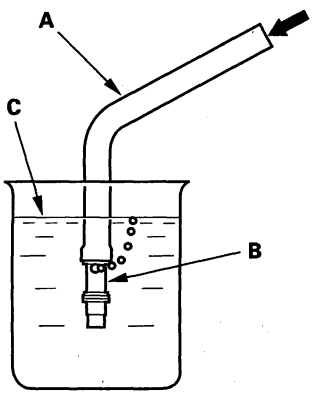


18. Inspect the ball bearing by rotating the outer race slowly. If you feel any play (axial or radial) or roughness, remove the faulty ball bearing (A), and install a new one (B).

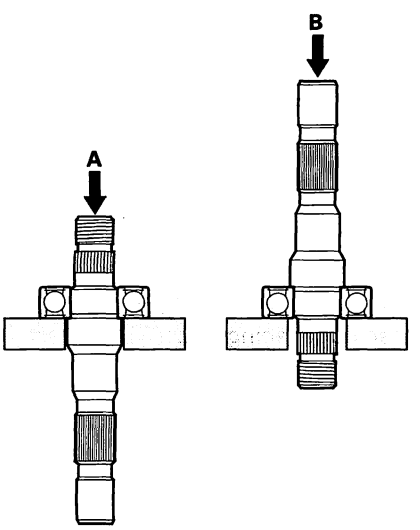


19. Inspect each part shown with an asterisk in the Exploded View; if any of them are worn or damaged, replace the pump as an assembly.

(cont'd)

Protected by AR



## Pump Overhaul (cont'd)

**Reassembly**

20. Install the new pump seal (A) (with its grooved side facing in) into the pump housing (B) by hand, then drive it in using the driver until the seal is fully seated in the pump housing. Do not apply more than 1,370 N (140 kgf, 308 lbf) of pressure.

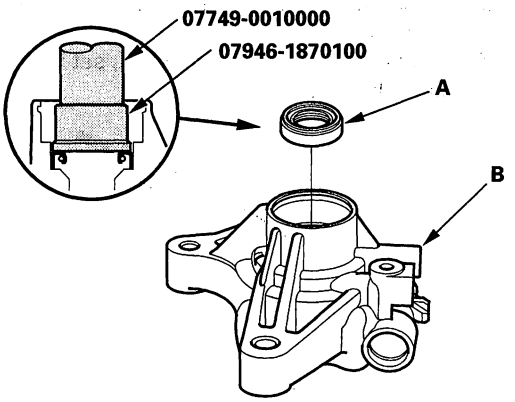


21. Position the pump driveshaft (A) in the pump housing, then press it in with the appropriate size socket wrench (B) as shown.

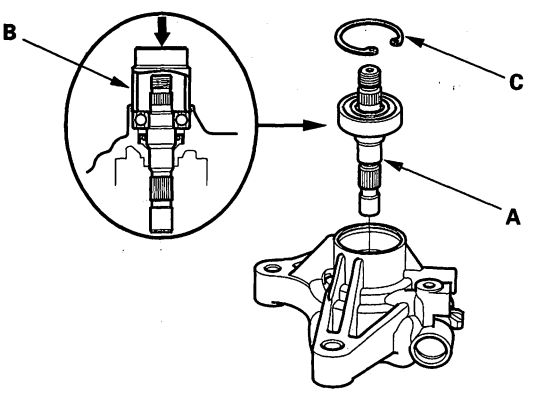


22. Install the 40 mm internal snap ring (C) with its radiused edge facing out.

23. Coat the new 23.8 mm O-ring (A) with power steering fluid, then position it on the bottom (B) of the pump housing.

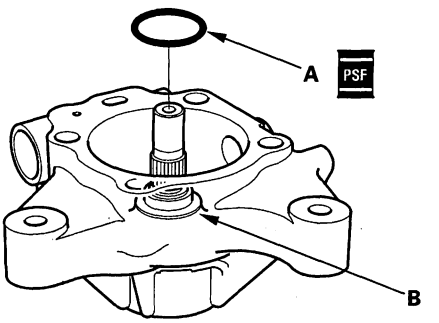


24. Coat the new cover seals (A) and new 13.0 mm O-ring (B) with power steering fluid, then position them into the grooves on the cover (C).

NOTE: Be careful not to install the inlet joint O-ring because they are same size.

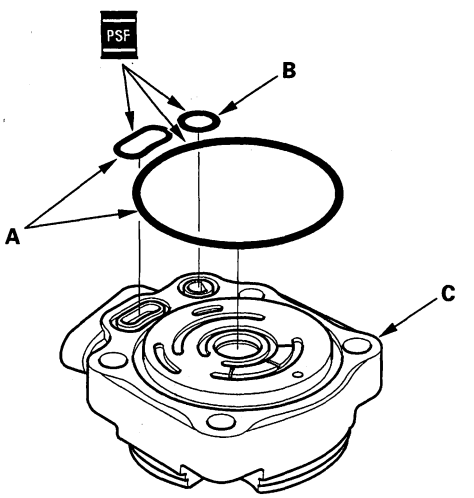




BACK

Protected by AR

25. Install the outer case (A) by aligning the slot (B) inside the outer case with the cover roll pin hole (C). Be sure that the tapered side (D) of outer case is facing up.

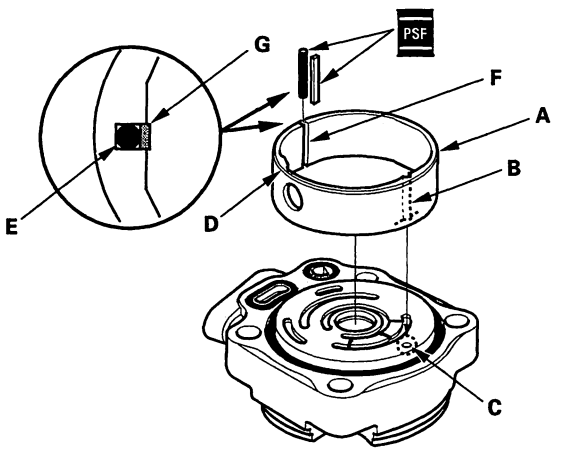


26. Apply power steering fluid to the rubber seal (E) (black), and install it in the slot (F) of the outer case.

27. Apply power steering fluid to the slipper seal (G) (white), and install it on top of the rubber seal you just installed.

28. Install the cam ring (A) by aligning the slot (B) with the slot (C) in the outer case.

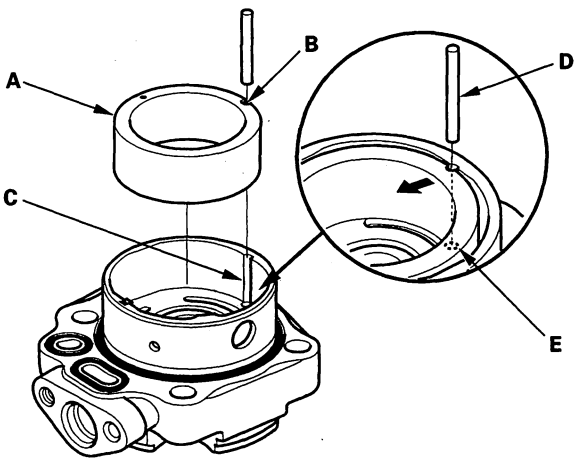


29. Insert the roll pin (D) into the slots between the cam ring and outer case, then push the roll pin into the set hole (E).

30. Install the rotor (A) in the cam ring (B).

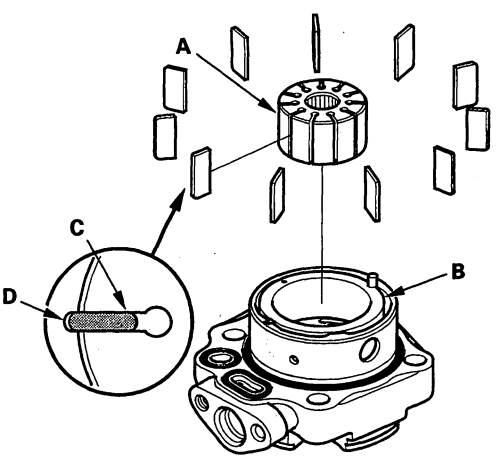


31. Set the 11 vanes (C) in the grooves in the rotor. Make sure that the gold color ends (D) of the vanes are in contact with the sliding surface of the cam ring.

(cont'd)

Protected by AR



## Pump Overhaul (cont'd)

32. Place the side plate (A) on the cam ring, and align the roll pin set hole (B) with the roll pin (C).

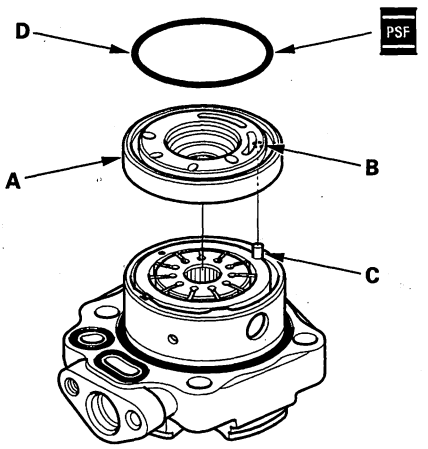


33. Coat the new O-ring (D) with power steering fluid, then position it into the groove on the side plate.

34. Install the pump housing (A) over the cover assembly (B).

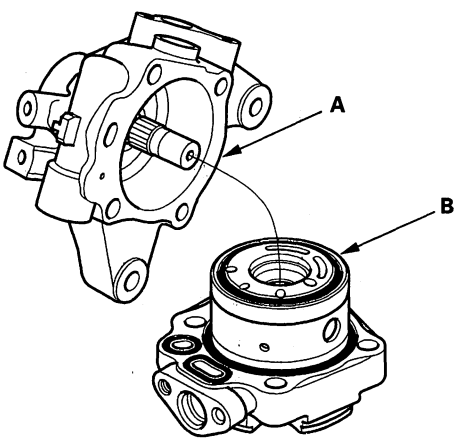


35. Align the bolt holes in the cover (A) with the threaded holes in the pump housing. Install the flange bolts loosely first, then torque the flange bolts in a criss-cross pattern in two or more steps.

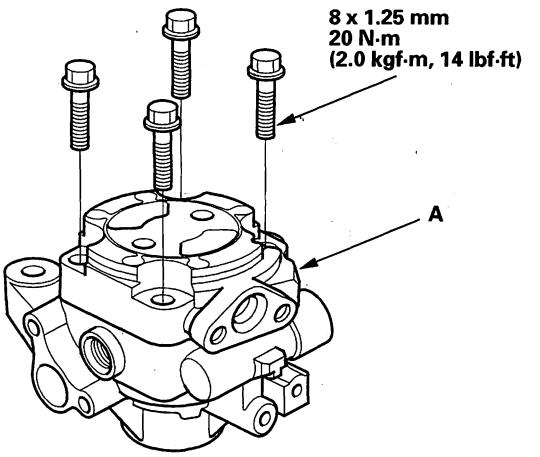


36. Push in the cam ring (A) from the pump housing cap hole (B) with a flat-tip screwdriver to make sure the cam ring is fully seated against the outer case.

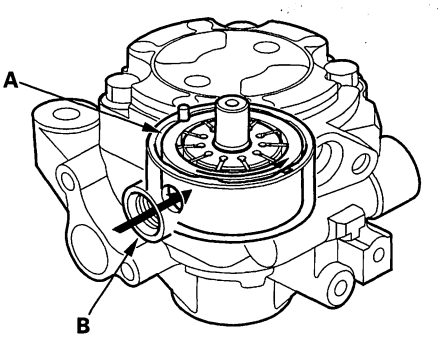




BACK

Protected by AR

37. Install the pump preload spring (A) in the pump housing.

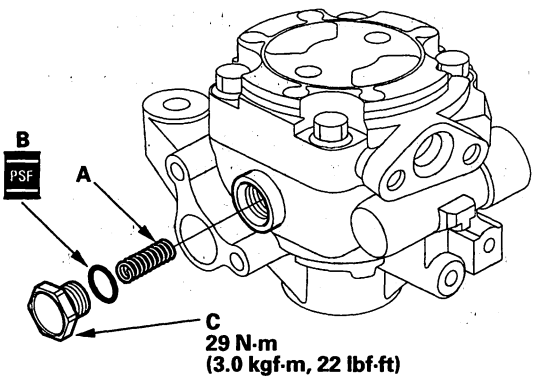


38. Coat the new 12.7 mm O-ring (B) with power steering fluid, and install it on the pump housing cap (C).

39. Install the pump housing cap on the pump housing, and tighten it to the specified torque.

40. Install the pressure control valve spring (A) in the pump housing.

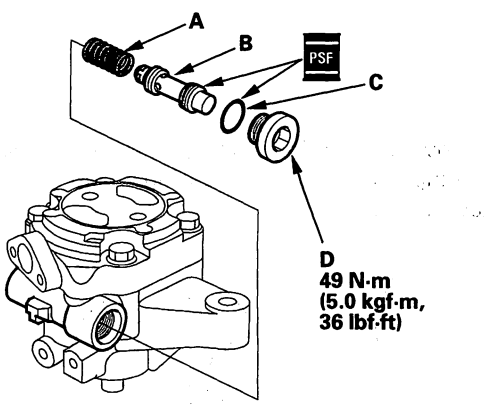


41. Coat the pressure control valve (B) with power steering fluid, and install it in the pump housing.

42. Coat the new 16.7 mm O-ring (C) with power steering fluid, and install it on the pressure control valve cap (D).

43. Install the pressure control valve cap on the pump housing, and tighten it to the specified torque.

44. Coat the new O-ring (A) with power steering fluid, and install it on the inlet joint (B).

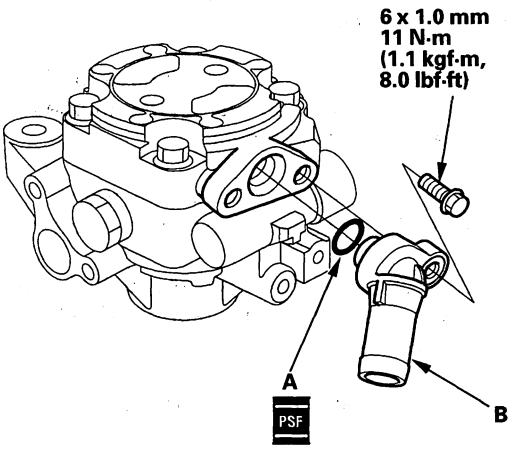


45. Install the inlet joint on the pump housing.

46. Install the pulley (A), then loosely install the pulley nut (B). Hold the steering pump in a vise with soft jaws (C). Be careful not to damage the pump housing with the jaws of the vise.

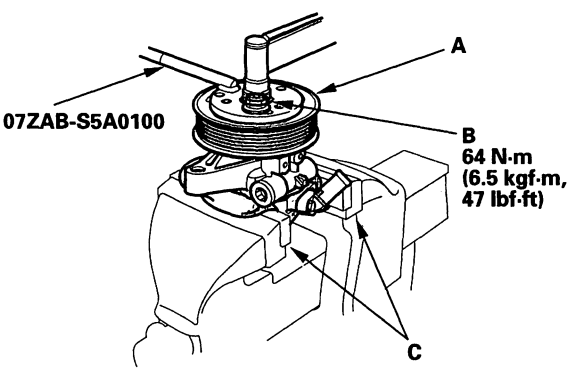


47. Hold the pulley with the pulley holder, and tighten the pulley nut to the specified torque.

48. Check that the pump turns smoothly by turning the pulley. If it turns hard, loosen the four flange bolts on the cover, then retighten them as in step 35, and check the pump again.

Protected by AR



## Steering Wheel Removal

SRS components are located in this area. Review the SRS component locations (see page 24-12) and the precautions and procedures (see page 24-14) before doing repairs or service.

1. Make sure you have the anti-theft code for the audio and the navigation system (if equipped), then write down the audio presets.

2. Make sure the ignition switch is OFF, then disconnect the negative cable from the battery.

3. Align the front wheels straight ahead, then remove the driver's airbag from the steering wheel (see page 24-146).

4. Disconnect the cable reel subharness connector (A).

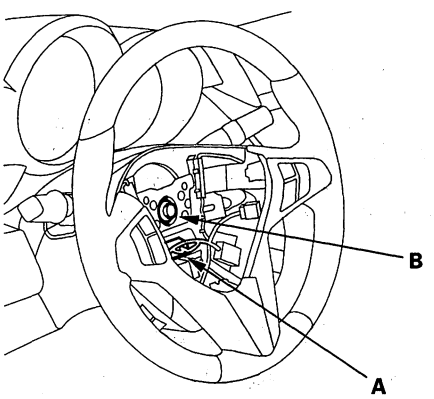


5. Loosen the steering wheel bolt (B).

6. Install a commercially available steering wheel puller (A) on the steering wheel (B). Free the steering wheel from the steering column shaft by turning the pressure bolt (C) of the puller.

   Note these items when removing the steering wheel:
   - Do not tap on the steering wheel or the steering column shaft when removing the steering wheel.
   - If you thread the puller bolts (D) into the wheel hub more than five threads, the bolts will hit the cable reel and damage it. To prevent this, install a pair of jam nuts five threads up on each puller bolt.

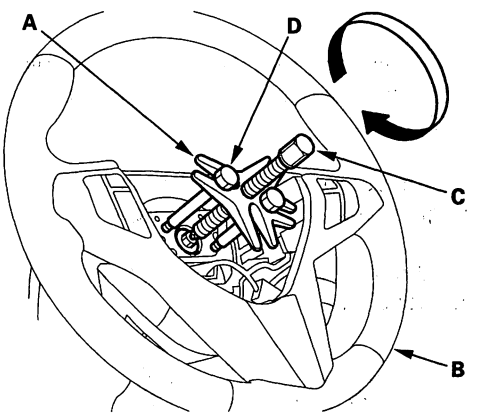


7. Remove the steering wheel puller, then remove the steering wheel bolt and steering wheel from the steering column.

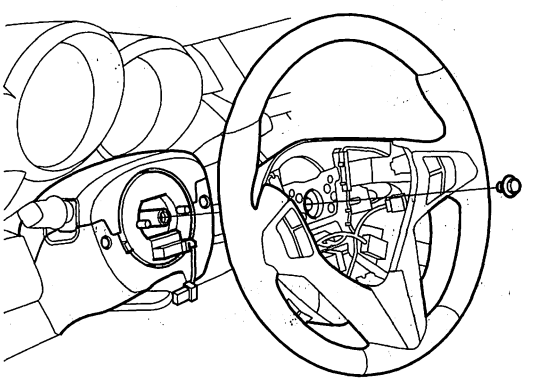



BACK

Protected by AR

## Steering Wheel Disassembly/Reassembly

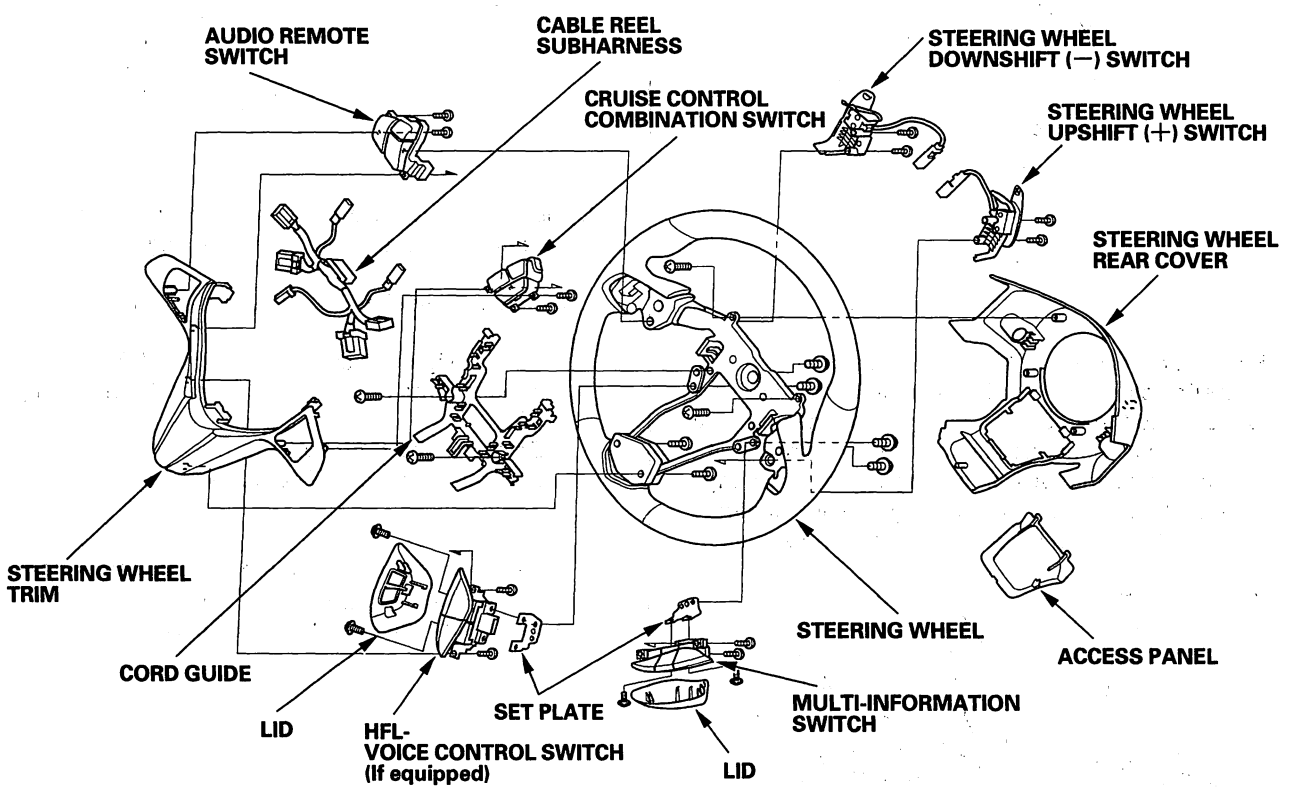

Protected by AR



## Steering Wheel Installation

1. Before installing the steering wheel, make sure the front wheels are aligned straight ahead, then center the cable reel (A). Do this by first rotating the cable reel clockwise until it stops. Then rotate it counterclockwise about three full turns. The arrow mark (B) on the cable reel label should point straight up.

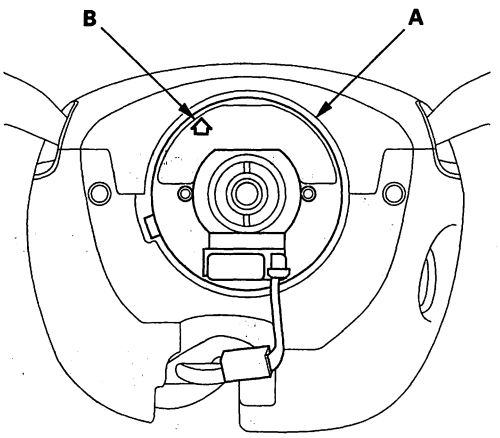


2. Position the two tabs (A) of the turn signal canceling sleeve (B) as shown. Install the steering wheel on to the steering column shaft, making sure the steering wheel hub (C) engages the pins (D) of the cable reel and tabs of the turn signal canceling sleeve. Do not tap on the steering wheel or steering column shaft when installing the steering wheel.

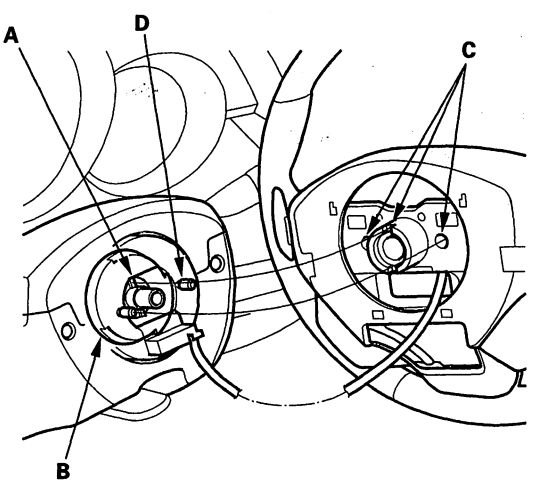


3. Install the steering wheel bolt (A), and tighten it to the specified torque. Connect the cable reel subharness connector (B). Make sure the wire harness is routed and fastened properly.

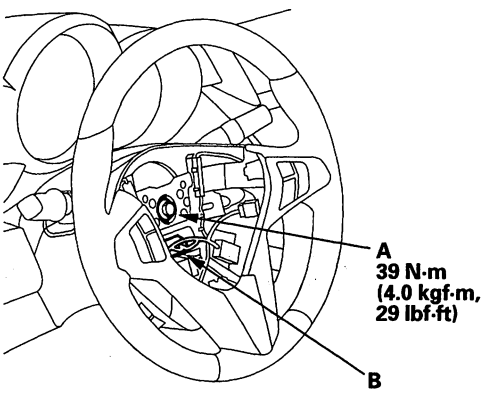


4. Install the driver's airbag, and confirm that the system is operating properly (see page 24-146).

5. Finish the installation, and note these items:

   - Turn the ignition switch ON (II); the SRS indicator should come on for about 6 seconds and then go off.
   - Enter the anti-theft code for the audio and the navigation system (if equipped), then enter the audio presets.
   - Set the clock.
   - Verify cruise control, audio remote, navigation guide and turn signal switch operation.
   - Make sure the steering wheel is centered.



BACK

Protected by AR

## Steering Column Removal and Installation

SRS components are located in this area. Review the SRS component locations (see page 24-12) and the precautions and procedures (see page 24-14) before doing repairs or service.

### Removal

**NOTICE**

Be careful not to pull the bracket (A) on the front side of steering column out of its normal position.
If the bracket accidentally comes out, replace the steering column as an assembly.

**Normal position**

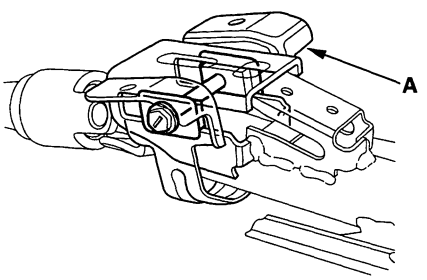


**Out of position**

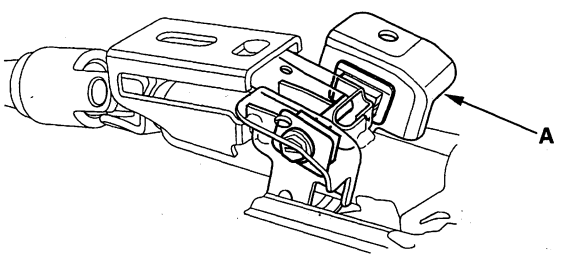


1. Make sure you have the anti-theft code for the audio and the navigation system (if equipped), then write down the audio presets.

2. Make sure the ignition switch is OFF, then disconnect the negative cable from the battery.

3. Remove the driver's airbag assembly and the steering wheel (see page 17-22).

4. Remove the driver's dashboard undercover (see page 20-102).

5. Remove the column covers (see page 20-107).

6. Remove the steering joint cover (A).

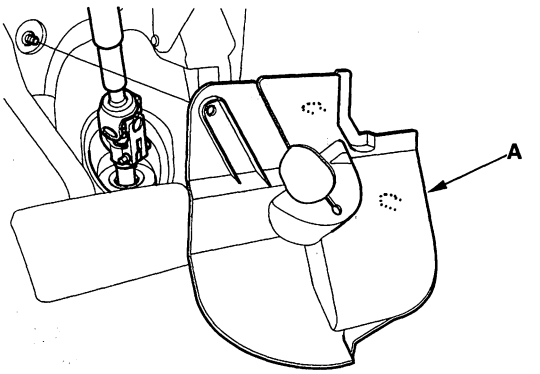


7. Release the tilt/telescopic lock lever, and adjust the steering column to the full tilt up position, and to the full telescopic in position.

8. Tighten the tilt/telescopic lock lever.

9. Hold the lower slide shaft (A) on the column with a piece of wire (B) between the joint yoke (C) of the lower slide shaft and joint yoke (D) of the upper shaft to prevent the slider shaft from pulling out.

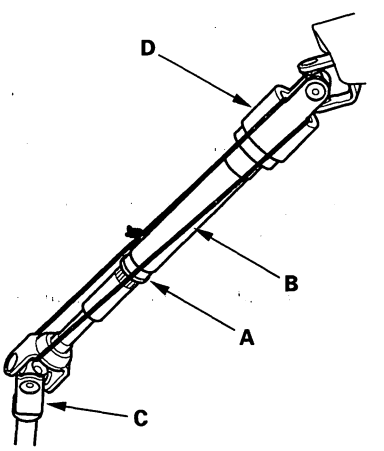


10. Release the tilt/telescopic lock lever, and adjust the steering column to the full telescopic out position, then tighten the tilt/telescopic lock lever.

    NOTE: Do not release the tilt/telescopic lock lever when removing the steering column from the frame.

(cont'd)

Protected by AR



## Steering Column Removal and Installation (cont'd)

11. Disconnect the wire harness connectors from the combination switch assembly and cable reel (A).

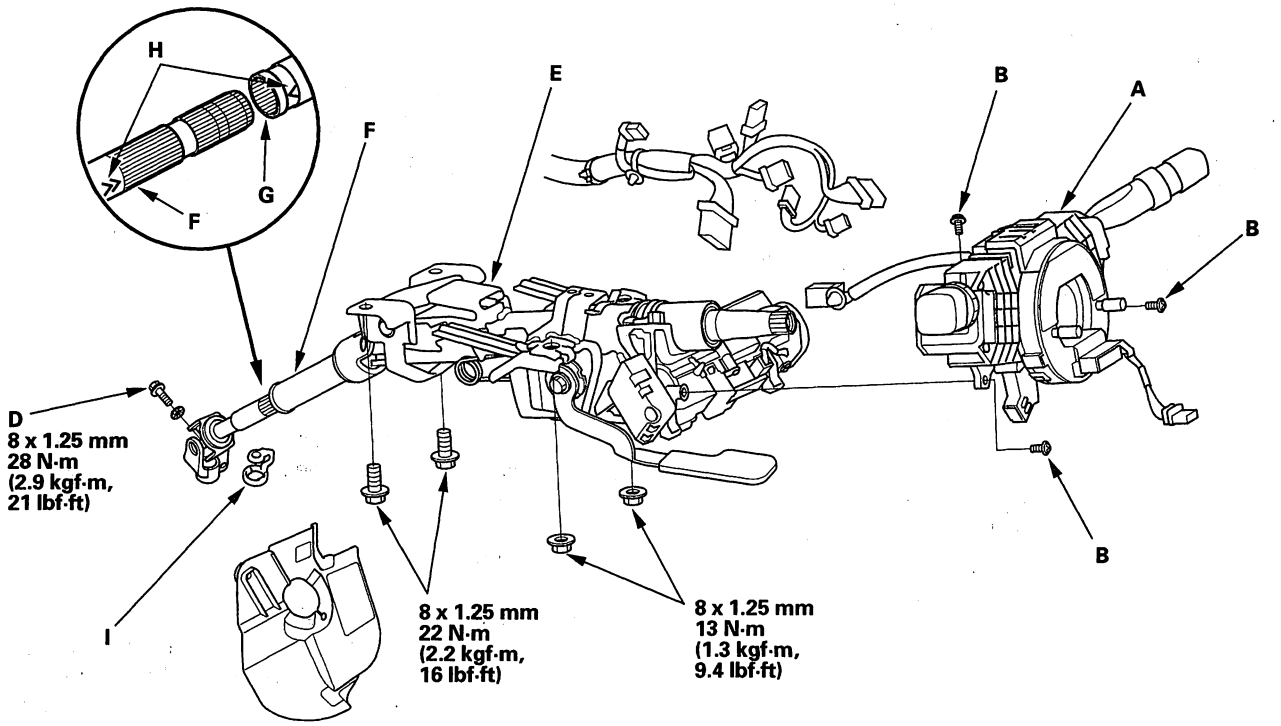


12. Remove the combination switch assembly from the steering column shaft by removing the three screws (B).

13. Disconnect the connectors from the ignition switch, and release the wire harness clips from the steering column.

14. Remove the steering joint bolt (C), then disconnect the steering joint (D) from the pinion shaft.

15. Remove the steering column (E) by removing the attaching nuts and bolts. If the lower slide shaft (F) is removed, slip it into the upper shaft (G) by aligning the paint or stamped marks (H).

16. Remove the center guide (I) (if equipped), and discard it. The center guide is for factory assembly only.



BACK

Protected by AR

## Installation

1. Install the steering column in the reverse order of removal, and note these items:

   - Make sure the wires are not caught or pinched by any parts.
   - Take care not to let the sliding capsules fall out of position during column installation.

2. Center the steering rack within its stroke in steering joint connection.

3. With the rack in the straight ahead driving position, cut the wire (A) and slip the lower end of the steering joint onto the pinion shaft (B) in the range shown.

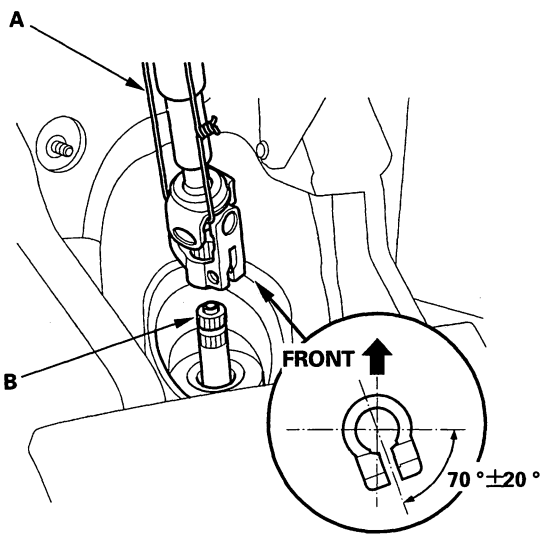


4. Align the bolt hole (A) on the steering joint with the groove (B) around the pinion shaft, and loosely install the joint bolt (C). Be sure that the joint bolt is securely in the groove in the pinion shaft. Pull on the steering joint to make sure that the steering joint is fully seated. Tighten the steering joint bolt to the specified torque.

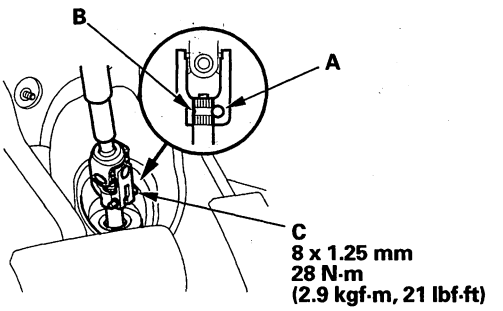


5. Install the steering joint cover (A).

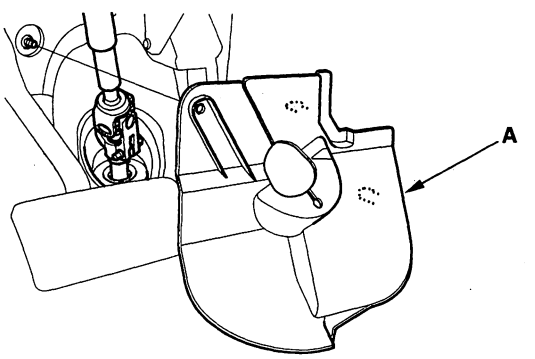


6. Install the steering wheel (see page 17-24).

7. Install the column covers (see page 20-107).

8. Install the driver's dashboard undercover (see page 20-102).

9. Connect the negative battery cable.

   - Turn the ignition switch ON (II); the SRS indicator should come on for about 6 seconds and then go off.
   - Enter the anti-theft code for the audio and the navigation system (if equipped), then enter the audio presets.
   - Set the clock.
   - Verify cruise control, audio remote, navigation guide, and turn signal switch operation.
   - Make sure the steering wheel is centered.

Protected by AR



## Steering Column/Tilt/Telescopic Inspection

- Check the steering column ball bearing (A) and the steering joint bearings (B) for play and proper movement. If any bearing is noisy or has excessive play, replace the steering column as an assembly.
- Check the lower side shaft (C) for smooth movement in and out. If the lower slide shaft is removed, slip it into the upper shaft by aligning the paint or stamped marks (D). If it sticks or binds, replace the steering column as an assembly.
- Check the sliding capsules (E) for distortion or breakage. If there is distortion or breakage, replace the steering column as an assembly.
- Check the tilt mechanism and telescopic mechanism for movement and damage.
- Check the absorbing plates (F) for distortion or breakage. If there is distortion or breakage, replace the steering column as an assembly.

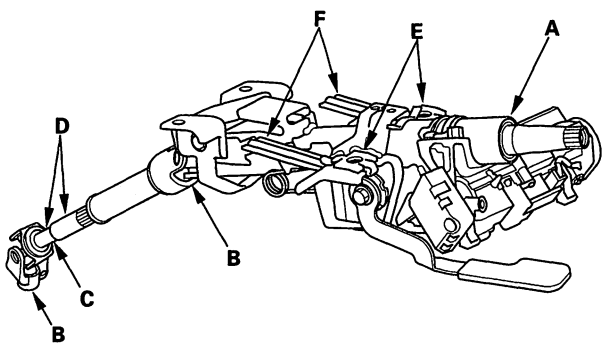


## Steering Lock Replacement

1. Remove the steering column (see page 17-25).
2. Center-punch each of the two shear bolts, and drill the heads of the bolts off with a 5 mm (3/16 in.) drill bit. Be careful not to damage the switch body when removing the shear bolts.

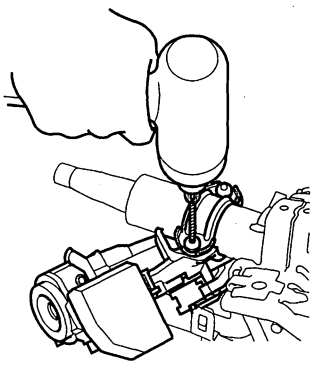

3. Remove the shear bolts from the switch body.
4. Install the switch body without the key inserted.
5. Loosely tighten the new shear bolts.
6. Insert the ignition key, and check for proper operation of the steering wheel lock and that the ignition key turns freely.
7. Tighten the shear bolts (A) until the hex heads (B) twist off.

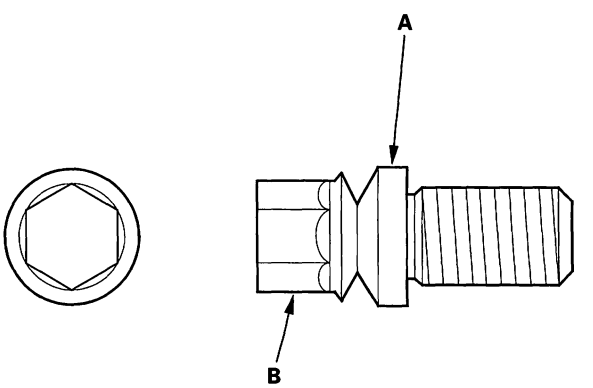


8. Register the immobilizer control unit-receiver (see page 22-341), and make sure the immobilizer system works properly.



BACK

Protected by AR

## Rack Guide Adjustment

**Special Tools Required**
Locknut wrench, 40 mm 07MAA-SL00100

1. Set the wheels in the straight ahead position.

2. Loosen the rack guide screw locknut (A) with the locknut wrench, then remove the rack guide screw (B).

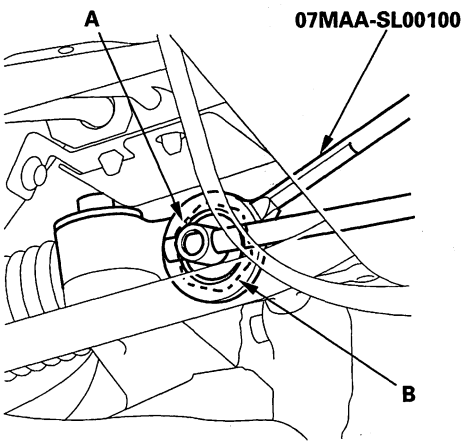


3. Remove the old sealant from the rack guide screw (A), and apply new sealant (Three Bond 1215 or Loctite 5699) to the middle of the threads (B). Loosely install the rack guide screw on the steering gearbox.

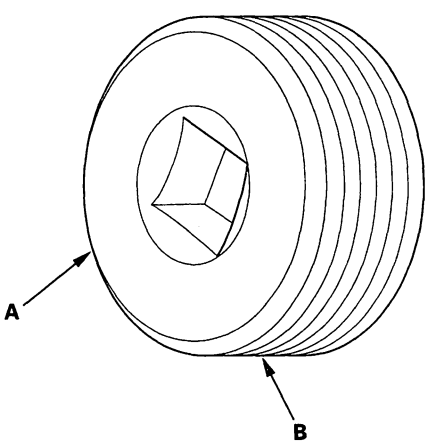


4. Tighten the rack guide screw (A) to 25 N·m (2.5 kgf·m, 18 lbf·ft), then loosen it.

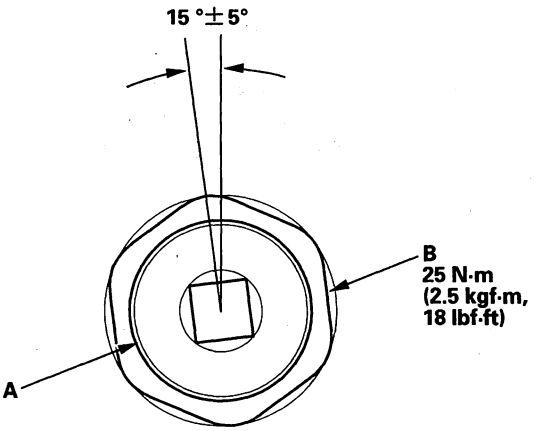


5. Retighten the rack guide screw to 8 N·m (0.8 kgf·m, 6 lbf·ft), then back it off to the specified angle.

   **Specified return angle: 15 °±5 °**

6. Hold the rack guide screw stationary with a wrench, and tighten the locknut (B) by hand until it's fully seated.

7. Install the locknut wrench on the locknut, and hold the rack guide screw stationary with a wrench. Tighten the locknut to the specified torque.

8. Check for unusual steering effort through the complete turning range.

9. Check the steering wheel rotation play (see page 17-7) and the power assist (see page 17-7).

Protected by AR



## Steering Gearbox Removal

**Special Tools Required**
Ball joint remover, 28 mm 07MAC-SL0A202

Note these items during removal:
- Using solvent and a brush, wash any oil and dirt off the valve body unit, its lines, and the end of the gearbox. Blow dry with compressed air.
- Be sure to remove the steering wheel before disconnecting the steering joint. Damage to the cable reel can occur.

1. Drain the power steering fluid (see page 17-12).
2. Make sure you have the anti-theft code for the audio and the navigation system (if equipped), then write down the audio presets.
3. Make sure the ignition switch is OFF, then disconnect the negative cable from the battery.
4. Raise the front of vehicle, and support it with safety stands in the proper locations (see page 1-7).
5. Remove the front wheels.
6. Remove the steering wheel (see page 17-22).
7. Remove the driver's dashboard undercover (see page 20-102).
8. Remove the steering joint cover (A).

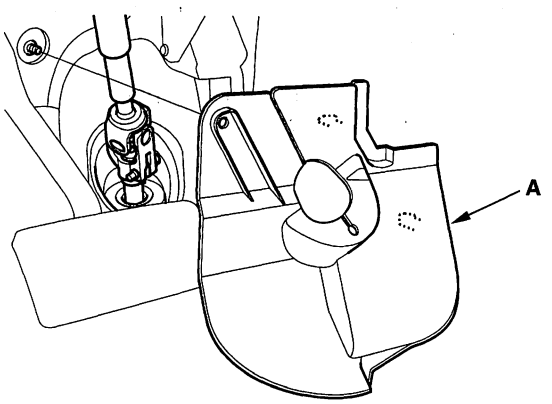


9. Remove the steering joint bolt (A), and disconnect the steering joint by moving the steering joint (B) toward the column. Hold the lower slide shaft (C) on the column with a piece of wire (D) between the joint yoke (E) on the lower slide shaft to the joint yoke on the upper shaft (see step 9 on page 17-25).

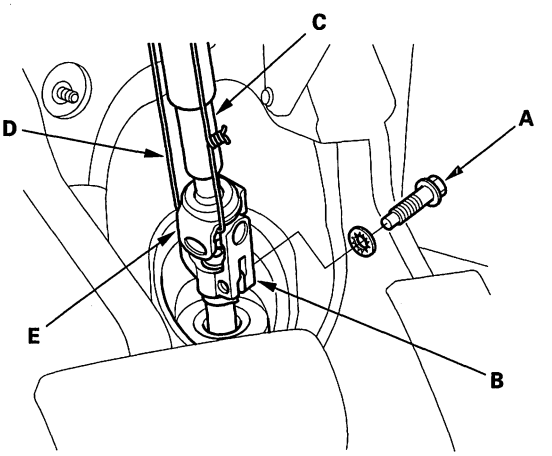


10. Remove the center guide (A) (if equipped), and discard it. The center guide is for factory assembly only.

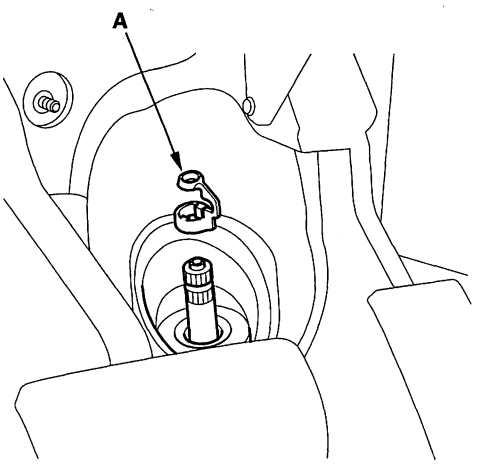




BACK

Protected by AR

11. Remove the cotter pin (A) from the 12 mm nut (B), and loosen the nut.

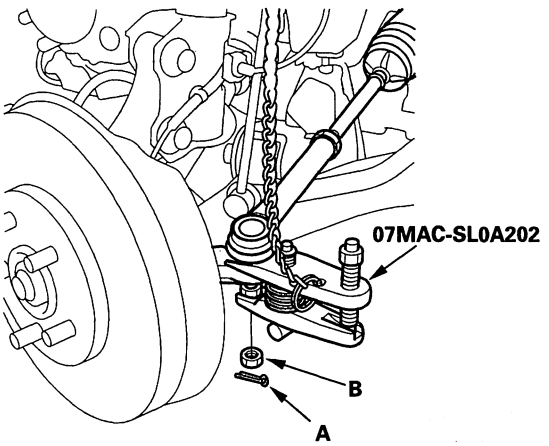


12. Separate the tie-rod ball joint and knuckle using the ball joint remover (see page 18-11).

13. Remove the air cleaner housing (A) (see page 11-394).

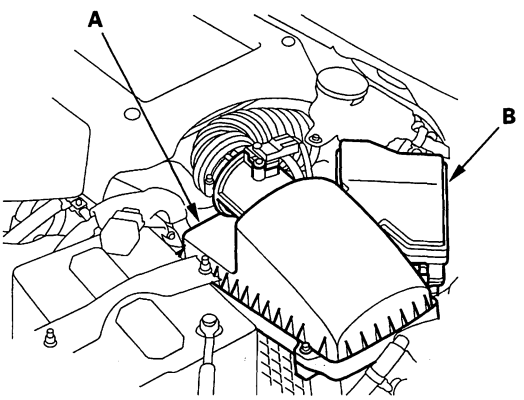


14. Remove the under-hood fuse/relay box (B) (see page 22-61).

15. Loosen the adjustable hose clamp (A), and disconnect the return hose (B).

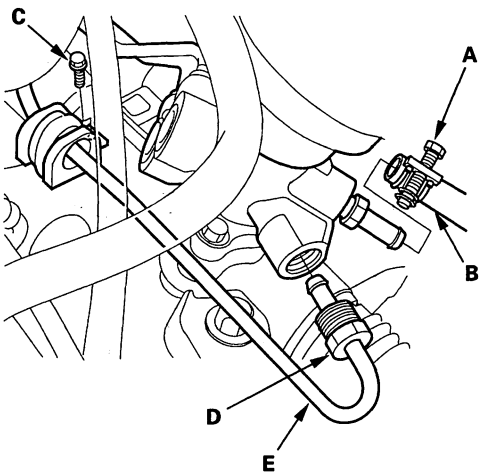


16. Remove the inlet line clamp bolt (C).

17. Loosen the 18 mm flare nut (D), and disconnect the inlet line (E).

18. Remove the 10 mm flange bolt (A) from the driver's side of the steering gearbox.

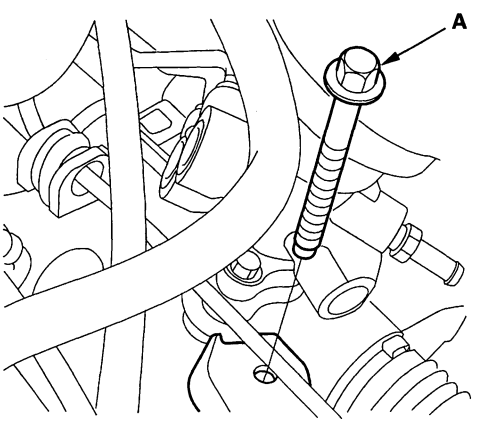


(cont'd)

Protected by AR



## Steering Gearbox Removal (cont'd)

19. Disconnect the return line holder (A), and remove the return line clamp bolt (B).

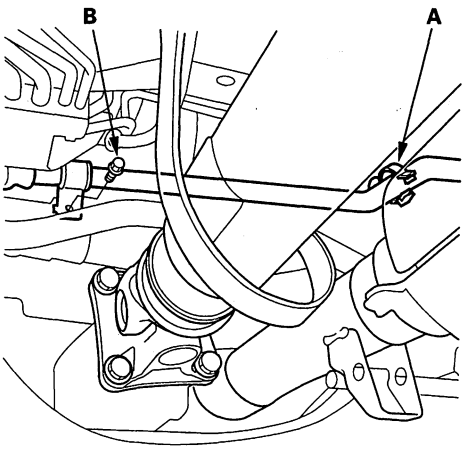


20. Remove the pump outlet hose clamp (A) from the steering gearbox.

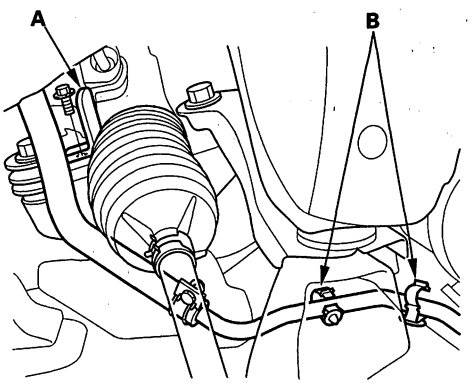


21. Disconnect the return hose clips (B).

22. Remove the P/S heat shield (A).

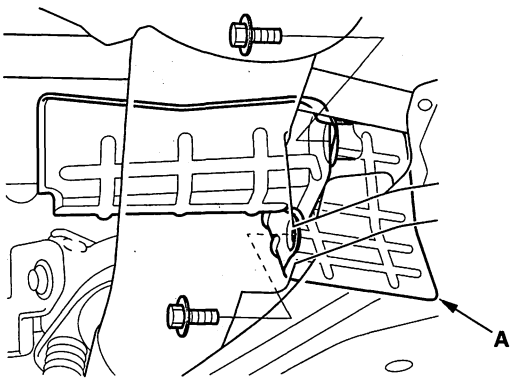


23. Remove the 10 mm flange bolt (A) and washer (B) from the driver's side of the steering gearbox.

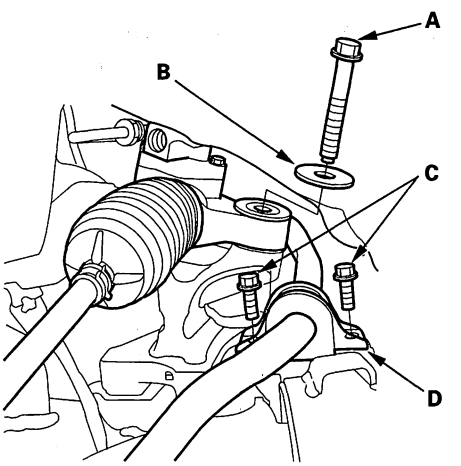


24. Remove the flange bolts (C), then remove the stabilizer bar bushing holder (D) (see page 18-22).



BACK

Protected by AR

25. Remove the 10 mm flange bolts (A) and washer (B) from the passenger's side of the steering gearbox.

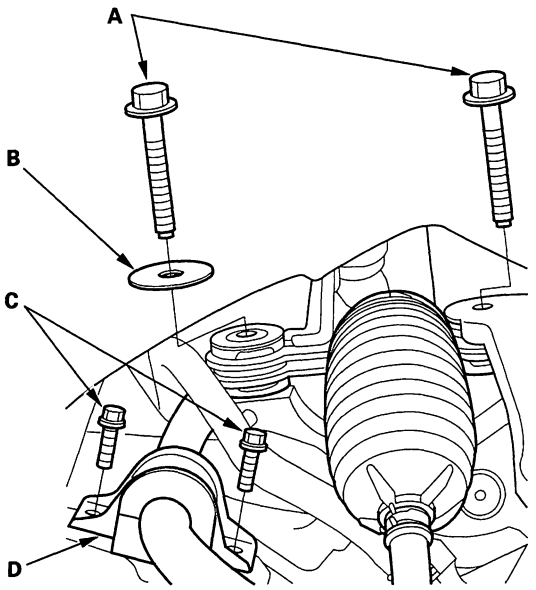


26. Remove the flange bolts (C), then remove the stabilizer bar bushing holder (D) (see page 18-22).

27. Remove the steering gearbox bracket mounting bolts (A) from the both sides of the subframe.

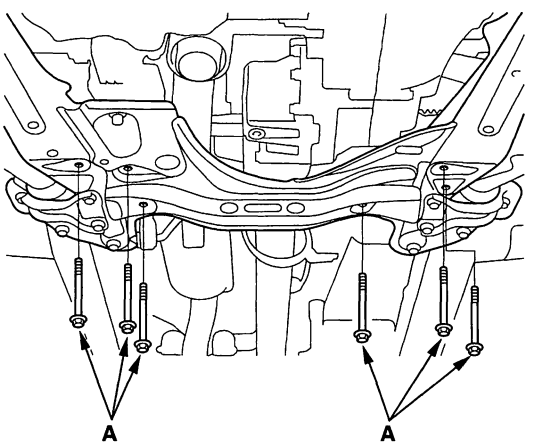


28. Remove the gearbox brackets (A).

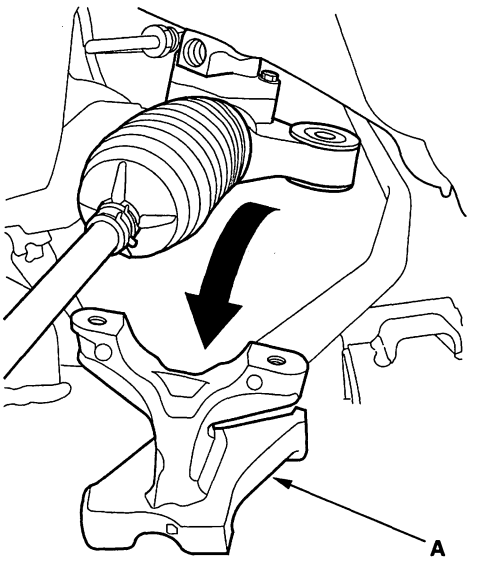


29. Move the steering gearbox toward the front, and remove the pinion shaft grommet (A) from the top of the valve housing.

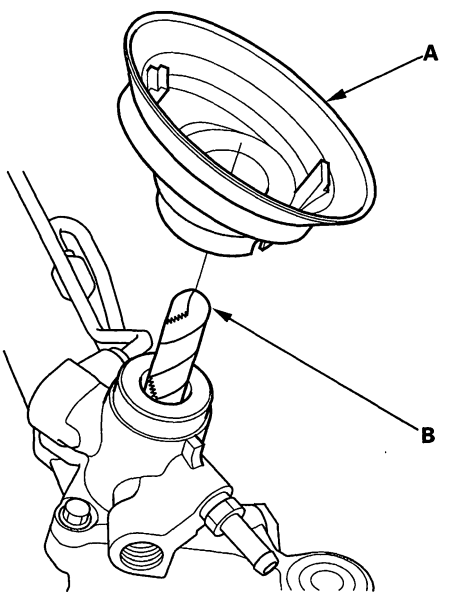


30. Apply vinyl tape (B) to the splines on the pinion shaft.

(cont'd)

Protected by AR



## Steering Gearbox Removal (cont'd)

31. Carefully move the steering gearbox and tie-rods as an assembly toward the front side until the pinion shaft (A) clears the wheelwell opening on the frame.

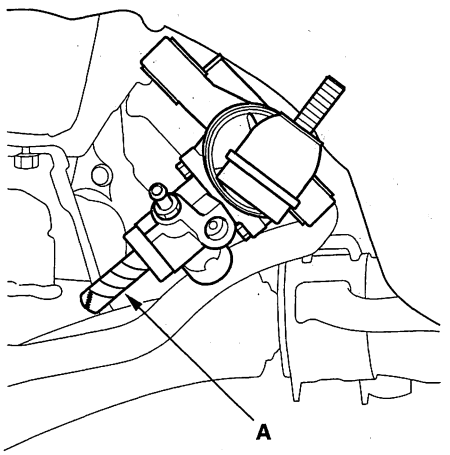


32. Remove the steering gearbox (A) through the wheelwell opening on the driver's side.

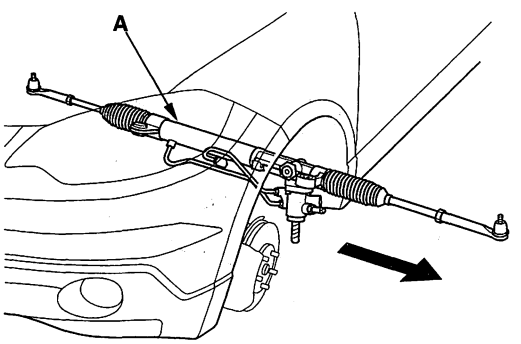


33. After removing the steering gearbox, make sure that no power steering fluid gets on the gearbox mount cushions, gearbox housing, surface of the front subframe. Wipe off any spilled fluid at once.



BACK

Protected by AR

# Steering Gearbox Overhaul

## Exploded View

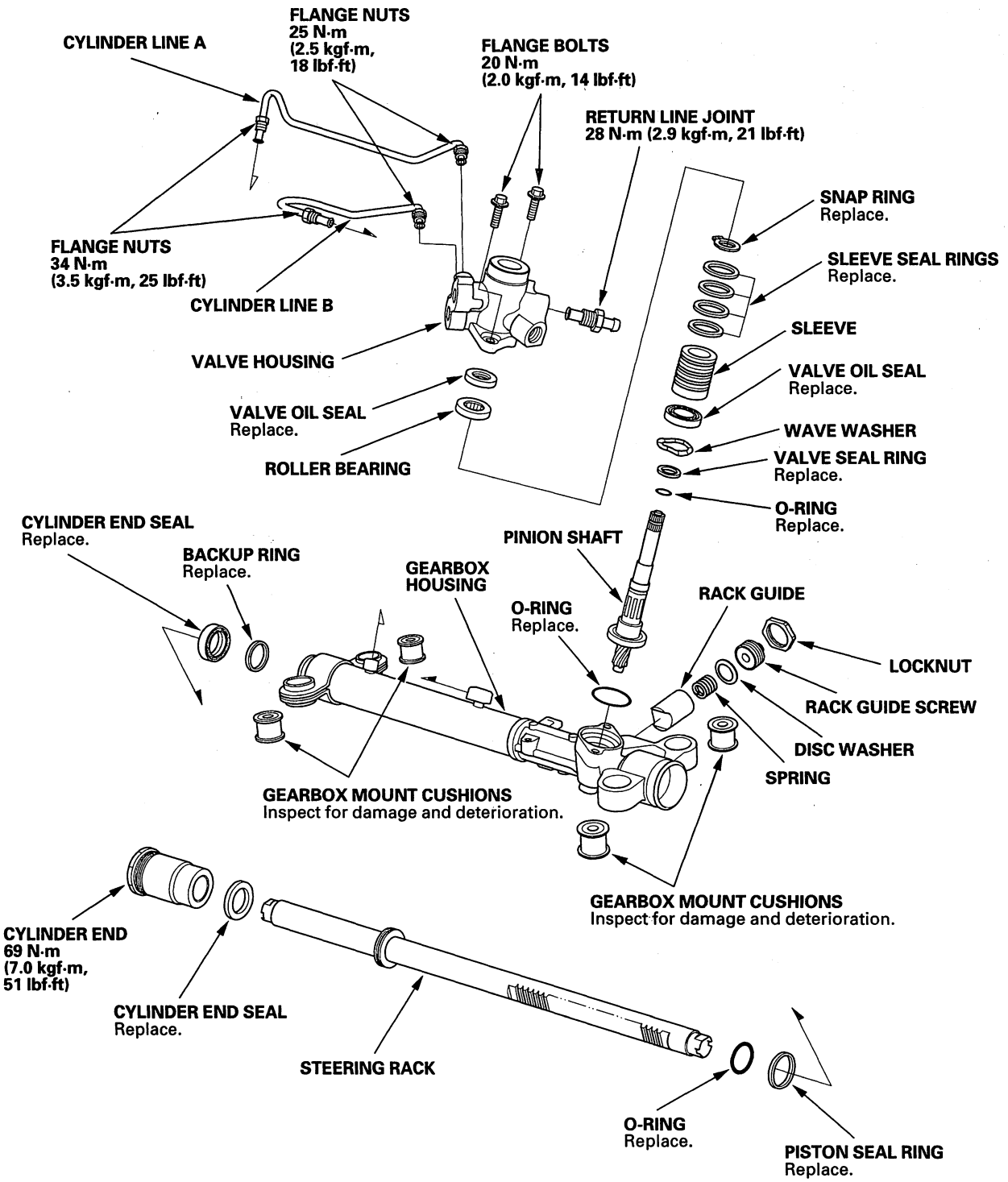


(cont'd)

Protected by AR



## Steering Gearbox Overhaul (cont'd)

**Special Tools Required**
- Cylinder end seal remover attachment 07TAF-SZ50100
- Valve seal ring sizing tool 07NAG-SR3090A
- Sleeve seal ring guide 07YAG-S2X0100
- Sleeve seal ring sizing tool, 36 mm 07ZAG-S5A0100
- Attachment, 28 x 30 mm 07946-1870100
- Driver 07749-0010000
- Piston seal ring guide 07LAG-SM40100
- Piston seal ring sizing tool 07HAG-SF1020A or 07HAG-SF10200
- Cylinder end seal slider 07LAG-SM40300
- Pincers Oetiker 1098 or equivalent, commercially available

NOTE: Refer to the Exploded View as needed during this procedure.

**Removal**

1. Remove the steering gearbox (see page 17-30).

**Disassembly**

2. Remove the boot bands (A) and tie-rod clips (B). Pull the boot away from the ends of the steering gearbox.

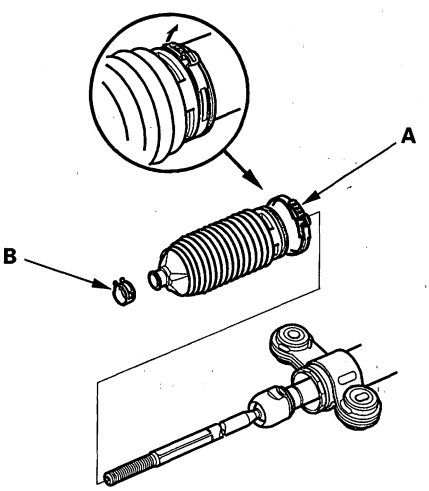


3. Unbend the lock washers (A).

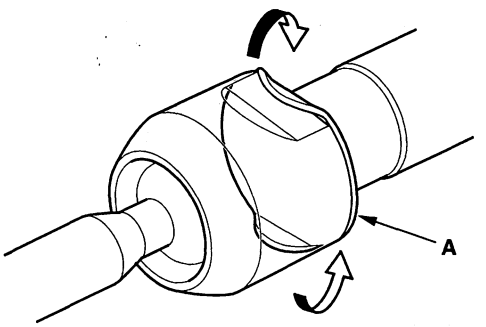


4. Hold the flat surface sections (A) of the steering rack (B) with a wrench, and unscrew both rack ends (C) with another wrench. Be careful not to damage the rack surface with the wrench.

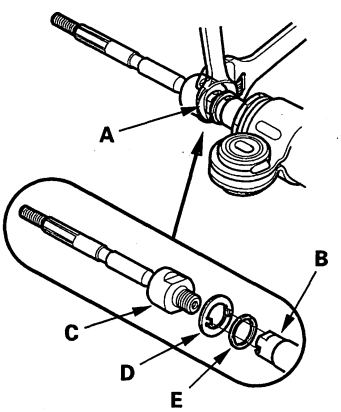


5. Remove the lock washer (D) and stop rubber (E).



BACK

Protected by AR

6. Loosen the locknut (A), then remove the rack guide screw (B).

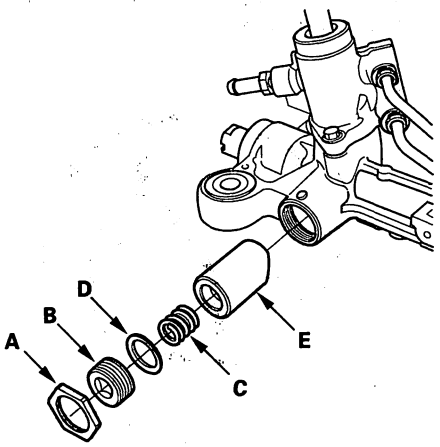


7. Remove the spring (C), disc washer (D) and the rack guide (E) from the gearbox housing.

8. Remove the cylinder lines (A) and return line joint (B) from the gearbox.

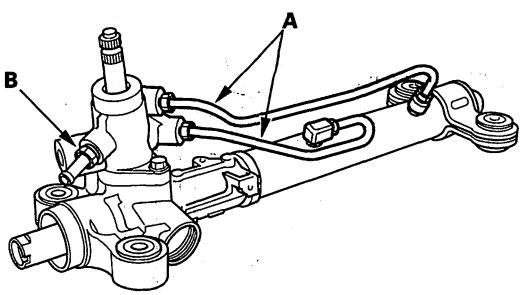


9. Drain the fluid from the cylinder fittings by slowly moving the steering rack back and forth.

10. Remove the two flange bolts, then remove the valve body unit (A) from the gearbox (B). Remove the O-ring (C).

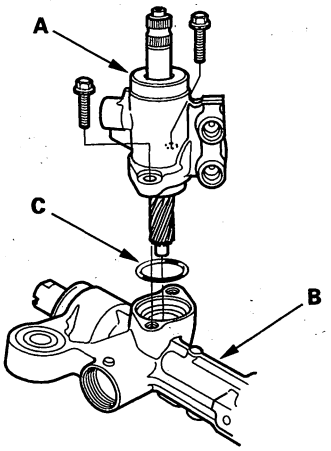


11. Drill a 3 mm (0.12 in.) diameter hole about 2.5—3.0 mm (0.10—0.12 in.) in depth in the staked point (A) on the cylinder. Do not allow metal shavings to enter the cylinder side on the gearbox housing. After removing the cylinder end (B), remove any burrs at the staked point.

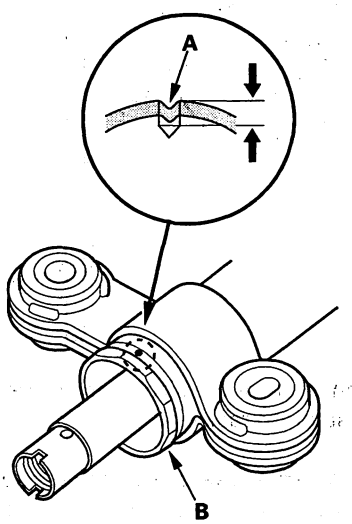


(cont'd)

Protected by AR



## Steering Gearbox Overhaul (cont'd)

12. Hold the gearbox housing using a C-clamp (commercially available) (A) and the wooden blocks (B) as shown. Do not clamp the cylinder part of the gearbox housing in the vise. Then remove the cylinder end (C).

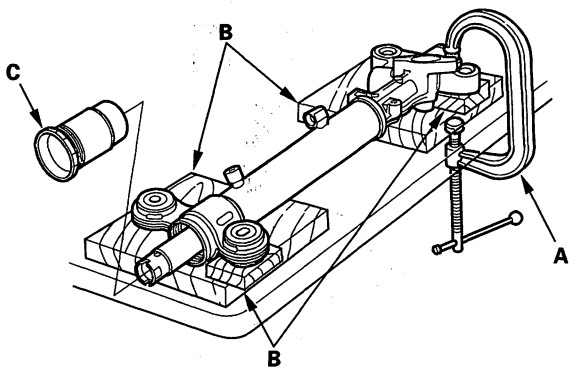


13. Install a commercially available bearing separator (A) in the gearbox housing as shown.

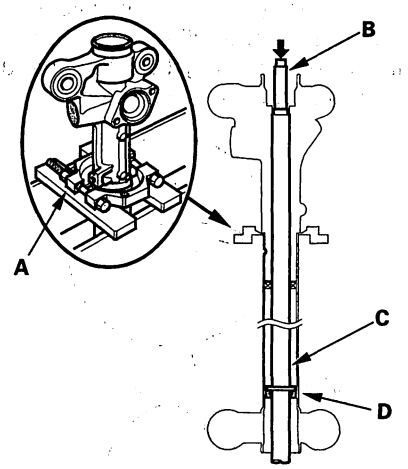


14. Place an appropriate size deep socket wrench (B) on the steering rack (C).

15. Set the steering gearbox in a press so the gearbox housing side points upward, then press the cylinder end seal (D) and steering rack out of the gearbox. Hold the steering rack to keep it from falling when pressed clear. Be careful not to damage the inner surface of the cylinder side on the gearbox housing with the tool.

16. Carefully pry the piston seal ring (A) and O-ring (B) off the rack piston. Be careful not to damage the inside of the seal ring groove and piston edges when removing the seal ring.

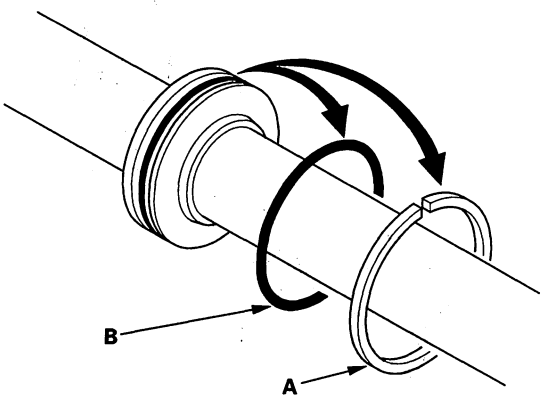


17. Turn the cylinder end seal remover attachment so it will fit through the rack guide hole of the steering gearbox, then position the seal remover on the cylinder end seal (A). Make sure that the seal remover is securely positioned on the seal edges.

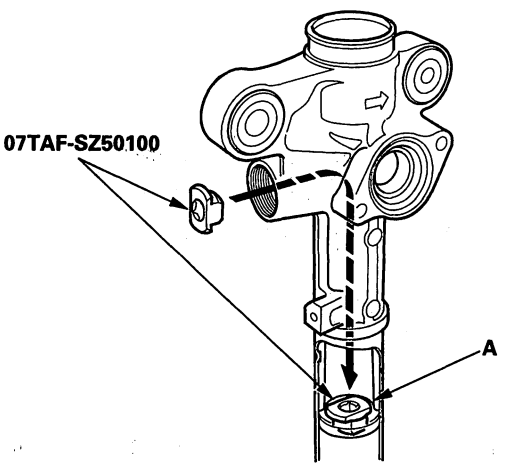




BACK

Protected by AR

18. Insert 24 "long, 3/8" drive extension (A), on the cylinder end seal remover attachment. Place the steering gearbox in a press, then remove the cylinder end seal (B) from the gearbox by pressing on the 24 "long 3/8" drive extension.

    Note these items when pressing the cylinder end seal:
    - Keep the tool straight to avoid damaging the cylinder wall. Check the tool angle, and correct it if necessary, when removing the cylinder end seal.
    - Use a press to remove the cylinder end seal. Do not try to remove the seal by striking the tool; striking the tool would brake the cylinder end seal, and the seal would remain in the gearbox.

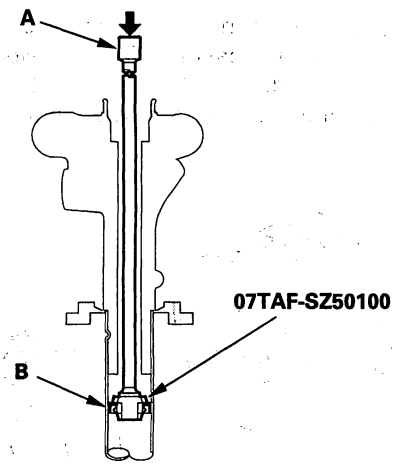


19. Before removing the valve housing (A), apply vinyl tape (B) to the splines on the pinion shaft.

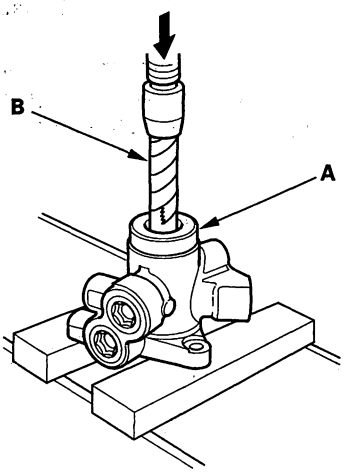


20. Separate the valve housing from the pinion shaft/ valve using a press.

(cont'd)

Protected by AR



## Steering Gearbox Overhaul (cont'd)

21. With your finger, check the inner wall of the valve housing where the seal ring slides. If there is a step in the wall, the housing is worn. Replace it.

    NOTE: There may be sliding marks from the seal ring on the wall of the valve housing. Replace the valve housing only if the wall is stepped.

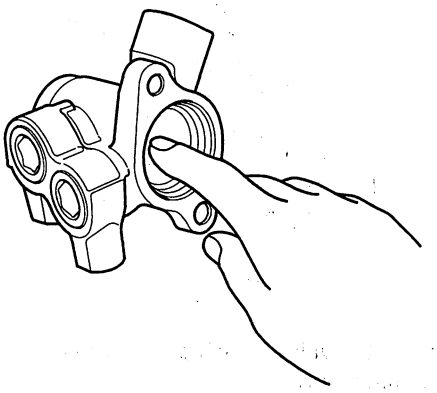

22. Check for wear, burrs, and other damage to the edges of the grooves in the sleeve.

    NOTE: The pinion shaft and sleeve are a precision matched set. If either the pinion shaft or sleeve must be replaced, replace both parts as a set.

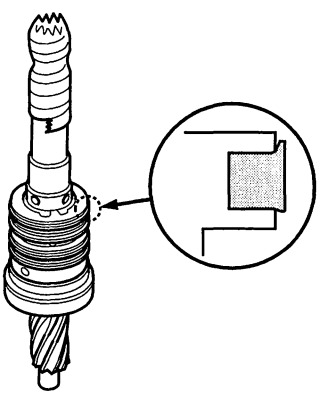

23. Remove the snap ring (A) and sleeve (B) from the pinion shaft.

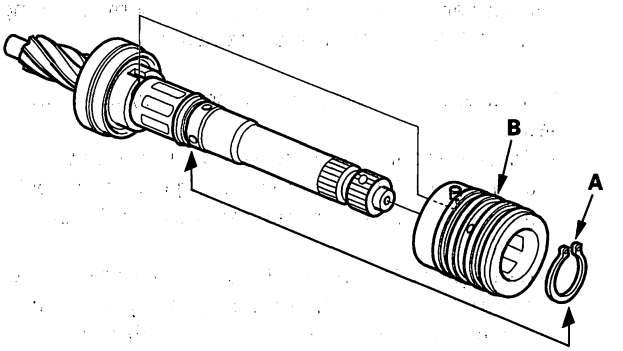


24. Using a cutter or an equivalent tool, cut and remove the four seal rings from the sleeve. Be careful not to damage the edges of the sleeve grooves and outer surface when removing the seal rings.

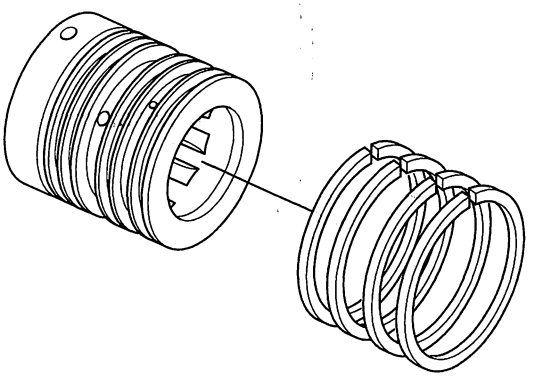



BACK

Protected by AR

25. Using a cutter or an equivalent tool, cut the valve seal ring (A) and O-ring (B) at the cutting groove position (C) in the pinion shaft. Remove the valve seal ring and O-ring. Be careful not to damage the edges of the pinion shaft groove and outer surface when removing the valve seal ring and O-ring.

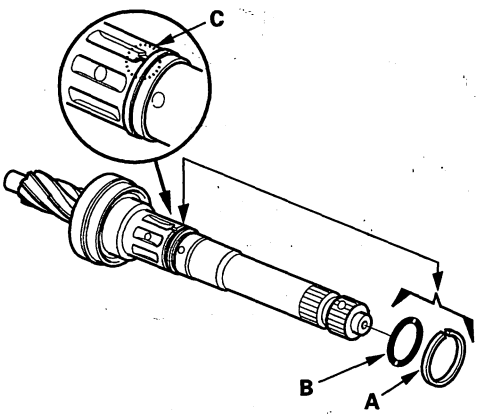


26. Remove the valve oil seal (A) and wave washer (B) from the pinion shaft.

Note these items during disassembly:
- Inspect the ball bearing (C) by rotating the outer race slowly. If there is any excessive play or wear, replace the pinion shaft and sleeve as an assembly.
- The pinion shaft and sleeve are a precise fit; do not intermix old and new pinion shafts and sleeves.

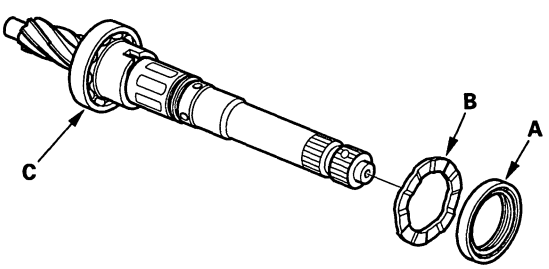


27. Remove the valve oil seal (A) and roller bearing (B) out of the valve housing using a hydraulic press and an appropriate size socket wrench.

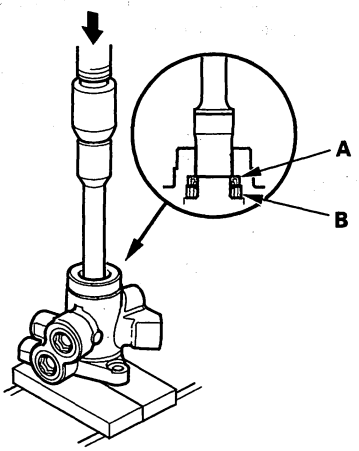


28. Clean the disassembled parts with solvent, and dry them with compressed air. Do not dip rubber parts in the solvent.

(cont'd)

Protected by AR



## Steering Gearbox Overhaul (cont'd)

**Reassembly**

29. Apply vinyl tape (A) to the stepped portion of the pinion shaft, and coat the surface of the vinyl tape with power steering fluid.

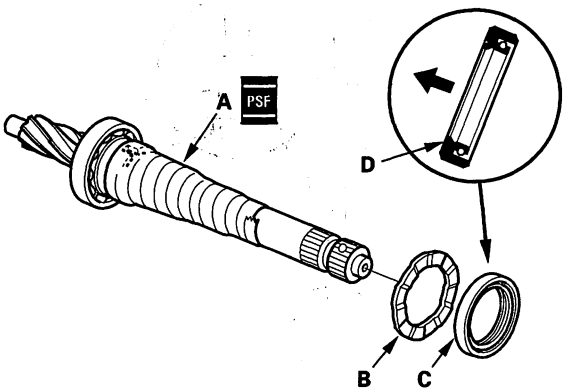


30. Install the wave washer (B).

31. Coat the inside surface of the new valve oil seal (C) with power steering fluid, and install the seal with its grooved side facing opposite the bearing, then slide it over the pinion shaft, being careful not to damage its sealing lip (D).

32. Apply vinyl tape (A) to the splines and stepped portion of the shaft, and coat the surface of the vinyl tape with power steering fluid.

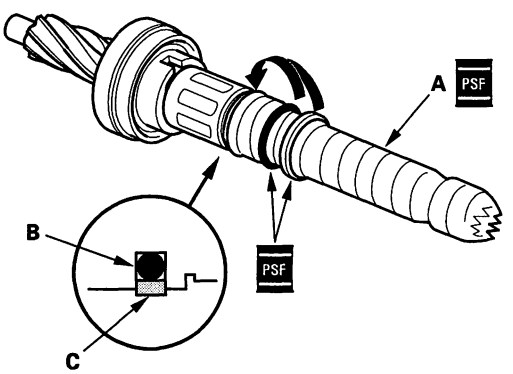


33. Fit the new O-ring (B) in the groove of the pinion shaft. Then slide the new valve seal ring (C) over the shaft and in the groove on the pinion shaft.

34. Remove the tape, and apply power steering fluid to the surface of the valve seal ring (A).

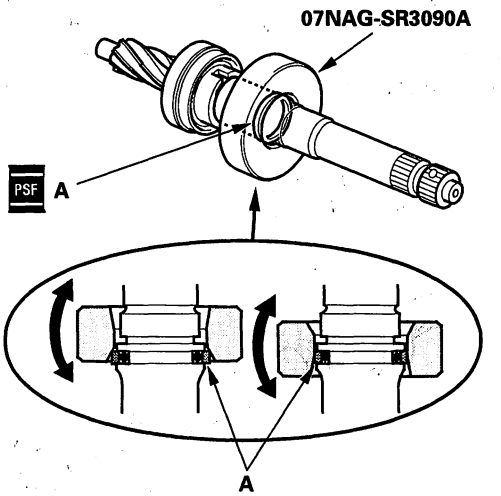


35. Apply power steering fluid to the inside of the valve seal ring sizing tool. Set the larger diameter end of the sizing tool over the valve seal ring, and move the sizing tool up and down several times to make the valve seal ring fit in the pinion shaft groove.

36. Remove the sizing tool, turn it over, slide the smaller diameter end over the valve seal ring. Move it up and down several times to make the valve seal ring fits snugly in the pinion shaft groove.



BACK

Protected by AR

37. Apply power steering fluid to the surface of the sleeve seal ring guide. Slip two new seal rings (A) over the ring guide from the smaller diameter end, and expand them. Install only two rings at a time from each end of the pinion shaft sleeve (B).

    *Note these items* when installing the seal ring:
    - *Do not over-expand* the seal ring. Install the resin seal rings with care so as not to damage them. After installation, make sure you contract the seal rings using the sizing tool.
    - There are two types of sleeve seal rings; black and brown. Do not mix the different types of rings as they are not compatible.

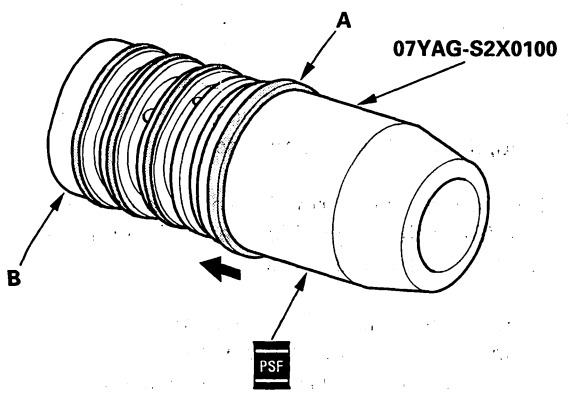


38. Align the ring guide with each groove in the sleeve, and slide a sleeve seal ring into each groove. After installation, compress the seal rings with your fingers temporarily.

39. Apply power steering fluid to the seal rings on the sleeve, and to the entire inside surface of the sleeve seal ring sizing tool, then slowly insert the sleeve into the sizing tool.

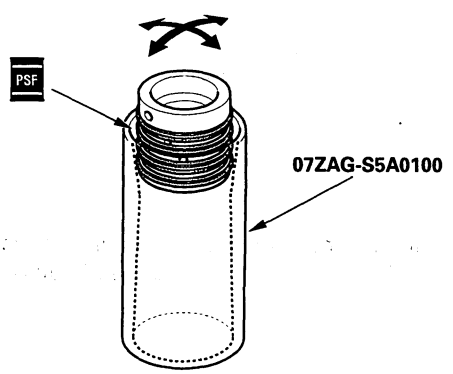


40. Move the sleeve back and forth several times to make the seal rings fit snugly in the sleeve. Make sure the seal rings are not twisted.

41. Apply power steering fluid to the surface of the pinion shaft (A). Slide the sleeve (B) onto the pinion shaft by aligning the locating pin (C) on the inside of the sleeve with the cutout (D) in the shaft. Then install the new snap ring (E) securely in the pinion shaft groove. Be careful not to damage the valve seal ring when inserting the sleeve.

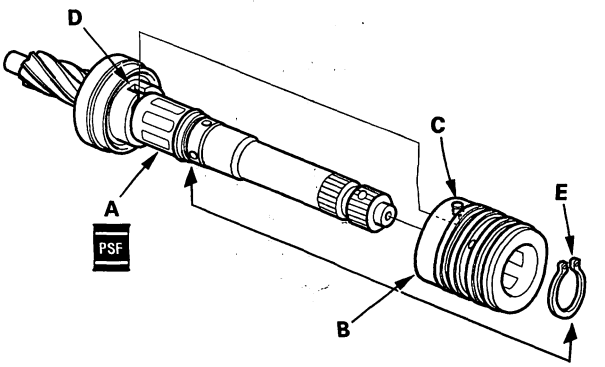


42. Apply power steering fluid to the seal ring lip of the new valve oil seal (A), then install the seal in the valve housing (B) using a hydraulic press and driver. Install the seal with its grooved side facing the tool.

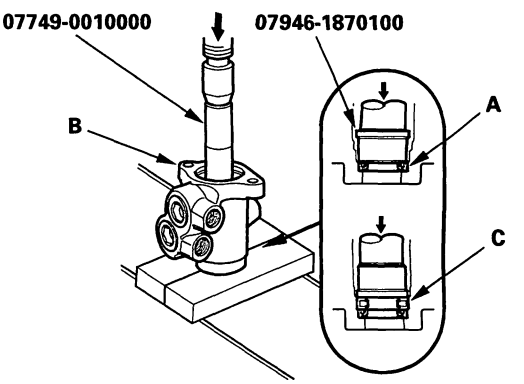


43. Press the roller bearing (C) into the valve housing with a hydraulic press and attachment.

(cont'd)

Protected by AR



## Steering Gearbox Overhaul (cont'd)

44. Apply vinyl tape (A) to the pinion shaft, then coat the vinyl tape with power steering fluid.

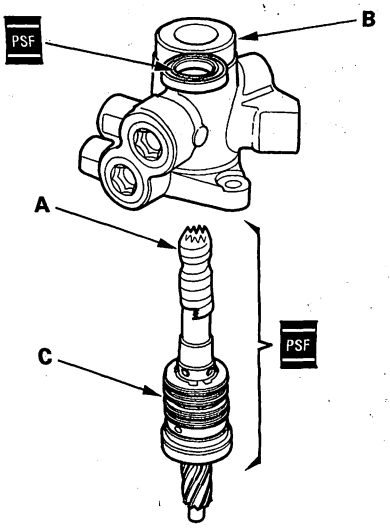


45. Insert the pinion shaft into the valve housing (B). Be careful not to damage the valve seal rings (C).

46. Remove the vinyl tape from the pinion shaft, then remove any residue from the tape adhesive.

47. Press the pinion shaft/sleeve into the valve housing with a hydraulic press. Check that the pinion shaft/sleeve turns smoothly by hand after installing it.

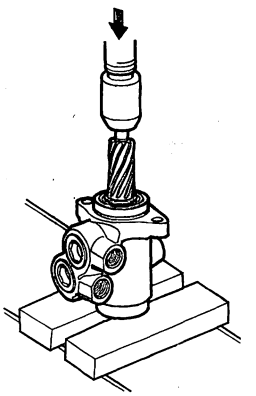

48. Coat the piston seal ring guide with power steering fluid, then slide it onto the rack, big end first.

49. Position the new O-ring (A) and new piston seal ring (B) on the ring guide, then slide them down toward the big end of the tool.

    Note these items during reassembly:
    - Do not over expand the resin seal rings. Install the resin seal rings with care so as not to damage them. After installation, make sure you contract the seal ring using the sizing tool.
    - Replace piston's O-ring and seal ring as a set.

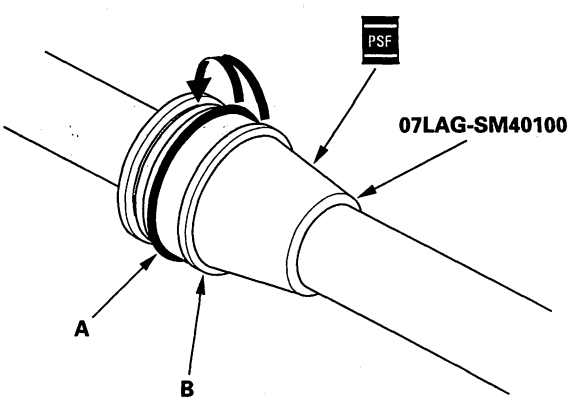


50. Pull the O-ring off into the piston groove, then pull the piston seal ring off into the piston groove on top of the O-ring.



BACK

Protected by AR

51. Coat the piston seal ring (A) and the inside of the piston seal ring sizing tool with power steering fluid, then carefully slide the tool onto the rack and over the piston seal ring.

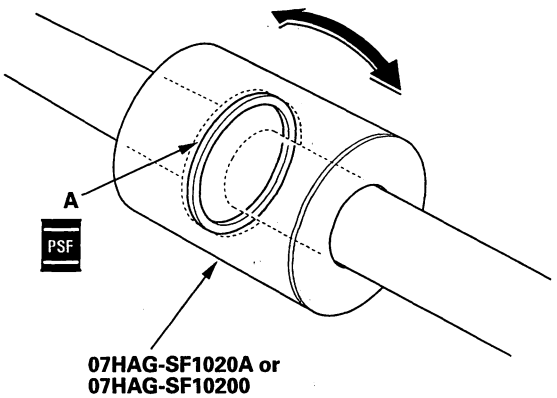


52. Move the sizing tool back and forth several times to make the piston seal ring fit snugly in the piston.

53. Coat the sliding surface of the cylinder end seal slider (A) and new cylinder end seal (B) with power steering fluid. Place the seal on the special tool with its grooved side (C) facing opposite the special tool.

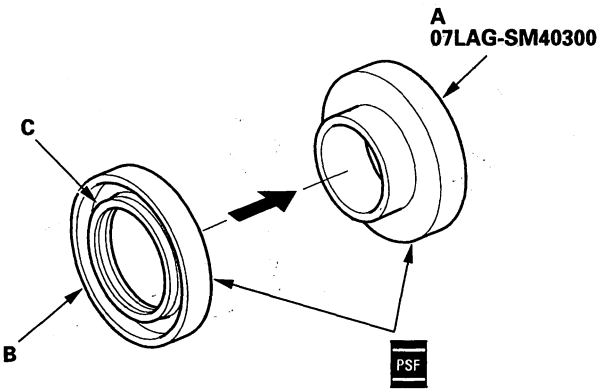


54. Coat the surface of the steering rack (A) with power steering fluid.

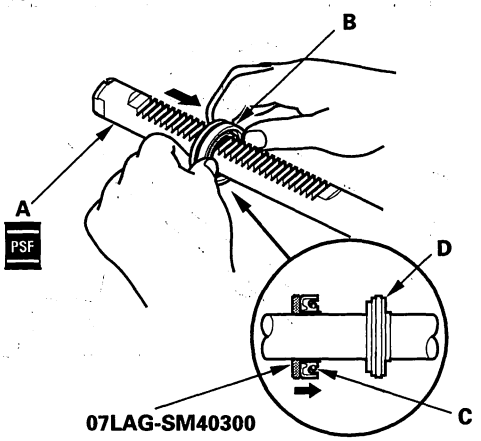


55. Install the cylinder end seal (B) onto the steering rack with its grooved side (C) toward the piston (D).

56. Separate the cylinder end seal from the cylinder end seal slider, then remove the seal slider.

(cont'd)

Protected by AR



## Steering Gearbox Overhaul (cont'd)

57. Install the new backup ring (A) on the steering rack, then place the backup ring and cylinder end seal (B) against the piston (C).

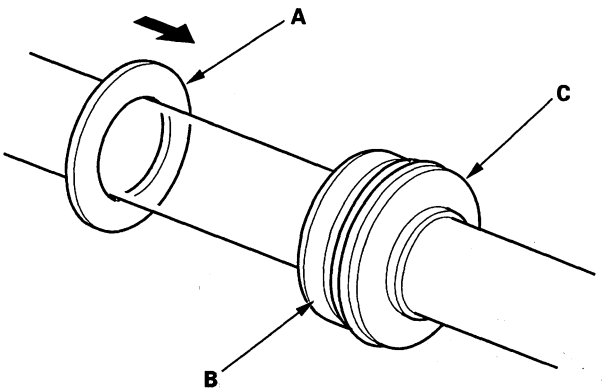


58. Apply steering grease to the steering rack teeth, then insert the steering rack into the gearbox housing. Be careful not to damage the inner surface of the cylinder wall with the rack edges.

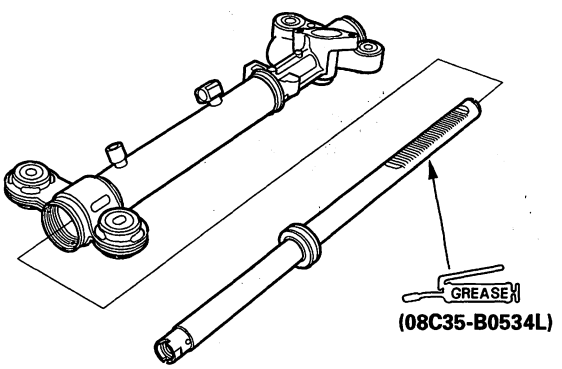


59. Insert an appropriate size socket wrench (A) onto the steering rack as shown.

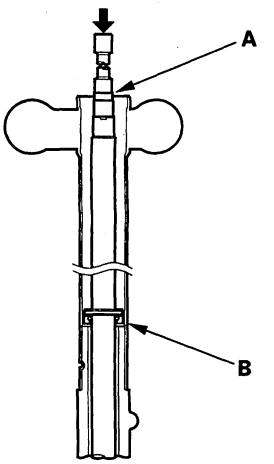


60. Install the cylinder end seal (B) into the bottom of the cylinder by pressing on the tool with a press. Do not push on the tool with excessive force as it may damage the cylinder end seal.

61. Remove the tool, and center the steering rack.

62. Coat the sliding surface of the cylinder end seal slider (A) and new cylinder end seal (B) with power steering fluid. Place the seal on the seal slider with its grooved side (C) facing opposite the seal slider.

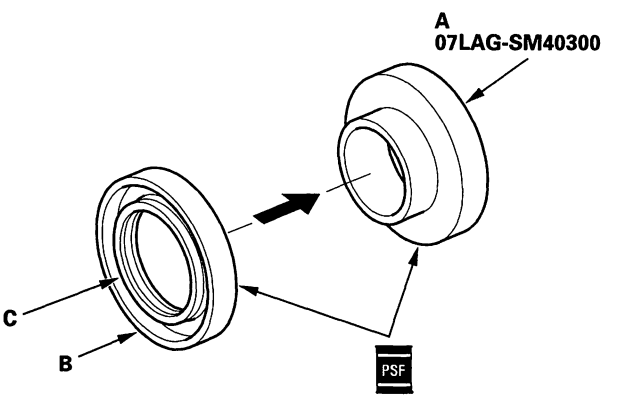




BACK

Protected by AR

63. Coat the inside surface of the cylinder end seal slider and steering rack with power steering fluid, then install the cylinder end seal (A) onto the steering rack with its grooved side toward the cylinder.

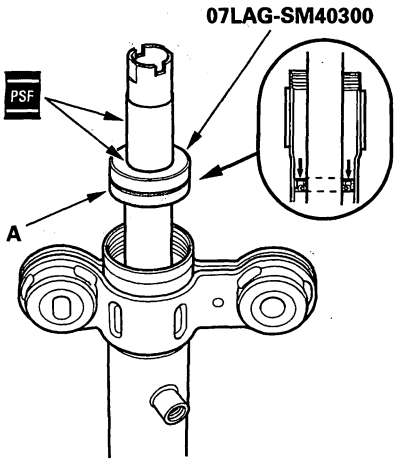


64. Separate the cylinder end seal from the seal slider, then remove the seal slider.

65. Push in the cylinder end seal with your finger. Be careful not to damage the face of the seal with the threads and burrs at the staked position of the cylinder housing.

66. Hold the gearbox housing using a C-clamp (commercially available) (A) and the wooden blocks (B). Do not clamp the cylinder part of the gearbox housing in the vise.

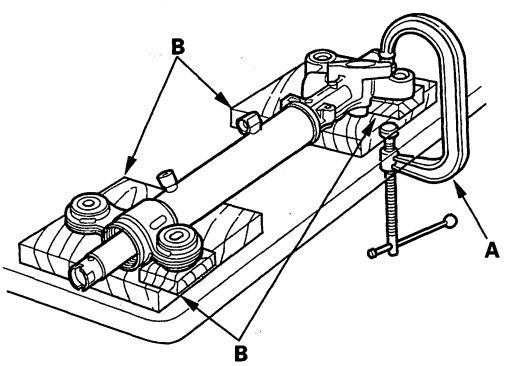


67. Coat the inside surface of the cylinder end (A) with power steering fluid, then install the cylinder end by screwing it into the cylinder (B). Tighten the cylinder end to the specified torque.

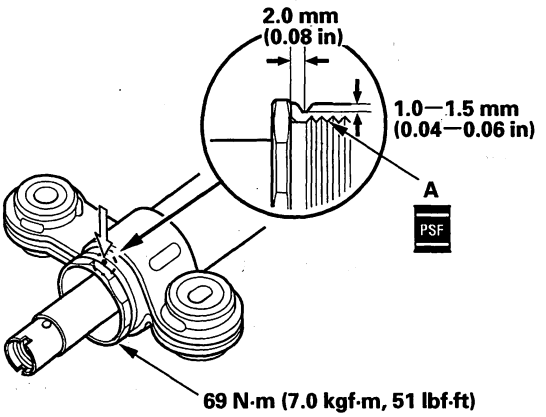


68. Stake the point of the cylinder shown (opposite from where the stake was removed during disassembly).

(cont'd)

Protected by AR



## Steering Gearbox Overhaul (cont'd)

69. Coat the new O-ring (A) with steering grease, and carefully fit it on the valve housing.

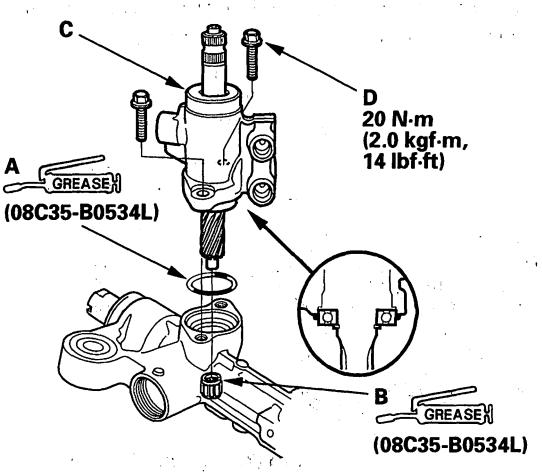


70. Apply steering grease to the needle bearing (B) in the gearbox housing, then install the valve body unit (C) by engaging the gears. Note the valve body unit installation position (direction of the line connections).

71. Tighten the flange bolts (D) to the specified torque.

72. Install the cylinder lines (A) and return line joint (B).

    Note these items during reassembly:
    - Thoroughly clean the joints of the cylinder lines. The joints must be free of foreign material.
    - Install the cylinder lines by tightening the flare nuts by hand first, then tighten the flare nuts to the specified torque.

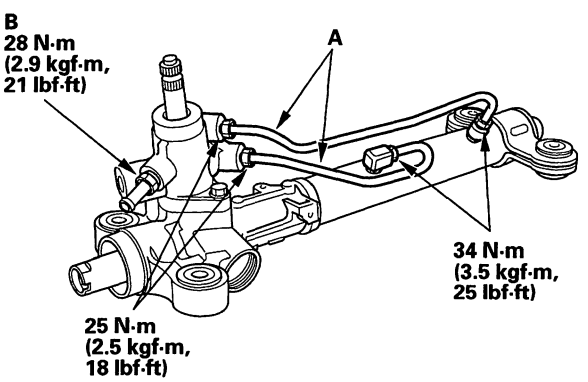


73. Apply steering grease to the sliding surface of the rack guide (A), and install it onto the gearbox housing.

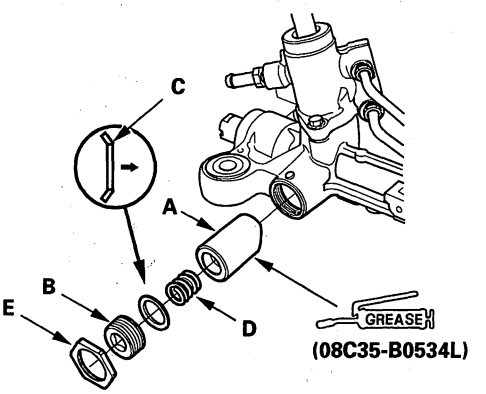


74. Remove the old sealant from the rack guide screw (B), then apply new sealant (Three Bond 1215 or Loctite 5699) to the middle of the threads. Install the disc washer (C) with its convex side facing the rack guide, the spring (D), rack guide screw and locknut (E).

75. Adjust the rack guide screw (see page 17-29). After adjusting, check that the rack moves smoothly by sliding it right and left.

76. Install a new stop rubber (A) and a new lock washer (B). Align the lock washer tabs (C) with the slots (D) on the rack end (E) while holding the lock washer in place. Repeat this step for the other side of the rack.

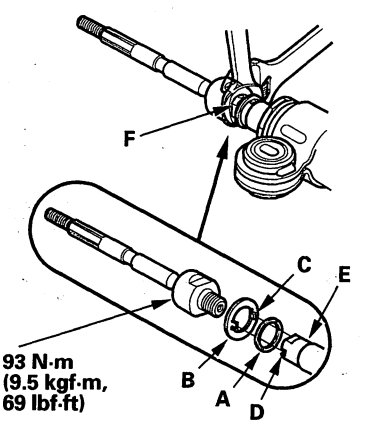


77. Hold the flat surface sections (F) of the steering rack with a wrench, and tighten both rack ends. Be careful not to damages the rack surface with the wrench.



BACK

Protected by AR

78. Bend the lock washer (A) back against the flat spots on the rack end joint housing.

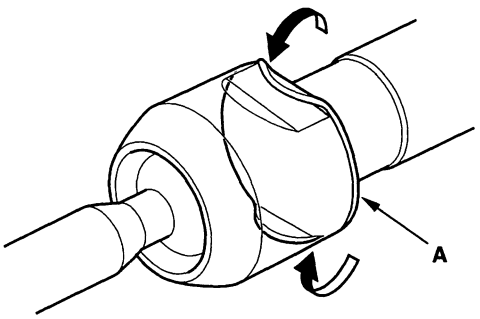


79. Apply multipurpose grease to the circumference of the rack end joint housing (A).

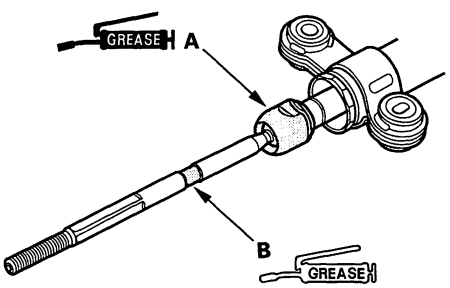


(P/N 08798-9013)

80. Apply a light coat of silicone grease (P/N 08798-9013) to the boot grooves (B) on the rack end.

81. Center the steering rack within its stroke.

82. Clean off the any grease or contamination from the boot installation grooves (A) around on the gearbox housing. Install the boots (B) on the rack ends with the tie-rod clips (C), and fit the boot end in the installation grooves in the housing properly.

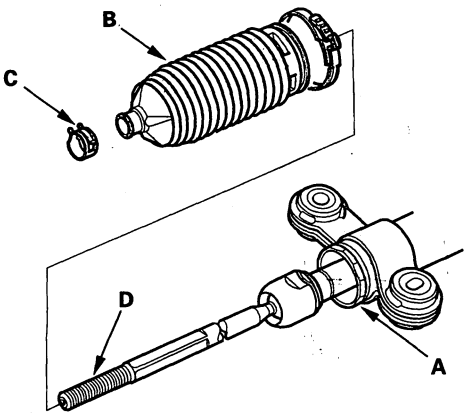


83. After installing the boots, wipe the grease off the threaded section (D) of the rack end.

84. Install the new boot bands by aligning the tabs (A) with the holes (B) on the band.

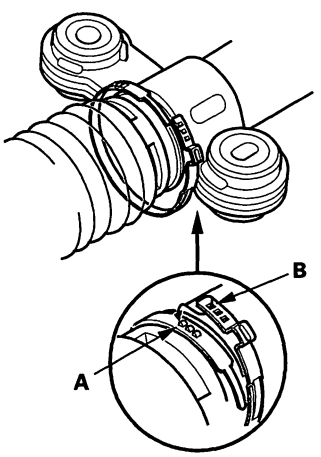


(cont'd)

Protected by AR



## Steering Gearbox Overhaul (cont'd)

85. Close the ear portion (A) of the band (B) with commercially available pincers, Oetiker 1098 or equivalent (C).

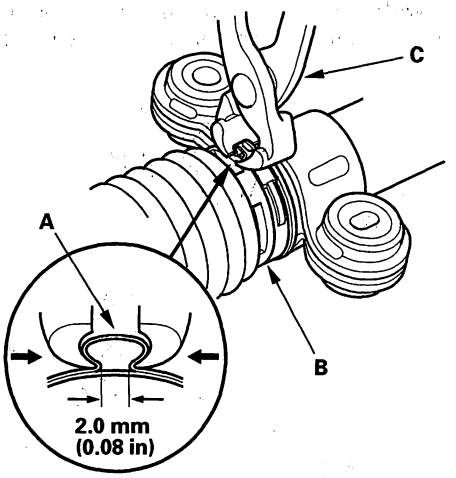


86. Slide the rack right and left to be certain that the boots are not deformed or twisted.

87. Reinstall the steering gearbox (see page 17-51).



BACK

Protected by AR

## Steering Gearbox Installation

1. Before installing the steering gearbox, make sure that no power steering fluid is on the mating surface of the gearbox and the front subframe. To prevent the gearbox mounting bolts from loosening after the installation, remove the power steering fluid from the mount cushions and bolt holes.

2. Slide the steering gearbox (A) between the front subframe and body from the driver's side. Place the gearbox in position on the front subframe.

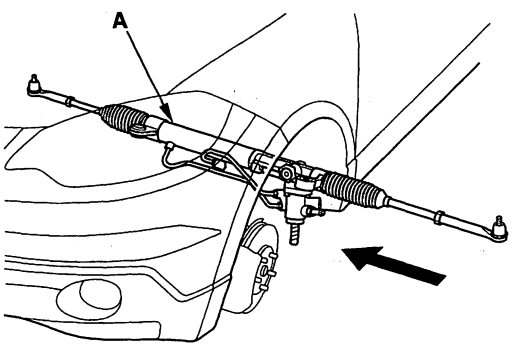


3. Rotate the steering gearbox so the pinion shaft (A) points downward.

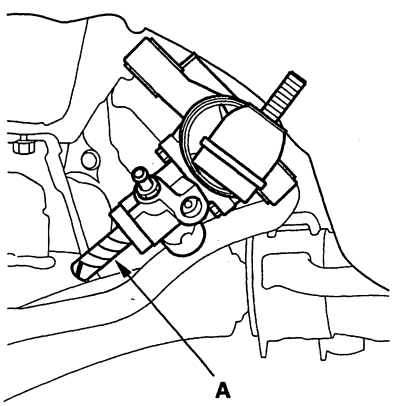


4. Continue moving the gearbox toward the passenger's side until the steering gearbox is in position. Make sure the power steering return line and feed line are routed above the gearbox.

5. Remove the vinyl tape from pinion shaft, and install the pinion shaft grommet (A). Align the slot in the pinion shaft grommet with the lug portion (B) on the valve housing.

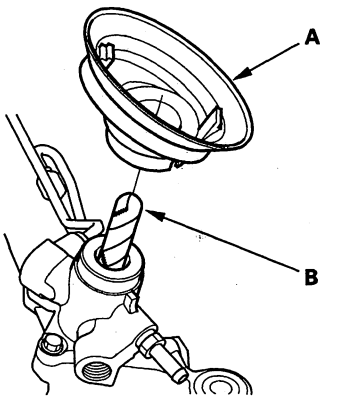


(cont'd)

Protected by AR



## Steering Gearbox Installation (cont'd)

6. Install the gearbox brackets (A).

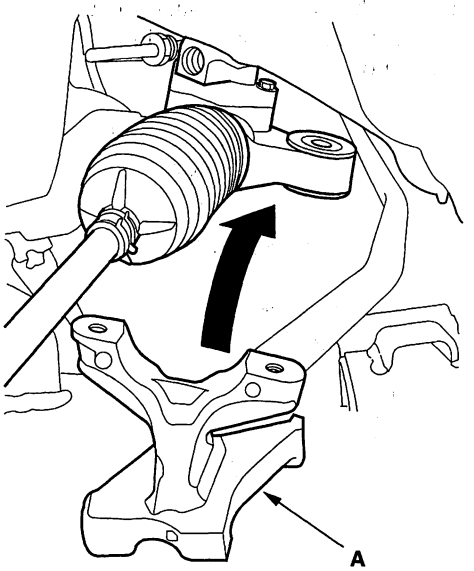


7. Tighten the steering gearbox bracket mounting bolts (A) to the specified torque.

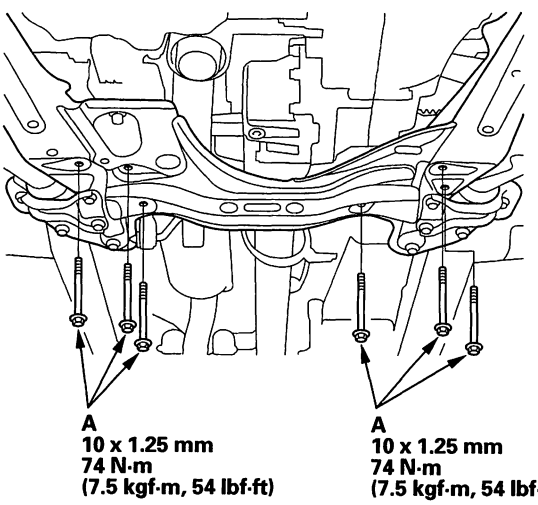


8. Loosely install the gearbox mounting bolts (A) and washer (B).

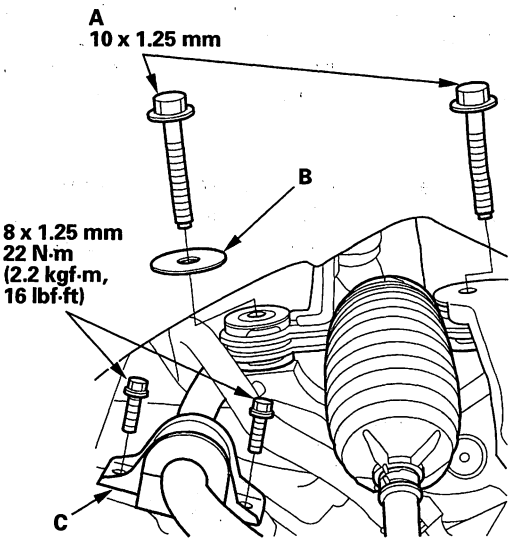


9. Install the stabilizer bar bushing holder (C) (see page 18-22).

10. Loosely install the gearbox mounting bolts (A) and washer (B).

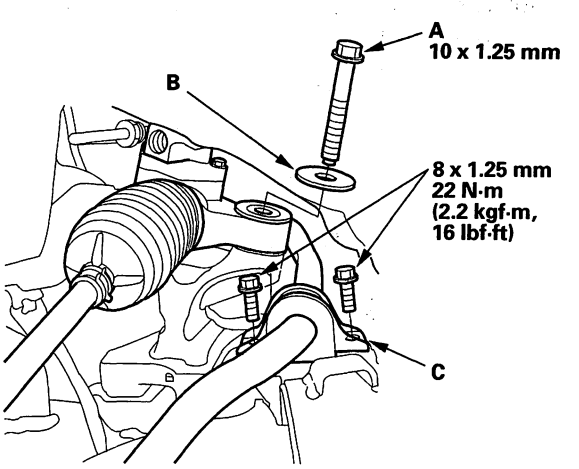


11. Install the stabilizer bar bushing holder (C) (see page 18-22).



BACK

Protected by AR

12. Install the P/S heat shield (A).

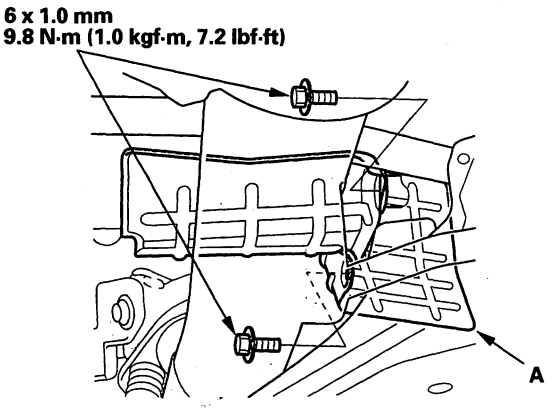


13. Install the pump outlet hose clamp (A) on the steering gearbox.

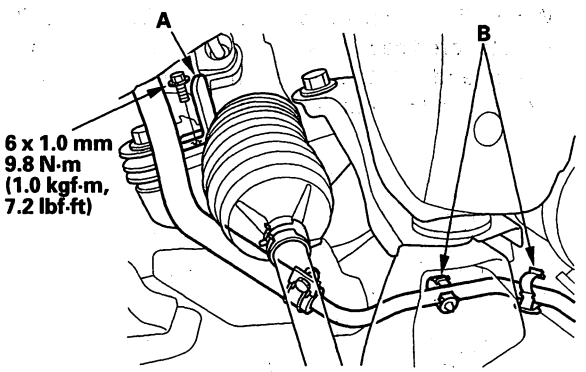


14. Connect the return hose clips (B).

15. Connect the return line holder (A), and install the return line clamp bolt (B).

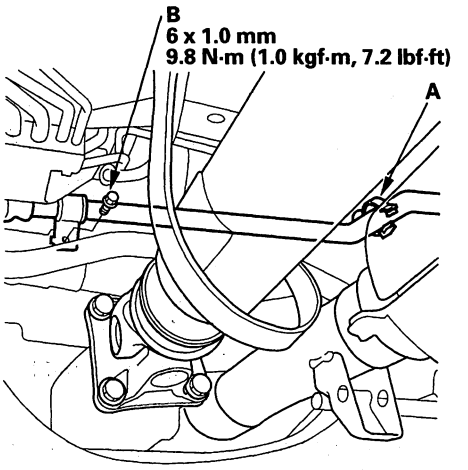


16. Loosely install the gearbox mounting bolts (A).

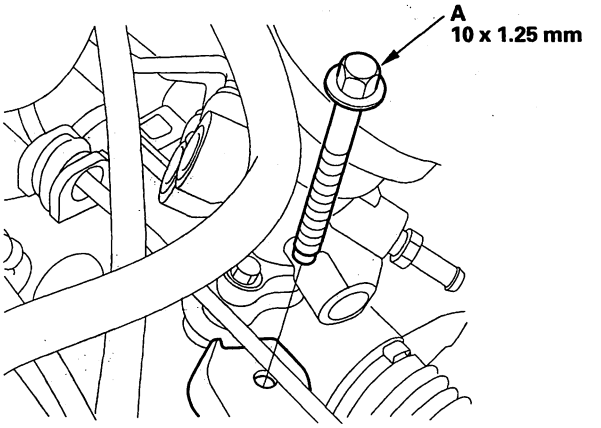


(cont'd)

Protected by AR



## Steering Gearbox Installation (cont'd)

17. Tighten the gearbox mounting bolts to the specified torque in the sequence shown.

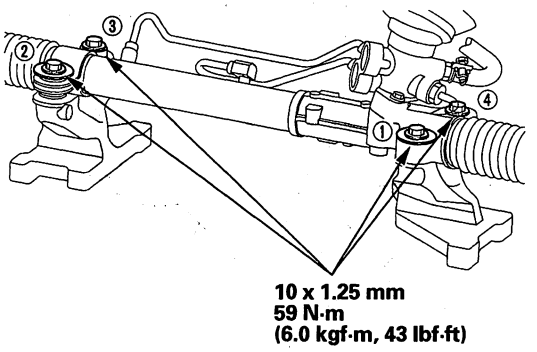


18. Connect the inlet line (A), and tighten the 18 mm flare nut to the specified torque.

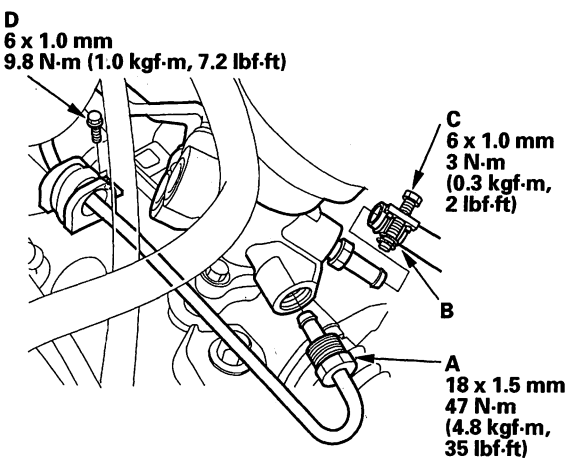


19. Connect the return hose (B) securely, and tighten the adjustable hose clamp (C) (see page 17-13).

20. Install the inlet line clamp bolt (D).

21. Install the under-hood fuse/relay box (A) (see page 22-61).

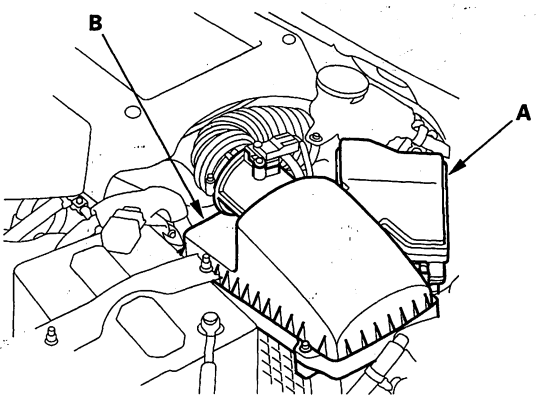


22. Install the air cleaner housing (B) (see page 11-394).

23. Wipe off any grease contamination from the ball joint tapered section and threads. Reconnect the tie-rod ends (A) to the steering knuckles. Install the 12 mm nut (B), and tighten it.

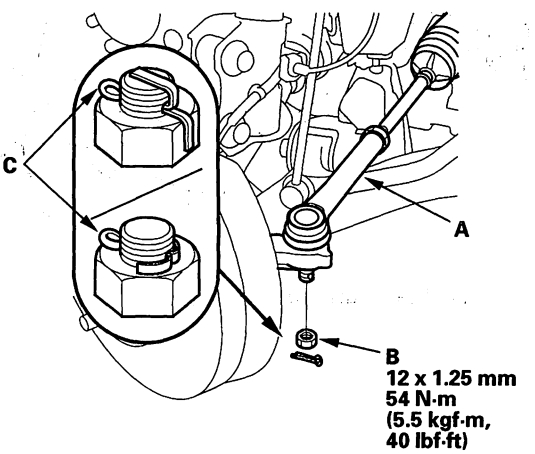


24. Install the new cotter pin (C), and bend it as shown.

25. Center the steering rack within its stroke in steering joint connection.



BACK

Protected by AR

26. With the rack in the straight ahead driving position, cut the wire (A) and slip the lower end of the steering joint onto the pinion shaft (B) in the range shown.

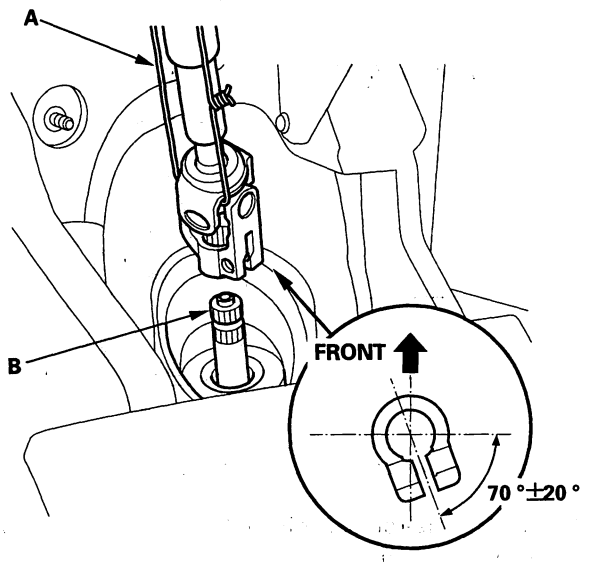


27. Align the bolt hole (A) on the steering joint with the groove (B) around the pinion shaft, then loosely install the joint bolt (C). Be sure that the joint bolt is securely in the groove in the pinion shaft. Pull on the steering joint to make sure that the steering joint is fully seated. Tighten the steering joint bolt to the specified torque.

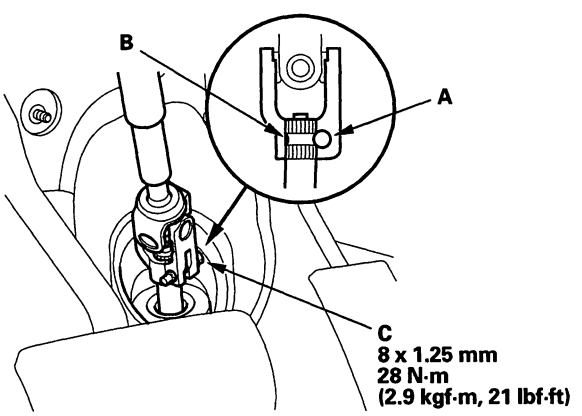


28. Install the steering joint cover (A).

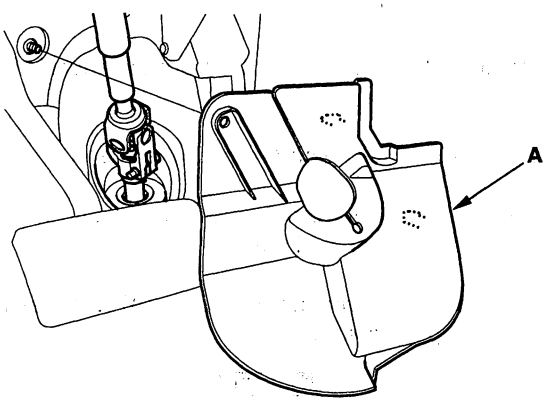


29. Install the driver's dashboard undercover (see page 20-102).

30. Install the front wheel, then set the wheels in the straight ahead position.

31. Install the steering wheel (see page 17-24).

32. Connect the negative battery cable.

- Enter the anti-theft code for the audio and the navigation system (if equipped), then enter the audio presets.
- Set the clock.
- Verify cruise control, audio remote, navigation guide, and turn signal switch operation.
- Make sure the steering wheel is centered.

33. Fill the system with power steering fluid, and bleed air from the system (see page 17-12).

34. After installation, do the following checks:

- Start the engine, allow it to idle, and turn the steering wheel from lock-to-lock several times to warm up to the fluid. Check the gearbox for leaks (see page 17-11).
- Do the front toe inspection (see page 18-7).
- Check the steering wheel spoke angle.
  If steering spoke angles to the right and left are not equal (steering wheel and rack are not centered), correct the engagement of the joint/pinion shaft serrations, then adjust the front toe by turning the tie-rod ends, if necessary.

Protected by AR



## Tie-rod Ball Joint Boot Replacement

**Special Tools Required**
Bushing base 07JAF-SH20330

1. Remove the tie-rod ball joint from the knuckle (see step 11 on page 17-31).

2. Remove the tie-rod end from the rack end.

3. Remove the boot from the tie-rod end, and wipe the old grease off the ball pin.

4. Pack the lower area of the ball pin (A) with fresh multipurpose grease.

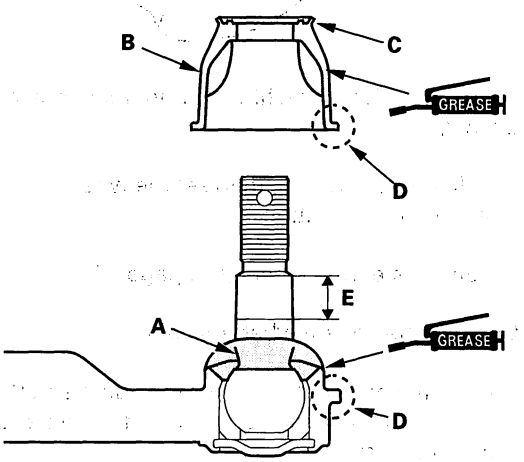


5. Pack the interior of the new boot (B) and lip (C) with fresh multipurpose grease.

   Note these items when installing new grease:
   - Keep grease off the boot mounting area (D) and the tapered section (E) of the ball pin.
   - Do not allow dust, dirt, or other foreign materials to enter the boot.

6. Install the new boot (A) using the bushing base. The boot must not have a gap at the boot installation sections (B). After installing the boot, check the ball pin tapered section for grease contamination, and wipe it if necessary.

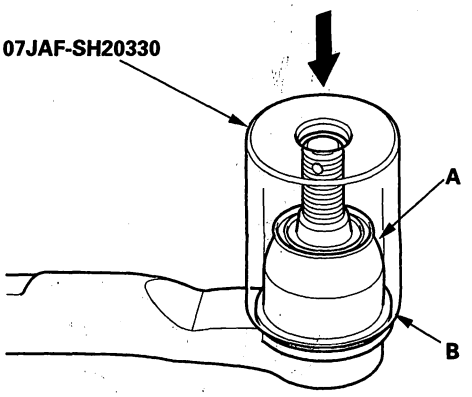


7. Install the tie-rod end to the rack end.

8. Install the tie-rod ball joint to the knuckle (see step 23 on page 17-54).

9. Check the wheel alignment, and adjust it if necessary (see page 18-5).



BACK

Protected by AR

## Gearbox Mount Cushion Replacement

1. Remove the steering gearbox (see page 17-30).

2. Position the 34 mm socket wrench (A) on the flange part of the gearbox housing with a washer (B), 10 x 105 mm flange bolt (C) and the 10 mm nut (D) as shown.

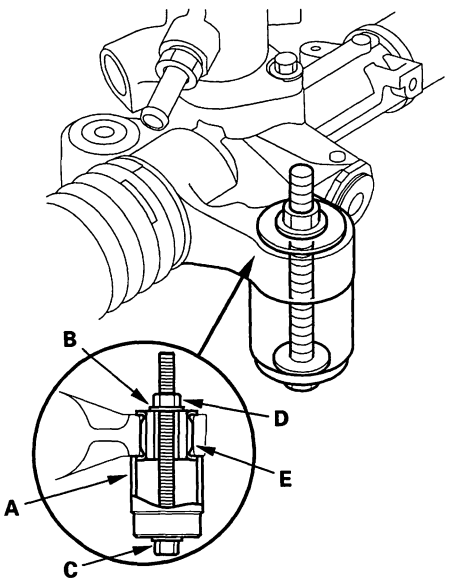


3. Hold the nut with a wrench, and tighten the flange bolt with another wrench. Remove the gearbox mount cushion (E).

4. Apply a mild soap and water solution to the new gearbox mount cushion surface (A), then place it on the gearbox mounting cushion hole.

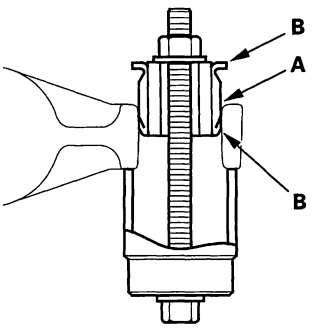


5. Position the 34 mm socket wrench on the flange part of the gearbox housing with a washer, flange bolt, and the nut as shown.

6. Install the gearbox mount cushion by tightening the flange bolt until the mount cushion edges (B) properly fit on the gearbox flange surface.

7. Install the steering gearbox (see page 17-51).

Protected by AR

BACK

Protected by AR

# Suspension

## Front and Rear Suspension


Special Tools ..... 18-2
Component Location Index ..... 18-3
Wheel Alignment ..... 18-5
Wheel Bearing End Play Inspection ..... 18-8
Wheel Runout Inspection ..... 18-9
Wheel Bolt Replacement ..... 18-10
Ball Joint Removal ..... 18-11


## Front Suspension


Knuckle/Hub/Wheel Bearing Replacement ..... 18-12
Lower Ball Joint Replacement ..... 18-18
Ball Joint Boot Replacement ..... 18-19
Lower Arm Removal/Installation ..... 18-19
Stabilizer Link Removal/Installation ..... 18-22
Stabilizer Bar Replacement ..... 18-22
Damper/Spring Removal and Installation ..... 18-23
Damper/Spring Disassembly,
Inspection, and Reassembly ..... 18-27


## Rear Suspension


Knuckle/Hub Bearing Unit Replacement ..... 18-31
Upper Arm Removal/Installation ..... 18-36
Lower Arm A Removal/Installation ..... 18-38
Lower Arm B Removal and Installation ..... 18-39
Trailing Arm Removal/Installation ..... 18-41
Stabilizer Link Removal/Installation ..... 18-42
Stabilizer Bar Replacement ..... 18-42
Damper Replacement ..... 18-43
Spring Replacement ..... 18-47

**TPMS (Tire Pressure Monitoring System) ..... 18-51**

Protected by AR



## Special Tools

| Ref. No. | Tool Number | Description | Qty |
|---|---|---|---|
| ① | 07AAA-SVAA100 | Strut Nut Adapter | 1 |
| ② | 07GAF-SD40100 | Hub Dis/Assembly Tool | 1 |
| ③ | 07GAF-SE00200 | Attachment, 40 mm | 1 |
| ④ | 07MAC-SL0A102 | Ball Joint Remover, 32 mm | 1 |
| ⑤ | 07MAC-SL0A202 | Ball Joint Remover, 28 mm | 1 |
| ⑥ | 071AF-S3VA000 | Ball Joint Thread Protector, 14 mm | 1 |
| ⑦ | 07746-0010600 | Attachment, 72 x 75 mm | 1 |
| ⑧ | 07749-0010000 | Driver | 1 |
| ⑨ | 07948-SB00101 | Attachment, 96 mm | 1 |
| ⑩ | 07965-SD90100 | Support Base | 1 |

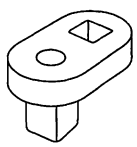
①

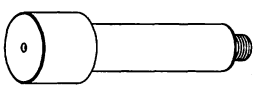
②

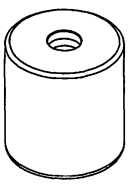
③

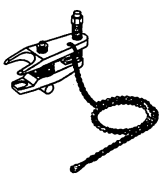
④, ⑤

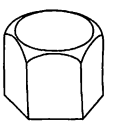
⑥

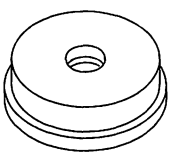
⑦

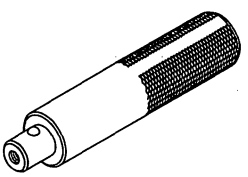
⑧

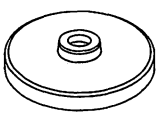
⑨

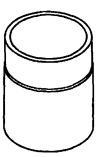
⑩



BACK

Protected by AR

# Component Location Index

**Front Suspension**

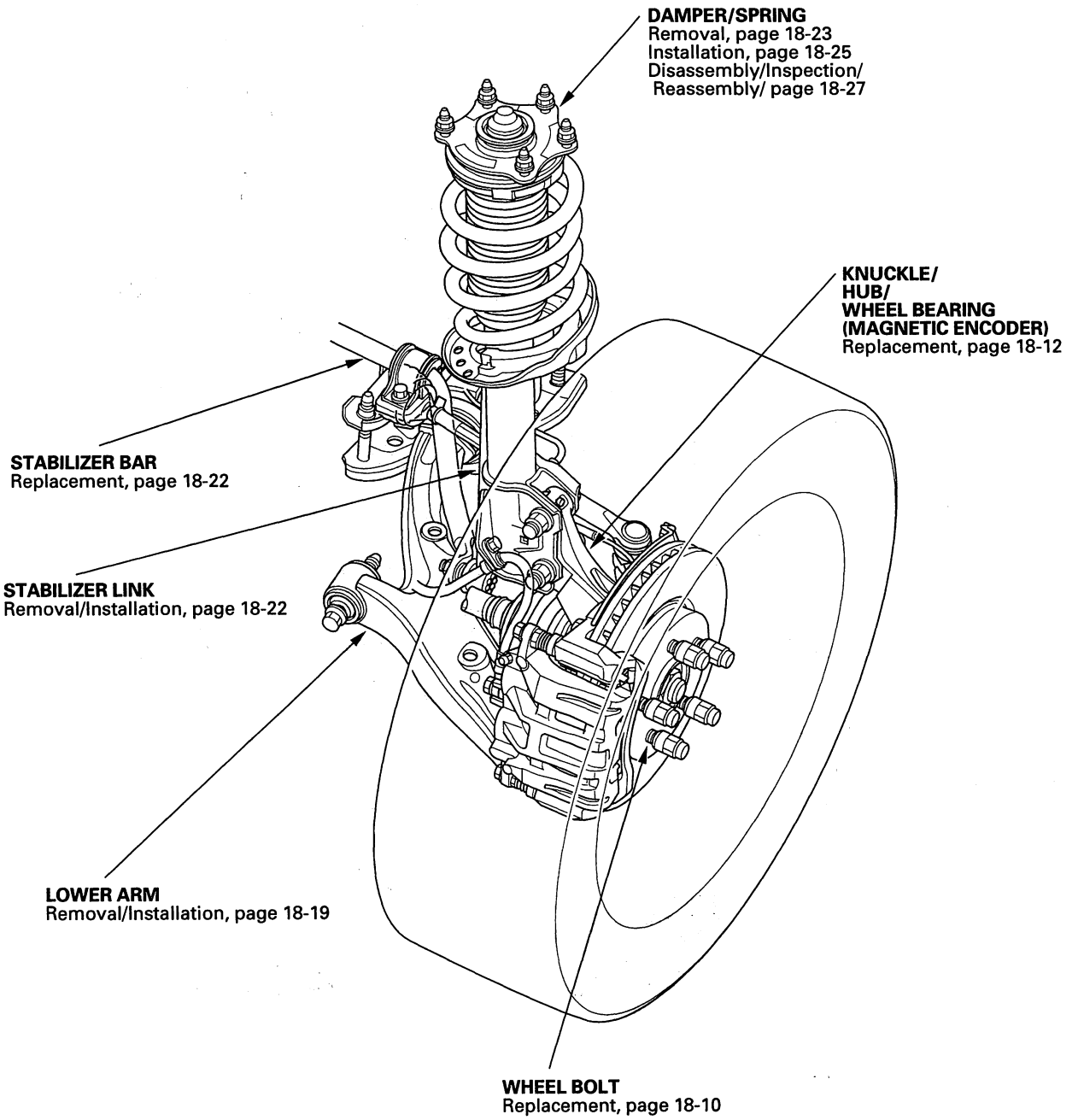


(cont'd)

Protected by AR



## Component Location Index (cont'd)

**Rear Suspension**

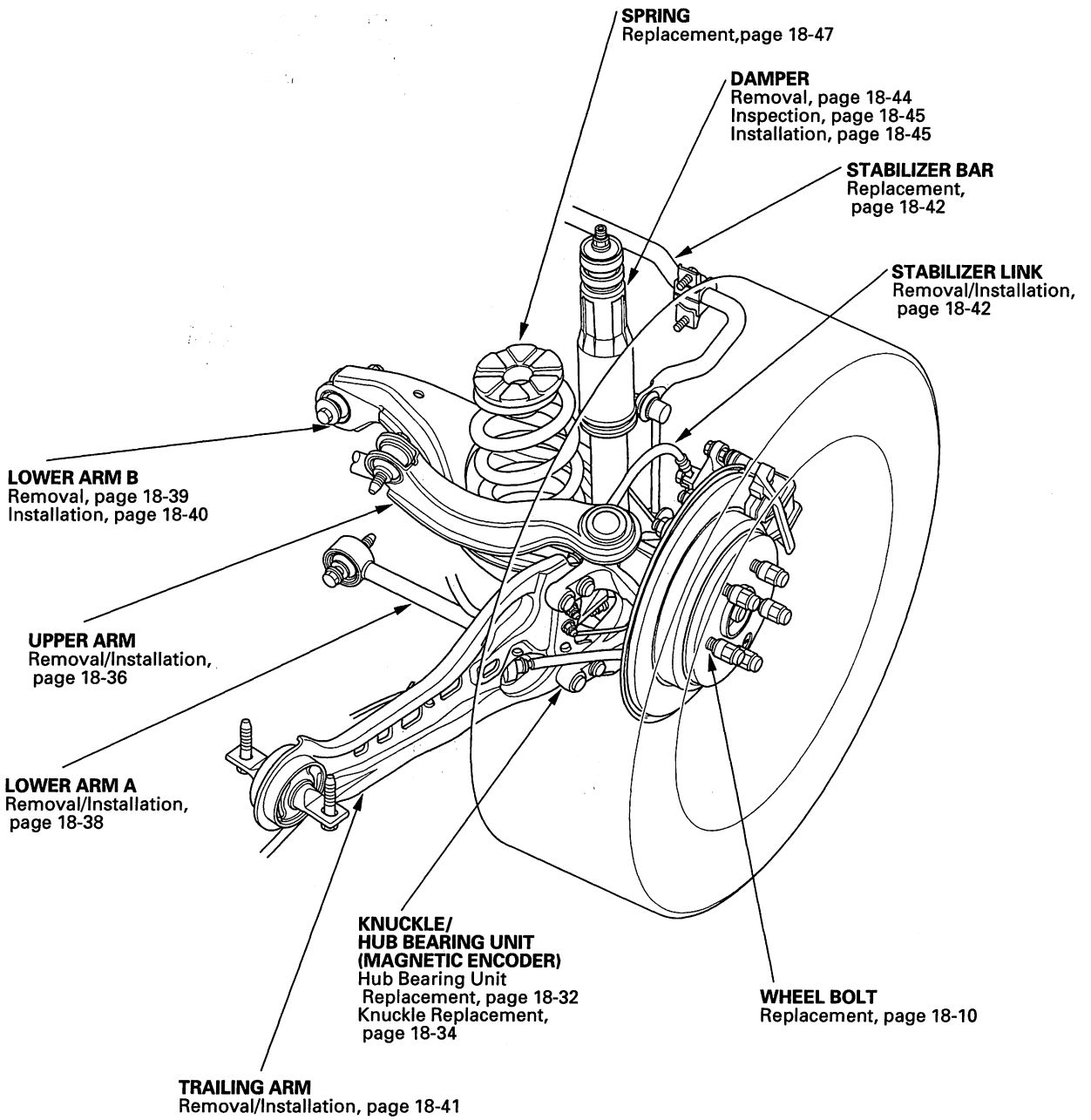




BACK

Protected by AR

# Wheel Alignment

The suspension can be adjusted for front camber, front toe, and rear toe. However, each of these adjustments are related to each other. For example, when you adjust camber, the toe will change. Therefore, you must adjust the front wheel alignment whenever you adjust camber or toe.

## Pre-Alignment Checks

For proper inspection and adjustment of the wheel alignment, do these checks:

1. Release the parking brake to avoid an incorrect measurement.

2. Make sure the suspension is not modified.

3. Check the tire size and tire pressure.

   **Tire size:**
   **Front/Rear: P235/55R18 99V M+S**

   **Tire pressure:**
   **Front/Rear: 220 kPa (2.2 kgf/cm², 32 psi), cold**

4. Check the runout of the wheels and tires (see page 18-9).

5. Check the suspension ball joints. (Hold a tire with your hands, and move it up and down and right and left to check for wobbling.)

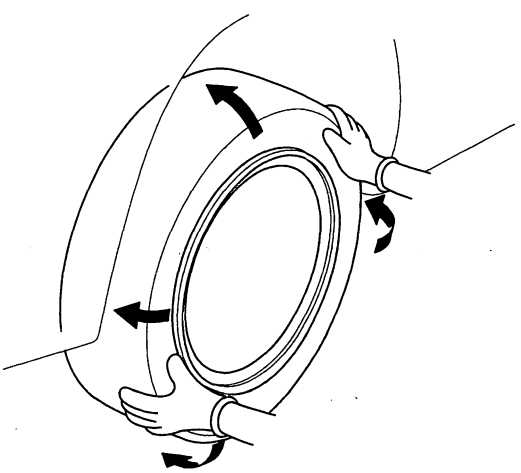

6. Bounce the vehicle up and down several times to settle the suspension.

## Caster Inspection

Use commercially available computerized four wheel alignment equipment to measure wheel alignment (caster, camber, toe, and turning angle). Follow the equipment manufacturer's instructions.

Check the caster angle.

**Caster angle: 2°57′±1°**

- If the measurement is within specifications, measure the camber angle.
- If the measurement is not within specifications, check for bent or damaged suspension components.

## Camber Inspection

Use commercially available computerized four wheel alignment equipment to measure wheel alignment (caster, camber, toe, and turning angle). Follow the equipment manufacturer's instructions.

Check the camber angle.

**Camber angle:**
**Front: 0°10′±45′**
**(Maximum difference between the front right and left side: 0°30′)**
**Rear: −1°00′±45′**

- If the measurement for the front camber is outside the specification, go to front camber adjustment.
- If the measurement for the rear camber is outside the specification, check for bent or damaged suspension components.

(cont'd)

Protected by AR



## Wheel Alignment (cont'd)

### Front Camber Adjustment

The front camber can be adjusted by exchanging one or both of the damper pinch bolts with a smaller diameter adjusting bolt. The difference between the adjusting bolt diameter and the pinch bolt hole diameter allows for a small range of adjustment.

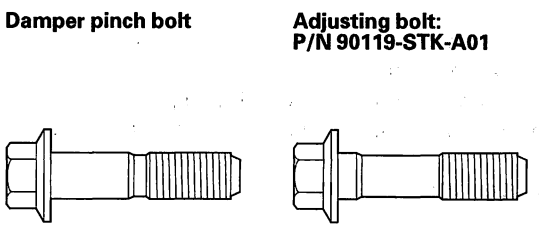


1. Raise the front of the vehicle, and support it with safety stands in the proper locations (see page 1-7).
2. Remove the front wheels.
3. Loosen the flange bolts (A), and adjust the camber by moving the bottom of the damper within the range of the damper pinch bolt free play.

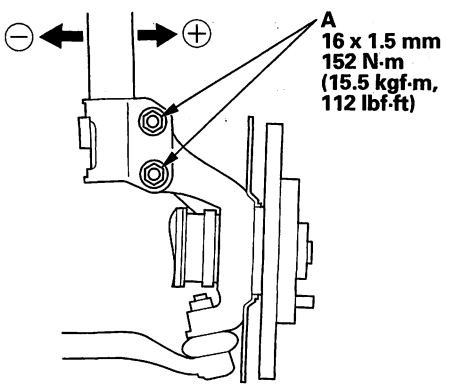


4. Tighten the damper pinch bolts to the specified torque.
5. Reinstall the front wheels. Lower the front of the vehicle to the ground, and bounce the front of the vehicle up and down several times to settle the suspension.
6. Measure the camber angle.
   - If the measurement is within specification, measure the toe-in.
   - If the measurement is not within specification, go to step 7.
7. Raise the front of the vehicle, and support it with safety stands in the proper locations (see page 1-7).
8. Remove the front wheels.
9. Replace the damper pinch bolts with the adjusting bolts (A), and adjust the camber angle.

   NOTE:
   - The camber angle can be adjusted up to ±25 ′ (center of tolerance) by replacing one damper pinch bolt with the adjusting bolt.
   - The camber angle can be adjusted up to 50 ′ by replacing both damper pinch bolts with the adjusting bolts.

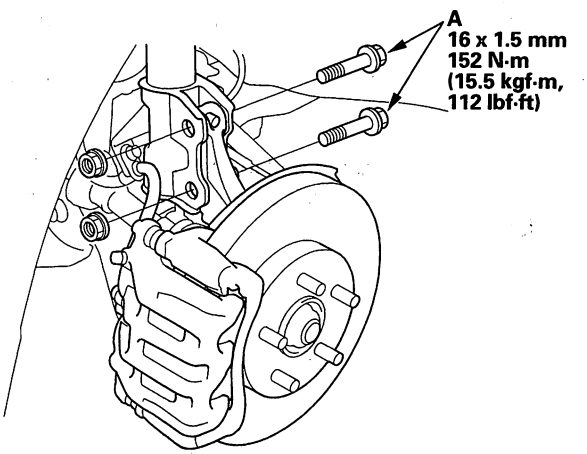


10. Tighten the adjusting bolts to the specified torque value.
11. Install the front wheels.
12. Lower the vehicle to the ground, and bounce the front of the vehicle up and down several times to settle the suspension.
13. Measure the camber angle. If the camber angle is not within specification, repeat steps 7 through 12 to readjust the camber angle. If the camber measurement is correct, measure toe-in, and adjust it if necessary.



BACK

Protected by AR

## Front Toe Inspection/Adjustment

Use commercially available computerized four wheel alignment equipment to measure wheel alignment (caster, camber, toe, and turning angle). Follow the equipment manufacturer's instructions.

1. Center the steering wheel spokes, and install a steering wheel holder tool.

2. Check the toe with the wheels pointed straight ahead.

   **Front toe-in: 0±2 mm (0±0.08 in.)**

   - If adjustment is required, go to step 3.
   - If no adjustment is required, go to rear toe inspection/adjustment.

3. Loosen the tie-rod locknuts (A) while holding the flat surface sections (B) of the tie-rod end with a wrench, and turn both tie-rods (C) until the front toe is within specifications.

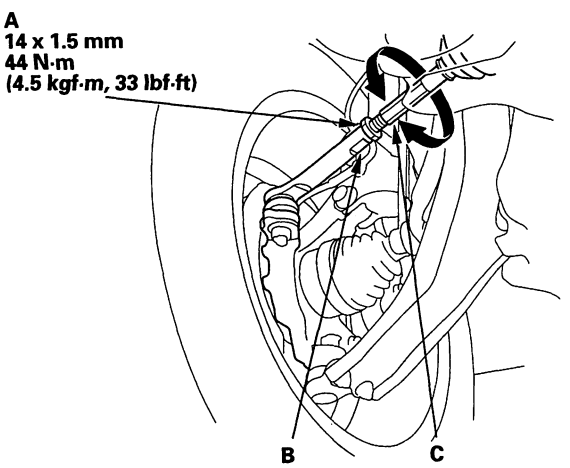


4. After adjusting, tighten the tie-rod locknuts. Reposition the rack-end boot if it is twisted or displaced.

5. Go to rear toe inspection/adjustment.

## Rear Toe Inspection/Adjustment

Use commercially available computerized four wheel alignment equipment to measure wheel alignment (caster, camber, toe, and turning angle). Follow the equipment manufacturer's instructions.

1. Release the parking brake to avoid an incorrect measurement.

2. Check the toe.

   **Rear toe-in: 2.5±2 mm (0.10±0.08 in.)**

   - If adjustment is required, go to step 3.
   - If no adjustment is required, remove the alignment equipment.

3. Hold the adjusting bolt (A) on lower arm B, and remove the self-locking nut (C).

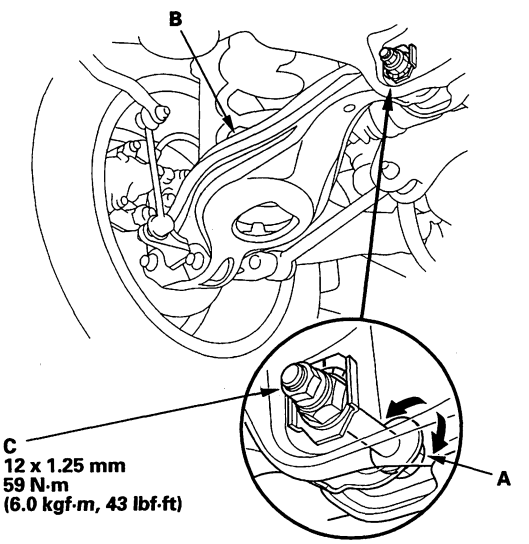


4. Replace the self-locking nut with a new one, and lightly tighten it.

   NOTE:
   - Always use a new self-locking nut whenever it has been loosened.
   - Reassemble the adjusting bolt and camplate with the eccentric facing up.

5. Adjust the rear toe by turning the adjusting bolt until the toe is correct.

6. Tighten the new self-locking nut while holding the adjusting bolt.

(cont'd)

Protected by AR



## Wheel Alignment (cont'd)

### Turning Angle Inspection

Use commercially available computerized four wheel alignment equipment to measure wheel alignment (caster, camber, toe, and turning angle). Follow the equipment manufacturer's instructions.

1. Turn the wheel right and left while applying the brake, and measure the turning angle of both wheels.

   **Turning angle:**
   **Inward wheel: 35 °24 ′±2 °**
   **Outward wheel: 30 °30 ′ (reference)**

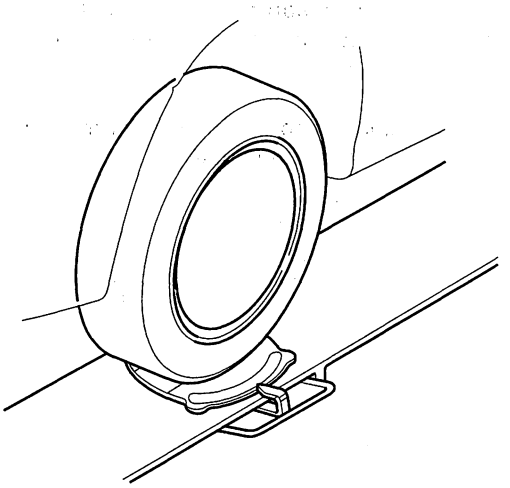

2. If the turning angle is not within the specifications, check for bent or damaged suspension components.

## Wheel Bearing End Play Inspection

1. Raise the vehicle, and support it with safety stands in the proper locations (see page 1-7).

2. Remove the wheels.

3. Install suitable flat washers (A) and the wheel nuts. Tighten the nuts to the specified torque to hold the brake disc or disc/drum securely against the hub.

   **Front**

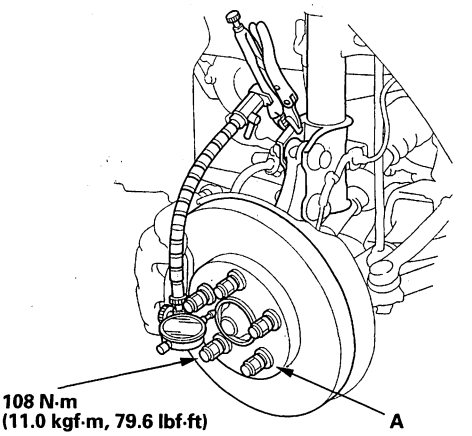


   **Rear**

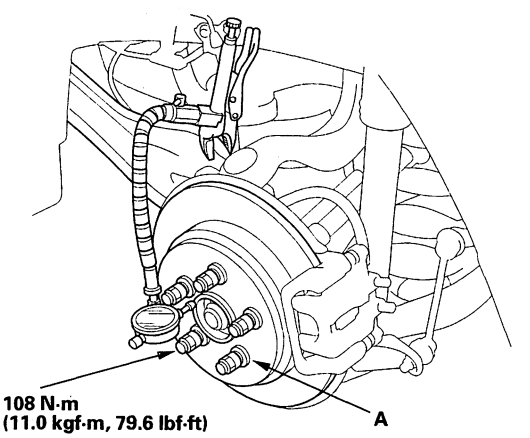


4. Attach the dial gauge. Place the dial gauge against the hub flange.

5. Measure the bearing end play by moving the disc or disc/drum inward and outward.

   **Front/Rear:**
   **Standard: 0—0.05 mm (0—0.002 in.)**

6. If the bearing end play measurement is more than the standard, replace the wheel bearing or hub bearing unit.



BACK

Protected by AR

## Wheel Runout Inspection

NOTE: When measuring the front wheel runout, turn the back side of the wheel slowly by hand.

1. Raise the vehicle, and support it with safety stands in the proper locations (see page 1-7).

2. Check for bent or deformed wheels.

3. Set up the dial gauge as shown, and measure axial runout by turning the wheel.

   **Front and rear wheel axial runout:**
   **Standard: 0—0.7 mm (0—0.03 in.)**
   **Service limit: 2.0 mm (0.08 in.)**

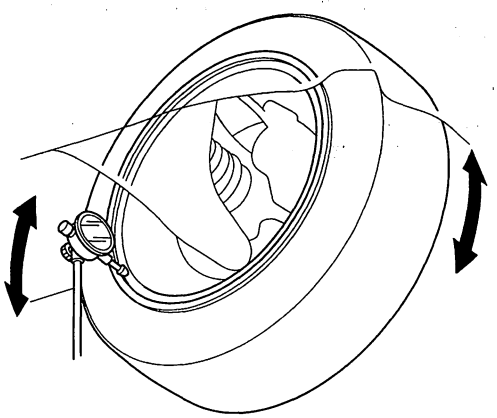

4. Reset the dial gauge to the position shown, and measure the radial runout.

   **Front and rear wheel radial runout:**
   **Standard: 0—0.7 mm (0—0.03 in.)**
   **Service limit: 1.5 mm (0.06 in.)**

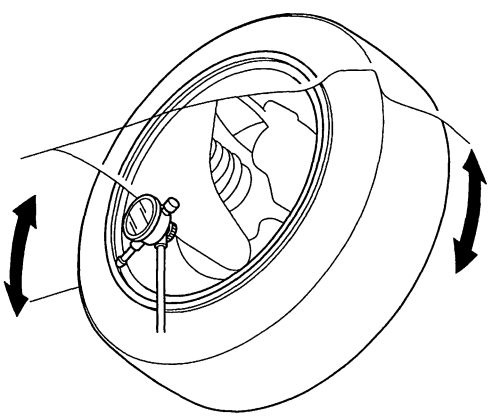

5. If the wheel runout is not within the specification, check the wheel bearing end play (see page 18-8), and make sure the mating surfaces on the brake disc or disc/drum and the inside of the wheel are clean.

6. If the bearing end play is within the specification but the wheel runout is more than the service limit, replace the wheel.

BACK

Protected by AR



## Wheel Bolt Replacement

NOTICE
- Do not use a hammer or air or electric impact tools to remove and install the wheel bolts.
- Be careful not to damage the threads of the wheel bolts.

1. Remove the front hub or rear hub bearing unit: front (see page 18-13), rear (see page 18-32).

2. Separate the wheel bolt (A) from the hub (B) using a hydraulic press. Support the hub with hydraulic press attachments (C) or equivalent tools.

   NOTE:
   - Before installing the new wheel bolt, clean the mating surface on the bolt and the hub.
   - The illustration shows a front hub.

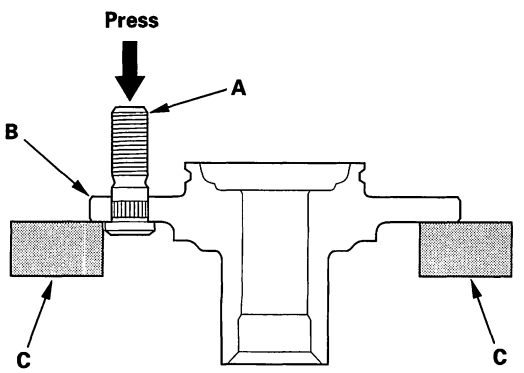


3. Insert the new wheel bolt into the hub while aligning the splined surfaces on the hub hole with the wheel bolt.

   NOTE:
   - Degrease all around the wheel bolt and the threaded section of the nut.
   - Make sure the wheel bolt is installed vertically in relation to the hub disc surface.

4. Press the wheel bolt using a hydraulic press. Support the hub with hydraulic press attachments or equivalent tools.

5. Install the front hub or rear hub bearing unit: front (see page 18-13), rear (see page 18-32).

   NOTE: If you can not tighten the wheel nut to the specified torque value when installing the wheel, replace the front hub or rear hub bearing unit as an assembly.



BACK

Protected by AR

## Ball Joint Removal

**Special Tools Required**
- Ball joint remover, 32 mm 07MAC-SL0A102
- Ball joint remover, 28 mm 07MAC-SL0A202

**NOTICE**
Always use a ball joint remover to disconnect a ball joint. Do not strike the housing or any other part of the ball joint connection to disconnect it.

### 07MAC-SL0A102 or 07MAC-SL0A202

1. Install a hex nut (A) or ball joint thread protector onto the threads of the ball joint (B). Make sure the nut is flush with the ball joint pin end to prevent damage to the thread end of the ball joint pin.

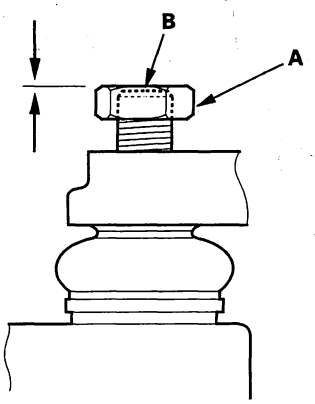


2. Apply grease to the ball joint remover on the areas shown (A). This will ease installation of the tool and prevent damage to the pressure bolt (B) threads.

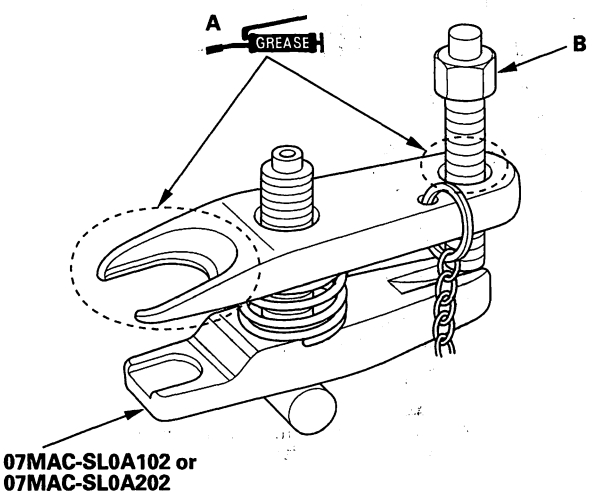


3. Loosen the pressure bolt (A), and install the ball joint remover as shown. Insert the jaws carefully, making sure not to damage the ball joint boot. Adjust the jaw spacing by turning the adjusting bolt (B).

   NOTE: Fasten the safety chain (C) securely to a suspension arm or the subframe (D). Do not fasten it to a brake line or wire harness.

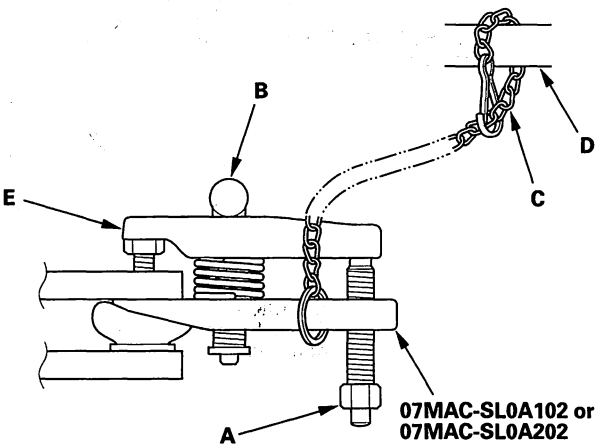


4. After adjusting the adjusting bolt, make sure the head of the adjusting bolt is in the position shown to allow the jaw (E) to pivot.

5. With a wrench, tighten the pressure bolt until the ball joint pin pops loose from the ball joint pin hole. If necessary, apply penetrating type lubricant to loosen the ball joint pin.

   NOTE: Do not use pneumatic or electric tools on the pressure bolt.

6. Remove the ball joint remover, then remove the nut from the end of the ball joint pin, and pull the ball joint out of the ball joint pin hole. Inspect the ball joint boot, and replace it if damaged.

Protected by AR



## Knuckle/Hub/Wheel Bearing Replacement

### Exploded View

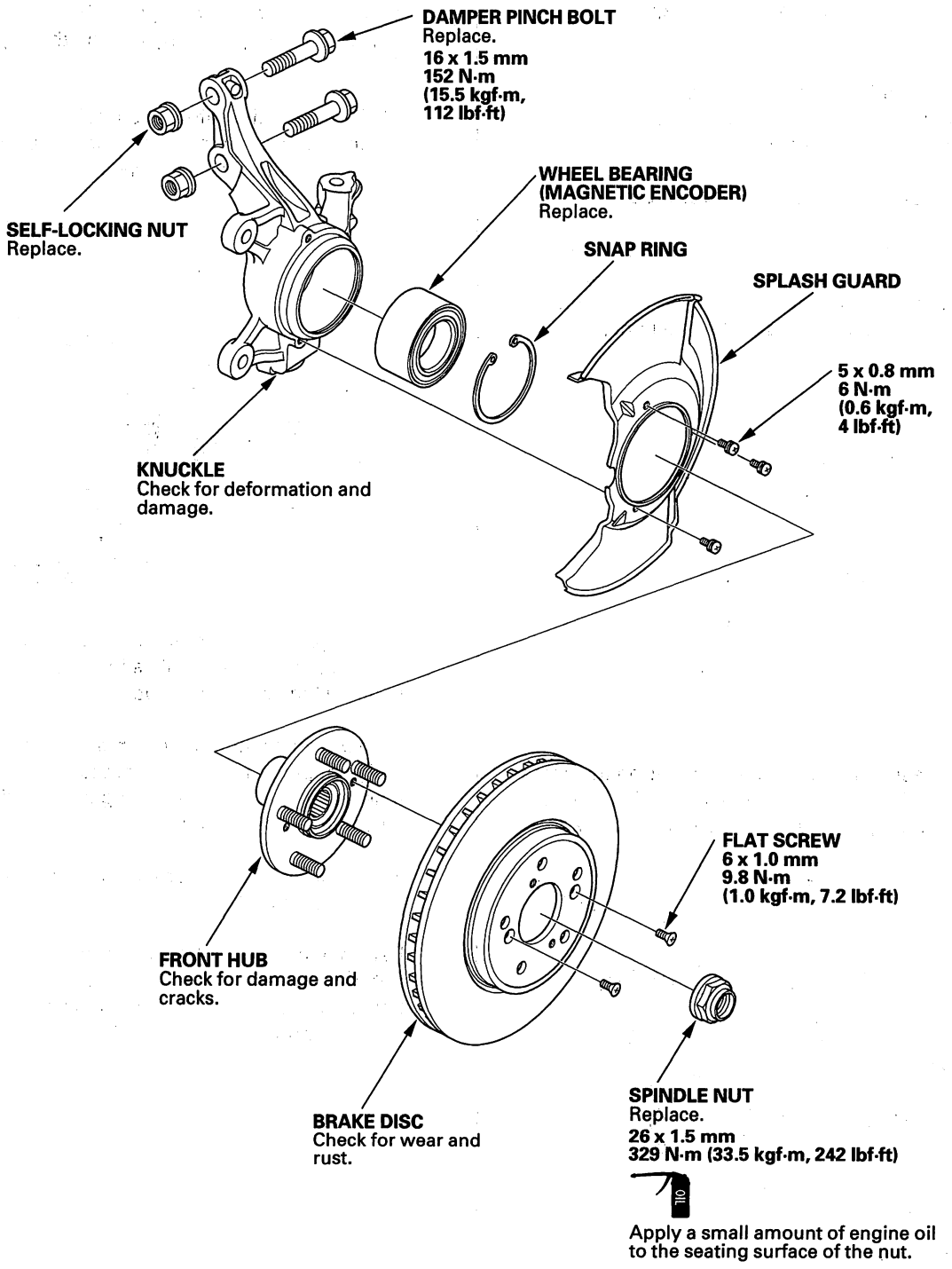




BACK

Protected by AR

**Special Tools Required**
- Hub dis/assembly tool 07GAF-SD40100
- Ball joint remover, 32 mm 07MAC-SL0A102
- Ball joint remover, 28 mm 07MAC-SL0A202
- Ball joint thread protector, 14 mm 071AF-S3VA000
- Attachment, 72 x 75 mm 07746-0010600
- Driver 07749-0010000
- Attachment, 96 mm 07948-SB00101
- Support base 07965-SD90100

## Knuckle/Hub Replacement

1. Raise the front of the vehicle, and support it with safety stands in the proper locations (see page 1-7).

2. Remove the wheel nuts (A) and the front wheel.

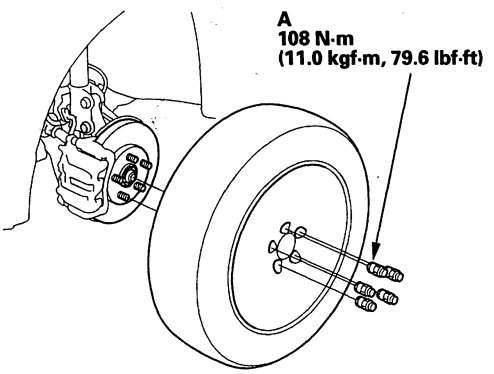


3. Remove the brake hose mounting bolt (A).

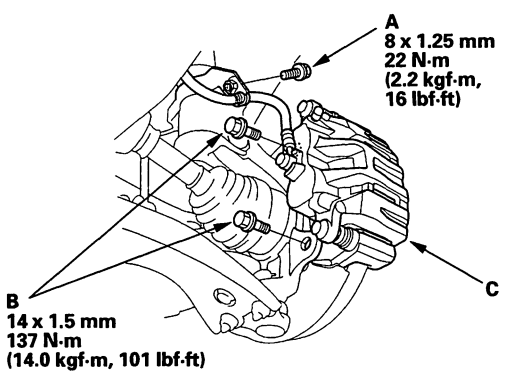


4. Remove the brake caliper bracket mounting bolts (B), and remove the caliper assembly (C) from the knuckle. To prevent damage to the caliper assembly or brake hose, use a short piece of wire to hang the caliper assembly from the undercarriage. Do not twist the brake hose excessively.

5. Remove the wheel sensor (A) from the knuckle (B). Do not disconnect the wheel sensor connector.

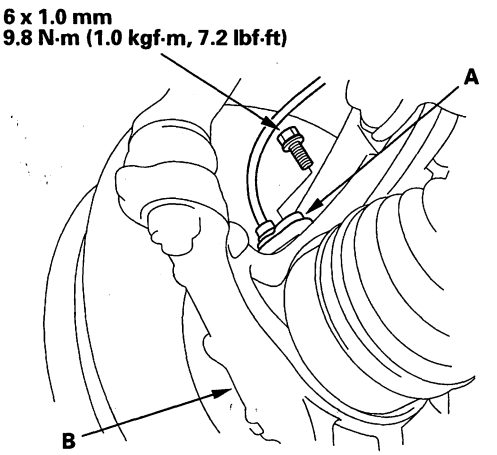


6. Raise the stake (A), then remove the spindle nut (B).

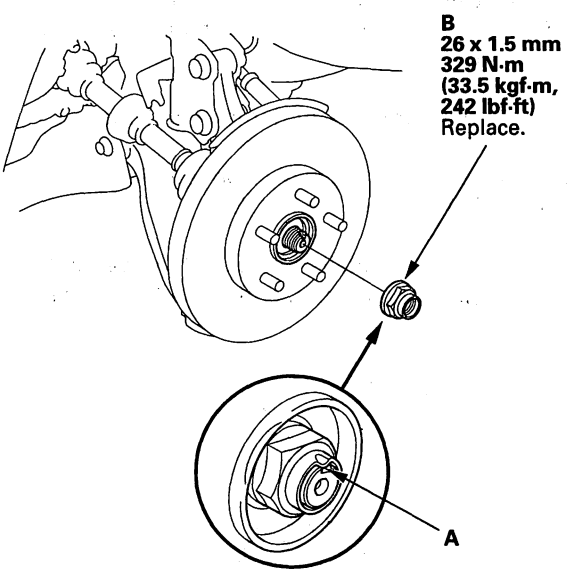


(cont'd)

Protected by AR



## Knuckle/Hub/Wheel Bearing Replacement (cont'd)

7. Remove the 6 mm brake disc flat screws (A).

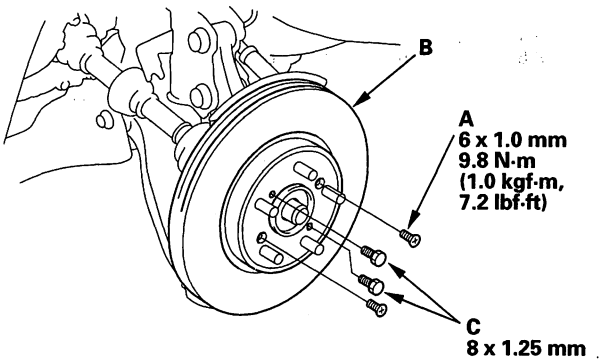


8. Remove the brake disc (B) from the hub.

   NOTE: If the brake disc has clung to the hub. Screw two 8 x 1.25 mm bolts (C) into the brake disc to push it away from the hub. Turn each bolt 90 degrees at a time to prevent the brake disc from binding.

9. Check the front hub for damage and cracks.

10. Remove the cotter pin (A) from the tie-rod end ball joint, then remove the nut (B).

    NOTE: During installation, install the new cotter pin after tightening the nut, and bend its end as shown.

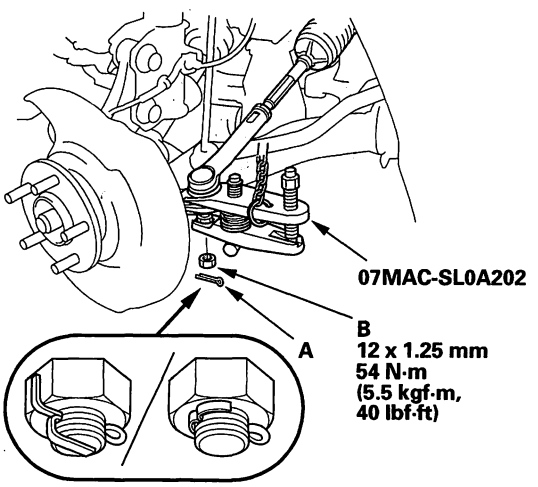


11. Disconnect the tie-rod ball joint from the knuckle using the ball joint remover (see page 18-11).

12. Remove the lock pin (A) from the lower ball joint (B) then remove the castle nut (C).

    NOTE: During installation, install the lock pin after tightening the new castle nut.

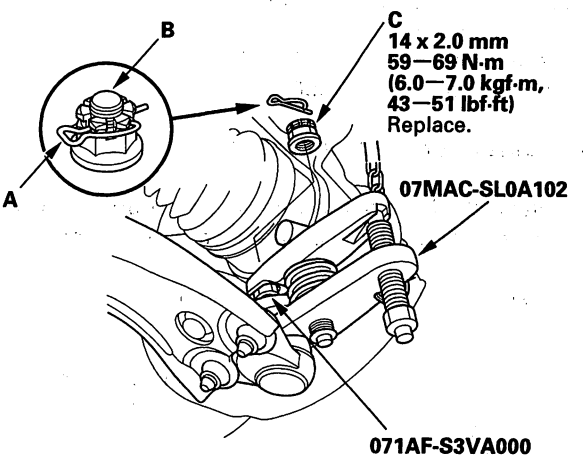


13. Disconnect the lower ball joint from the knuckle.



BACK

Protected by AR

14. Remove the damper pinch bolts (A) and the self-locking nuts (B) from the damper.

    NOTE: During installation, install the new damper pinch bolts and the new self-locking nuts.

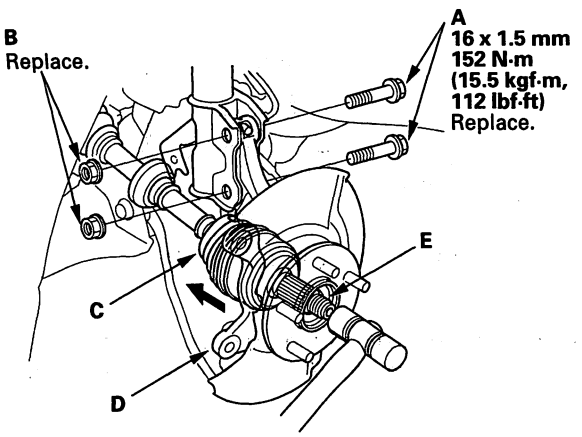


15. Remove the driveshaft outboard joint (C) from the knuckle (D) by tapping the driveshaft end (E) with a plastic hammer while drawing the hub outward, then remove the knuckle.

    NOTE:
    - Do not pull the driveshaft end outward. The inner driveshaft joint may come apart.
    - During installation, apply grease to the mating surface of the wheel bearing and the driveshaft outboard joint (see page 16-19).

16. Install the knuckle/hub in the reverse order of removal, and note these items:

    - Be careful not to damage the ball joint boot when installing the knuckle.
    - Before connecting the lower ball joint to the knuckle, degrease the threaded section and tapered portion of the ball joint pin, the knuckle connecting hole, the threaded section, and mating surface of the castle nut.
    - First install all the components, and lightly tighten the bolts and nuts, then raise the suspension to load it with the vehicle's weight before fully tightening to the specified torque values.
    - Tighten all mounting hardware to the specified torque values.
    - Torque the castle nut to the lower torque specification, then tighten it only far enough to align the slot with the ball joint pin hole. Do not align the castle nut by loosening it.
    - Use a new spindle nut during reassembly.
    - Before installing the spindle nut, apply a small amount of engine oil to the seating surface of the nut. After tightening, use a drift to stake the spindle nut shoulder against the driveshaft.
    - Before installing the brake disc, clean the mating surface of the front hub and the inside of the brake disc.
    - Before installing the wheel, clean the mating surface of the brake disc and the inside of the wheel.
    - Check the wheel alignment, and adjust it if necessary (see page 18-5).

(cont'd)

Protected by AR



## Knuckle/Hub/Wheel Bearing Replacement (cont'd)

### Wheel Bearing Replacement

1. Separate the hub (A) from the knuckle (B) using the hub dis/assembly tool and a hydraulic press. Support the knuckle with press blocks (C) from the hydraulic press or equivalent tool. Be careful not to deform the splash guard. Hold onto the hub to keep it from falling when pressed clear.

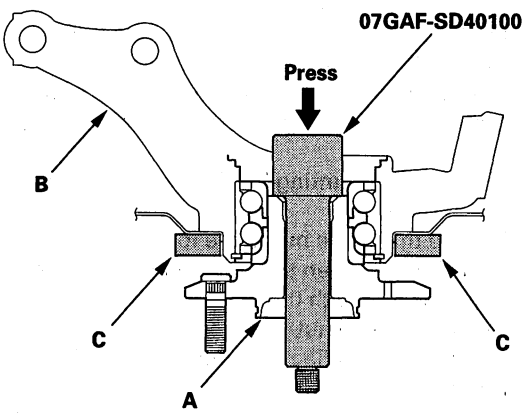


2. Press the wheel bearing inner race (A) off of the hub (B) using the hub dis/assembly tool, a commercially available bearing separator (C), and a press.

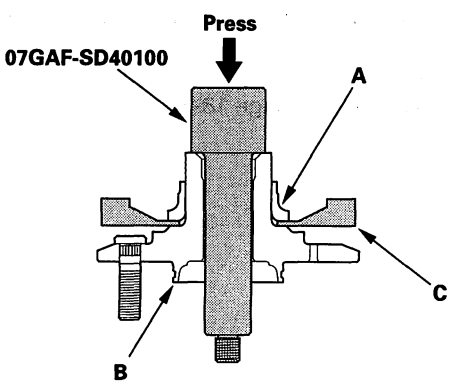


3. Remove the splash guard (A) and the snap ring (B) from the knuckle (C).

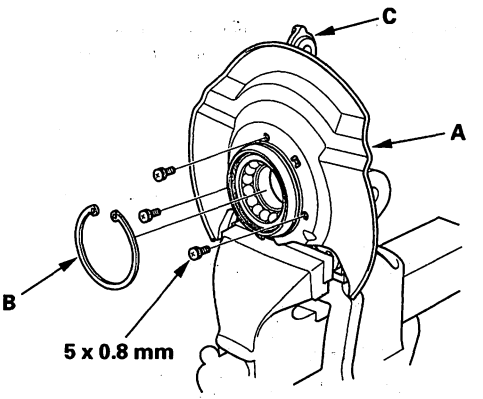


4. Press the wheel bearing (A) out of the knuckle (B) using the driver, the 72 x 75 mm attachment and a press.

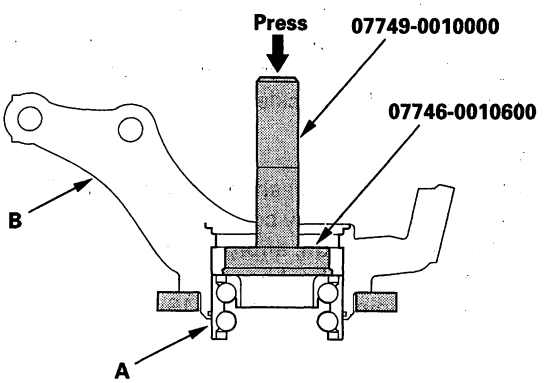




BACK

Protected by AR

5. Wash the knuckle and hub thoroughly in high flash-point solvent before reassembly.

6. Press a new wheel bearing (A) into the knuckle (B) using the old bearing (C), a steel plate (D), the 96 mm attachment, the support base, and a press.

   NOTE:
   - Install the wheel bearing with the wheel sensor magnetic encoder (E) (brown color), toward the inside of the knuckle.
   - Remove any oil, grease, dust, metal debris, and other foreign material from the encoder surface.
   - Keep all magnetic tools away from the encoder surface.
   - Be careful not to damage the encoder surface when you insert the wheel bearing.

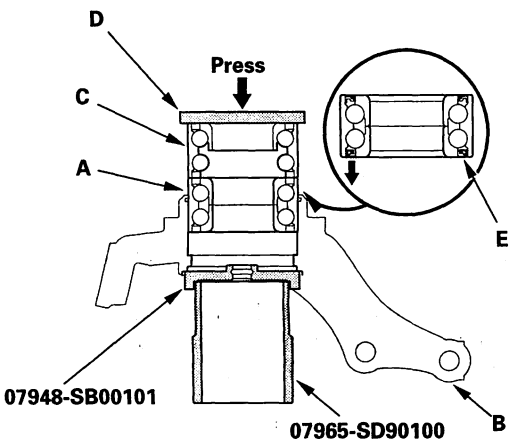


7. Install the snap ring (A) securely in the knuckle (B).

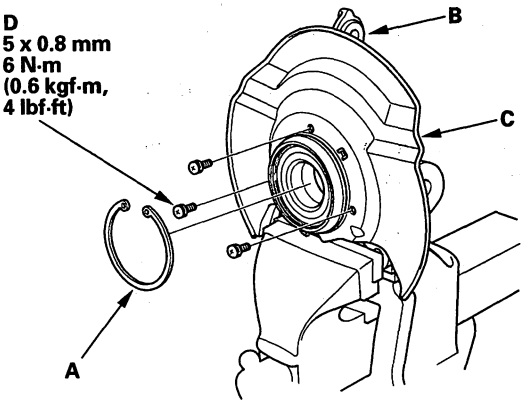


8. Install the splash guard (C), and tighten the screws (D) to the specified torque value.

9. Install the hub (A) onto the knuckle (B) using the driver, the 72 x 75 mm attachment, the support base, and a hydraulic press. Be careful not to distort the splash guard (C).

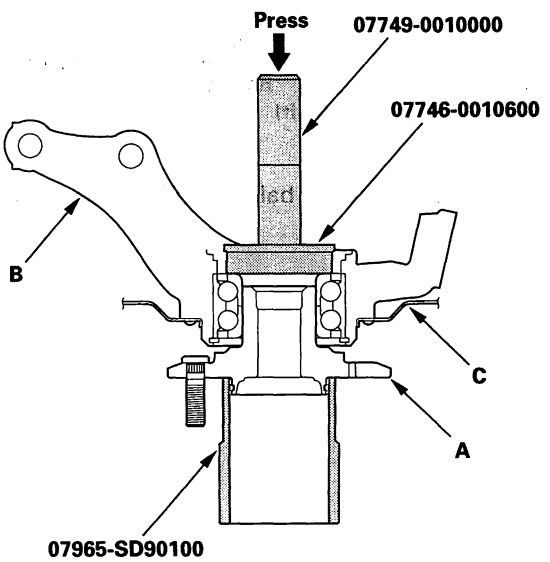

Protected by AR



## Lower Ball Joint Replacement

**Special Tools Required**
- Ball joint remover, 32 mm 07MAC-SL0A102
- Ball joint thread protector, 14 mm 071AF-S3VA000

1. Remove the front wheel (see page 18-13).

2. Remove the flange bolt and flange nuts from the lower arm (A).

   NOTE: During installation, loosely install the new flange bolt and new flange nuts. Then tighten them in the following order; the nut on the front (B), the nut on the rear (C), then the bolt (D).

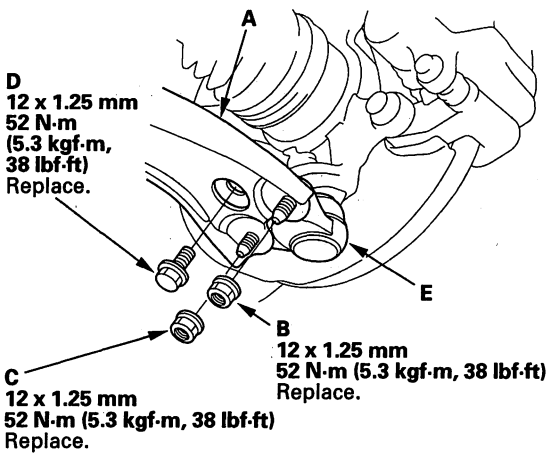


3. Disconnect the lower ball joint (E) from the lower arm.

4. Remove the lock pin (A) from the lower ball joint (B) them remove the castle nut (C).

   NOTE: During installation, install the lock pin after tightening the new castle nut.

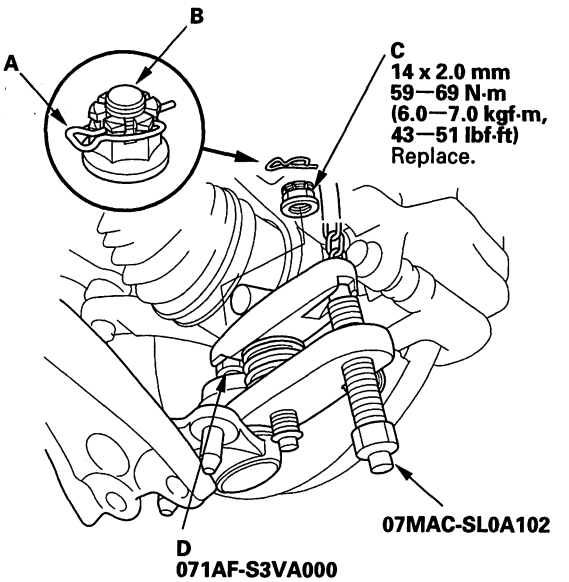


5. Install the ball joint thread protector (D).

6. Disconnect the lower ball joint from the knuckle using the ball joint remover (see page 18-11), then remove the lower ball joint.

7. Install the lower ball joint in the reverse order of removal, and note these items:

   - First install all the components, and lightly tighten the bolts and nuts, then tighten the lower ball joint to the lower arm to the specified torque. Raise the suspension to load it with the vehicle's weight before fully tightening the lower ball joint to the knuckle to the specified torque values.
   - Tighten all mounting hardware to the specified torque values.
   - Torque the castle nut to the lower torque specification, then tighten it only far enough to align the slot with the ball joint pin hole. Do not align the castle nut by loosening it.
   - Before installing the wheel, clean the mating surface of the brake disc and the inside of the wheel.
   - Check the wheel alignment, and adjust it if necessary (see page 18-5).



BACK

Protected by AR

## Ball Joint Boot Replacement

**Special Tools Required**
Attachment, 40 mm 07GAF-SE00200

1. Remove lower ball joint (see page 18-18).
2. Remove the boot.
3. Pack the interior and lip (A) of a new boot with grease. Keep the grease off of the boot-to-lower ball housing mating surfaces (B).

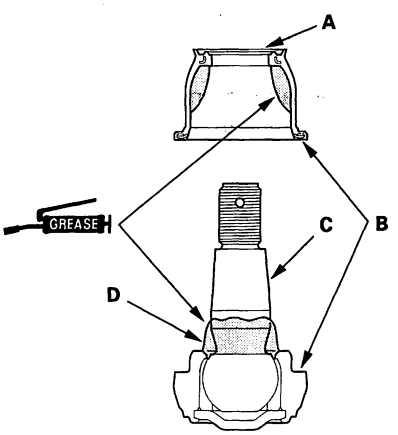


4. Wipe the grease off the tapered portion of the pin (C), and pack fresh grease into the base (D). Do not let dirt or other foreign materials get into the boot.
5. Install the boot on the ball joint, then squeeze it gently to force out any air.
6. Press the boot with the attachment (40 mm) until the bottom seats on the lower ball housing all the way around.

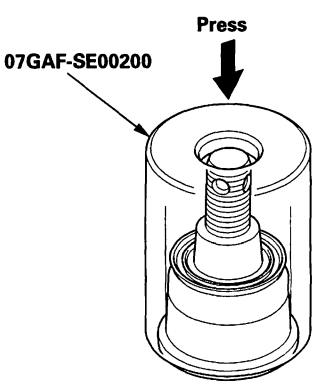


7. After installing the boot, wipe any grease off the exposed portion of the ball joint pin.
8. Install lower ball joint (see page 18-18).

## Lower Arm Removal/Installation

### Removal/Installation

1. Raise the front of the vehicle, and support it with safety stands in the proper locations (see page 1-7).
2. Remove the front wheel.
3. Remove the flange bolts (A) and the bushing holder (B).

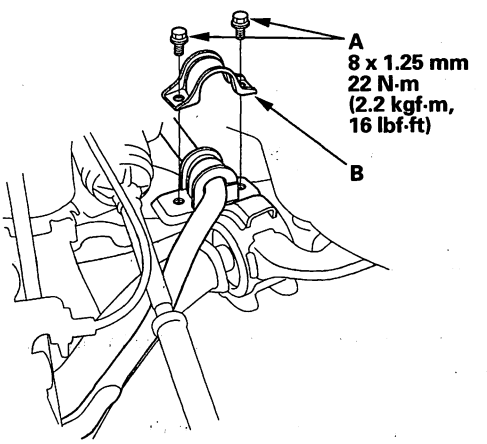


(cont'd)

Protected by AR



## Lower Arm Removal/Installation (cont'd)

4. Remove the flange bolt and flange nuts from the lower arm (A).

   NOTE: During installation, loosely install the new flange bolt and new flange nuts. Then tighten them in the following order; the nut on the front (B), the nut on the rear (C), then the bolt (D).

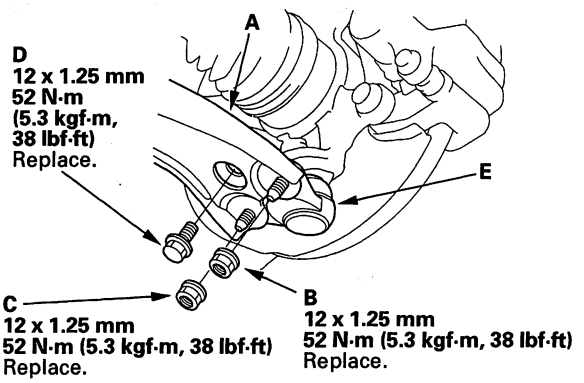


5. Disconnect the lower ball joint (E) from the lower arm.

6. Remove the lower arm mounting bolt (A).

   NOTE: During installation, install a new mounting bolt.

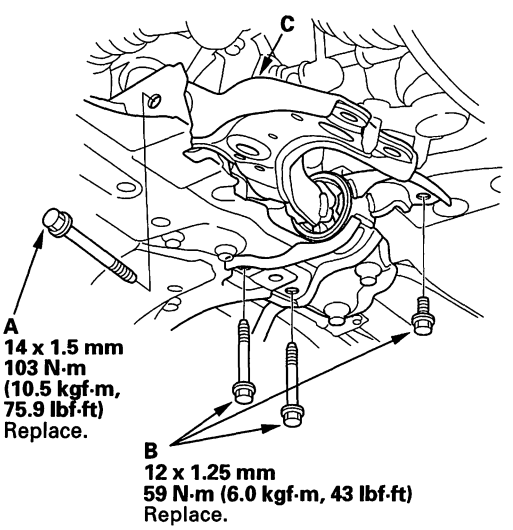


7. Remove the lower arm mounting bolts (B), then remove the lower arm (C) from the front suspension subframe.

   NOTE: During installation, install new mounting bolts.

8. Install the lower arm in the reverse order of removal, and note these items:

   - First install all the components, and lightly tighten the bolts and nuts, then raise the suspension to load it with the vehicle's weight before fully tightening to the specified torque values.
   - Tighten all mounting hardware to the specified torque values.
   - Before installing the wheel, clean the mating surface of the brake disc and the inside of the wheel.
   - Check the wheel alignment, and adjust it if necessary (see page 18-5).



BACK

Protected by AR

## Bushing Replacement

1. Press out the lower arm (A) with the suitable socket wrench and a hydraulic press, and remove the lower arm from the bushing (B).

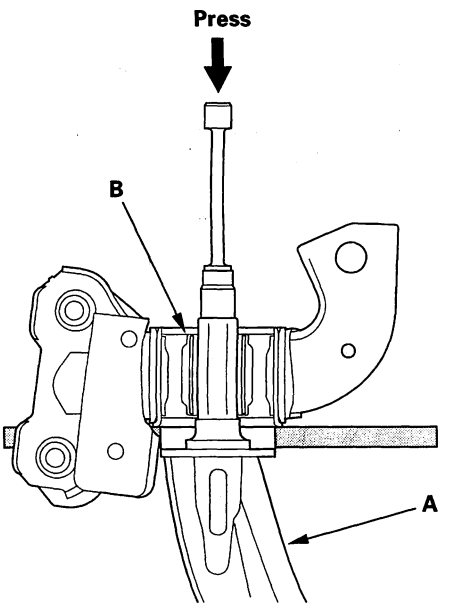


2. Apply a mild solution of soap and water to the new bushing surface.

3. Align the angle of the lower arm (A) and the tab portion (B) of the bushing (C). Press in the bushing by hand first.

   NOTE: The installed bushing's tab portion points upward and downward to the installed lower arm.

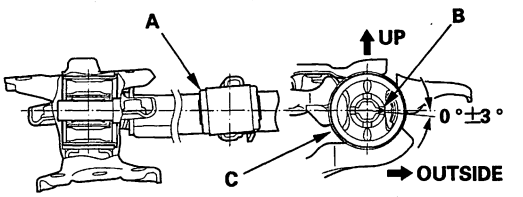


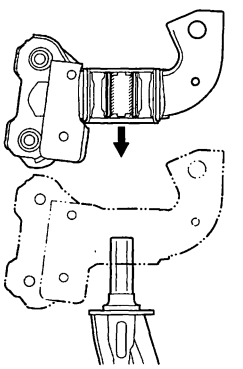

4. Press in the bushing with a suitable socket wrench and a hydraulic press.

5. Adjust the distance between the top of the lower arm and the bushing surface to the dimension shown.

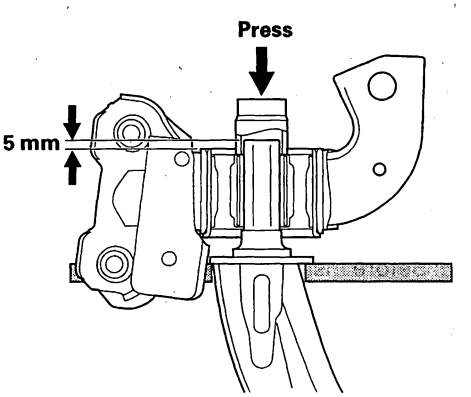

Protected by AR



## Stabilizer Link Removal/Installation

1. Raise the front of the vehicle, and support it with safety stands in the proper locations (see page 1-7).

2. Remove the front wheel.

3. Remove the flange nuts while holding the respective joint pin (A) with a hex wrench (B), then remove the stabilizer link (C).

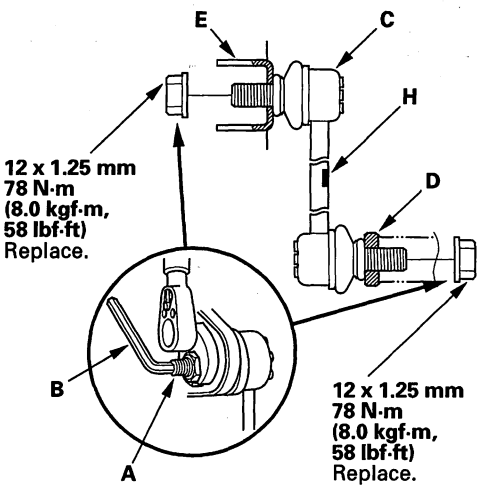


4. Install the stabilizer link on the stabilizer bar (D) and the damper (E) with the joint pins set at the center of their range of movement.

   NOTE: The stabilizer link has a paint mark (H). Align the paint mark on the stabilizer link facing inward.

5. Install the new flange nuts and lightly tighten them.

6. Tighten the flange nuts to the specified torque value while holding the respective joint pin with a hex wrench.

7. Reinstall all removed parts and test-drive the vehicle.

   NOTE: Before installing the wheel, clean the mating surface of the brake disc and the inside of the wheel.

## Stabilizer Bar Replacement

1. Raise the front of the vehicle, and support it with safety stands in the proper locations (see page 1-7).

2. Remove the front wheels.

3. Disconnect both stabilizer links from the stabilizer bar (see page 18-22).

4. Remove the flange bolts (A) and the bushing holders (B), then remove the bushings (C).

   NOTE: During installation, align the point marks (D) on the stabilizer bar with the sides of the bushings.

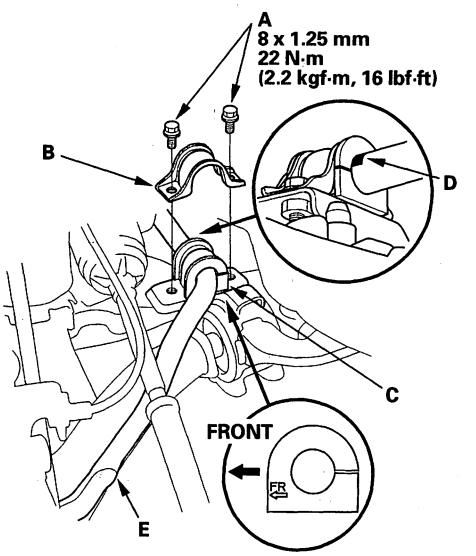


5. Disconnect both tie-rod ball joints from the knuckle (see step 10 on page 18-14).

6. Remove the stabilizer bar (E) through the wheelwell opening on the passenger's side.



BACK

Protected by AR

7. Install the stabilizer bar in the reverse order of removal, and note these items:

   - Note the right and left direction of the stabilizer bar.
   - Align the paint marks on the stabilizer bar with the sides of the bushings.
   - Note the fore/aft direction of the bushing.
   - Refer to stabilizer link removal/installation to connect the stabilizer bar to the links (see page 18-22).
   - Before installing the wheel, clean the mating surface of the brake disc and the inside of the wheel, then install the front wheels.
   - Check the wheel alignment, and adjust it if necessary (see page 18-5).

## Damper/Spring Removal and Installation

### Removal

1. Raise the front of the vehicle, and support it with safety stands in the proper locations (see page 1-7).

2. Remove the front wheel.

3. Remove the wheel sensor harness clip (A), the wire guide (B) and the brake hose bracket (C) from the damper (D). Do not disconnect the wheel sensor connector.

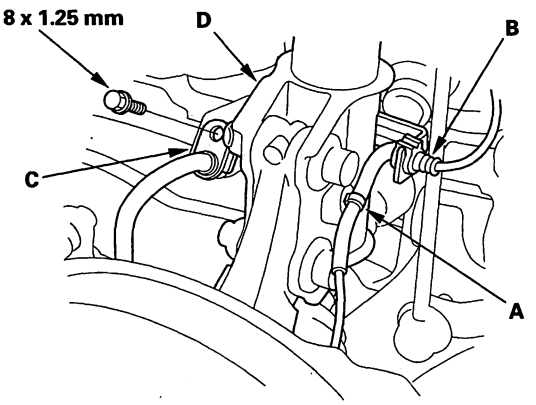


(cont'd)

Protected by AR



## Damper/Spring Removal and Installation (cont'd)

4. Disconnect the stabilizer link from the damper (see page 18-22).

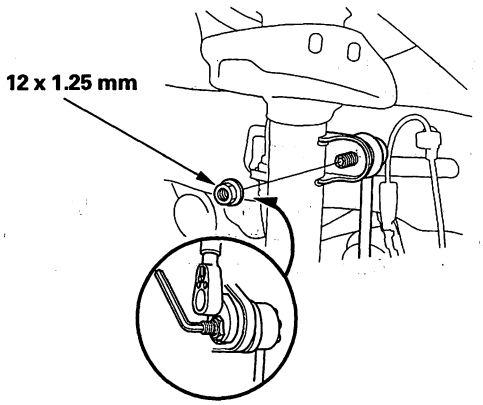


5. Remove the damper pinch bolts (A) and self-locking nuts (B) from the damper.

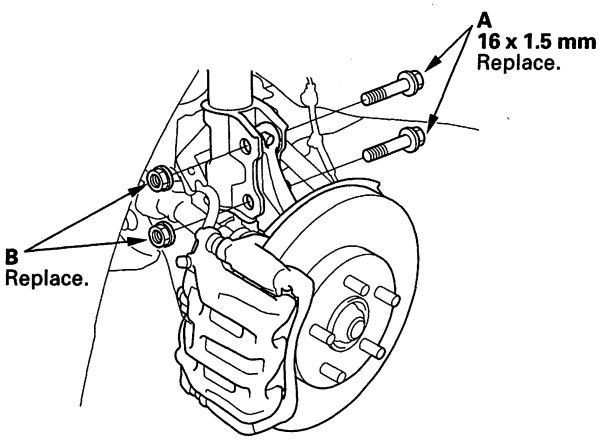


6. Remove the lid (A).

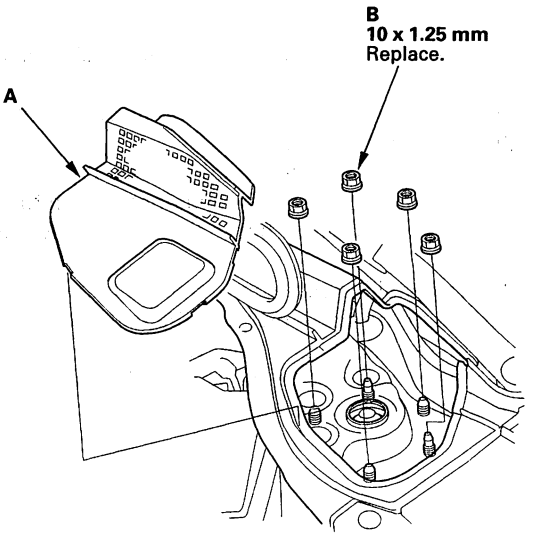


7. Remove the flange nuts (B) from the top of the damper.

   NOTE: Damper springs are different, left and right. Mark the springs L and R before you continue.

8. Remove the damper assembly (A).

   NOTE: Be careful not to damage the body.

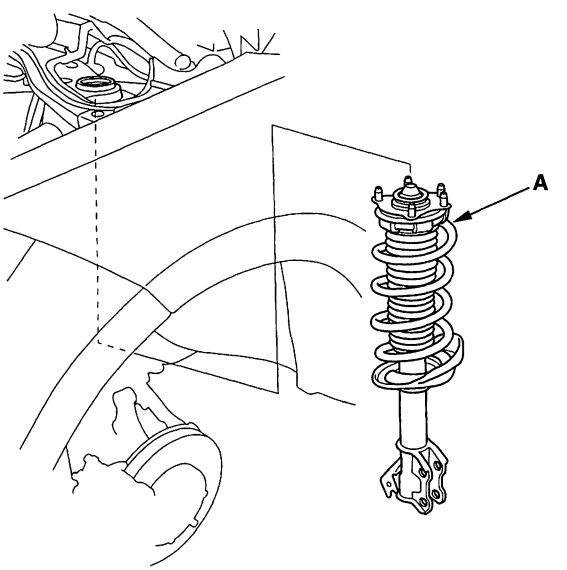




BACK

Protected by AR

## Installation

1. Install the damper assembly (A) onto the frame.

   NOTE: Be careful not to damage the body.

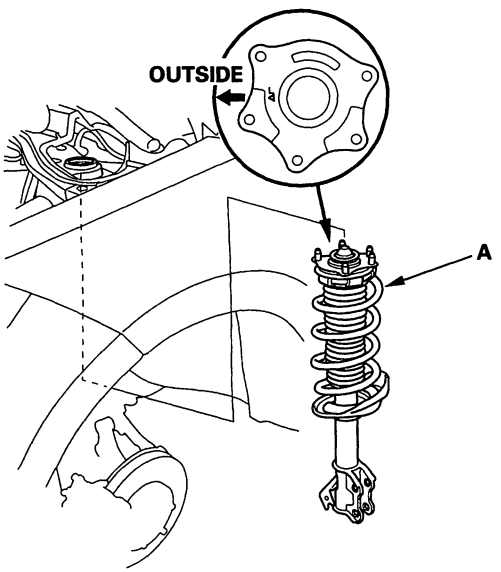


2. Loosely install the new flange nuts.

   NOTE: Install the lid (C) after tightening them to the specified torque value beginning with the flange nut A and the flange nut B.

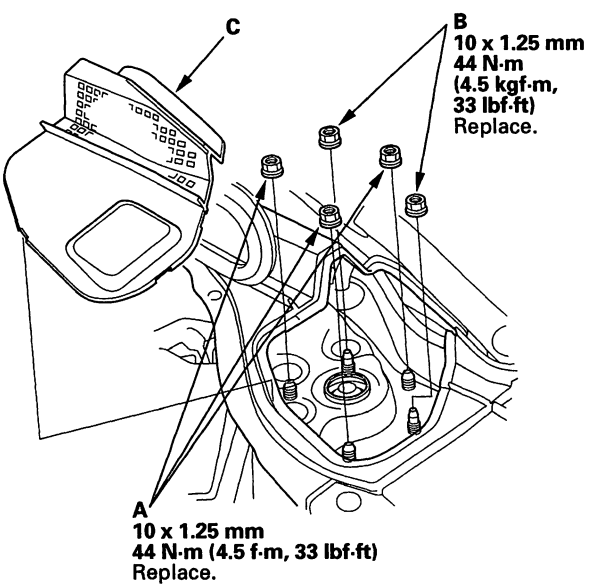


3. Loosely install the new damper pinch bolts (A) and new self-locking nuts (B) to the damper (C).

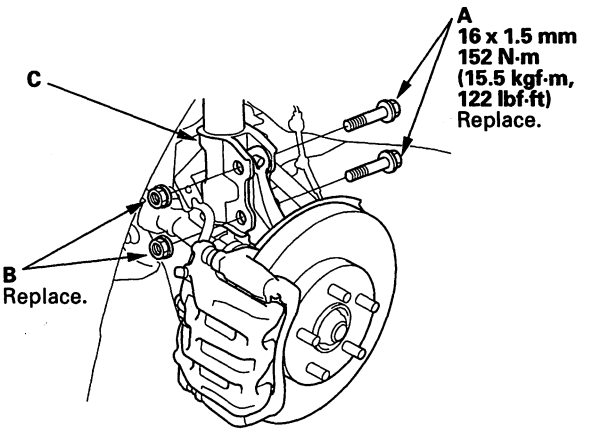


4. Connect the stabilizer link to the damper (see page 18-22).

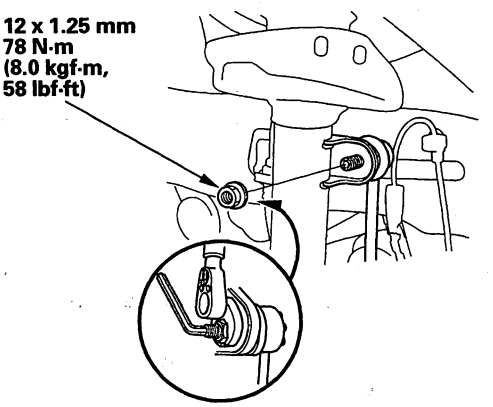


(cont'd)

Protected by AR



## Damper/Spring Removal and Installation (cont'd)

5. Install the wheel sensor harness clip (A), the wire guide (B), and the brake hose bracket (C) to the damper (D).

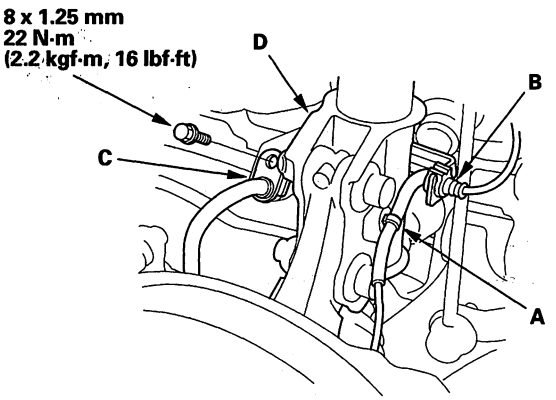


6. Raise the front suspension with a floor jack to load the suspension with the vehicle's weight.

7. Tighten the damper pinch bolts and the self-locking nuts to the specified torque value.

8. Tighten the flange nuts on top of the damper to the specified torque value beginning with the flange nut A and the flange nut B.

9. Install the lid.

10. Clean the mating surface of the brake disc and the inside of the wheel, then install the front wheel.

11. Check the wheel alignment, and adjust it if necessary (see page 18-5).



BACK

Protected by AR

## Damper/Spring Disassembly, Inspection, and Reassembly

### Exploded View

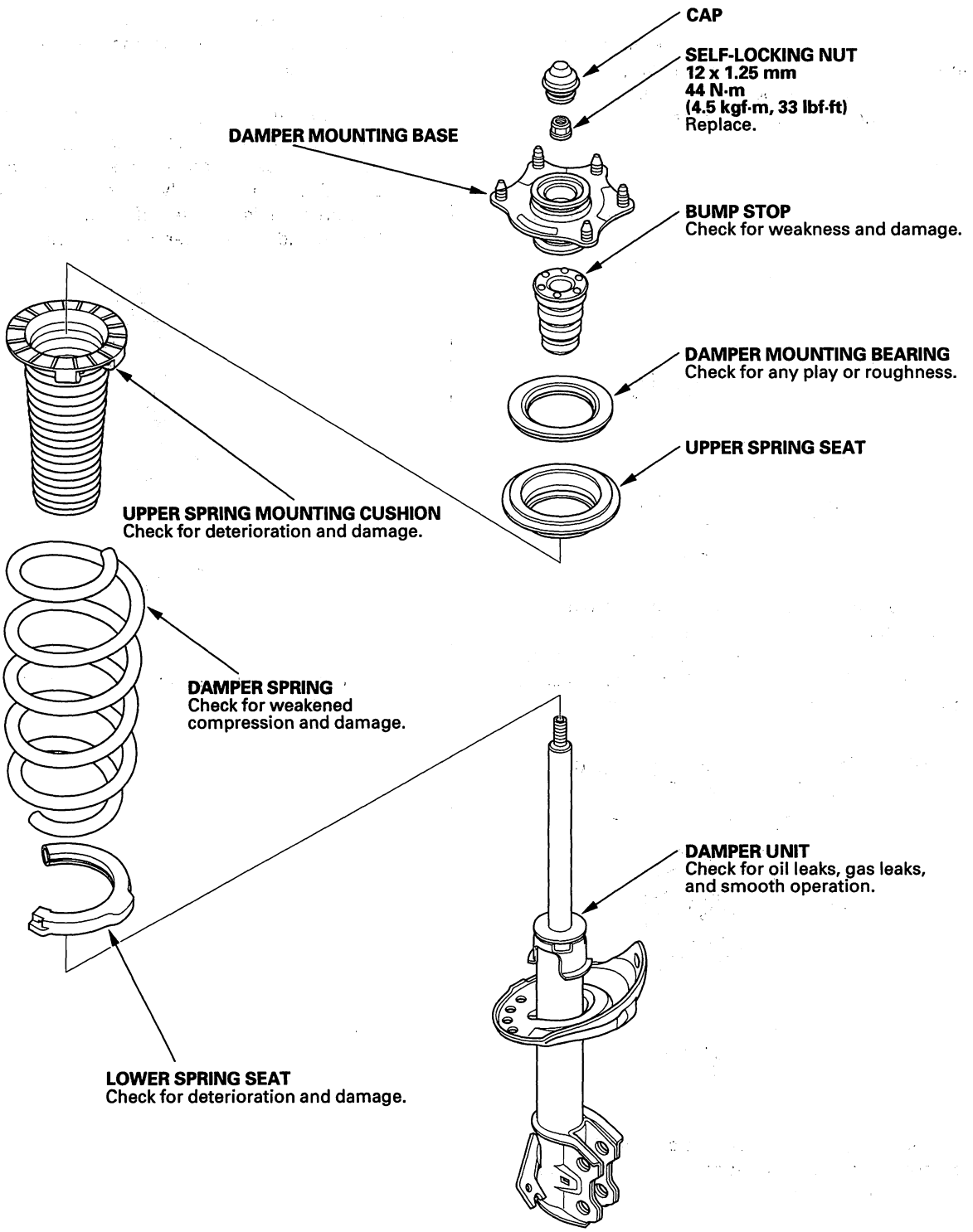


(cont'd)

Protected by AR



## Damper/Spring Disassembly, Inspection, and Reassembly (cont'd)

**Special Tools Required**
Strut nut adapter 07AAA-SVAA100

NOTE: When compressing the damper spring, use a commercially available strut spring compressor (Branick MST-580A or Model 7200, or equivalent) according to the manufacturer's instructions.

### Disassembly

1. Remove the cap (A) from the top of the damper.

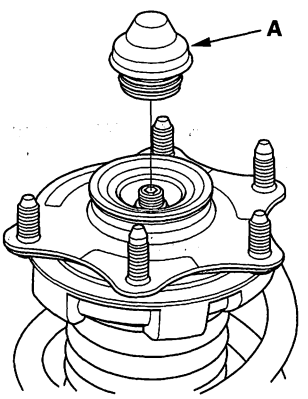


2. Compress the damper spring, then remove the self-locking nut with the strut nut adapter (A) and 17 mm deep socket (B), while holding the damper shaft with a hex wrench (C). Do not compress the spring more than necessary to remove the nut.

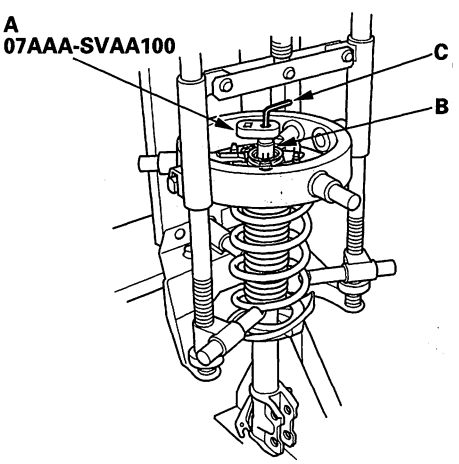


3. Release the pressure from the strut spring compressor, then disassemble the damper as shown in the Exploded View.

### Inspection

1. Reassemble all the parts, except for the upper spring mounting cushion, the bump stop, and the damper spring.

2. Compress the damper assembly by hand, and check for smooth operation through a full stroke, both compression and extension. The damper should extend smoothly and constantly when compression is released. If it does not, the gas is leaking and the damper should be replaced.

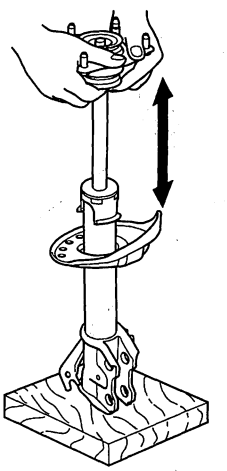

3. Check for oil leaks, abnormal noises, or binding during these tests.



BACK

Protected by AR

## Reassembly

1. Install the damper spring (A) on the upper spring mounting cushion (B), then align the upper end (C) of the damper spring with the cushion stop (D).

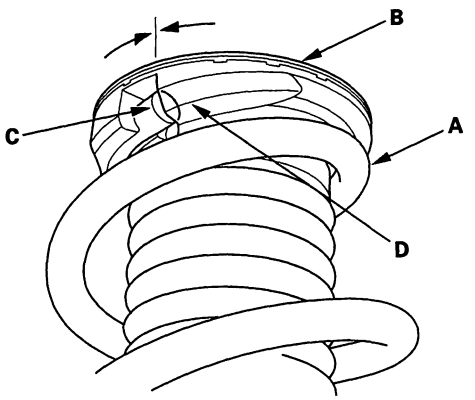


2. Compress the damper spring.

3. Install all the parts except the damper mounting washer and self-locking nut onto the damper unit (A) by referring to the Exploded View.

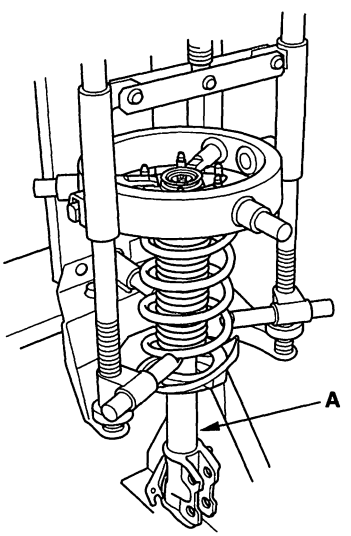


4. Align the bottom of the damper spring (A) with the stepped part (B) of the lower spring seat.

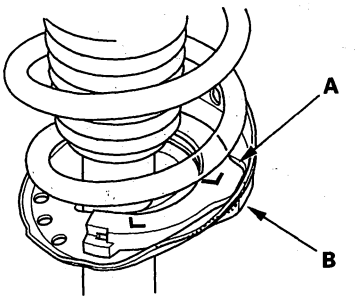


5. Align the damper bracket (A) and the damper mounting base (B) so that "△" stamp (C) points toward outside.

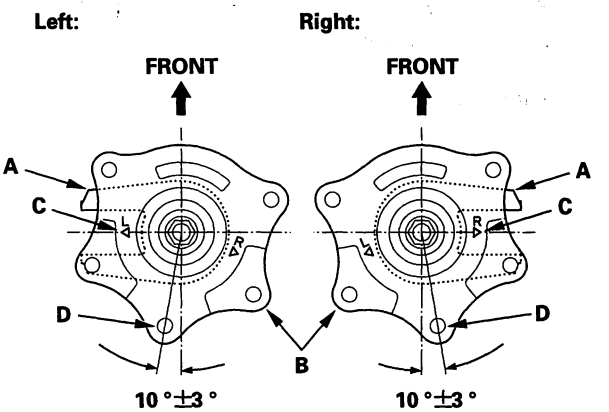


6. Align the angle of the stud bolt (D) on the damper bracket as shown.

(cont'd)

Protected by AR



## Damper/Spring Disassembly, Inspection, and Reassembly (cont'd)

7. Install a new self-locking nut (A).

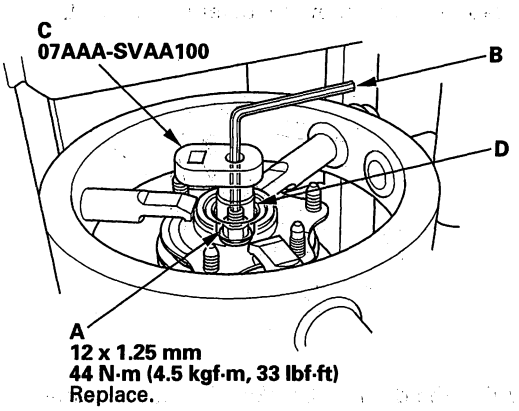


8. Hold the damper shaft using a hex wrench (B), and tighten the new self-locking nut using the strut nut adapter (C) and 17 mm deep socket (D) to the specified torque value.

9. Install the cap.



BACK

Protected by AR



## Knuckle/Hub Bearing Unit Replacement

### Exploded View

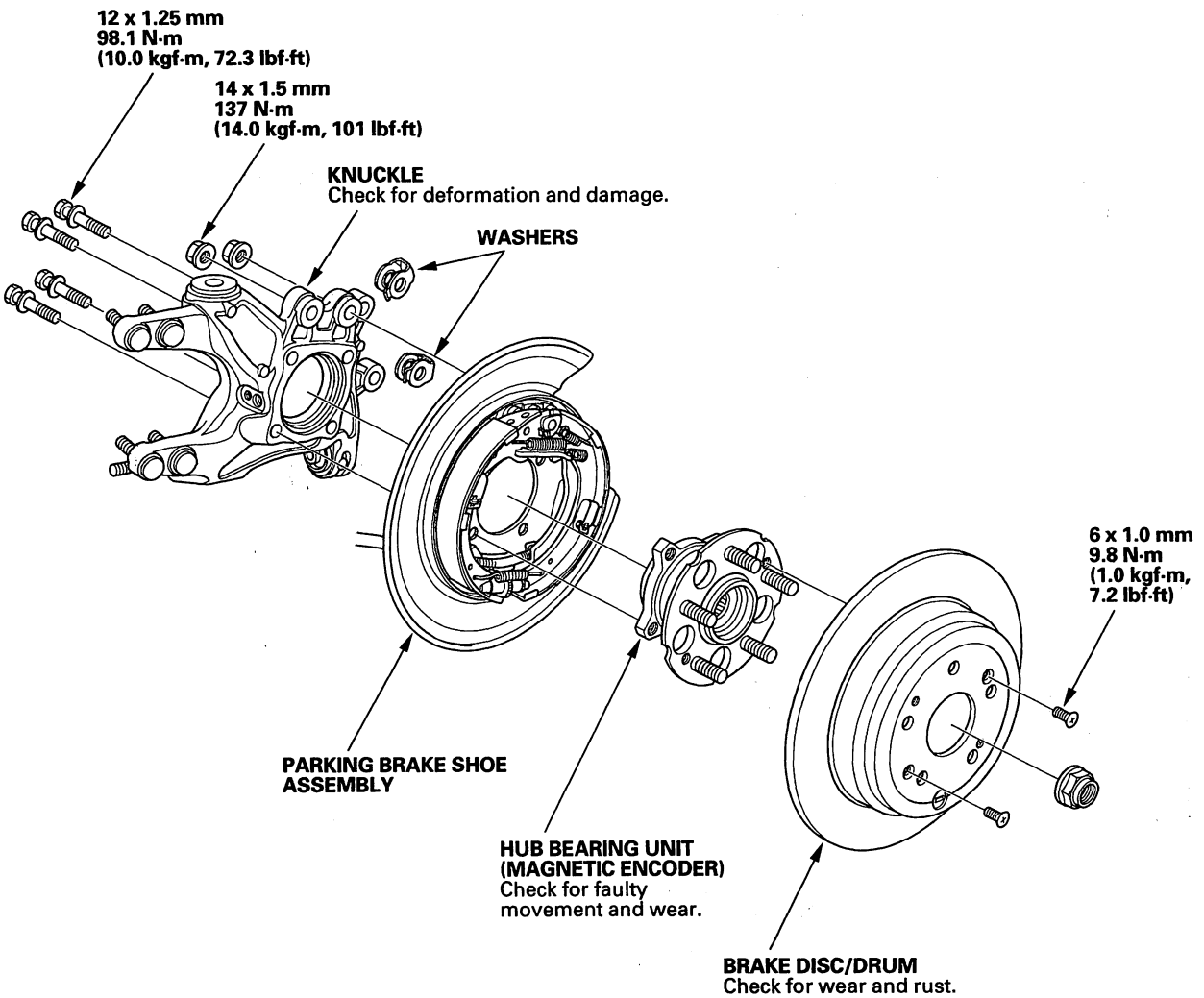


(cont'd)

Protected by AR



## Knuckle/Hub Bearing Unit Replacement (cont'd)

**Special Tools Required**
Ball joint remover, 32 mm 07MAC-SL0A102

### Hub Bearing Unit Replacement

1. Raise the rear of the vehicle, and support it with safety stands in the proper locations (see page 1-7).

2. Remove the wheel nuts (A) and rear wheel.

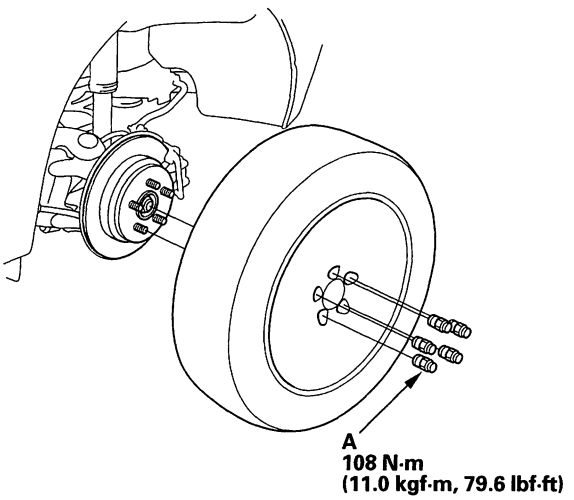


3. Remove flange nuts (A), then remove the brake hose mounting bracket.

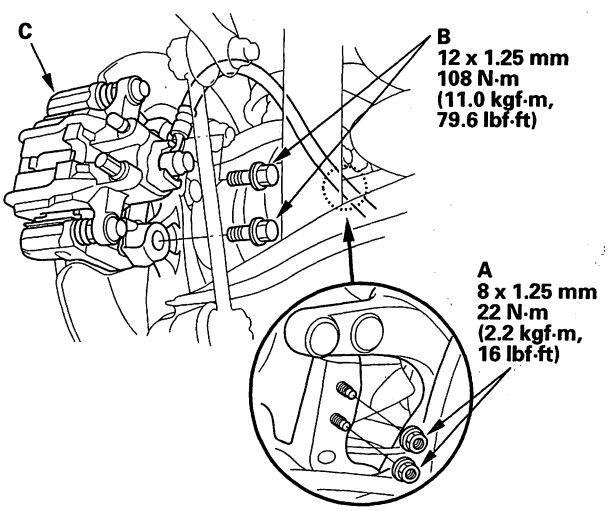


4. Remove the caliper mounting bolts (B), and hang the caliper assembly (C) to one side. To prevent damage to the caliper assembly or brake hose, use a short piece of wire to hang the caliper from the undercarriage.

5. Remove the two washers (A).

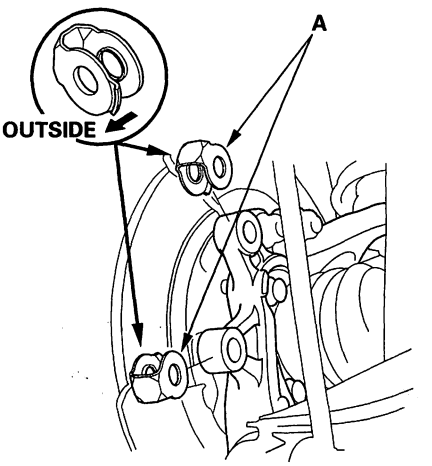


6. Raise the stake (A), then remove the spindle nut (B).

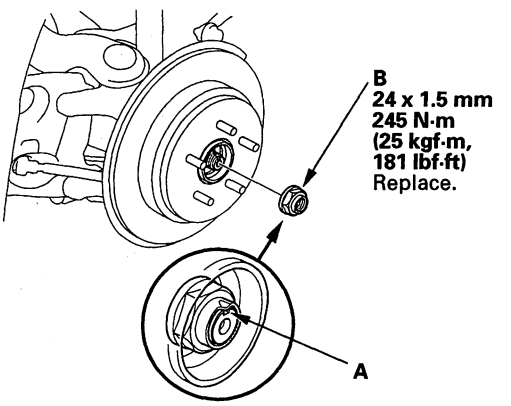




BACK

Protected by AR

7. Release the parking brake, and remove the brake disc/drum (A) from the hub bearing unit.

   NOTE:
   - Remove the access plug (B), then, if necessary, turn the adjuster bolt (C) with a flat-tip screwdriver until the shoes become loose if necessary.
   - If the brake disc/drum has clung to the hub bearing unit. Screw two 8 x 1.25 mm bolts (D) into the brake disc/drum to push it away from the hub bearing unit. Turn each bolt 90 degrees at a time to prevent cocking the brake disc/drum.
   - After installation, press the brake pedal several times to make sure the brakes work if adjusted to loosen the shoes.

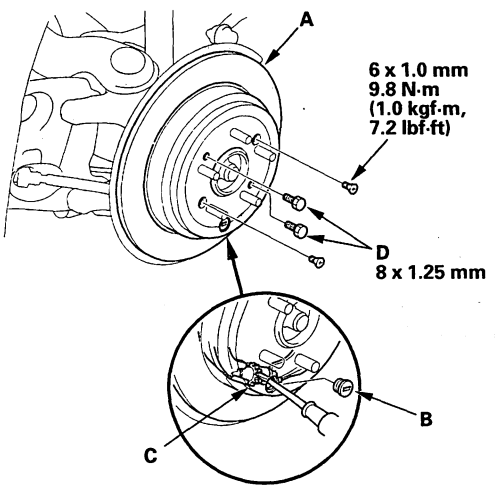


8. Remove the hub bearing unit (A).

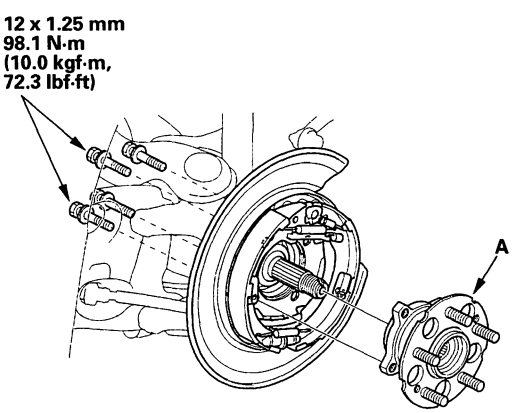


9. Check the rear hub bearing unit for damage and cracks.

10. Install the hub bearing unit in the reverse order of removal, and note these items:

    - Tighten all mounting hardware to the specified torque values.
    - Use a new spindle nut during reassembly.
    - Before installing the spindle nut, apply a small amount of engine oil to the seating surface of the nut. After tightening, use a drift to stake the spindle nut shoulder against the driveshaft.
    - Before installing the brake disc/drum, clean the mating surface of the hub bearing unit and the inside of the brake disc/drum.
    - Before installing the wheel, clean the mating surface of the brake disc/drum and the inside of the wheel.
    - Check the wheel alignment, and adjust it if necessary (see page 18-5).

(cont'd)

Protected by AR



## Knuckle/Hub Bearing Unit Replacement (cont'd)

### Knuckle Replacement

1. Remove the hub bearing unit.

2. Remove the parking brake cable (A) from the trailing arm (B).

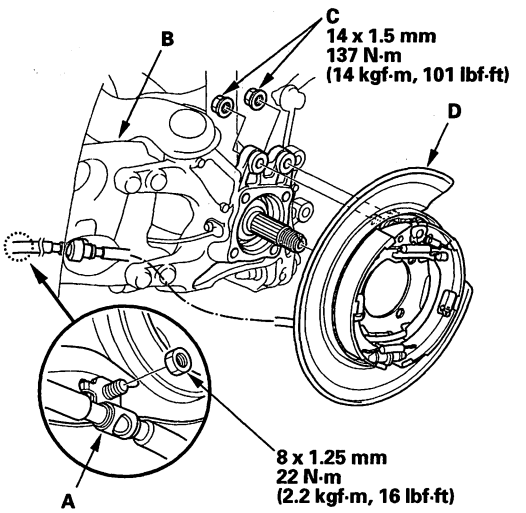


3. Remove the flange nuts (C), then remove the backing plate (D).

   NOTE: To prevent damage to the backing plate or parking brake cable, use a short pice of wire to hang the backing plate from the undercarriage. Do not twist the parking brake cable excessively.

4. Remove the wheel sensor (A) from the knuckle (B). Do not disconnect the wheel sensor connector.

   NOTE: During installation, apply multipurpose grease to inside of the hole (C) on the knuckle.

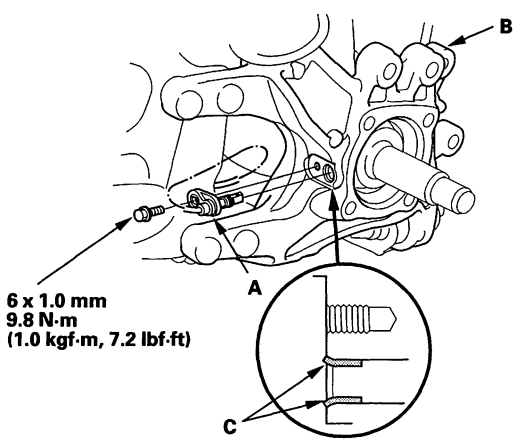


5. Remove the lock pin (A) from the upper arm ball joint (B), and loosen the castle nut (C).

   NOTE: During installation, install the lock pin after tightening the new castle nut.

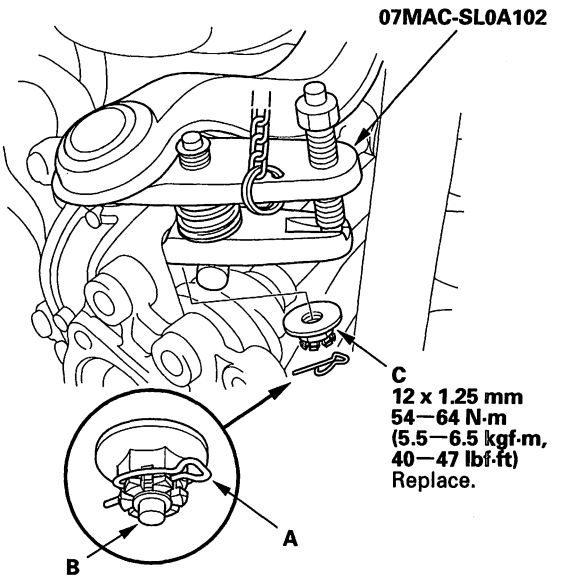


6. Disconnect the upper arm ball joint from the knuckle using the ball joint remover, 32 mm (see page 18-11).



BACK

Protected by AR

7. Remove the self-locking nut (B), the washer (C), and the flange bolt (D), then remove lower arm A.

   NOTE: During installation, install a new self-locking nut, a new washer, and a new flange bolt.

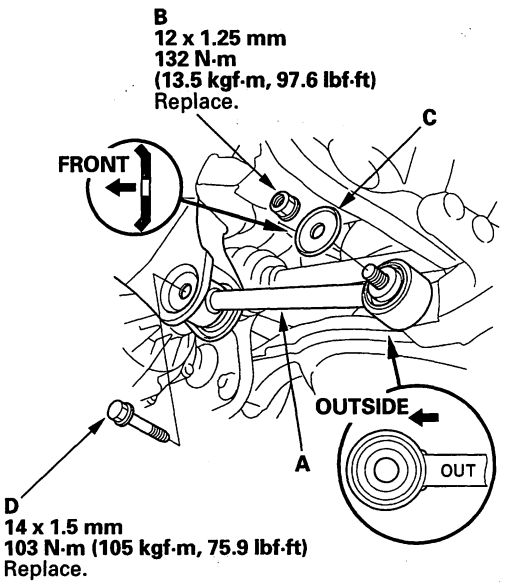


8. Remove the self-locking nuts (A), and separate the knuckle from the trailing arm (B).

   NOTE: During installation, install the new self-locking nuts.

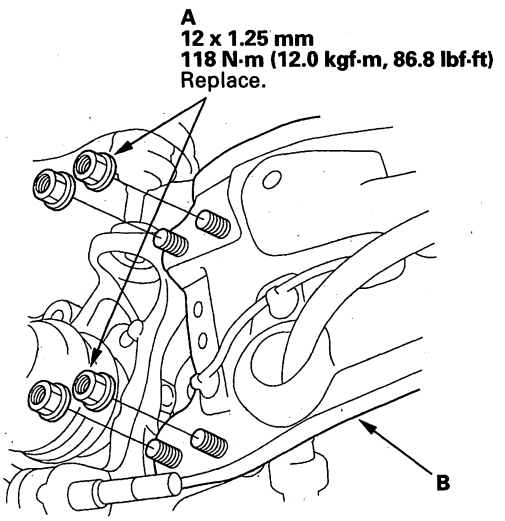


9. Position a floor jack under the lower arm B.

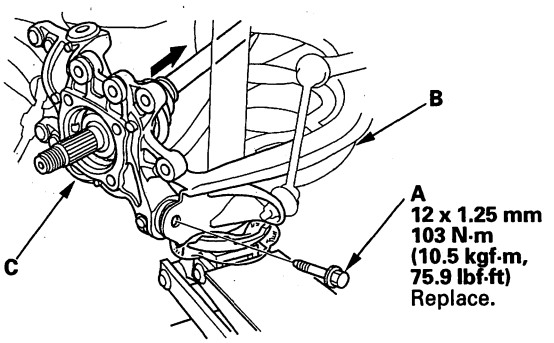


10. Remove the flange bolt (A), then remove the knuckle (C).

    NOTE: During installation, install a new flange bolt.

(cont'd)

Protected by AR



## Knuckle/Hub Bearing Unit Replacement (cont'd)

11. Install the knuckle in the reverse order of removal, and note these items:

    - Be careful not to damage the ball joint boot when installing the knuckle.
    - Tighten all mounting hardware to the specified torque values.
    - Before connecting the lower ball joint to the knuckle, degrease the threaded section and tapered portion of the ball joint pin, the knuckle connecting hole, the threaded section, and mating surface of the castle nut.
    - First install all the components, and lightly tighten the bolts and nuts, then raise the suspension to load it with the vehicle's weight before fully tightening to the specified torque values.
    - Torque the castle nut to the lower torque specification, then tighten it only far enough to align the slot with the ball joint pin hole. Do not align the castle nut by loosening it.
    - Use a new spindle nut during reassembly.
    - Before installing the spindle nut, apply a small amount of engine oil to the seating surface of the nut. After tightening, use a drift to stake the spindle nut shoulder against the driveshaft.
    - Before installing the brake disc, clean the mating surface of the front hub and the inside of the brake disc.
    - Before installing the wheel, clean the mating surface of the brake disc and the inside of the wheel.
    - Check the wheel alignment, and adjust it if necessary (see page 18-5).

## Upper Arm Removal/Installation

**Special Tools Required**
Ball joint remover, 32 mm 07MAC-SL0A102

1. Raise the rear of the vehicle, and support it with safety stands in the proper locations (see page 1-7).

2. Remove the rear wheel.

3. Position a floor jack at the connecting point of the lower arm B and the knuckle.

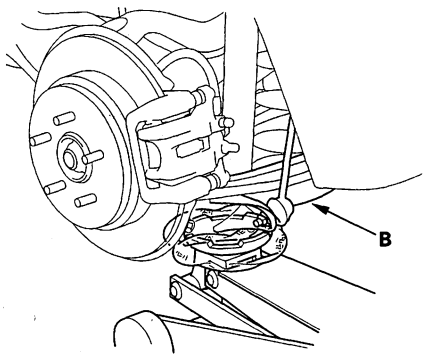


4. Remove the lock pin (A) from the upper arm ball joint (B), and loosen the nut (C).

   NOTE: During installation, install the lock pin after tightening the new castle nut.

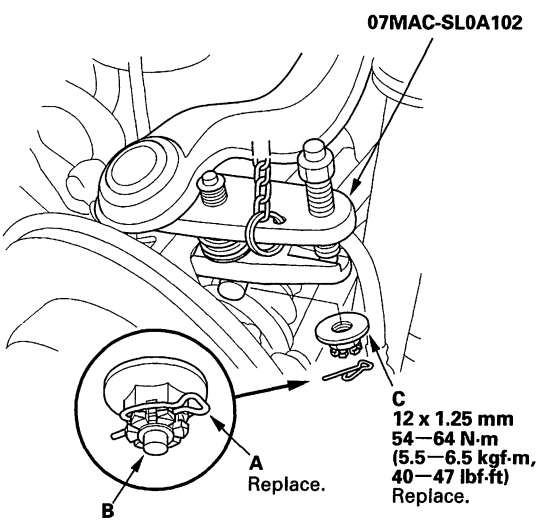


5. Disconnect the upper arm ball joint from the knuckle using the ball joint remover (see page 18-11).



BACK

Protected by AR

6. Remove the flange bolt (A), then remove the upper arm (B) from the vehicle.

   NOTE: During installation, install a new flange bolt.

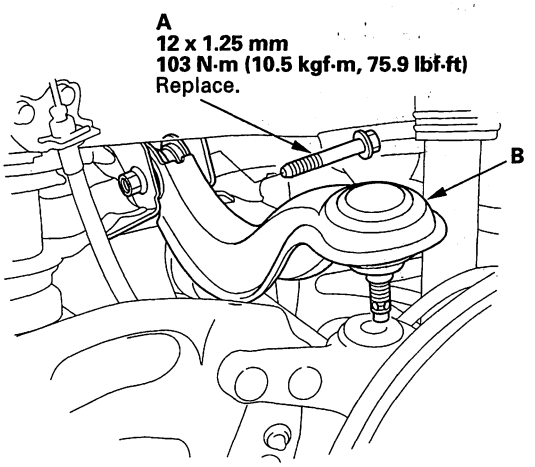


7. Install the upper arm in the reverse order of removal, and note these items:

   - Be careful not to damage the ball joint boot when installing the knuckle.
   - Tighten all mounting hardware to the specified torque values.
   - First install all the components and lightly tighten the flange bolt and the castle nut, then raise the suspension to load it with the vehicle's weight before fully tightening to the specified torque values.
   - Torque the castle nut to the lower torque specification, then tighten it only far enough to align the slot with the ball joint pin hole. Do not align the castle nut by loosening it.
   - Before installing the wheel, clean the mating surface of the brake disc and the inside of the wheel.
   - Check the wheel alignment, and adjust if necessary (see page 18-5).

Protected by AR



## Lower Arm A Removal/Installation

1. Raise the rear of the vehicle, and support it with safety stands in the proper locations (see page 1-7).

2. Remove the rear wheel.

3. Position a floor jack at the connecting point of the lower arm B and the knuckle.

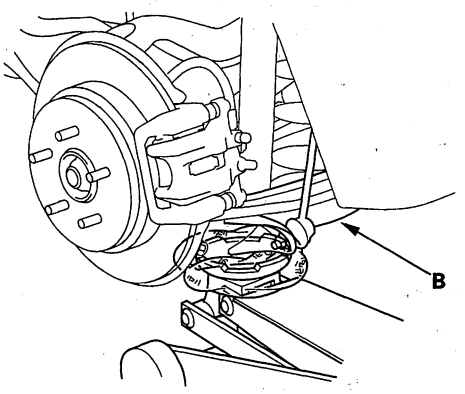


4. Remove the self-locking nut (B), the washer (C), and the flange bolt (D).

   NOTE: During installation, install a new self-locking nut and a new flange bolt.

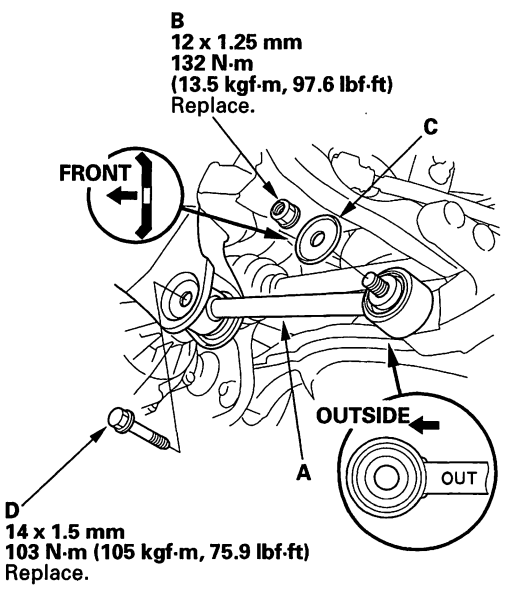


5. Remove the lower arm A from the vehicle.

6. Install the lower arm A in the reverse order of removal, and note these items:

   - Tighten all mounting hardware to the specified torque values.
   - First install all the components and lightly tighten the bolts and nuts, then raise the suspension to load it with the vehicle's weight before fully tightening to the specified torque values.
   - Before installing the wheel, clean the mating surface on the brake disc/drum and the inside of the wheel.
   - Check the wheel alignment, and adjust it if necessary (see page 18-5).



BACK

Protected by AR

# Lower Arm B Removal and Installation

## Removal

1. Raise the rear of the vehicle, and support it with safety stands in the proper locations (see page 1-7).

2. Remove the rear wheel.

3. Position the floor jack at the connecting point of lower arm B and the lower damper mount.

4. Disconnect the stabilizer link from the lower arm B (see page 18-42).

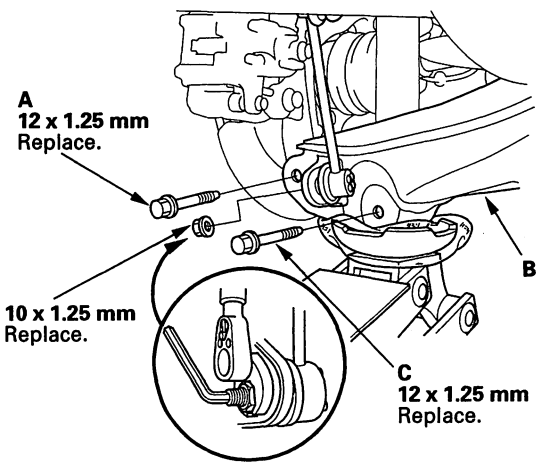


5. Remove the flange bolt (A) that connects the lower arm B and the knuckle.

6. Remove the flange bolt (C) that connects the lower arm B and the damper.

7. Lower the floor jack gradually.

8. Remove the spring (A) and the lower spring cushion (C).

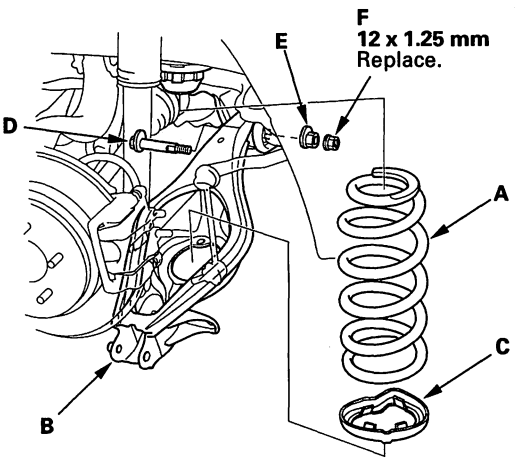


9. Mark the cam positions of the adjusting bolt (D) and adjusting cam (E), then remove the self-locking nut (F), adjusting cam, and adjusting bolt. Set aside the self-locking nut and control arm mounting nut, then remove the lower arm B.

(cont'd)

Protected by AR



## Lower Arm B Removal and Installation (cont'd)

### Installation

1. Position the lower arm B, and loosely install the new adjusting bolt (A), adjusting cam (C), and the new self-locking nut (D).

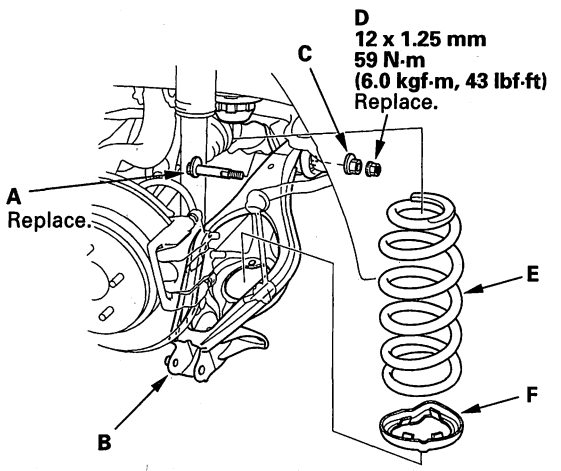


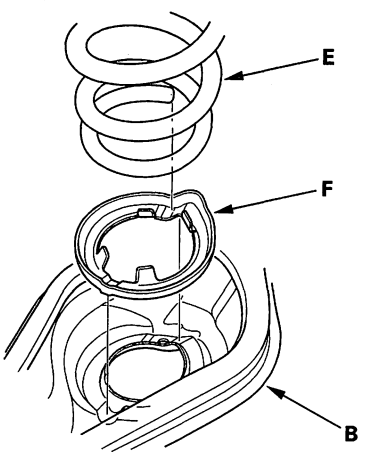


2. Install the spring (E), and lower spring cushion (F). Align the bottom of the spring and the lower spring cushion with the lower arm B as shown.

3. Position the floor jack at the connecting point of the lower arm B and the lower damper mount.

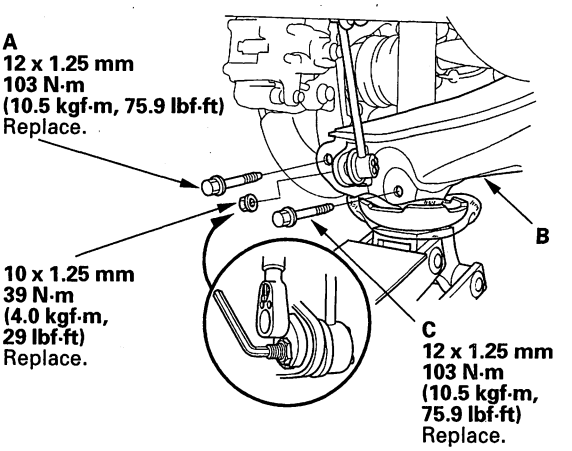


4. Slowly raise the floor jack until you can align the bolt hole with the holes in the lower arm B and the knuckle, then install the new flange bolt (A) loosely.

5. Compress the damper by hand until you can align the bolt hole with the holes in the lower arm B and the damper, then install the new flange bolt (C) loosely.

6. Connect the stabilizer link to the lower arm B (see page 18-42).

7. Raise the rear suspension with the floor jack until the vehicle just lifts off the safety stands, then tighten the flange bolts and the self-locking nut to the specified torque values.

8. Clean the mating surface of the brake disc/drum and the inside of the wheel, then install the rear wheel.

9. Check the rear wheel alignment, and adjust it if necessary (see page 18-5).



BACK

Protected by AR

## Trailing Arm Removal/Installation

1. Raise the rear of the vehicle, and support it with safety stands in the proper locations (see page 1-7).

2. Remove the rear wheel.

3. Remove the parking brake shoe (see page 19-31).

4. Remove the parking brake cable from the backing plate (see page 19-39).

5. Remove the parking brake cable (A) from the trailing arm (B).

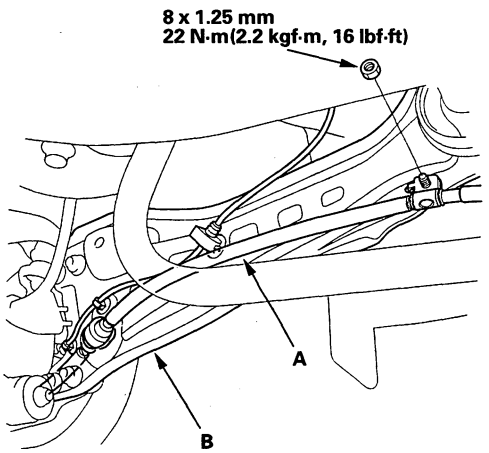


6. Remove the brake hose mounting bracket from the trailing arm (see step 3 on page 18-32).

7. Position a floor jack at the connecting point of the lower arm and the knuckle.

8. Remove the self-locking nuts (A) and the flange bolts (B) from the trailing arm.

   NOTE: During installation, install the new self-locking nuts and the new flange bolts.

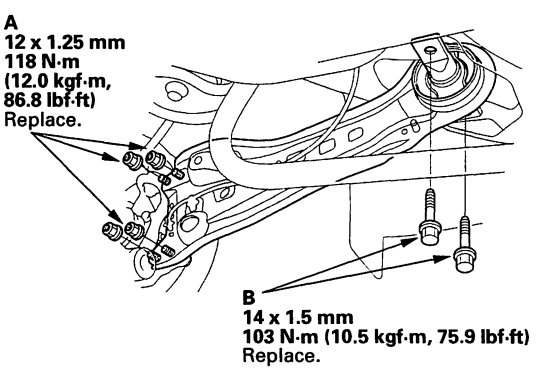


9. Install the trailing arm in the reverse order of removal, and note these items:

   - First install all the components and lightly tighten the bolts and nuts, then raise the suspension to load it with the vehicle's weight before fully tightening to the specified torque values.
   - Tighten all mounting hardware to the specified torque values.
   - Check the brake hose and line joint for leaks, and tighten if necessary.
   - Check the brake hose for interference and twisting.
   - Before installing the wheel, clean the mating surfaces on the brake disc/drum and the inside of the wheel.
   - After installation, check for leaks at the line joint, and retighten if necessary. Check the rear wheel alignment, and adjust it if necessary (see page 18-5).

Protected by AR



## Stabilizer Link Removal/Installation

1. Raise the rear of the vehicle, and support it with safety stands in the proper locations (see page 1-7).

2. Remove the rear wheel.

3. Remove the self-locking nut (A) and the flange nut (B) while holding the respective joint pin (C) with a hex wrench (D), then remove the stabilizer link (E).

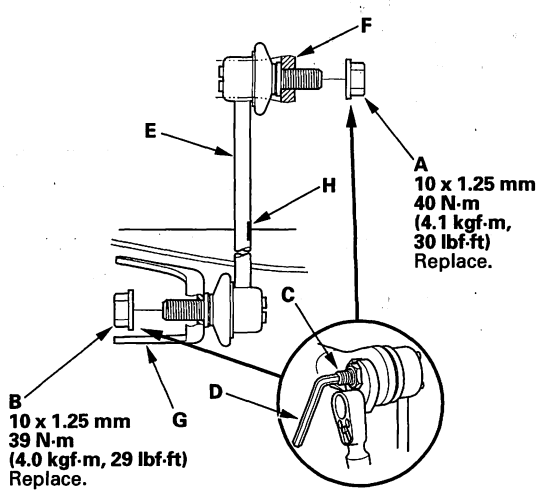


4. Install the stabilizer link on the stabilizer bar (F) and trailing arm (G) with the joint pins set at the center of their range of movement.

   NOTE: The stabilizer link has a paint mark (H). Align the paint mark on the stabilizer link facing inwards.

5. Install a new self-locking nut and a new flange nut, and lightly tighten them.

6. Place the floor jack under the trailing arm, and raise the suspension to load it with the vehicle's weight.

7. Tighten the self-locking nut and the flange nut to the specified torque values while holding the respective joint pins with a hex wrench.

8. Reinstall all removed parts and test-drive the vehicle.

9. After 5 minutes of driving, tighten the self-locking nut again to the specified torque value.

10. Clean the mating surface of the brake disc/drum and the inside of the wheel, then install the rear wheel.

## Stabilizer Bar Replacement

1. Raise the rear of the vehicle, and support it with safety stands in the proper locations (see page 1-7).

2. Remove the rear wheels.

3. Disconnect both stabilizer links from the stabilizer bar (see page 18-42).

4. Remove the flange bolts (A) and the bushing holders (B), then remove the bushings (C) and the stabilizer bar (D).

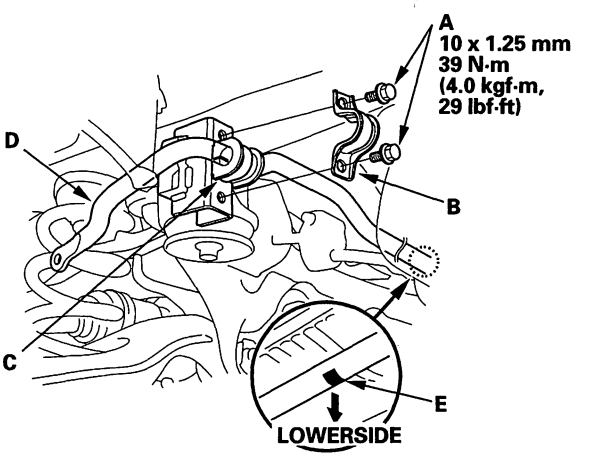


5. Install the stabilizer bar in the reverse order of removal, and note these items:

   - Note the right and left direction of the stabilizer bar.
   - The stabilizer bar has a paint mark (E) on the center facing downwards.
   - Refer to stabilizer link removal/installation to connect the stabilizer bar to the links (see page 18-42).
   - Check the wheel alignment, and adjust it if necessary (see page 18-5).



BACK

Protected by AR

## Damper Replacement

### Exploded View

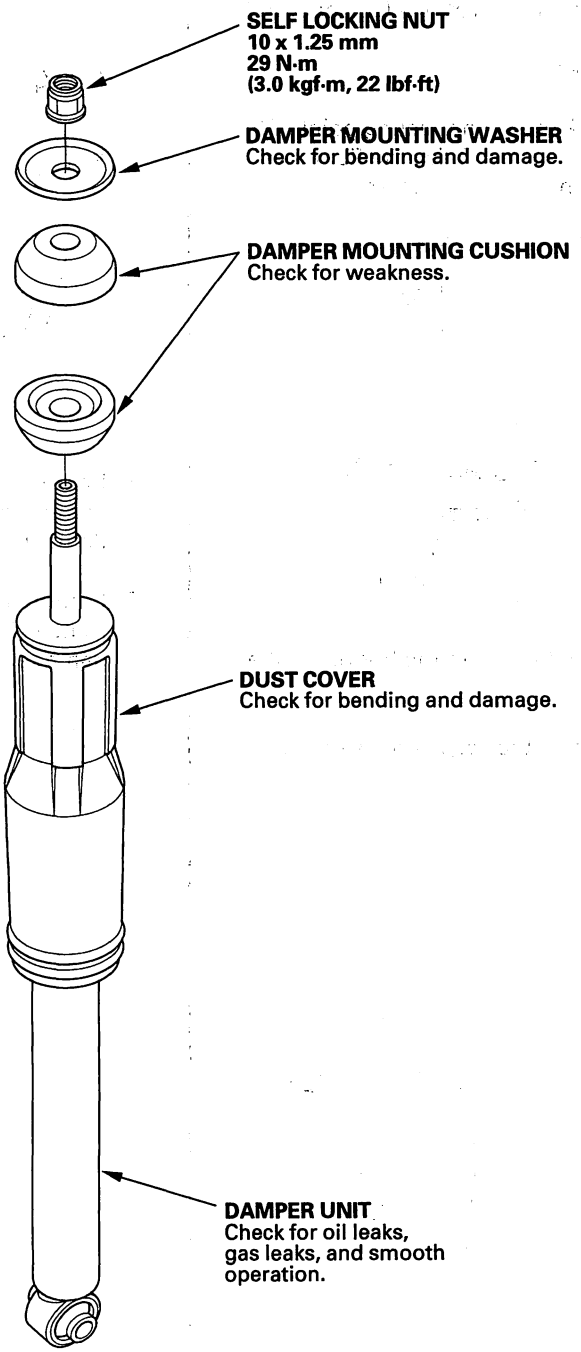


(cont'd)

Protected by AR



## Damper Replacement (cont'd)

### Removal

1. Raise the rear of the vehicle, and support it with safety stands in the proper locations (see page 1-7).

2. Remove the rear wheel.

3. Position the floor jack at the connecting point of the lower arm B and the knuckle. Raise the floor jack until the suspension begins to compress.

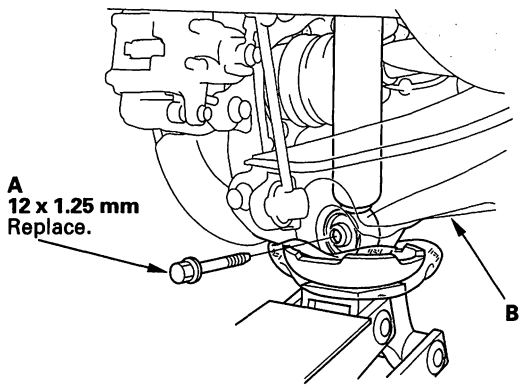


4. Remove the flange bolt (A) from the bottom of the damper.

5. Remove the lid (A) from the cargo area side trim panel.

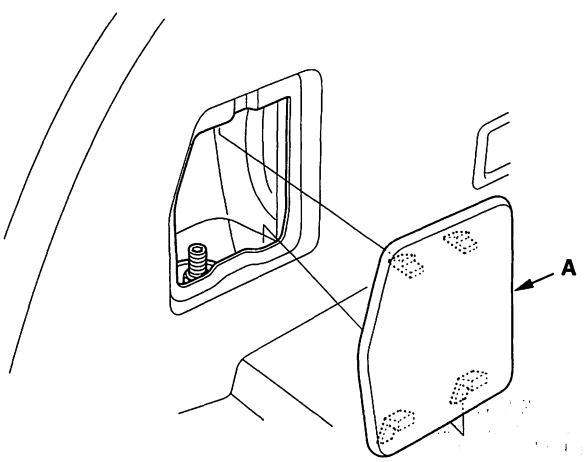


6. Remove the self-locking nut (A) while holding the damper shaft (B) with a hex wrench (C).

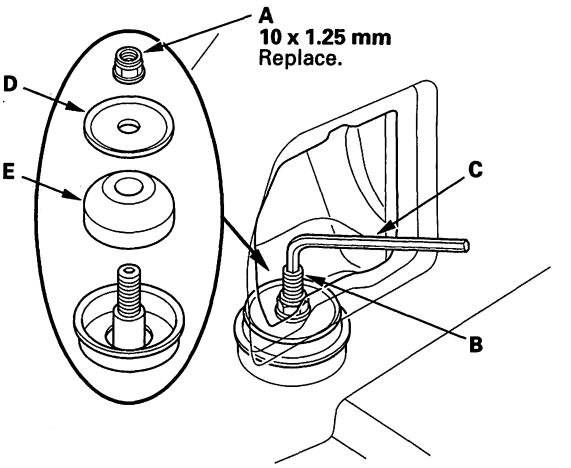


7. Remove the damper mounting washer (D) and the damper mounting cushion (E) from the top of the damper.

8. Compress the damper unit (A) by hand, and remove it from the vehicle. Be careful not to damage the body.

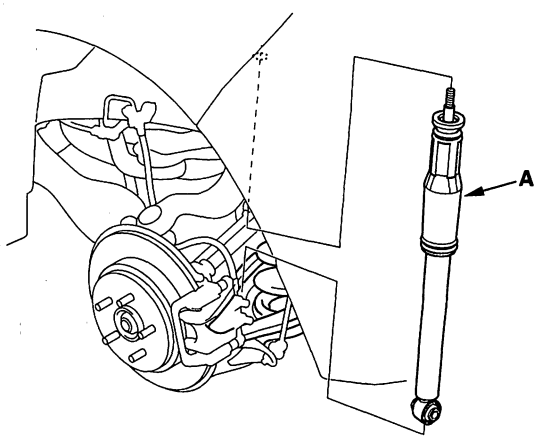




BACK

Protected by AR

## Inspection

1. Install the 10 mm flange nut on the damper shaft end, and set the socket wrench and T-handle on the nut.

2. Compress the damper assembly by hand, and check for smooth operation through a full stroke, both compression and extension. The damper should extend smoothly and constantly when compression is released. If it does not, the gas is leaking and the damper should be replaced.

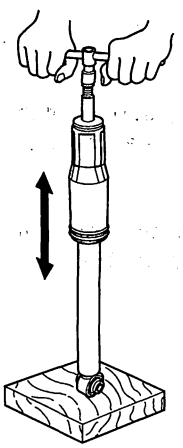

3. Check for oil leaks, abnormal noises, and binding during these tests.

## Installation

1. Install the damper mounting cushion (A) onto the damper unit (B). Compress the damper by hand, and move it into position.

   NOTE: Be careful not to damage the body.

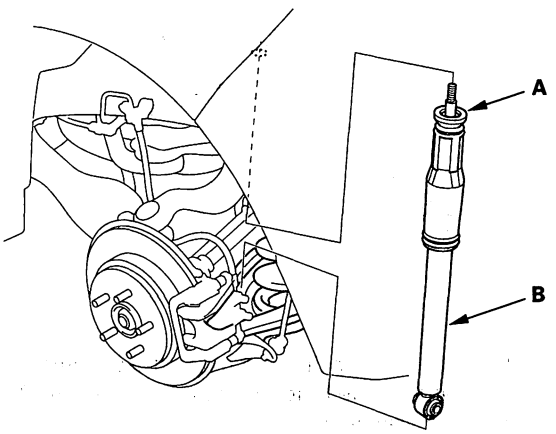


2. Position the floor jack under the lower arm B to support the suspension.

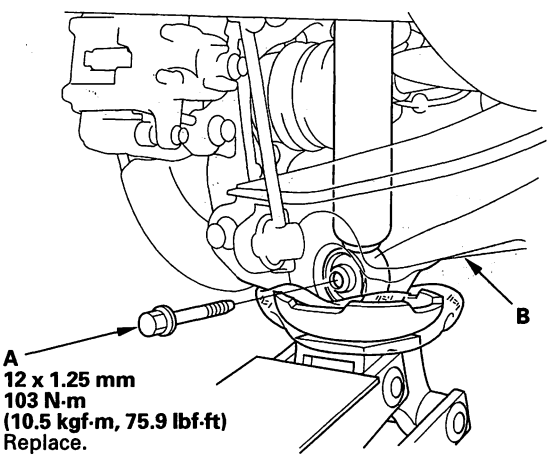


3. Slowly raise the floor jack until you can align the bolt hole with the holes in the lower arm B and the damper, then install the new flange bolt (A) loosely.

4. Raise the rear suspension with the floor jack until the vehicle just lifts off the safety stands, then tighten the flange bolt to the specified torque value.

(cont'd)

Protected by AR



## Damper Replacement (cont'd)

5. Install the damper mounting cushion (A), the damper mounting washer (B), and a new self-locking nut (C) on the damper shaft.

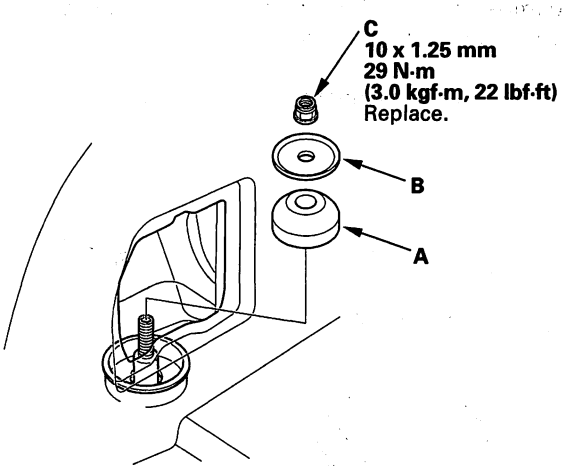


6. Tighten the self-locking nut (A) to the specified torque value while holding the damper shaft (B) with a hex wrench (C).

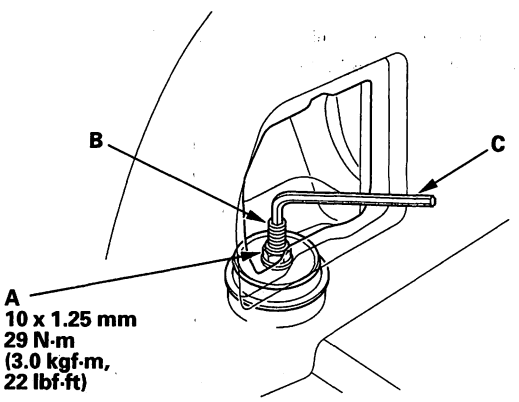


7. Install the lid (A) to the cargo area side trim panel.

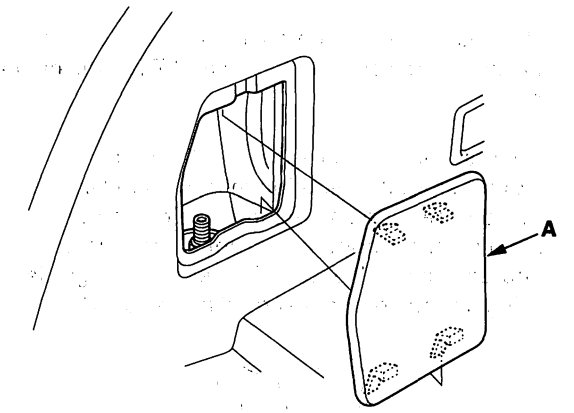


8. Clean the mating surface of the brake disc/drum and the inside of the wheel, then install the rear wheel.

9. Check the wheel alignment, and adjust it if necessary (see page 18-5).



BACK

Protected by AR

## Spring Replacement

### Exploded View

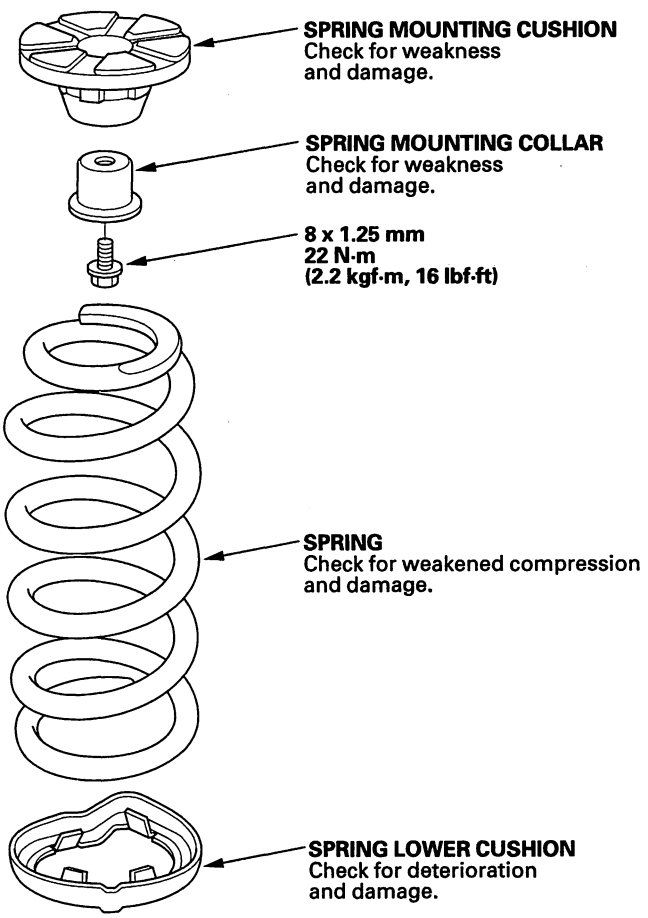


(cont'd)

Protected by AR



## Spring Replacement (cont'd)

### Removal

1. Raise the rear of the vehicle, and support it with safety stands in the proper locations (see page 1-7).
2. Remove the rear wheel.
3. Position the floor jack at the connecting point of lower arm B and the lower damper mount.
4. Disconnect the stabilizer link from the lower arm B (see page 18-42).

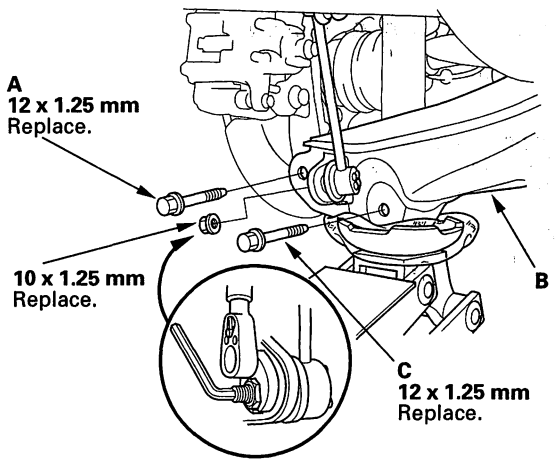


5. Remove the flange bolt (A) that connects the lower arm B and the knuckle.
6. Remove the flange bolt (C) that connects the lower arm B and the bottom of the damper.
7. Lower the floor jack gradually.
8. Remove the spring (A) and the lower spring cushion (B).

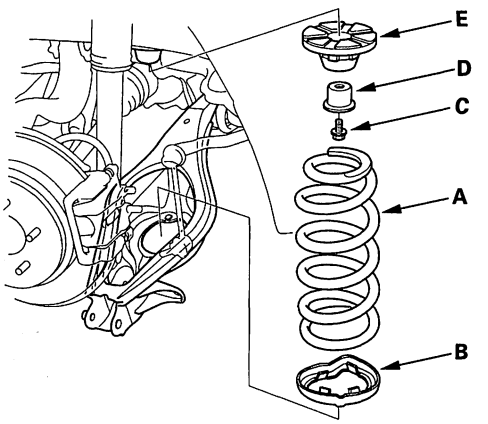


9. Remove the flange bolt (C) that connects to the body, and remove the spring mounting collar (D) and the spring mounting cushion (E) if necessary.



BACK

Protected by AR

## Installation

1. Install the spring mounting cushion (A), the spring mounting collar (C), and tighten the flange bolt (D) to the specified torque value.

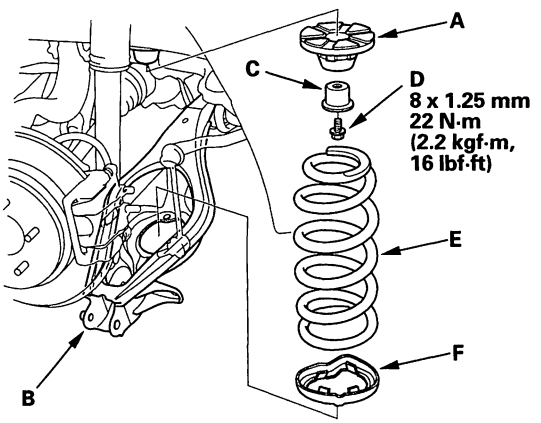


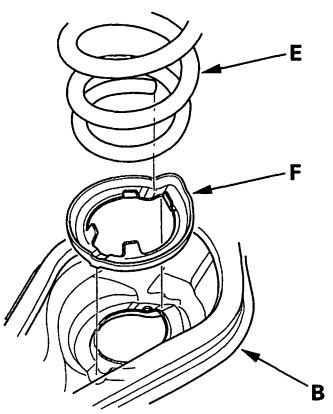


2. Install the spring (E) and the lower spring cushion (F). Align the bottom of the spring and the lower spring cushion with the lower arm B as shown.

3. Position the floor jack at the connecting point of the lower arm B and the knuckle.

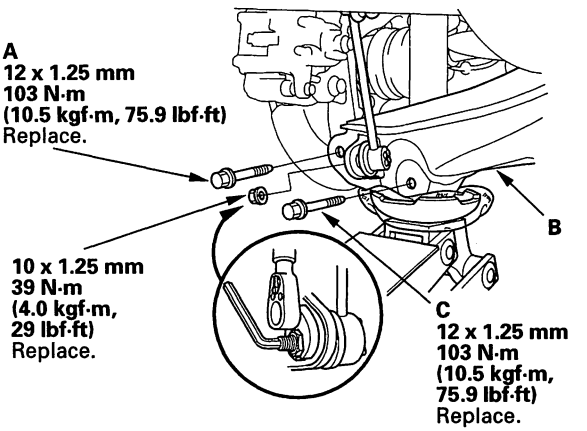


4. Slowly raise the floor jack until you can align the bolt hole with the holes in the lower arm B and the knuckle, then install the new flange bolt (A) loosely.

5. Compress the damper by hand until you can align the bolt hole with the holes in the lower arm B and the damper, then install the new flange bolt (C) loosely.

6. Connect the stabilizer link to the lower arm B (see page 18-42).

7. Raise the rear suspension with the floor jack until the vehicle just lifts off the safety stands, then tighten the flange bolts and the self-locking nut to the specified torque values.

8. Clean the mating surface of the brake disc/drum and the inside of the wheel, then install the rear wheel.

9. Check the rear wheel alignment, and adjust it if necessary (see page 18-5).

Protected by AR

BACK

Protected by AR

# Suspension

**Front and Rear Suspension** ..... **18-2**

**Front Suspension** ..... **18-12**

**Rear Suspension** ..... **18-31**

**TPMS (Tire Pressure Monitoring System)**

Component Location Index ..... 18-52
General Troubleshooting Information ..... 18-53
Memorizing the Tire Pressure Sensor ID ..... 18-56
DTC Troubleshooting Index ..... 18-57
Symptom Troubleshooting Index ..... 18-58
System Description ..... 18-59
Circuit Diagram ..... 18-64
DTC Troubleshooting ..... 18-67
Symptom Troubleshooting ..... 18-86
TPMS Control Unit Replacement ..... 18-90
Initiator Replacement ..... 18-91
Tire Pressure Sensor Replacement ..... 18-92



BACK

Protected by AR



## Component Location Index

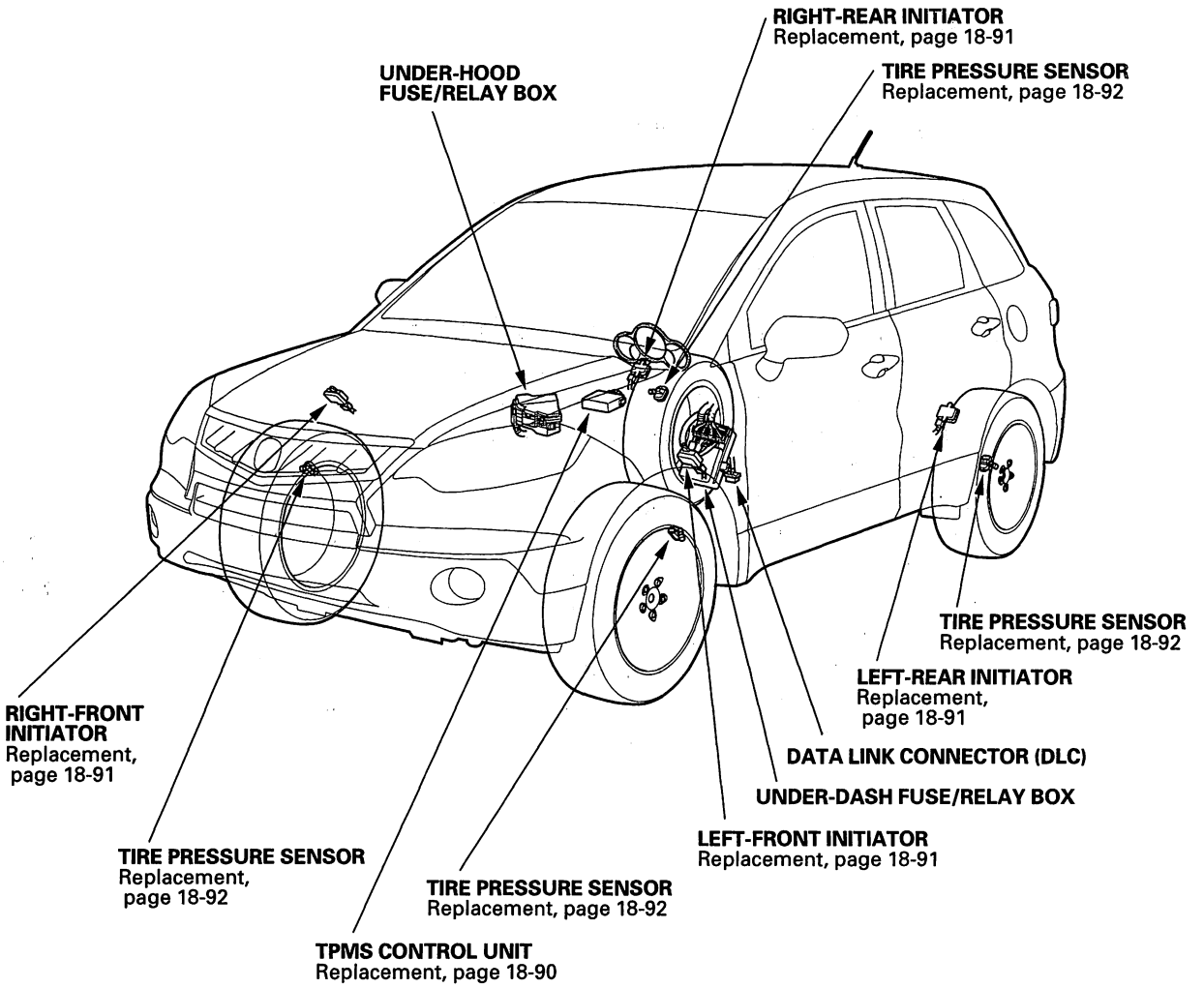




BACK

Protected by AR



# General Troubleshooting Information

## System Indicator Location

The system has six indicators.

- The low pressure indicator (A)
- The TPMS indicator (B)
- The right-front (RF) tire indicator (C)
- The left-front (LF) tire indicator (D)
- The right-rear (RR) tire indicator (E)
- The left-rear (LR) tire indicator (F)

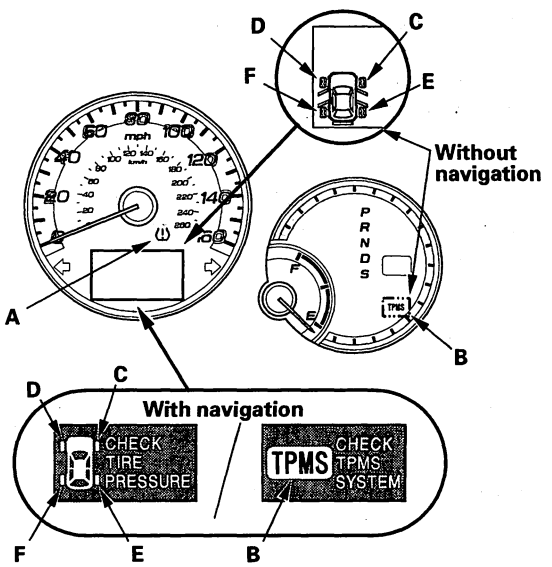


## How TPMS Works

The TPMS (tire pressure monitoring system) has many indicators; four tire indicators (shown on the multi-information display), a low pressure indicator (LED indicator), and a TPMS indicator (With navigation: On the multi-information display, Without navigation: LED indicator). When the TPMS control unit detects low pressure in a tire, or a problem in the system, it turns on the appropriate indicator(s).

- If low tire pressure is detected, the low pressure indicator and the appropriate tire indicator(s) come on.
- If a problem in the system is detected, the TPMS indicator comes on.
- If low tire pressure and a problem in the system are detected, only the TPMS indicator comes on.

If the system is OK, the TPMS indicator (LED indicator type) and the low pressure indicator should come on when you turn the ignition switch ON (II), and then go off 2 seconds later. If they don't, there is a problem with the system.

If the system detects low pressure in any of the four tires, the low pressure indicator and the appropriate tire indicator(s) will come on, and the control unit will set one or more of these codes:
DTC 11, 13, 15, 17. When the tire pressure returns to normal, the control unit will turn off the indicators and store the DTC(s). However, if the control unit detects a problem in the system during an indication of low tire pressure, it will turn off the low pressure indicator and tire indicators, store the DTC(s), and turn on the TPMS indicator.

NOTE: Tire pressures will increase slightly as the temperature in the tires rises during driving at highway speeds. Pressures will also increase or decrease slightly with changes in outside air temperature.
A temperature change of about 18 °F (10 °C) will change tire pressure by about 10 kPa (0.1 kgf/cm$^2$, 1.5 psi). If the temperature drops, tire pressure could decrease just enough to turn on the low pressure indicator and tire indicator(s), but later as tire temperature increases enough to turn them off. To resolve a complaint of such intermittent indications, confirm and clear the stored DTC(s) and check the tire pressures. Then explain to the customer how temperature changes can affect the system, especially when tire pressures are near the low end of the TPMS normal range - 168 to 220 kPa (1.7 to 2.2 kgf/cm$^2$, 24 to 32 psi).

If a problem is detected in the system, the TPMS indicator will come on and stay on until the system returns to normal with most DTCs. If DTC 45, 61, 63, 65, 67, 81, 83, or 85 is set, the TPMS indicator will go off only when the ignition switch is turned off.

If a flat tire is replaced with the spare tire, and the flat tire is stored in the trunk area or the cabin, the low pressure indicator will stay on but the appropriate tire indicator will go off. This prevents the customer from thinking there is a problem with the spare tire. When the flat tire is taken out of the vehicle for repair, the TPMS indicator will come on (DTC 32, 34, 36, or 38) because the system is no longer receiving the signal from the tire's transmitter.

(cont'd)

Protected by AR



## General Troubleshooting Information (cont'd)

### Problems That Are Not System Faults

- Tire Sealant
  Fluid sealant used to repair a punctured tire can damage the tire pressure sensor mounted on each wheel. It can prevent the system from detecting the correct tire pressure, which sets a DTC 11, 13, 15, or 17 even though the system is normal.
- Cold Weather
  When the weather is extremely cold - about −40 °F (−40 °C) or colder - the output of the lithium battery in each tire pressure sensor may drop far enough that the control unit sets a DTC for low battery voltage (31, 33, 35, or 37) even though the system is normal.
- Non-TPMS Wheels
  Vehicles equipped with TPMS must use wheels made for the system. Every TPMS wheel has an exclusive mark; do not use any other type of wheel.

### How a Diagnostic Trouble Code (DTC) is Set

- When the system detects a problem, the TPMS control unit sets a code, but shifts to fail-safe mode, and will not alert the driver to low tire pressures.
- If the TPMS control unit loses power, or fails, the TPMS indicator will come on, but no DTC will be set.
- The memory can hold all the DTCs that could possibly be set. However, when the same DTC is detected more than once, the most recent one overwrites the previous one, so only the latest DTC of each type is stored.
- DTCs are indicated in ascending order, not in the order they occurred.
- Set DTCs are stored in the EEPROM (nonvolatile memory), they cannot be cleared by disconnecting the battery. To clear a DTC, connect the HDS (Honda Diagnostic System) to the data link connector (DLC), and follow the screen prompts.

### How to Troubleshoot DTCs

DTC troubleshooting procedures assume the cause of the problem is still present and the TPMS indicator is still on. (NOTE: The TPMS indicator comes on for DTCs 11, 13, 15, and 17 only if the low tire pressure indication is false, caused by a problem in the system.) Do not use a troubleshooting procedure unless the system has set the DTC listed for it.

1. Ask the customer to describe the conditions when the indicator came on, and try to reproduce the same conditions for troubleshooting. Find out if the customer checked and/or adjusted tire pressures since the indicator came on.

2. If an indicator does not come on during the test-drive, check for loose terminals, poor contact due to damaged terminals, etc. before you start troubleshooting.

3. After troubleshooting, clear the DTCs, and test-drive the vehicle. Make sure no indicators come on.

4. Check for other unit DTCs which are connected via F-CAN, if there are DTCs that are related to F-CAN, the most likely cause was that the ignition switch was turned ON (II) with the TPMS control unit connector disconnected. Clear the DTCs. Check for PGM-FI and TPMS codes, and troubleshoot those first.



BACK

Protected by AR



## How to Retrieve DTCs

1. With the ignition switch OFF, connect the HDS (Honda Diagnostic System) to the data link connector (DLC) (A) located under the driver's side of the dashboard.

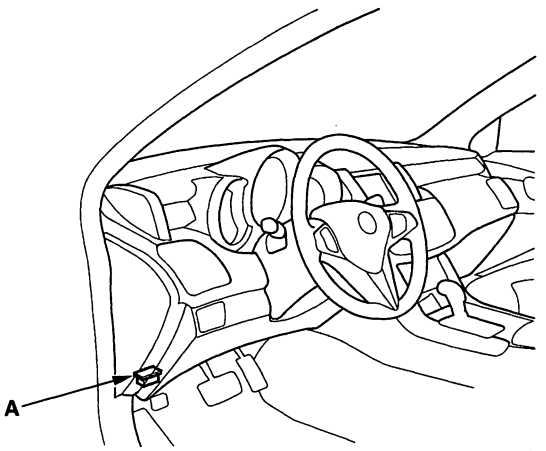


2. Turn the ignition switch ON (II).
3. Make sure the HDS communicates with the vehicle and the TPMS control unit. If it doesn't, troubleshoot the DLC circuit (see page 11-229).
4. Follow the prompts on the HDS to display the DTC(s) on the screen. After determining the DTC, refer to the DTC Troubleshooting.

   NOTE: See the HDS Help menu for specific instructions.
5. Turn the ignition switch OFF.

## How to Clear DTCs

1. With the ignition switch OFF, connect the HDS to the data link connector (DLC) (A) located under the dash on the driver's side of the dashboard.

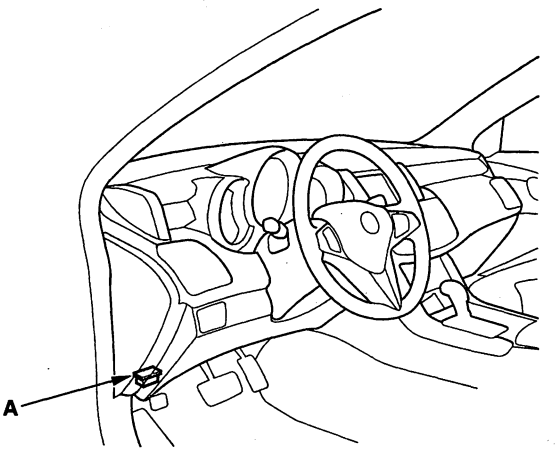


2. Turn the ignition switch ON (II).
3. Make sure the HDS communicates with the vehicle and the TPMS control unit. If it doesn't, troubleshoot the DLC circuit (see page 11-229).
4. Clear the DTC(s) by following the screen prompts on the HDS.

   NOTE: See the HDS Help menu for specific instructions.
5. Turn the ignition switch OFF.

Protected by AR



# Memorizing the Tire Pressure Sensor ID

## Memorizing a Tire Pressure Sensor ID

When a tire pressure sensor is replaced, the sensor ID must be memorized by the TPMS control unit.

NOTE: To ensure the control unit memorizes the correct ID, the vehicle with the new sensor must be at least 10 ft (3 m) from any other TPMS pressure sensor not installed on that vehicle.

## Memorizing a Sensor ID Automatically

After rotating the tires or replacing a tire pressure sensor, drive the vehicle for at least 40 seconds at a speed of 15 mph (24 km/h) or more, and all the sensor IDs will be memorized automatically.

NOTE:
- When replacing the TPMS control unit, use the HDS to memorize IDs.
- After the IDs are memorized, reduce the pressure in all four tires to less than the appropriate specification, and check to see that the four tire indicators come on.

## Memorize the ID with the HDS

The HDS can memorize the ID of a new tire pressure sensor or a previously memorized ID.

1. With the ignition switch OFF, connect the HDS to the data link connector (DLC) (A) located under the driver's side of the dashboard.

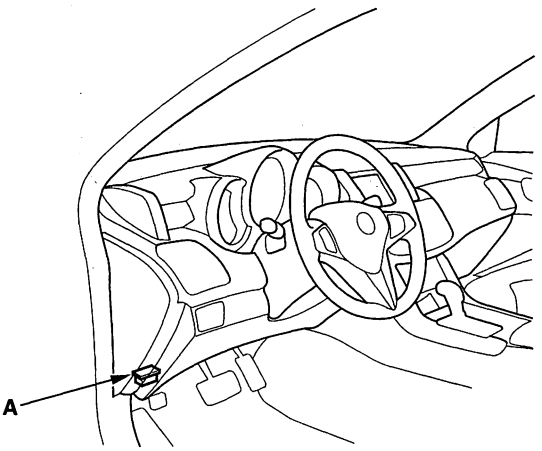


2. Turn the ignition switch ON (II).

3. Make sure the HDS communicates with the vehicle and the TPMS control unit. If it doesn't, troubleshoot the DLC circuit (see page 11-229).

4. Memorize the ID of the tire pressure sensor by following the screen prompts on the HDS.

   NOTE:
   - See the HDS Help menu for specific instructions.
   - When replacing the TPMS control unit, use the HDS to memorize IDs.
   - After the IDs are memorized, reduce the pressure in all four tires to less than the appropriate specification, and check to see that the four tire indicators come on.



BACK

Protected by AR



## DTC Troubleshooting Index

| DTC | Detection Item | Troubleshooting |
|---|---|---|
| 11 | Right-front low tire pressure | (see page 18-67) |
| 13 | Left-front low tire pressure | (see page 18-67) |
| 15 | Right-rear low tire pressure | (see page 18-67) |
| 17 | Left-rear low tire pressure | (see page 18-67) |
| 21 | Right-front abnormally high tire sensor temperature | (see page 18-68) |
| 22 | Left-front abnormally high tire sensor temperature | (see page 18-68) |
| 23 | Right-rear abnormally high tire sensor temperature | (see page 18-68) |
| 24 | Left-rear abnormally high tire sensor temperature | (see page 18-68) |
| 31 | Right-front tire pressure sensor low battery voltage | (see page 18-68) |
| 32 | Right-front tire pressure sensor transmitting failure | (see page 18-69) |
| 33 | Left-front tire pressure sensor low battery voltage | (see page 18-68) |
| 34 | Left-front tire pressure sensor transmitting failure | (see page 18-69) |
| 35 | Right-rear tire pressure sensor low battery voltage | (see page 18-68) |
| 36 | Right-rear tire pressure sensor transmitting failure | (see page 18-69) |
| 37 | Left-rear tire pressure sensor low battery voltage | (see page 18-68) |
| 38 | Left-rear tire pressure sensor transmitting failure | (see page 18-69) |
| 41 | Abnormal signal reception error | (see page 18-73) |
| 45 | Initiator circuit short detection | (see page 18-74) |
| 51 | Right-front initialization status of TPMS control unit is not-completed | (see page 18-76) |
| 53 | Left-front initialization status of TPMS control unit is not-completed | (see page 18-76) |
| 55 | Right-rear initialization status of TPMS control unit is not-completed | (see page 18-76) |
| 57 | Left-rear initialization status of TPMS control unit is not-completed | (see page 18-76) |
| 61 | Right-front initiator circuit open detection | (see page 18-80) |
| 63 | Left-front initiator circuit open detection | (see page 18-80) |
| 65 | Right-rear initiator circuit open detection | (see page 18-80) |
| 67 | Left-rear initiator circuit open detection | (see page 18-80) |
| 81 | TPMS control unit failure check | (see page 18-83) |
| 83 | No VSP signal | (see page 18-83) |
| 85 | CAN data error | (see page 18-84) |
| 91 | Right-front tire pressure sensor internal error | (see page 18-85) |
| 93 | Left-front tire pressure sensor internal error | (see page 18-85) |
| 95 | Right-rear tire pressure sensor internal error | (see page 18-85) |
| 97 | Left-rear tire pressure sensor internal error | (see page 18-85) |

Protected by AR



## Symptom Troubleshooting Index

| Symptom | Diagnostic procedure | Also check for |
|---|---|---|
| HDS does not communicate with the TPMS control unit or the vehicle | Troubleshoot the DLC circuit (see page 11-229) | |
| Low pressure indicator does not come on, and no DTCs are stored | Symptom Troubleshooting (see page 18-86) | |
| Low pressure indicator does not go off, and no DTCs are stored | Symptom Troubleshooting (see page 18-87) | |
| TPMS indicator does not come on, and no DTCs are stored | Symptom Troubleshooting (see page 18-87) | |
| TPMS indicator does not go off, and no DTCs are stored | Symptom Troubleshooting (see page 18-88) | |



BACK

Protected by AR



# System Description

## TPMS Control Unit Inputs and Outputs 20P Connector

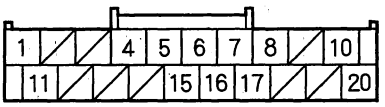


Wire side of female terminals

| Terminal number | Wire color | Terminal sign (Terminal name) | Description | Signal | | |
|---|---|---|---|---|---|---|
| | | | | Terminal | Conditions | Voltage |
| 1 | WHT | CAN H (CAN communication signal high) | Sends the communication signal | ——— | Ignition switch ON (II) | Pulses |
| 4 | BLK | GND (Ground) | Ground for the TPMS control unit | 4—GND | At all times | Less than 0.1 V |
| 5 | ORN | LF LF SIG. (LF low frequency signal) | Detects the signal from the left-front initiator | 5—GND | For the first 5—16 seconds after turning the ignition switch ON (II) | Pulses 0—2 V |
| | | | | | With ignition switch ON (II) for more than 5—16 seconds | Less than 0.1 V |
| 6 | GRY | RF LF SIG. (RF low frequency signal) | Detects the signal from the right-front initiator | 6—GND | For the first 5—16 seconds after turning the ignition switch ON (II) | Pulses 0—2 V |
| | | | | | With ignition switch ON (II) for more than 5—16 seconds | Less than 0.1 V |
| 7 | LT BLU | K-LINE (Data link connector) | Communications with the HDS | ——— | ——— | ——— |
| 8 | BRN | IG1 (Ignition switch 1) | Power source for activating the system | 8—GND | Ignition switch ON (II) | Battery voltage |
| | | | | | Ignition switch OFF | Less than 0.1 V |
| 10 | RED | +B (Battery positive) | Power source for the TPMS control unit | 10—GND | At all times | Battery voltage |

(cont'd)

Protected by AR



## System Description (cont'd)

### TPMS Control Unit Inputs and Outputs 20P Connector

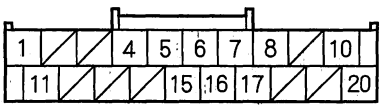


Wire side of female terminals

| Terminal number | Wire color | Terminal sign (Terminal name) | Description | Signal | | |
|---|---|---|---|---|---|---|
| | | | | Terminal | Conditions | Voltage |
| 11 | RED | CAN L (CAN communication signal low) | Sends the communication signal | ——— | Ignition switch ON (II) | Pulses |
| 15 | GRN | LF GND (LF low frequency ground) | Ground for the initiators | 15—GND | Ignition switch ON (II) | Less than 0.1 V |
| 16 | PNK | LR LF SIG. (LR low frequency signal) | Detects the signal from the left-rear initiator | 16—GND | For the first 5—16 seconds after turning the ignition switch ON (II) | Pulses 0—2 V |
| | | | | | With ignition switch ON (II) for more than 5—16 seconds | Less than 0.1 V |
| 17 | WHT | RR LF SIG. (RR low frequency signal) | Detects the signal from the right-rear initiator | 17—GND | For the first 5—16 seconds after turning the ignition switch ON (II) | Pulses 0—2 V |
| | | | | | With ignition switch ON (II) for more than 5—16 seconds | Less than 0.1 V |
| 20 | BLU | LF PWR. (LF low frequency power) | Power source for the initiators | 20—GND | For 5 seconds with ignition switch ON (II) | About 7 V |
| | | | | | After 5 seconds with ignition switch ON (II) | ——— |



BACK

Protected by AR



## System Structure

Whenever the engine is running, the TPMS control unit continuously monitors all four tires and the system. If it detects low pressure in a tire, it alerts the driver by turning on the low pressure indicator and the appropriate tire indicator. If it detects a problem in the system, it turns on the TPMS indicator.

**Initiators**
Mounted on each wheel well, each initiator sends a start/stop signal to the tire pressure sensor in the tire below it.

**Control unit**
Mounted back of the driver's side of the lower dash, the control unit sends signals to the initiators and receives signals from them to verify pressure sensor IDs every time the engine starts. It also receives signals from the transmitters in the tire pressure sensors, and it continuously monitors and controls the system.

**Indicators**
All indicators are in the gauge control module: The low pressure indicator (LED indicator), four tire indicators (on the multi-information display) to show which tire is affected, and the TPMS indicator (With navigation: On the multi-information display, Without navigation: LED indicator) that comes on only if there's a problem with the system. When two or more tire pressures are low, the low pressure indicator comes on about 5 seconds before the appropriate tire indicator. Once low pressure is detected, the system scans all four pressure sensors to ensure that it turns on the correct tire indicator.

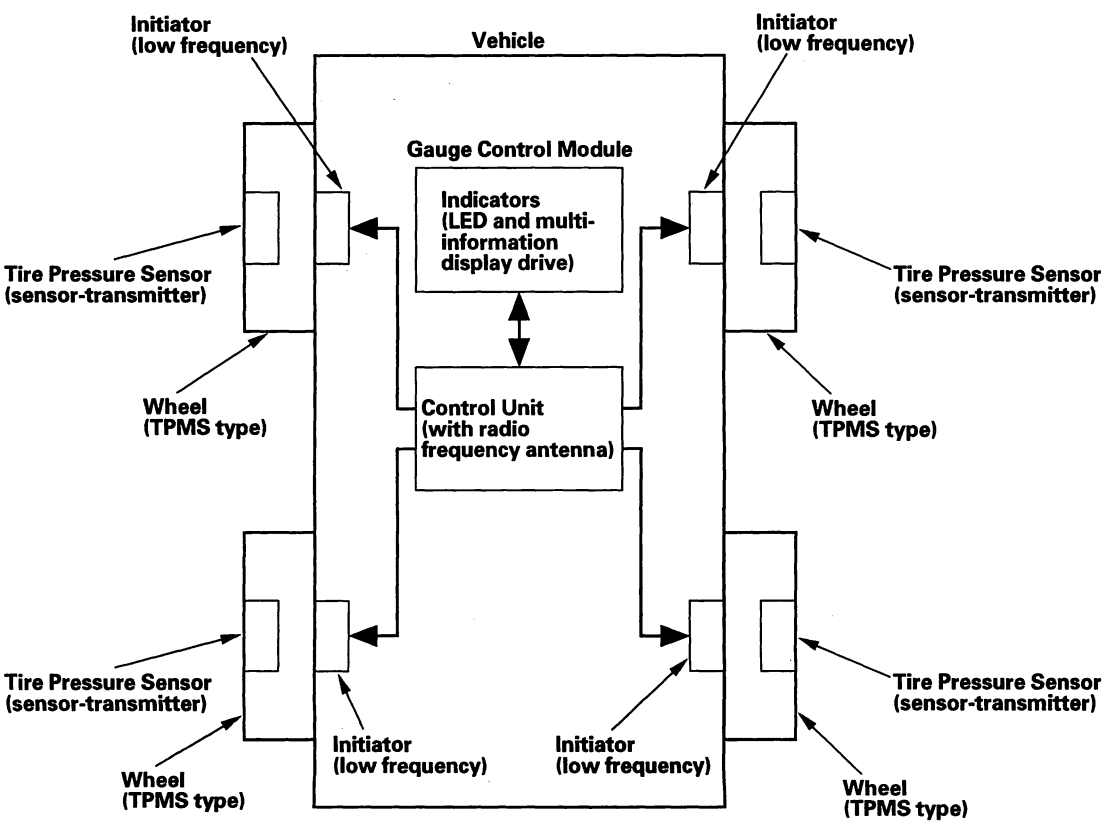


(cont'd)

Protected by AR



## System Description (cont'd)

**Tire pressure sensor**
Each sensor is an integrated unit made up of the tire valve stem, a pressure sensor, and a transmitter. The unit is attached to the inside of the wheel, around the valve stem. The sensor transmits the internal tire information one time every 60 seconds to the control unit. When TPMS control unit receives tire pressure is less than 175 kPa (1.8 kgf/cm$^2$, 25 psi), the control unit then turns on the low pressure indicator and the appropriate tire(s) indicator. When that tire's pressure is increased to more than 198 kPa (2.0 kgf/cm$^2$, 29 psi), the transmitter sends tire pressure to the control unit, and then the control unit turns the indicators off.

**Wheels**
TPMS will not work unless TPMS type wheels are installed on the vehicle. The original equipment wheels have a "STK" stamp (A) on the back of the wheel and a TPMS mark (B) on the wheel rim periphery, and a counterweights (C) cast into the opposite side of the spoke to balance the weight of the tire pressure sensor (D).

NOTE: The vehicle is equipped with either wheel as shown.

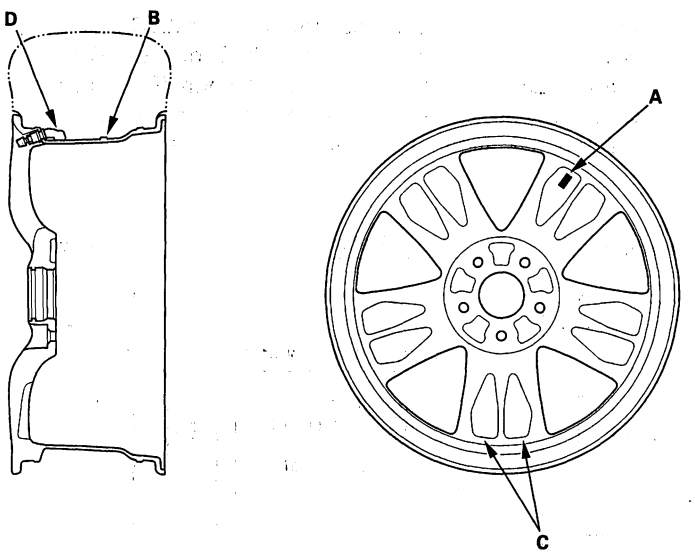


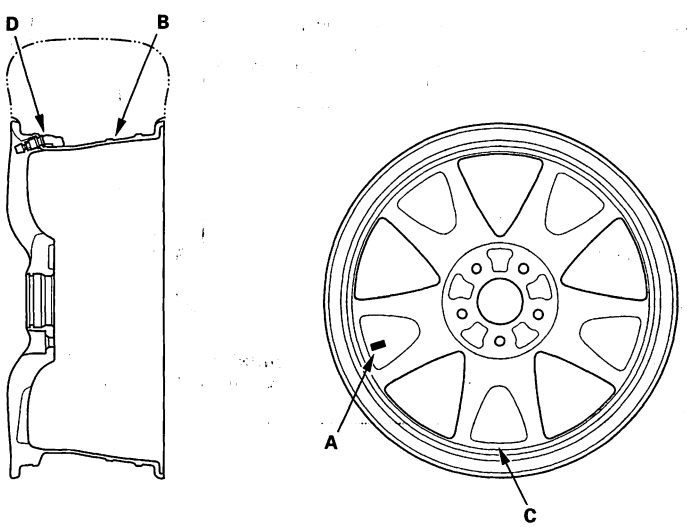




BACK

Protected by AR



## System Communication

- When the vehicle is running, an RF (radio frequency) band wave signal is continuously transmitted from each tire pressure sensor to the control unit.
- When the ignition switch is turned ON (II), the initiators send an LF (low frequency) band wave signal to the tire pressure sensors, switching them from sleep mode to normal function mode. When the ignition switch is turned OFF, the sensors switch from normal function mode back to sleep mode to extend their battery life.
- Each tire pressure sensor has its own ID to prevent jamming by similar systems on other vehicles. After memorizing all the sensor IDs, the control unit receives only those specific signals.
- An ID can be memorized manually or automatically. Each initiator is hardwired to the control unit. Every time the ignition is turned ON (II), the control unit asks each initiator for a sensor ID. The initiators then transmit the sensor IDs, and the control unit receives and memorizes them. The control unit then knows which ID belongs to each tire location. This recurring ID confirmation prevents any confusion in the system as a result of normal tire rotation.

NOTE: Be careful not to bend the brackets on the TPMS control unit and front initiators: Misalignment of the control unit and initiators could interfere with sending and receiving signals.

**Control Unit**
**(with Radio Frequency Antenna)**

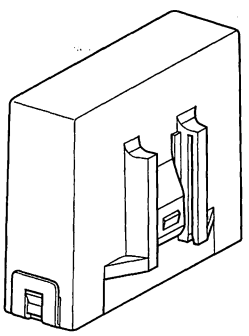

**Initiator**
**(Low Frequency Initiator)**

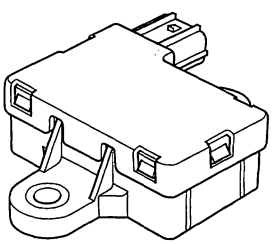

**Tire Pressure Sensor**
**(Sensor-transmitter)**

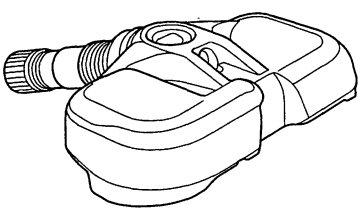

Protected by AR



## Circuit Diagram

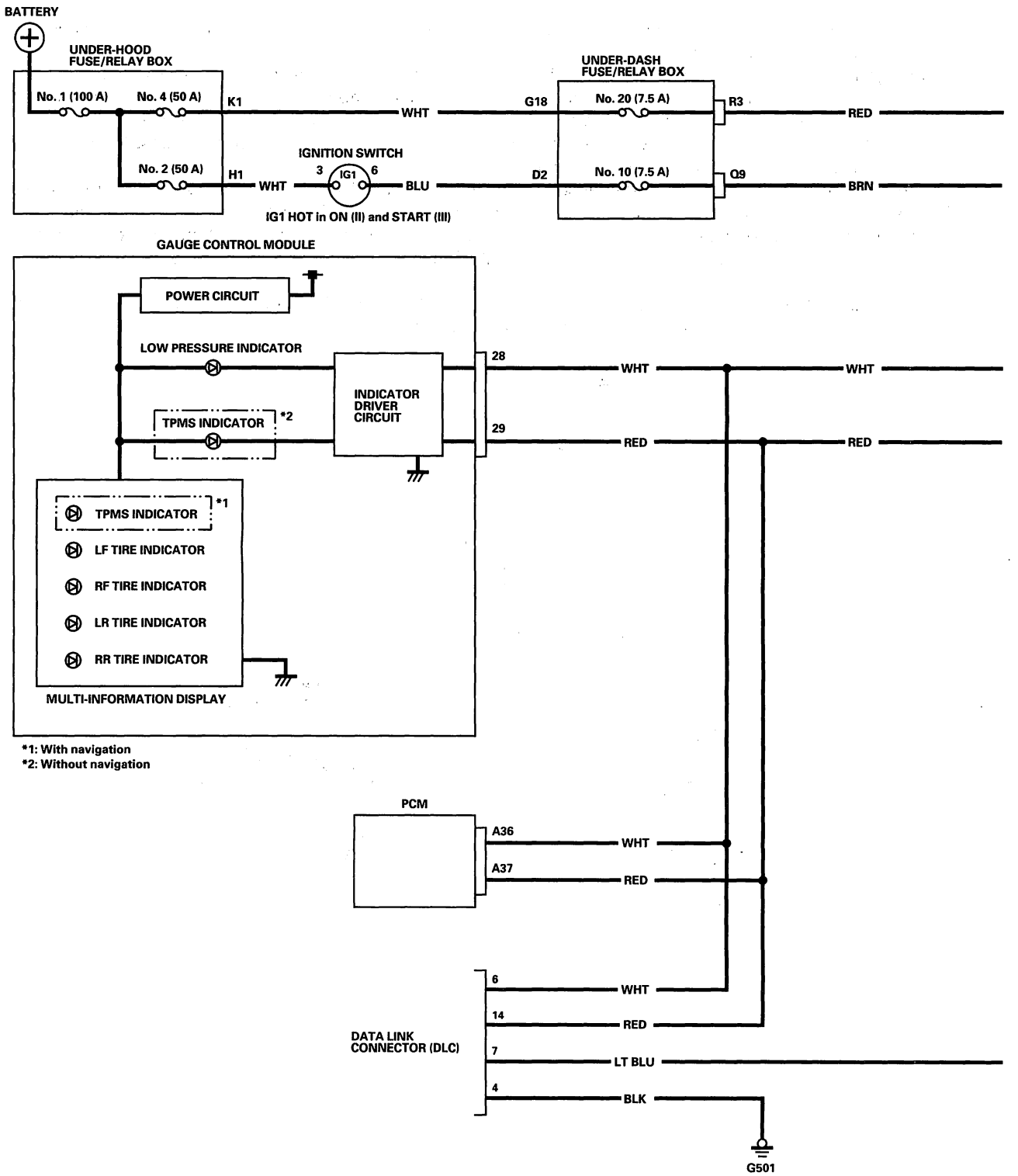




BACK

Protected by AR



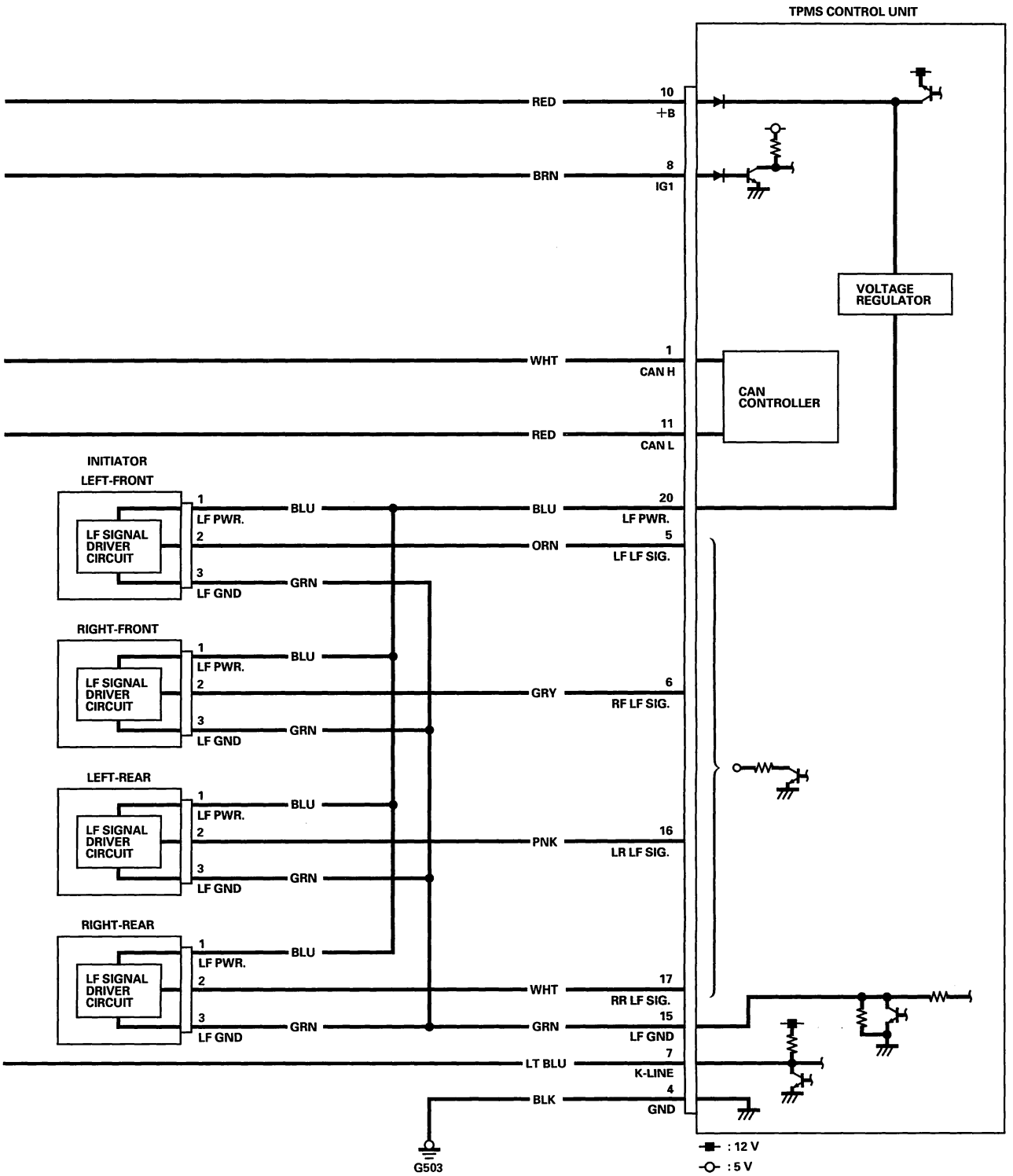


(cont'd)

BACK

Protected by AR



## Circuit Diagram (cont'd)

**UNDER-DASH FUSE/RELAY BOX CONNECTOR Q (16P)**

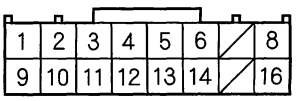


**UNDER-DASH FUSE/RELAY BOX CONNECTOR R (20P)**

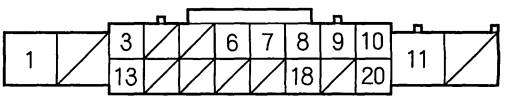


**GAUGE CONTROL MODULE 36P CONNECTOR**

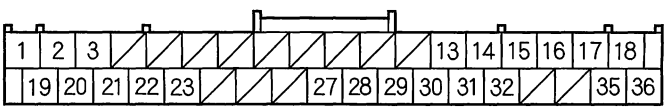


**TPMS CONTROL UNIT 20P CONNECTOR**

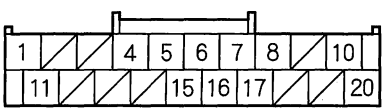


**INITIATOR 3P CONNECTOR**

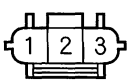


Wire side of female terminals

**PCM CONNECTOR A (44P)**

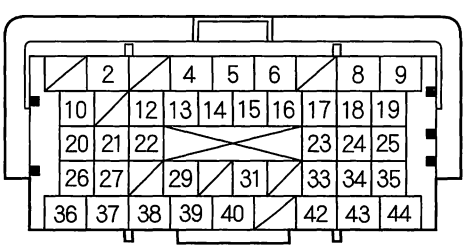


**DATA LINK CONNECTOR (DLC)**

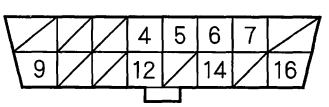


Terminal side of female terminals



BACK

Protected by AR



# DTC Troubleshooting

## DTC 11, 13, 15, 17: Low Tire Pressure

NOTE: If low tire pressure is detected, the control unit will set one or more of these DTCs, and turn on the low pressure indicator and the appropriate tire indicator(s). If the low pressure and tire indicators come on due to true low tire pressure, and the customer corrects it before bringing the vehicle in, the DTCs will have been stored, but all the indicators will be off.

1. Turn the ignition switch ON (II).

2. Check which tire indicator is on.

   NOTE: If no tire indicators are on, retrieve the DTCs with the HDS.

| DTC | Tire location |
|---|---|
| 11 | Right-front |
| 13 | Left-front |
| 15 | Right-rear |
| 17 | Left-rear |

3. Turn the ignition switch OFF.

4. Check the pressure of the indicated tire.

   *Is there 175 kPa (1.8 kgf/cm², 25 psi) or less?*

   **YES**—Go to step 5.

   **NO**—Go to step 7.

5. Check for and repair the cause of air loss, and then inflate the tire (see page 18-5).

6. Turn the ignition switch ON (II).

   *Do the tire indicators go off within one minute?*

   **YES**—The system is OK at this time. Clear the DTC with the HDS. ■

   **NO**—Go to step 7.

7. Check and monitor the value of the appropriate tire pressure with the HDS.

   NOTE: If not defined is shown on the HDS, turn the ignition switch OFF, rotate the tire 1/4 turn, then turn the ignition switch ON (II), and try again. If not defined is still shown, repeat the procedure in the previous sentence until NORMAL is shown.

   *Is the indicated tire pressure on the HDS within 40 kPa (0.4 kgf/cm², 6 psi) of the actual tire pressure?*

   **YES**—Check for loose terminals and poor connections at the TPMS control unit. If necessary, substitute a known-good TPMS control unit (see page 18-90), and recheck. ■

   **NO**—Check that the tire-pressure sensor is properly mounted. Replace the appropriate tire pressure sensor (see page 18-92). ■

Protected by AR



## DTC Troubleshooting (cont'd)

### DTC 21, 22, 23, 24: Abnormally High Tire Sensor Temperature

1. Make sure the tires have cooled down.

2. Turn the ignition switch ON (II).

3. Check the tire indicated by the DTCs you retrieved.

   NOTE: An abnormal rise in the internal temperature of the tires can be caused by
   - Excessive braking
   - Failure to release the parking brake (rear tires only)
   - Leaving the vehicle running while parked
   - Improper assembly of a wheel and tire

| DTC | Tire location |
|---|---|
| 21 | Right-front |
| 22 | Left-front |
| 23 | Right-rear |
| 24 | Left-rear |

4. Turn the ignition switch ON (II).

   *Does the TPMS indicator go off within one minute?*

   **YES**—The system is OK at this time. Clear the DTC with the HDS.■

   **NO**—Go to step 5..

5. Read the internal temperature of the tire with the HDS.

   NOTE: If not defined is shown on the HDS, turn the ignition switch OFF, rotate the tire 1/4 turn, then turn the ignition switch ON (II), and try again. If not defined is still shown, repeat the procedure in the previous sentence until NORMAL is shown.

   *Is 176 °F (80 °C) or more indicated?*

   **YES**—Replace the appropriate tire pressure sensor (see page 18-92).■

   **NO**—Check for loose terminals and poor connections at the TPMS control unit. If necessary, substitute a known-good TPMS control unit (see page 18-90), and recheck.■

### DTC 31, 33, 35, 37: Tire Pressure Sensor Low Battery Voltage

NOTE: This problem occurs when the temperature around the sensor is —40 °F (—40 °C) or less. Note that the diagnosis must be made in a place where ambient temperature is —4 °F (—20 °C) or more.

1. Turn the ignition switch ON (II).

   *Does the TPMS indicator go off within one minute?*

   **YES**—The system is OK at this time. Clear the DTC with the HDS.■

   **NO**—Go to step 2.

2. Check the FR, FL, RR, or RL in the TPMS DATA LIST with the HDS.

   NOTE: If not defined is shown on the HDS, turn the ignition switch OFF, rotate the tire 1/4 turn, then turn the ignition switch ON (II), and try again. If not defined is still shown, repeat the procedure in the previous sentence until NORMAL is shown.

| DTC | Tire location |
|---|---|
| 31 | Right-front |
| 33 | Left-front |
| 35 | Right-rear |
| 37 | Left-rear |

   *Is LOW indicated?*

   **YES**—Replace the appropriate tire pressure sensor (see page 18-92).■

   **NO**—Check for loose terminals and poor connections at the TPMS control unit. If necessary, substitute a known-good TPMS control unit (see page 18-90), and recheck.■



BACK

Protected by AR



## DTC 32, 34, 36, 38: Tire Pressure Sensor Transmitting Failure

NOTE: Inspect for an aftermarket device interfering with the RF signal from the sensors when turning the ignition switch ON (II).

1. Check the indicated location to make sure the wheel is a TPMS type with the tire pressure sensor.

| DTC | Tire location |
|---|---|
| 32 | Right-front |
| 34 | Left-front |
| 36 | Right-rear |
| 38 | Left-rear |

*Is a TPMS type wheel with a tire pressure sensor mounted on the vehicle?*

**YES**—Go to step 10.

**NO**—Go to step 2.

2. Install a known-good TPMS wheel.

3. To memorize the sensor ID, drive the vehicle above 15 mph (24 km/h) for 40 continuous seconds, or memorize the ID with the HDS (see page 18-56).

4. Test-drive the vehicle.

5. Check the VSP in the TPMS DATA LIST with the HDS.

*Is the vehicle speed indicated?*

**YES**—Go to step 9.

**NO**—Go to step 6.

6. Turn the ignition switch OFF.

7. Turn the ignition switch ON (II).

8. Check for DTCs with the HDS.

*Is DTC 85 indicated?*

**YES**—Go to the DTC 85 troubleshooting (see page 18-84). ■

**NO**—Check for loose terminals and poor connections at the TPMS control unit. If necessary, substitute a known-good TPMS control unit (see page 18-90), and recheck. ■

9. Turn the ignition switch OFF.

10. Turn the ignition switch ON (II).

11. With the HDS, check the indicated tire for the tire sensor status changing to normal.

NOTE: If not defined is shown on the HDS, turn the ignition switch OFF, rotate the tire 1/4 turn, then turn the ignition switch ON (II), and try again. If status does not change to normal, repeat the procedure in the previous sentence until NORMAL is shown.

| DTC | Tire location |
|---|---|
| 32 | Right-front |
| 34 | Left-front |
| 36 | Right-rear |
| 38 | Left-rear |

*Is NORMAL indicated within one full turn of the tire?*

**YES**—The system is OK at this time. Clear the DTC with the HDS. ■

**NO**—Go to step 12.

(cont'd)

Protected by AR



## DTC Troubleshooting (cont'd)

12. Turn the ignition switch OFF.

13. Install a wheel with a known-good tire pressure sensor on the vehicle.

14. To memorize the sensor ID, drive the vehicle above 15 mph (24 km/h) for 40 continuous seconds, or memorize the ID with the HDS (see page 18-56).

15. Turn the ignition switch OFF.

16. Turn the ignition switch ON (II).

17. With the HDS, check the indicated tire for a normal pressure sensor signal.

    NOTE: If not defined is shown on the HDS, turn the ignition switch OFF, rotate the tire 1/4 turn, then turn the ignition switch ON (II), and try again. If not defined is still shown, repeat the procedure in the previous sentence until NORMAL is shown.

| DTC | Tire location |
|---|---|
| 32 | Right-front |
| 34 | Left-front |
| 36 | Right-rear |
| 38 | Left-rear |

*Is NORMAL indicated within one full turn of the tire?*

**YES**—Replace the tire pressure sensor on the customer's wheel (see page 18-92).■

**NO**—Go to step 18.

18. Turn the ignition switch OFF.

19. Disconnect the appropriate initiator 3P connector.

| DTC | Initiator location |
|---|---|
| 32 | Right-front |
| 34 | Left-front |
| 36 | Right-rear |
| 38 | Left-rear |

20. Disconnect the TPMS control unit 20P connector.

21. Check for continuity between TPMS control unit 20P connector terminal No. 20 and the appropriate initiator 3P connector terminal No. 1.

| DTC | Initiator location |
|---|---|
| 32 | Right-front |
| 34 | Left-front |
| 36 | Right-rear |
| 38 | Left-rear |

**TPMS CONTROL UNIT 20P CONNECTOR**
Wire side of female terminals

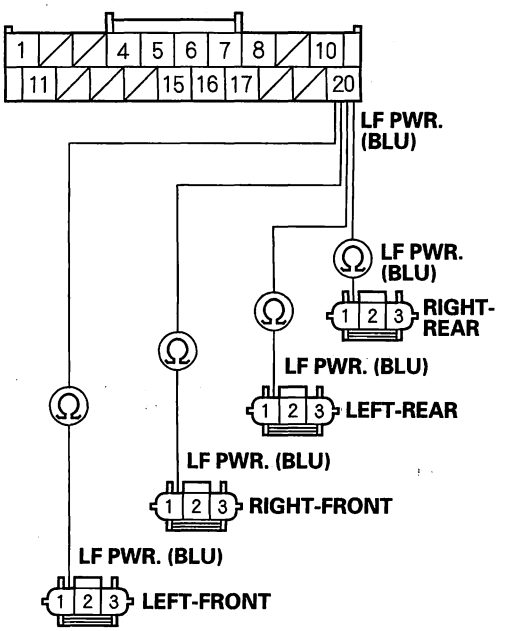


**INITIATOR 3P CONNECTOR**
Wire side of female terminals

*Is there continuity?*

**YES**—Go to step 22.

**NO**—Repair open in the wire between the TPMS control unit and the appropriate initiator.■



BACK

Protected by AR



22. Check for continuity between TPMS control unit 20P connector terminal No. 15 and appropriate initiator 3P connector terminal No. 3.

| DTC | Initiator location |
|---|---|
| 32 | Right-front |
| 34 | Left-front |
| 36 | Right-rear |
| 38 | Left-rear |

**TPMS CONTROL UNIT 20P CONNECTOR**
Wire side of female terminals

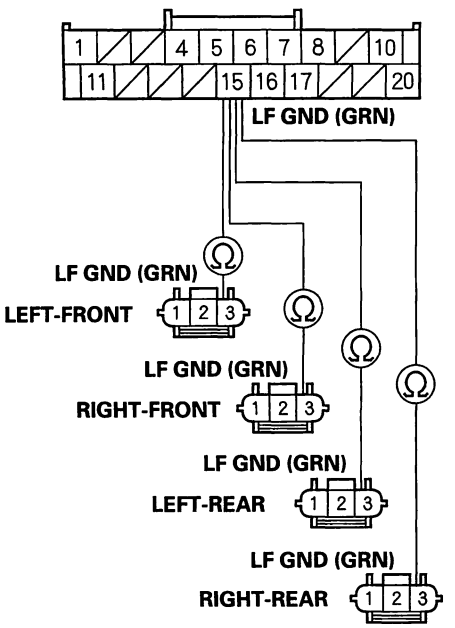


**INITIATOR 3P CONNECTOR**
Wire side of female terminals

*Is there continuity?*

**YES**—Go to step 23.

**NO**—Repair open in the wire between the TPMS control unit and the appropriate initiator.■

23. Check for continuity between the TPMS control unit 20P connector appropriate terminal and appropriate initiator 3P connector terminal No. 2 (see table).

| DTC | TPMS control unit terminal | Initiator location |
|---|---|---|
| 32 | No. 6 | Right-front |
| 34 | No. 5 | Left-front |
| 36 | No. 17 | Right-rear |
| 38 | No. 16 | Left-rear |

**INITIATOR 3P CONNECTOR**
Wire side of female terminals

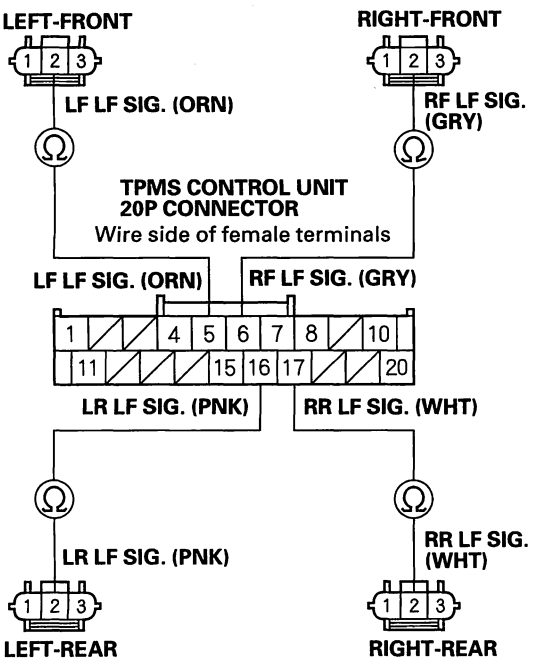


**INITIATOR 3P CONNECTOR**
Wire side of female terminals

*Is there continuity?*

**YES**—Go to step 24.

**NO**—Repair open in the wire between the TPMS control unit and the appropriate initiator.■

(cont'd)

Protected by AR



## DTC Troubleshooting (cont'd)

24. Check for continuity between body ground and the TPMS control unit 20P connector appropriate terminal (see table).

| DTC | TPMS control unit terminal |
|---|---|
| 32 | No. 6 |
| 34 | No. 5 |
| 36 | No. 17 |
| 38 | No. 16 |

**TPMS CONTROL UNIT 20P CONNECTOR**

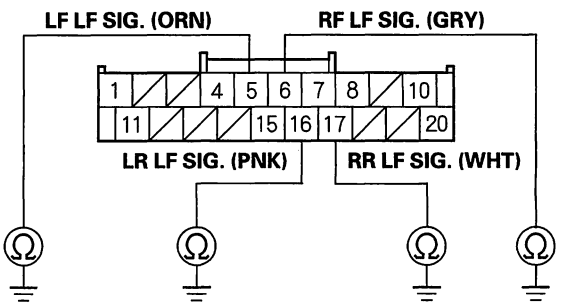


Wire side of female terminals

*Is there continuity?*

**YES**—Repair short to body ground in the wire between the TPMS control unit and the appropriate initiator. ■

**NO**—Go to step 25.

25. Measure the voltage between body ground and the TPMS control unit 20P connector appropriate terminal (see table).

| DTC | TPMS control unit terminal |
|---|---|
| 32 | No. 6 |
| 34 | No. 5 |
| 36 | No. 17 |
| 38 | No. 16 |

**TPMS CONTROL UNIT 20P CONNECTOR**

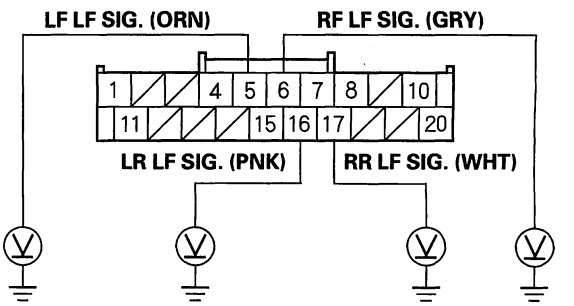


Wire side of female terminals

*Is there battery voltage?*

**YES**—Repair short to power in the wire between the TPMS control unit and the appropriate initiator. ■

**NO**—Replace the appropriate initiator (see page 18-91). ■



BACK

Protected by AR



## DTC 41: Abnormal Signal Reception Error

NOTE: Inspect for an aftermarket device interfering with the RF signal from the sensors when turning the ignition switch ON (II).

1. Check all four wheels to make sure they are the TPMS type with the tire pressure sensor.

   *Is each wheel a TPMS type with a tire pressure sensor mounted on the vehicle?*

   **YES**—Go to step 10.

   **NO**—Go to step 2.

2. Install known-good TPMS wheel(s).

3. To memorize the sensor ID(s), drive the vehicle above 15 mph (24 km/h) for 40 continuous seconds, or memorize the ID(s) with the HDS (see page 18-56).

4. Test-drive the vehicle.

5. Check the VSP in the TPMS DATA LIST with the HDS.

   *Is the vehicle speed indicated?*

   **YES**—Go to step 9.

   **NO**—Go to step 6.

6. Turn the ignition switch OFF.

7. Turn the ignition switch ON (II).

8. Check for DTCs with the HDS.

   *Is DTC 85 indicated?*

   **YES**—Go to the DTC 85 troubleshooting (see page 18-84). ■

   **NO**—Check for loose terminals and poor connections at the TPMS control unit. If necessary, substitute a known-good TPMS control unit (see page 18-90), and recheck. ■

9. Turn the ignition switch OFF.

10. Turn the ignition switch ON (II).

11. Check TPMS DATA LIST for LF, RF, LR, RR sensor status changing to "NORMAL".

    NOTE: If not defined is shown on the HDS, turn the ignition switch OFF, rotate the tire 1/4 turn, then turn the ignition switch ON (II), and try again. If not defined is still shown, repeat the procedure in the previous sentence until NORMAL is shown.

    *Is NORMAL indicated within one full turn of the tire?*

    **YES**—The system is OK at this time. Clear the DTC with the HDS. ■

    **NO**—Check for loose terminals and poor connections at the TPMS control unit. If necessary, substitute a known-good TPMS control unit (see page 18-90), and recheck. ■

Protected by AR



## DTC Troubleshooting (cont'd)

### DTC 45: Initiator Circuit Short Detection

1. Turn the ignition switch ON (II).
2. Clear the DTC with the HDS.
3. Turn the ignition switch OFF, then turn the ignition switch ON (II) again.
4. Check for DTCs with the HDS.

   *Is DTC 45 indicated?*

   **YES**—Go to step 5.

   **NO**—The system is OK at this time.■

5. Turn the ignition switch OFF.
6. Disconnect the TPMS control unit 20P connector.
7. Check for continuity between body ground and the TPMS control unit 20P connector terminal No. 20.

**TPMS CONTROL UNIT 20P CONNECTOR**

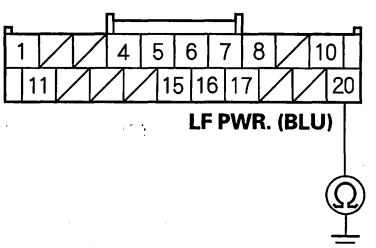


Wire side of female terminals

*Is there continuity?*

**YES**—Go to step 8.

**NO**—Go to step 11.

8. Disconnect all four the initiator 3P connectors.
9. Check for continuity between body ground and the TPMS control unit 20P connector terminal No. 20.

**TPMS CONTROL UNIT 20P CONNECTOR**

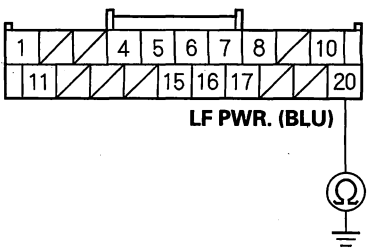


Wire side of female terminals

*Is there continuity?*

**YES**—Repair short to body ground in the wire between the TPMS control unit and the initiators.■

**NO**—Go to step 10.

10. On each individual initiator, check for continuity between body ground and the initiator 3P connector terminal No. 1.

    NOTE: Check the initiators when mounted on the vehicle.

**INITIATOR 3P CONNECTOR**

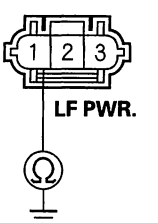


Terminal side of male terminals

*Is there continuity?*

**YES**—Replace the appropriate initiator (see page 18-91).■

**NO**—Check for loose terminals and poor connections at the TPMS control unit. If necessary, substitute a known-good TPMS control unit (see page 18-90), and recheck.■



BACK

Protected by AR



11. Check for continuity between TPMS control unit 20P connector terminal No. 15 and No. 20.

**TPMS CONTROL UNIT 20P CONNECTOR**

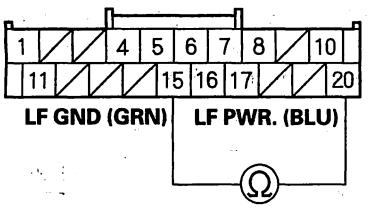


Wire side of female terminals

*Is there continuity?*

**YES**—Go to step 12.

**NO**—Go to step 15.

12. Disconnect all four initiator 3P connectors.

13. Check for continuity between TPMS control unit 20P connector terminal No. 15 and No. 20.

**TPMS CONTROL UNIT 20P CONNECTOR**

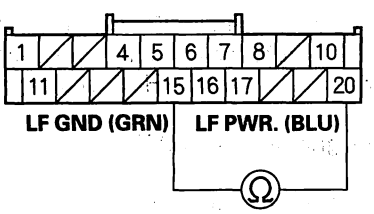


Wire side of female terminals

*Is there continuity?*

**YES**—Repair short in the wire between TPMS control unit 20P connector terminals No. 15 (LF GND line) and No. 20 (LF PWR. line).■

**NO**—Go to step 14.

14. On the initiator side, check for continuity between all four initiator 3P connector terminals No. 1 and No. 3 individually.

**INITIATOR 3P CONNECTOR**

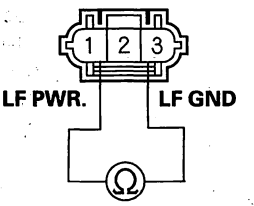


Terminal side of male terminals

*Is there continuity?*

**YES**—Replace the appropriate initiator (see page 18-91).■

**NO**—Check for loose terminals and poor connections at the TPMS control unit. If necessary, substitute a known-good TPMS control unit (see page 18-90), and recheck.■

15. Turn the ignition switch ON (II).

16. Measure the voltage between body ground and TPMS control unit 20P connector terminal No. 15.

**TPMS CONTROL UNIT 20P CONNECTOR**

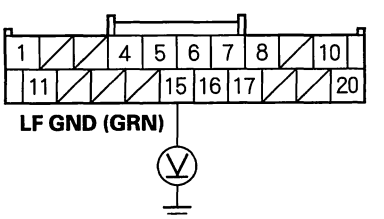


Wire side of female terminals

*Is there battery voltage?*

**YES**—Repair short to power in the wire between the TPMS control unit and the initiators.■

**NO**—Check for loose terminals and poor connections at the TPMS control unit. If necessary, substitute a known-good TPMS control unit (see page 18-90), and recheck.■

Protected by AR



## DTC Troubleshooting (cont'd)

### DTC 51, 53, 55, 57: Initialization Status of TPMS Control Unit is Not-completed

1. Check the indicated location to make sure the wheel is a TPMS type with the tire pressure sensor.

| DTC | Tire location |
|---|---|
| 51 | Right-front |
| 53 | Left-front |
| 55 | Right-rear |
| 57 | Left-rear |

*Is a TPMS type wheel with a tire pressure sensor mounted on the vehicle?*

**YES**—Go to step 7.

**NO**—Go to step 2.

2. Install a known-good TPMS wheel.

3. To memorize the sensor ID, drive the vehicle above 15 mph (24 km/h) for 40 continuous seconds, or memorize the ID with the HDS (see page 18-56).

4. Turn the ignition switch OFF.

5. Turn the ignition switch ON (II).

6. With the HDS, check the indicated tire for the normal sensor signal.

NOTE: If not defined is shown on the HDS, turn the ignition switch OFF, rotate the tire 1/4 turn, then turn the ignition switch ON (II), and try again. If not defined is still shown, repeat the procedure in the previous sentence until NORMAL is shown.

| DTC | Tire location |
|---|---|
| 51 | Right-front |
| 53 | Left-front |
| 55 | Right-rear |
| 57 | Left-rear |

*Is NORMAL indicated within one full turn of the tire?*

**YES**—The system is OK at this time. Clear the DTC with the HDS. ■

**NO**—Go to step 12.

7. Turn the ignition switch OFF.

8. Install a wheel with a known-good tire pressure sensor on the vehicle.

9. To memorize the sensor ID, drive the vehicle above 15 mph (24 km/h) for 40 continuous seconds, or memorize the ID with the HDS (see page 18-56).

10. Turn the ignition switch OFF.

11. Turn the ignition switch ON (II).



BACK

Protected by AR



12. With the HDS, check the indicated tire for a normal pressure sensor signal.

    NOTE: If not defined is shown on the HDS, turn the ignition switch OFF, rotate the tire 1/4 turn, then turn the ignition switch ON (II), and try again. If not defined is still shown, repeat the procedure in the previous sentence until NORMAL is shown.

| DTC | Tire location |
|---|---|
| 51 | Right-front |
| 53 | Left-front |
| 55 | Right-rear |
| 57 | Left-rear |

*Is NORMAL indicated within one full turn of the tire?*

**YES**—Replace the tire pressure sensor on the customer's wheel (see page 18-92).■

**NO**—Go to step 13.

13. Turn the ignition switch OFF.

14. Disconnect the appropriate initiator 3P connector.

| DTC | Initiator location |
|---|---|
| 51 | Right-front |
| 53 | Left-front |
| 55 | Right-rear |
| 57 | Left-rear |

15. Disconnect the TPMS control unit 20P connector.

16. Check for continuity between TPMS control unit 20P connector terminal No. 20 and appropriate initiator 3P connector terminal No. 1.

| DTC | Initiator location |
|---|---|
| 51 | Right-front |
| 53 | Left-front |
| 55 | Right-rear |
| 57 | Left-rear |

**TPMS CONTROL UNIT 20P CONNECTOR**
Wire side of female terminals

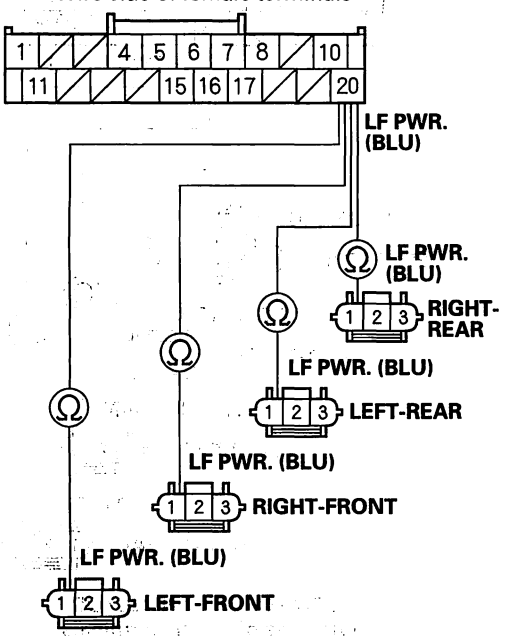


**INITIATOR 3P CONNECTOR**
Wire side of female terminals

*Is there continuity?*

**YES**—Go to step 17.

**NO**—Repair open in the wire between the TPMS control unit and the appropriate initiator.■

(cont'd)

Protected by AR



## DTC Troubleshooting (cont'd)

17. Check for continuity between TPMS control unit 20P connector terminal No. 15 and appropriate initiator 3P connector terminal No. 3.

| DTC | Initiator location |
|---|---|
| 51 | Right-front |
| 53 | Left-front |
| 55 | Right-rear |
| 57 | Left-rear |

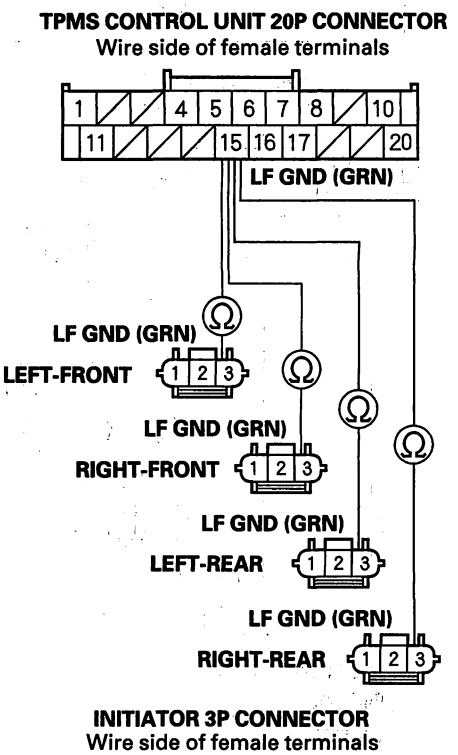


*Is there continuity?*

**YES**—Go to step 18.

**NO**—Repair open in the wire between the TPMS control unit and the appropriate initiator.■

18. Check for continuity between TPMS control unit 20P connector appropriate terminal and appropriate initiator 3P connector terminal No. 2 (see table).

| DTC | TPMS control unit terminal | Initiator location |
|---|---|---|
| 51 | No. 6 | Right-front |
| 53 | No. 5 | Left-front |
| 55 | No. 17 | Right-rear |
| 57 | No. 16 | Left-rear |

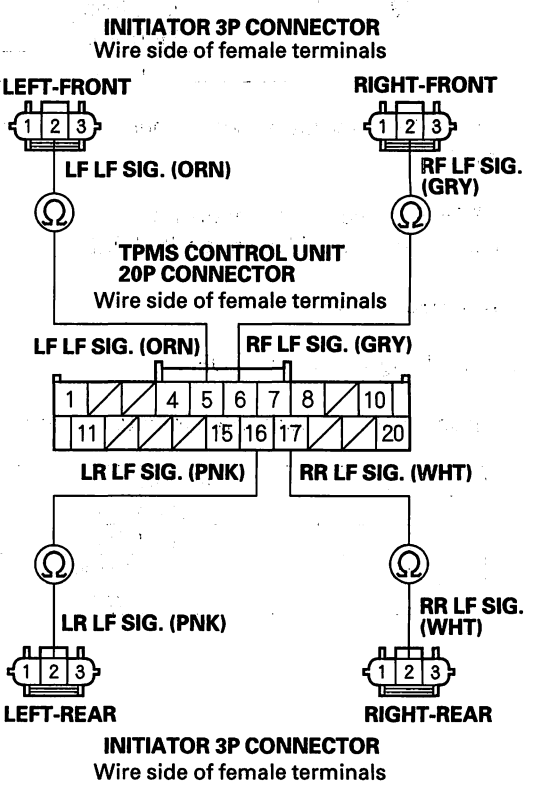


*Is there continuity?*

**YES**—Go to step 19.

**NO**—Repair open in the wire between the TPMS control unit and the appropriate initiator.■



BACK

Protected by AR



19. Check for continuity between body ground and the TPMS control unit 20P connector appropriate terminal (see table).

| DTC | TPMS control unit terminal |
|---|---|
| 51 | No. 6 |
| 53 | No. 5 |
| 55 | No. 17 |
| 57 | No. 16 |

**TPMS CONTROL UNIT 20P CONNECTOR**

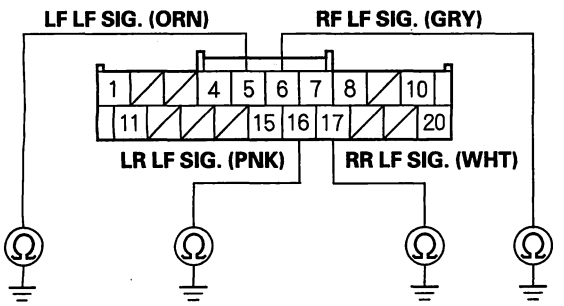


Wire side of female terminals

*Is there continuity?*

**YES**—Repair short to body ground in the wire between the TPMS control unit and the appropriate initiator.■

**NO**—Go to step 20.

20. Measure the voltage between body ground and the TPMS control unit 20P connector appropriate terminal (see table).

| DTC | TPMS control unit terminal |
|---|---|
| 51 | No. 6 |
| 53 | No. 5 |
| 55 | No. 17 |
| 57 | No. 16 |

**TPMS CONTROL UNIT 20P CONNECTOR**

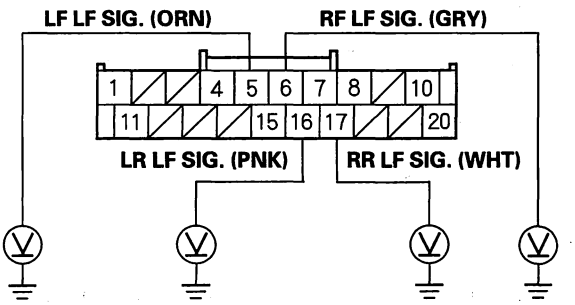


Wire side of female terminals

*Is there battery voltage?*

**YES**—Repair short to power in the wire between the TPMS control unit and the appropriate initiator.■

**NO**—Repair the appropriate initiator (see page 18-91).■

Protected by AR



## DTC Troubleshooting (cont'd)

### DTC 61, 63, 65, 67: Initiator Circuit Open Detection

1. Turn the ignition switch ON (II).
2. Clear the DTC with the HDS.
3. Turn the ignition switch OFF, then turn the ignition switch ON (II) again.
4. Check for DTCs with the HDS, and note the indicated DTC(s).

   *Is DTC 61, 63, 65, and/or 67 indicated?*

   **YES**—Go to step 5.

   **NO**—The system is OK at this time.■

5. Turn the ignition switch OFF.
6. Disconnect the appropriate initiator 3P connector.

| DTC | Initiator location |
|---|---|
| 61 | Right-front |
| 63 | Left-front |
| 65 | Right-rear |
| 67 | Left-rear |

7. Disconnect the TPMS control unit 20P connector.
8. Check for continuity between TPMS control unit 20P connector terminal No. 20 and appropriate initiator 3P connector terminal No. 1.

| DTC | Initiator location |
|---|---|
| 61 | Right-front |
| 63 | Left-front |
| 65 | Right-rear |
| 67 | Left-rear |

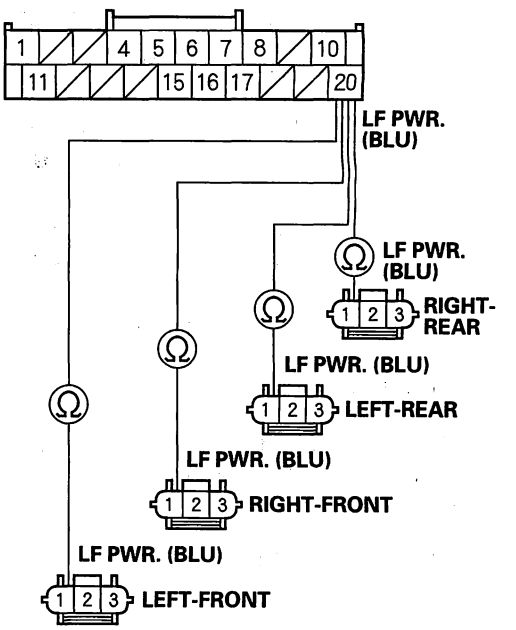


*Is there continuity?*

**YES**—Go to step 9.

**NO**—Repair open in the wire between the TPMS control unit and the appropriate initiator.■



BACK

Protected by AR



9. Check for continuity between TPMS control unit 20P connector terminal No. 15 and appropriate initiator 3P connector terminal No. 3.

| DTC | Initiator location |
|---|---|
| 61 | Right-front |
| 63 | Left-front |
| 65 | Right-rear |
| 67 | Left-rear |

**TPMS CONTROL UNIT 20P CONNECTOR**
Wire side of female terminals

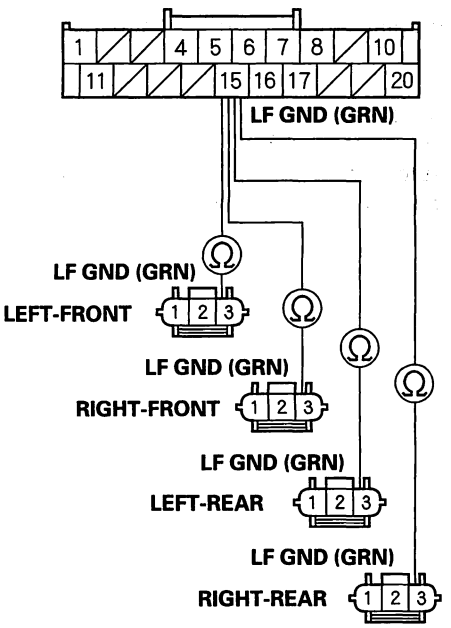


**INITIATOR 3P CONNECTOR**
Wire side of female terminals

*Is there continuity?*

**YES**—Go to step 10.

**NO**—Repair open in the wire between the TPMS control unit and the appropriate initiator.■

10. Check for continuity between TPMS control unit 20P connector appropriate terminal and appropriate initiator 3P connector terminal No. 2 (see table).

| DTC | TPMS control unit terminal | Initiator location |
|---|---|---|
| 61 | No. 6 | Right-front |
| 63 | No. 5 | Left-front |
| 65 | No. 17 | Right-rear |
| 67 | No. 16 | Left-rear |

**INITIATOR 3P CONNECTOR**
Wire side of female terminals

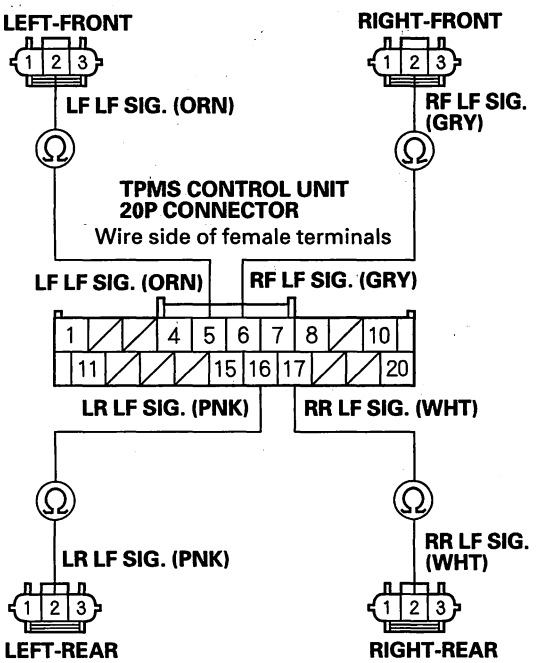


**INITIATOR 3P CONNECTOR**
Wire side of female terminals

*Is there continuity?*

**YES**—Go to step 11.

**NO**—Repair open in the wire between the TPMS control unit and the appropriate initiator.■

(cont'd)

Protected by AR



## DTC Troubleshooting (cont'd)

11. Check for noted DTC(s) in step 4.

    *Were DTC 61, 63, 65, and 67 indicated at the same time?*

    **YES**—Check for loose terminals and poor connections at the TPMS control unit. If necessary, substitute a known-good TPMS control unit (see page 18-90), and recheck.■

    **NO**—Go to step 12.

12. Replace the initiator indicated by the DTC with another initiator with no DTC (it may be a known-good initiator) (see page 18-91).

| DTC | Initiator location |
|---|---|
| 61 | Right-front |
| 63 | Left-front |
| 65 | Right-rear |
| 67 | Left-rear |

13. Reconnect all connectors.

14. Turn the ignition switch ON (II).

15. Clear the DTC with the HDS.

16. Turn the ignition switch OFF, then turn the ignition switch ON (II) again.

17. Check for DTCs with the HDS, and compare the indicated DTC with the noted DTC(s) in step 4.

| DTC | Initiator location |
|---|---|
| 61 | Right-front |
| 63 | Left-front |
| 65 | Right-rear |
| 67 | Left-rear |

    *Does the indicated DTC change between the initiators that were replaced in step 12?*

    **YES**—Replace the appropriate initiator (see page 18-91).■

    **NO**—Check for loose terminals and poor connections at the TPMS control unit. If necessary, substitute a known-good TPMS control unit (see page 18-90), and recheck.■



BACK

Protected by AR



## DTC 81: TPMS Control Unit Failure (RAM/ROM/ADC/EEPROM/ALU) Check

NOTE: Low battery voltage can cause this DTC. Make sure the battery is fully charged and in good condition.

1. Turn the ignition switch ON (II).
2. Clear the DTC with the HDS.
3. Turn the ignition switch OFF, then turn it ON (II) again.
4. Check for DTCs with the HDS.

   *Is DTC 81 indicated?*

   **YES**—Replace the TPMS control unit (see page 18-90).■

   **NO**—The system is OK at this time.■

## DTC 83: No VSP Signal

1. Turn the ignition switch ON (II).
2. Clear the DTC with the HDS.
3. Turn the ignition switch OFF, then turn it ON (II).
4. Check for DTCs with the HDS.

   *Is DTC 83 indicated?*

   **YES**—Go to step 5.

   **NO**—The system is OK at this time.■

5. Check for DTCs with the HDS.

   *Is DTC 85 indicated?*

   **YES**—Go to DTC 85 troubleshooting (see page 18-84).■

   **NO**—Go to step 6.

6. Test-drive the vehicle.
7. Check the VSP in the TPMS DATA LIST with the HDS.

   *Is the vehicle speed indicated?*

   **YES**—Check for loose terminals and poor connections at the TPMS control unit. If necessary, substitute a known-good TPMS control unit (see page 18-90), and recheck.■

   **NO**—Go to step 8.

8. Check the speedometer.

   *Does the speedometer register speed?*

   **YES**—Replace the TPMS control unit (see page 18-90).■

   **NO**—Substitute a known-good PCM (see page 11-252), and retest. If no codes are shown, replace the original PCM.■

Protected by AR



## DTC Troubleshooting (cont'd)

### DTC 85: CAN Data Error

1. Turn the ignition switch ON (II).
2. Clear the DTC with the HDS.
3. Turn the ignition switch OFF, then turn the ignition switch ON (II) again.
4. Wait about 5 seconds.
5. Check for DTCs with the HDS.

   *Is DTC 85 indicated?*

   **YES**—Go to step 6.

   **NO**—The system is OK at this time.■

6. Test-drive the vehicle.

   *Does the speedometer work?*

   **YES**—Go to step 10.

   **NO**—Go to step 7.

7. Turn the ignition switch OFF.
8. Disconnect the TPMS control unit 20P connector.
9. Test-drive the vehicle.

   *Does the speedometer work?*

   **YES**—Check for loose terminals and poor connections at the TPMS control unit. If necessary, substitute a known-good TPMS control unit (see page 18-90), and recheck.■

   **NO**—Turn the ignition switch OFF, and reconnect all connectors, then check and troubleshoot the fuel and emissions systems (see page 11-3).■

10. Turn the ignition switch OFF.
11. Short the SCS line with the HDS.
12. Disconnect PCM connector A (44P).
13. Disconnect the TPMS control unit 20P connector.
14. Check for continuity between TPMS control unit 20P connector terminals and PCM connector A (44P) terminals individually. (see table).

| Terminal name | TPMS control unit terminal | PCM A terminal |
|---|---|---|
| CAN L | No. 11 | No. 37 |
| CAN H | No. 1 | No. 36 |

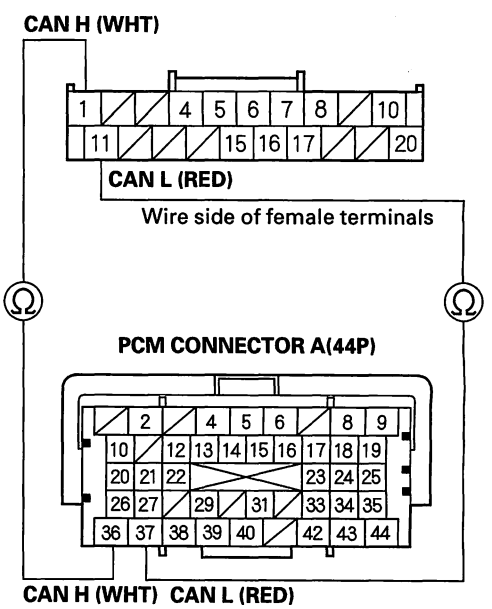


*Is there continuity?*

**YES**—Check for loose terminals and poor connections at the TPMS control unit. If necessary, substitute a known-good TPMS control unit (see page 18-90), and recheck.■

**NO**—Repair open in the wire between the TPMS control unit and the PCM.■



BACK

Protected by AR



## DTC 91, 93, 95, 97: Tire Pressure Sensor Internal Error

1. Turn the ignition switch ON (II).
2. Clear the DTC with the HDS.
3. Turn the ignition switch OFF, then turn it ON (II) again.
4. Wait about 1 minute.
5. Check for DTCs with the HDS.

NOTE: The tire pressure sensor of the appropriate wheel is shown.

| DTC | Tire location |
|---|---|
| 91 | Right-front |
| 93 | Left-front |
| 95 | Right-rear |
| 97 | Left-rear |

*Is DTC 91, 93, 95 or 97 indicated?*

**YES**—Replace the appropriate tire pressure sensor (see page 18-92).■

**NO**—The system is OK at this time.■

Protected by AR



## Symptom Troubleshooting

### Low pressure indicator does not come on, and no DTCs are stored

1. Turn the ignition switch ON (II).

2. Check the low pressure indicator for several seconds when the ignition switch is turned ON (II).

   *Did the indicator come on and then go off?*

   **YES**—Go to step 3.

   **NO**—Go to step 7.

3. Turn the ignition switch OFF.

4. Check the pressure in all four tires.

   *Is the tire pressure 175 kPa (1.8 kgf/cm², 25 psi) or less?*

   **YES**—Go to step 5.

   **NO**—The system is OK at this time.■

5. Turn the ignition switch ON (II).

6. Check the TIRE PRESSURE in the TPMS DATA LIST with the HDS, and compare with measured actual tire pressure.

   NOTE: If not defined is shown on the HDS, turn the ignition switch OFF, rotate the appropriate tire 1/4 turn, then turn the ignition switch ON (II), and try again. If not defined is still shown, repeat the procedure in the previous sentence until NORMAL is shown.

   *Is the indicated tire pressure on the HDS within 40 kPa (0.4 kgf/cm², 6 psi) of the actual tire pressure?*

   **YES**—Go to step 7.

   **NO**—Replace the tire pressure sensor (see page 18-92).■

7. Wait about 5 seconds with the ignition switch turned ON (II).

8. Check for gauges DTC with the HDS (see page 22-6).

   *Is any gauge DTC indicated?*

   **YES**—Troubleshoot the indicated gauge DTC.■

   **NO**—Go to step 9.

9. Turn the ignition switch OFF.

10. Disconnect the TPMS control unit 20P connector.

11. Measure the voltage between TPMS control unit 20 P connector terminals No. 4 and No. 8.

**TPMS CONTROL UNIT 20P CONNECTOR**

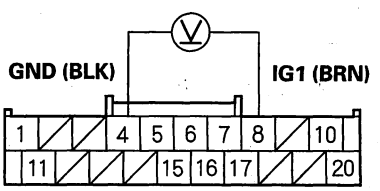


Wire side of female terminals

*Is there battery voltage?*

**YES**—Repair short to power in the wire between the TPMS control unit and the No. 10 (7.5 A) fuse in the under-dash fuse/relay box.■

**NO**—Check for loose terminals and poor connections at the TPMS control unit. If necessary, substitute a known-good TPMS control unit (see page 18-90), and recheck.■



BACK

Protected by AR



### Low pressure indicator does not go off, and no DTCs are stored

1. Turn the ignition switch OFF.
2. Disconnect the TPMS control unit 20P connector.
3. Turn the ignition switch ON (II).
4. Check the low pressure indicator for several seconds when the ignition switch is turned ON (II).

   *Did the indicator come on and then go off?*

   **YES**—Check for loose terminals and poor connections at the TPMS control unit. If necessary, substitute a known-good TPMS control unit (see page 18-90), and recheck.■

   **NO**—Do the troubleshooting for the gauge control module (see page 22-258). If necessary, substitute a known-good gauge control module (see page 22-284), and recheck.■

### TPMS indicator does not come on, and no DTCs are stored

1. Turn the ignition switch OFF.
2. Disconnect the TPMS control unit 20P connector.
3. Turn the ignition switch ON (II).
4. Check the TPMS indicator for several seconds when the ignition switch is turned ON (II).

   *Did the indicator come on and then go off?*

   **YES**—Check for loose terminals and poor connections at the TPMS control unit. If necessary, substitute a known-good TPMS control unit (see page 18-90), and recheck.■

   **NO**—Do the troubleshooting for the gauge control module (see page 22-258). If necessary, substitute a known-good gauge control module (see page 22-284), and recheck.■

Protected by AR



## Symptom Troubleshooting (cont'd)

### TPMS indicator does not go off, and no DTCs are stored

NOTE: Check for gauges DTCs with the HDS (see page 22-6). If gauges DTCs are stored, troubleshoot those DTCs first.

1. Turn the ignition switch ON (II).
2. Check the TPMS indicator for several seconds when the ignition switch is turned ON (II).

   *Did the indicator come on and then go off?*

   **YES**—The system is OK at this time.■

   **NO**—Go to step 3.
3. Turn the ignition switch OFF.
4. Check the No. 20 (7.5 A) fuse in the under-dash fuse/relay box.

   *Is the fuse blown?*

   **YES**—Replace the No. 20 (7.5 A) fuse, and recheck.■

   **NO**—Reinstall the fuse, then go to step 5.
5. Check the No. 10 (7.5 A) fuse in the under-dash fuse/relay box.

   *Is the fuse blown?*

   **YES**—Replace the No. 10 (7.5 A) fuse, and recheck.■

   **NO**—Reinstall the fuse, then go to step 6.
6. Disconnect the TPMS control unit 20P connector.
7. Measure the voltage between body ground and TPMS control unit 20P connector terminal No. 10.

**TPMS CONTROL UNIT 20P CONNECTOR**

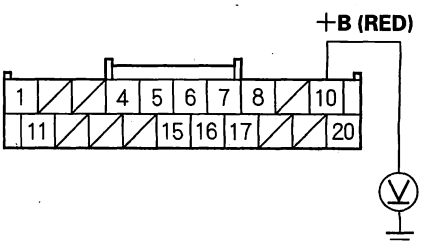


Wire side of female terminals

*Is there battery voltage?*

**YES**—Go to step 8.

**NO**—Repair open in the wire between the TPMS control unit and the No. 20 (7.5 A) fuse in the under-dash fuse/relay box.■

8. Turn the ignition switch ON (II).
9. Measure the voltage between body ground and TPMS control unit 20P connector terminal No. 8.

**TPMS CONTROL UNIT 20P CONNECTOR**

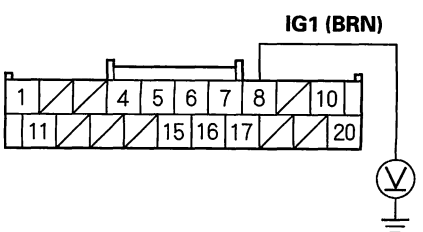


Wire side of female terminals

*Is there battery voltage?*

**YES**—Go to step 10.

**NO**—Repair open in the wire between the TPMS control unit and the No. 10 (7.5 A) fuse in the under-dash fuse/relay box.■



BACK

Protected by AR



10. Turn the ignition switch OFF.

11. Reconnect the TPMS control unit 20P connector.

12. Turn the ignition switch ON (II).

13. Measure the voltage between body ground and TPMS control unit 20P connector terminal No. 4.

**TPMS CONTROL UNIT 20P CONNECTOR**

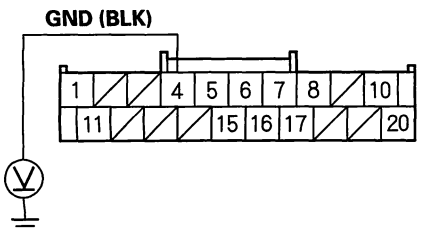


Wire side of female terminals

*Is there 0.1 V or more?*

**YES**—Repair open or high resistance in the wire between the TPMS control unit and body ground (G503). ■

**NO**—Do the troubleshooting for the gauge control module (see page 22-258). If the gauge control module is OK, check for loose terminals and poor connections at the TPMS control unit. If necessary, substitute a known-good TPMS control (see page 18-90), and recheck. ■

Protected by AR



## TPMS Control Unit Replacement

NOTE: Make sure the TPMS control unit mounting bracket is not bent or twisted as this may affect its communication with the initiators and the tire pressure sensors.

1. Remove the driver's dashboard undercover (see page 20-102).

2. Disconnect the TPMS control unit connector (A).

   NOTE: The TPMS control unit is located under the steering column.

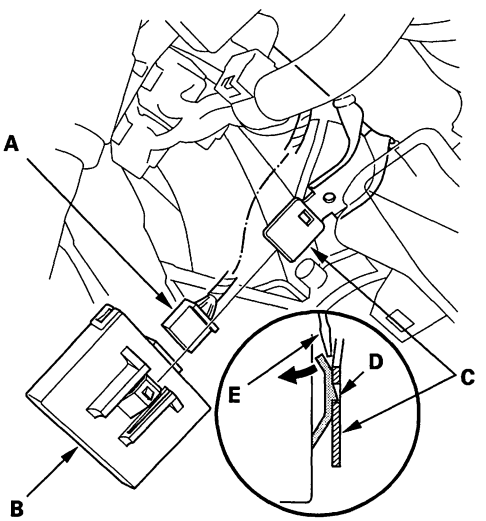


3. Remove the TPMS control unit (B) from the bracket (C).

   NOTE: While separating the TPMS control unit from the bracket, release the hook (D) on the TPMS control unit using a flat-tipped screwdriver (E), and push up to release it from the bracket.

4. Install the TPMS control unit in the reverse order of removal.

   NOTE: Make sure the TPMS control unit is properly installed. You will hear a click when the TPMS control unit is securely mounted on the bracket.

5. Connect the HDS and memorize the pressure sensor IDs (see page 18-56). Do not memorize the IDs automatically.



BACK

Protected by AR



# Initiator Replacement

## Front

*NOTE: Make sure* the initiator mounting bracket is not bent or twisted as this may affect its communication with the TPMS control unit and the tire pressure sensor.

1. Raise the front of the vehicle, and support it with safety stands in the proper locations (see page 1-7).
2. Remove the front wheel.
3. Remove the front inner fender (see page 20-176).
4. Disconnect the initiator connector (A).

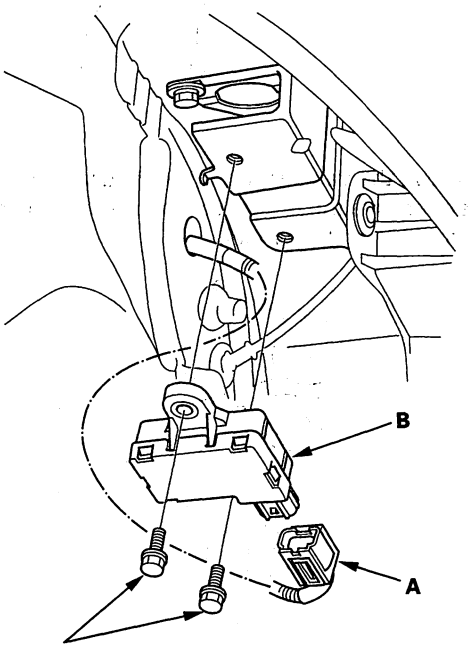


**6 x 1.0 mm**
**9.8 N·m (1.0 kgf·m, 7.2 lbf·ft)**

5. Remove the initiator (B) from the inner side of the wheel well.
6. Install the initiator in the reverse order of removal.

## Rear

1. Raise the rear of the vehicle, and support it with safety stands in the proper locations (see page 1-7).
2. Remove the rear wheel.
3. Remove the cover (A) with the initiator (B), and disconnect the initiator connector (C).

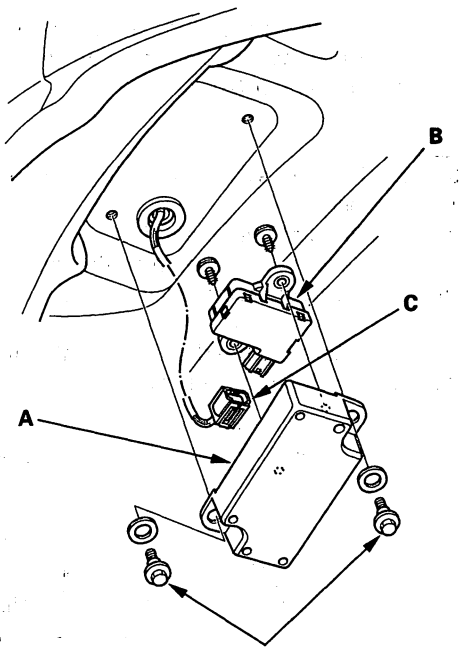


**6 x 1.0 mm**
**9.8 N·m (1.0 kgf·m, 7.2 lbf·ft)**

4. Separate the cover and the initiator.
5. Install the initiator in the reverse order of removal.

Protected by AR



## Tire Pressure Sensor Replacement

### Removal

1. Raise the vehicle, and support it with safety stands in the proper locations (see page 1-7).

2. Remove the wheel with the faulty sensor.

3. Remove the tire valve cap and the valve core, and let the tire deflate.

4. Remove any balance weights, and then break the bead loose from the wheel with a commercially available tire changer (A).

**NOTICE**

Note these items to avoid damaging the tire pressure sensor:
- Do the outside of the wheel first.
- Position the wheel as shown so the valve stem (B) is 90 degrees from the bead breaker (C) as shown.
- Do not position the bead breaker of the tire changer too close to the rim.

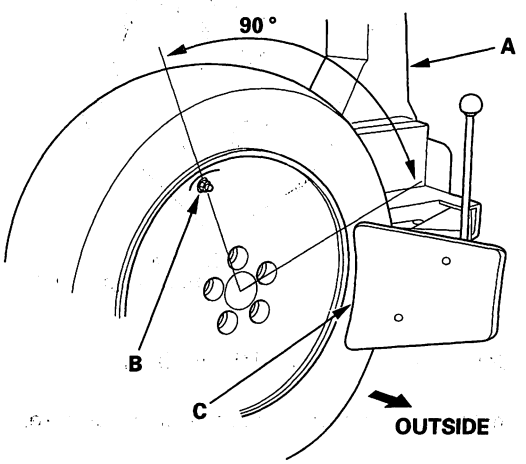


5. Position the wheel so the tire machine (A) and tire iron (B) are next to the valve stem (C) and will move away from it when the machine starts. Then remove the tire from the wheel.

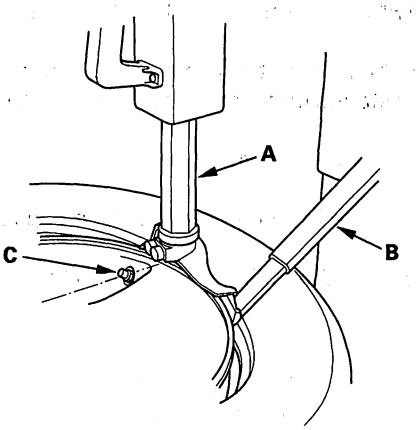


6. Remove the valve stem nut (A) and washer (B), then remove the tire pressure sensor with valve stem (C) from the wheel.

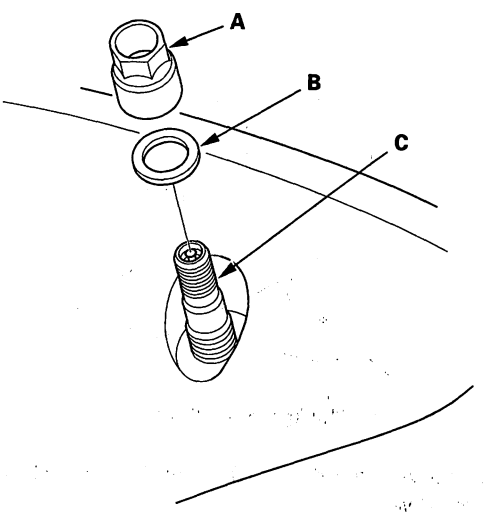




BACK

Protected by AR



7. Remove and discard the valve stem grommet (A), from the tire pressure sensor (B).

   NOTE:
   - The valve stem grommet might stay in the wheel; make sure you remove it.
   - Always use a new valve stem grommet whenever the tire pressure sensor has been removed from the wheel. When only removing a tire from the wheel, replace the valve stem grommet if it is possible.

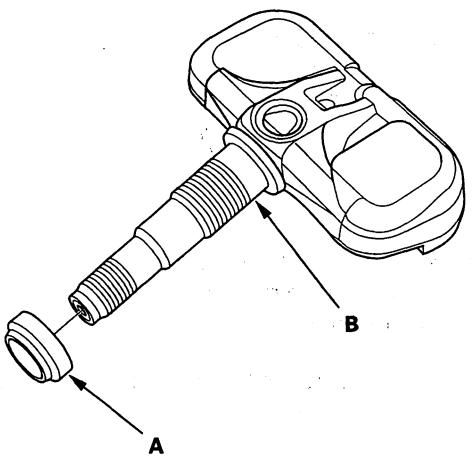


## Installation

NOTE:
- Use only wheels that have a "STK" stamp (A) on them.
- This vehicle may be equipped with either type 1 or type 2 wheels.

**TYPE 1**

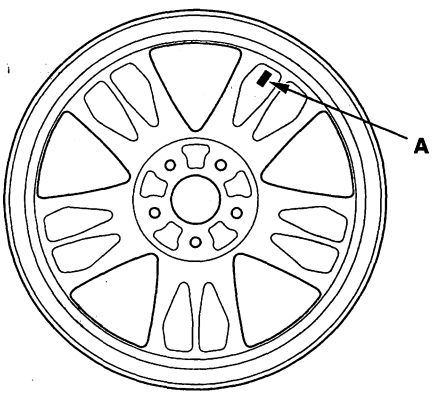


**TYPE 2**

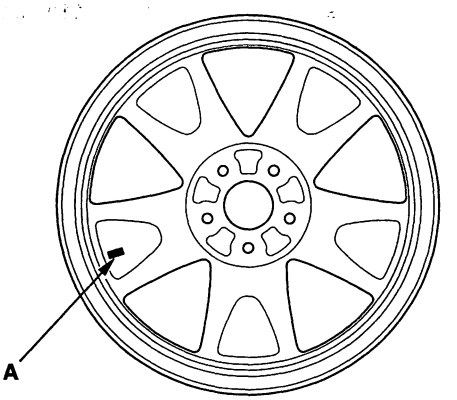


(cont'd)

Protected by AR



## Tire Pressure Sensor Replacement (cont'd)

1. Before installing the tire pressure sensor, clean the mating surfaces on the sensor and the wheel.

2. Install the tire pressure sensor (A) and the washer (B) to the wheel (C), and tighten the valve stem nut (D) finger tight. Make sure the pressure sensor is resting on the wheel.

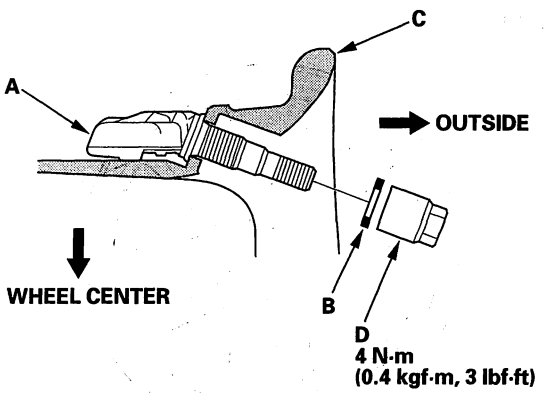


3. Tighten the valve stem nut to the specified torque while holding the tire pressure sensor.

   NOTE: Do not use air or electric impact tools to tighten a valve stem nut.

4. Lube the tire bead, and position the wheel so the tire machine (A) and tire iron (B) are next to the valve stem (C) and will move away from it when the machine starts. Then install the tire onto the wheel.

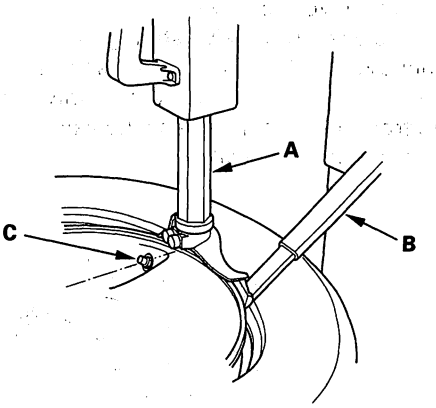


5. Inflate the tire to 300 kPa (3.1 kgf/cm$^2$, 44 psi) to seat the tire bead to the rim, then adjust the tire pressure to 220 kPa (2.2 kgf/cm$^2$, 32 psi).

   NOTE: Make sure the tire bead is seated on both sides of the rim uniformly.

6. Check the valve stem nut tightening torque, then install the valve stem cap.

7. Check and adjust the wheel balance, then install the wheels on the vehicle. Torque the wheels to specifications.

8. Remove the jack stands, and lower the vehicle.

9. Connect the HDS and memorize the pressure sensor ID(s) (see page 18-56).



BACK

Protected by AR

# Brakes

## Conventional Brake Components


Special Tools ..... 19-2
Component Location Index ..... 19-3
Brake System Inspection and Test ..... 19-4
Symptom Troubleshooting ..... 19-5
Brake Pedal and Brake Pedal Position Switch Adjustment ..... 19-6
Parking Brake Inspection and Adjustment ..... 19-7
Brake System Bleeding ..... 19-9
Brake System Indicator Circuit Diagram ..... 19-10
Parking Brake Switch Test ..... 19-11
Brake Fluid Level Switch Test ..... 19-11
Front Brake Pad Inspection and Replacement ..... 19-12
Front Brake Disc Inspection ..... 19-15
Front Brake Caliper Overhaul ..... 19-16
Master Cylinder Replacement ..... 19-17
Master Cylinder Inspection ..... 19-19
Brake Booster Test ..... 19-20
Brake Booster Pushrod Clearance Adjustment ..... 19-21
Brake Booster Replacement ..... 19-22
Rear Brake Pad Inspection and Replacement ..... 19-24
Rear Brake Disc Inspection ..... 19-27
Rear Brake Caliper Overhaul ..... 19-28
Parking Brake Inspection ..... 19-29
Parking Brake Shoe Replacement ..... 19-31
Parking Brake Shoe Lining Break-in ..... 19-34
Brake Pedal Replacement ..... 19-35
Brake Hose and Line Inspection ..... 19-36
Brake Hose Replacement ..... 19-37
Parking Brake Cable Replacement ..... 19-39

**Electric Vacuum Pump System ..... 19-41**

**VSA (Vehicle Stability Assist) System Components ..... 19-81**

Protected by AR

# Conventional Brake Components

## Special Tools

| Ref. No. | Tool Number | Description | Qty |
|---|---|---|---|
| ① | 07AAE-SEPA101 | Brake Caliper Piston Compressor | 1 |
| ② | 070AB-SJA0100 | Booster Piston Holder | 1 |

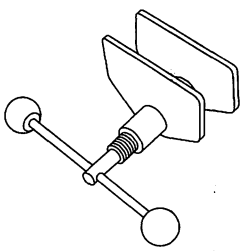

①

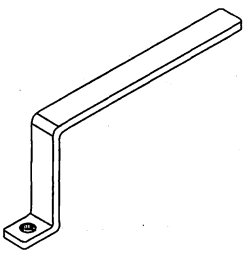

②



BACK

Protected by AR

## Component Location Index

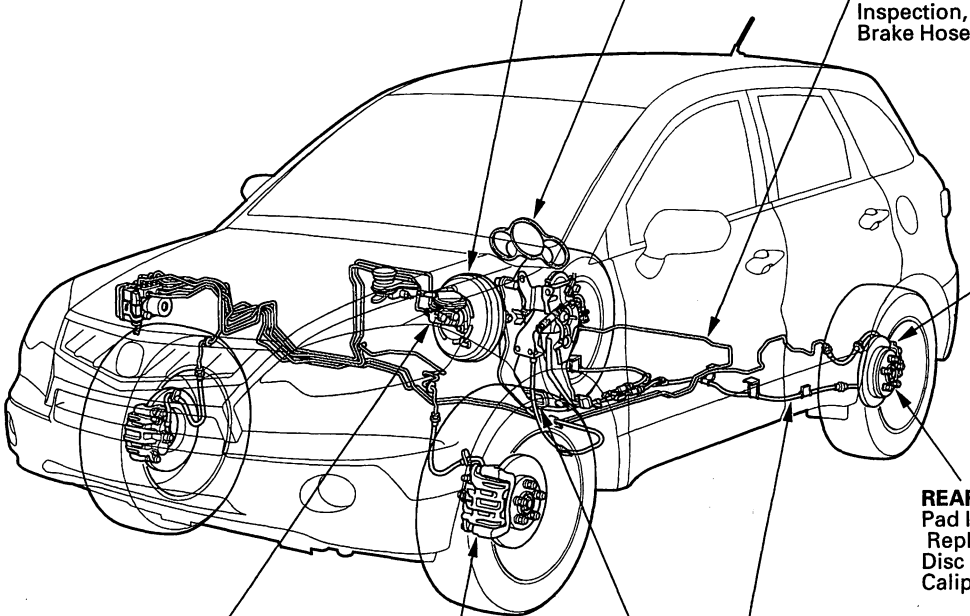

**BRAKE BOOSTER**
Test, page 19-20
Pushrod Clearance Adjustment, page 19-21
Replacement, page 19-22

**BRAKE SYSTEM INDICATOR**
Circuit Diagram, page 19-10
Parking Brake Switch Test, page 19-11
Brake Fluid Level Switch Test, page 19-11

**BRAKE HOSE and LINE**
Inspection, page 19-36
Brake Hose Replacement, page 19-37

**PARKING DRUM BRAKE**
Inspection, page 19-29
Shoe Replacement, page 19-31
Shoe Lining Break-in, page 19-34

**REAR DISC BRAKE**
Pad Inspection and Replacement, page 19-24
Disc Inspection, page 19-27
Caliper Overhaul, page 19-28

**PARKING BRAKE**
Inspection and Adjustment, page 19-7
Cable Replacement, page 19-39

**MASTER CYLINDER**
Brake System Bleeding, page 19-9
Replacement, page 19-17
Inspection, page 19-19

**BRAKE PEDAL**
Brake Pedal and Brake Pedal Position Switch Adjustment, page 19-6
Replacement, page 19-35

**FRONT BRAKE**
Pad Inspection and Replacement, page 19-12
Disc Inspection, page 19-15
Caliper Overhaul, page 19-16

Protected by AR



## Brake System Inspection and Test

Inspect the brake system components listed. Repair or replace any parts that are leaking or damaged.

**Component Inspections:**

| Component | Procedure | Also check for |
|---|---|---|
| Master Cylinder | Look for damage or signs of fluid leakage at:<br>• Reservoir, subreservoir, or master cylinder body.<br>• Lines, reservoir hose and grommets, and their joints.<br>• Between master cylinder and booster. | Bulging seat at reservoir cap. This is a sign of fluid contamination. |
| Brake Hoses | Look for damage or signs of fluid leakage at:<br>• Line joints and banjo bolt connections.<br>• Hoses and lines, also inspect for twisting or damage. | Bulging, twisted, or bent lines. |
| Caliper | Look for damage or signs of fluid leakage at:<br>• Piston seal.<br>• Banjo bolt connections.<br>• Bleed screw. | Seized or sticking caliper pins. |
| VSA Modulator-control Unit | Look for damage or signs of fluid leakage at:<br>• Line joints.<br>• Modulator-control unit. | |

### Brake System Test

**Brake pedal sinks/fades when braking**

1. Set the parking brake, and start the engine, then turn off the A/C switch. Allow the engine to warm up to normal operating temperature (radiator fan comes on twice).

2. Attach a 50 mm (2 in.) piece of masking tape along the bottom of the steering wheel, and draw a horizontal reference mark across it.

3. With the transmission in P or N position, press and hold the brake pedal lightly (about the same pressure needed to keep an A/T-equipped vehicle from creeping), then release the parking brake.

4. While still holding the brake pedal, hook the end of the tape measure behind the brake pedal, then pull the tape up to the steering wheel. Note the measurement between the brake pedal and the reference mark on the steering wheel.

5. Apply steady pressure to the brake pedal for 3 minutes.

6. Watch the tape measure.

   • If the measurement increases 10 mm (3/8 in.) or less, the master cylinder is OK.
   • If the measurement increases more than 10 mm (3/8 in.), replace the master cylinder.

   NOTE: When the electric vacuum pump motor operates, the brake pedal pressing force will be changed. In this case, the master cylinder is not faulty.



BACK

Protected by AR

## Symptom Troubleshooting

### Rapid brake pad wear, vehicle vibration (after a long drive), or high, hard brake pedal

NOTE: Make sure that the caliper pins are installed correctly.
The upper caliper pin B and lower caliper pin A are different. If the pins are installed in the wrong location, it will cause, vibration, uneven or rapid brake pad wear, and possibly uneven tire wear. For proper caliper pin location (see page 19-16).

1. Check the electric vacuum pump system (see page 19-43). Make sure the indicator is not turned on.

2. Drive the vehicle until the brakes drag or until the pedal is high and hard. This can take 20 or more brake pedal applications during an extended test-drive.

3. With the engine running, raise the vehicle on a lift, and spin all four wheels by hand.

   *Is there brake drag at any of the wheels?*

   **YES**—Go to step 4.

   **NO**—Look for other causes of the pad wear, high pedal, or vehicle vibration. ■

4. Turn the engine off, pump the brake pedal to deplete the vacuum in the brake booster, and then spin the wheels again to check for brake drag.

   *Is there brake drag at any of the wheels?*

   **YES**—Go to step 5.

   **NO**—Replace the brake booster (see page 19-22). ■

5. Without removing the brake lines, unbolt and separate the master cylinder from the booster, then spin the wheels to check for brake drag.

   *Is there brake drag at any of the wheels?*

   **YES**—Go to step 6.

   **NO**—Check the brake pedal position switch adjustment and pedal free play (see page 19-6). ■

6. Loosen the hydraulic lines at the master cylinder, then spin the wheels to check for brake drag.

   *Is there brake drag at any of the wheels?*

   **YES**—Go to step 7.

   **NO**—Replace the master cylinder (see page 19-17). ■

7. Loosen the bleed screws at each caliper, then spin the wheels to check for brake drag.

   *Is there brake drag at any of the wheels?*

   **YES**—Disassemble and repair the caliper on the wheel(s) with brake drag. ■

   **NO**—Look for and replace any damaged brake lines. If all brake lines are OK, replace the VSA modulator-control unit (see page 19-137). ■

Protected by AR



## Brake Pedal and Brake Pedal Position Switch Adjustment

### Pedal Height

1. Turn the brake pedal position switch (A) counterclockwise, and pull it back until it is no longer touching the brake pedal.

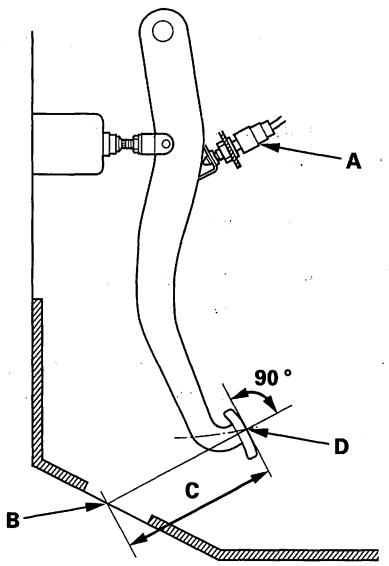


2. Pull back the carpet and find the cutout (B) in the insulator. Lift up the insulator cutout and measure the pedal height (C) at the center of the pedal pad (D) to the floor without the insulator.

   **Standard pedal height (with carpet removed): 165 mm (6 1/2 in.)**

3. Loosen the pushrod locknut (A), and screw the pushrod (B) in or out with pliers until the standard pedal height from the floor is reached. After adjustment, tighten the locknut firmly. Do not adjust the pedal height with the pushrod pressed.

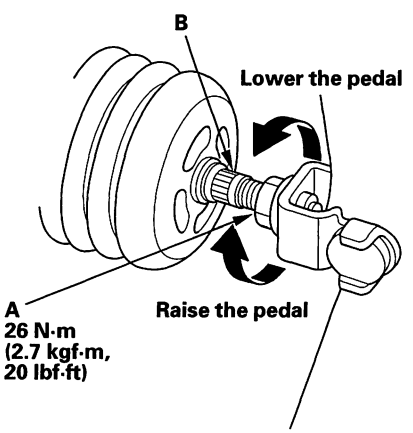


### Brake Pedal Position Switch Clearance

4. Using one hand, lift up on the brake pedal, while doing step 4. Push in the brake pedal position switch until its plunger is fully pressed (threaded end (A) touching the pad (B) on the pedal arm). Then, turn the switch 45 ° clockwise to lock it. The gap between the brake pedal position switch and the pad is automatically adjusted to 0.7 mm (0.028 in.) by locking the switch. Make sure the brake lights go off when the pedal is released.

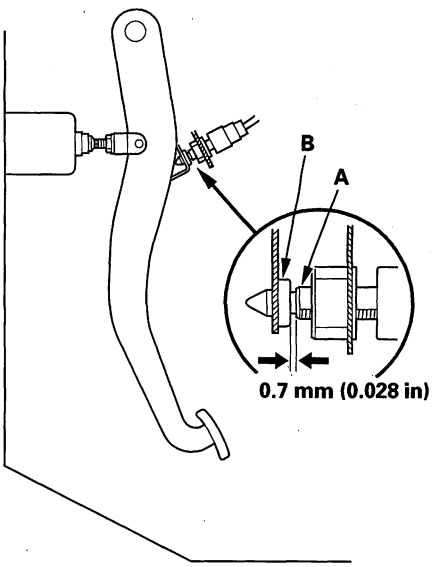


5. Check the brake pedal free play.



BACK

Protected by AR

## Pedal Free Play

1. With the engine off, inspect the pedal free play (A) on the pedal pad (B) by pushing the pedal by hand. If the brake pedal free play is out of specification, adjust the brake pedal position switch (C). If the brake pedal free play is insufficient, it may result in brake drag.

   **Free play: 1—5 mm (1/16—3/16 in.)**

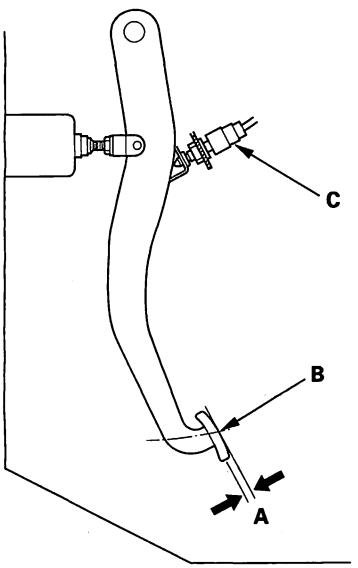


## Parking Brake Inspection and Adjustment

### Inspection

1. Press the parking brake pedal (A) with 294 N (30 kgf, 66 lbf) of force to fully apply the parking brake. The parking brake pedal should be locked within the specified number of clicks.

   **Pedal locked clicks: 6 to 7**

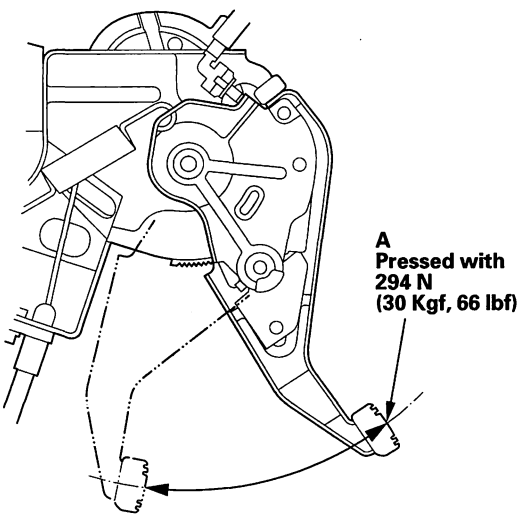


2. Adjust the parking brake if the pedal clicks are not within the specification.

   NOTE: Minor parking brake pedal adjustments (1 to 2 clicks) can be made with the adjusting nut. If a larger adjustment is required, follow the major adjustment procedure using the adjuster at the parking brake drum.
   After installing new parking brake shoes and/or new brake disc/drum, make sure you drive the vehicle for "break-in" (see page 19-34).

(cont'd)

Protected by AR



## Parking Brake Inspection and Adjustment (cont'd)

### Minor Adjustment

1. Raise the rear of the vehicle, and support it with safety stands in the proper locations (see page 1-7).
2. Release the parking brake pedal fully.
3. Press the parking brake pedal 1 click.
4. Tighten the parking brake adjusting nut (A) until the parking brakes drag slightly when the rear wheels are turned.

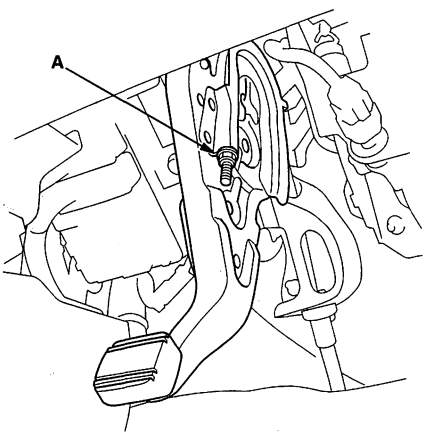


5. Release the parking brake pedal fully, and check that the parking brakes do not drag when the rear wheels are turned. Readjust if necessary.
6. Make sure the parking brakes are fully applied when the parking brake pedal is pressed all the way.

### Major Adjustment (to be done when replacing parking brake shoes)

1. Raise the rear of the vehicle, and support it with safety stands in the proper locations (see page 1-7).
2. Release the parking brake pedal fully.
3. Back off the parking brake adjusting nut (A) in the parking brake pedal.

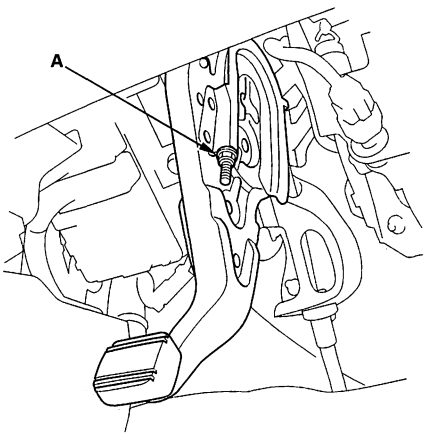


4. Remove the rear wheels.
5. Remove the access plug (A).

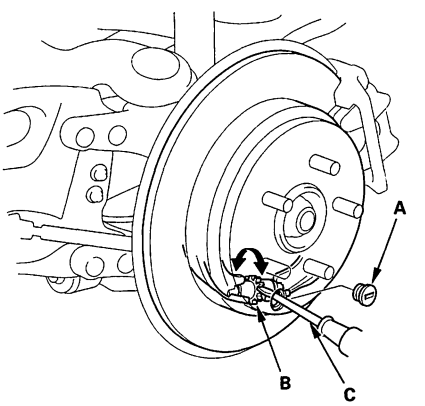


6. Turn the ratchet teeth on the adjuster nut (B) with a flat-tip screwdriver (C) until the shoes lock against the parking brake drum. Then back off the adjuster 8 clicks, and install the access plug.
7. Install the rear wheels.
8. Do the minor adjustment procedure.



BACK

Protected by AR

## Brake System Bleeding

NOTE:
- Do not reuse the drained fluid. Use only clean Acura DOT 3 Brake Fluid from an unopened container. Using a non-Acura brake fluid can cause corrosion and shorten the life of the system.
- Do not mix different brands of brake fluid; they may not be compatible.
- Make sure no dirt or other foreign matter is allowed to contaminate the brake fluid.
- Do not spill brake fluid on the vehicle, it may damage the paint; if brake fluid does contact the paint, wash it off immediately with water.
- The reservoir connected to the master cylinder must be at the MAX (upper) level mark at the start of the bleeding procedure and checked after bleeding each brake line. Add fluid as required.

1. Make sure the brake fluid level in the reservoir (A) is at the MAX (upper) level line (B).

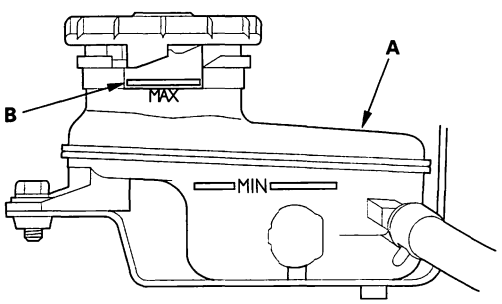


2. Have someone slowly pump the brake pedal several times, then apply steady pressure.

3. Start the bleeding at the driver's side of the front brake system.

   NOTE: Bleed the calipers or the wheel cylinders in the sequence shown.

**BLEEDING SEQUENCE:**

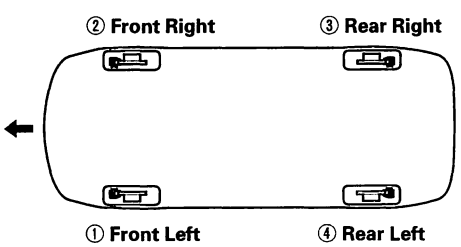


4. Attach a length of clear drain tube (A) to the bleed screw (B), then, loosen the bleed screw to allow air to escape from the system. Then tighten the bleed screw securely.

   NOTE: Do not loosen the special bolt (C) on the rear caliper.

**Front**

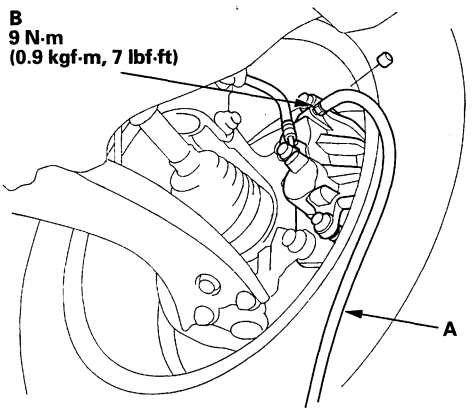


**Rear**

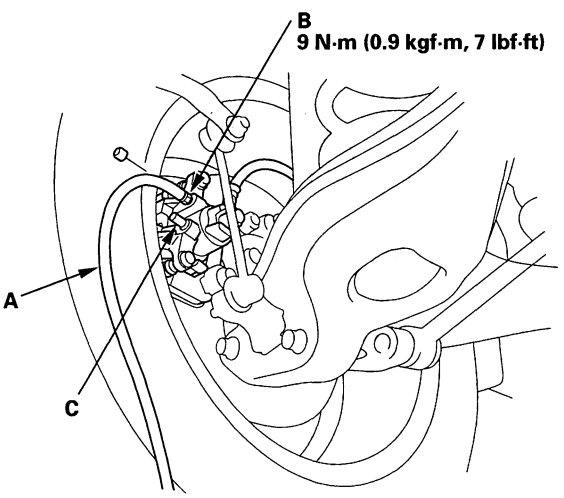


5. Refill the master cylinder reservoir to the MAX (upper) level line.

6. Repeat the procedure for each brake line until no air bubbles are in the fluid.

Protected by AR



## Brake System Indicator Circuit Diagram

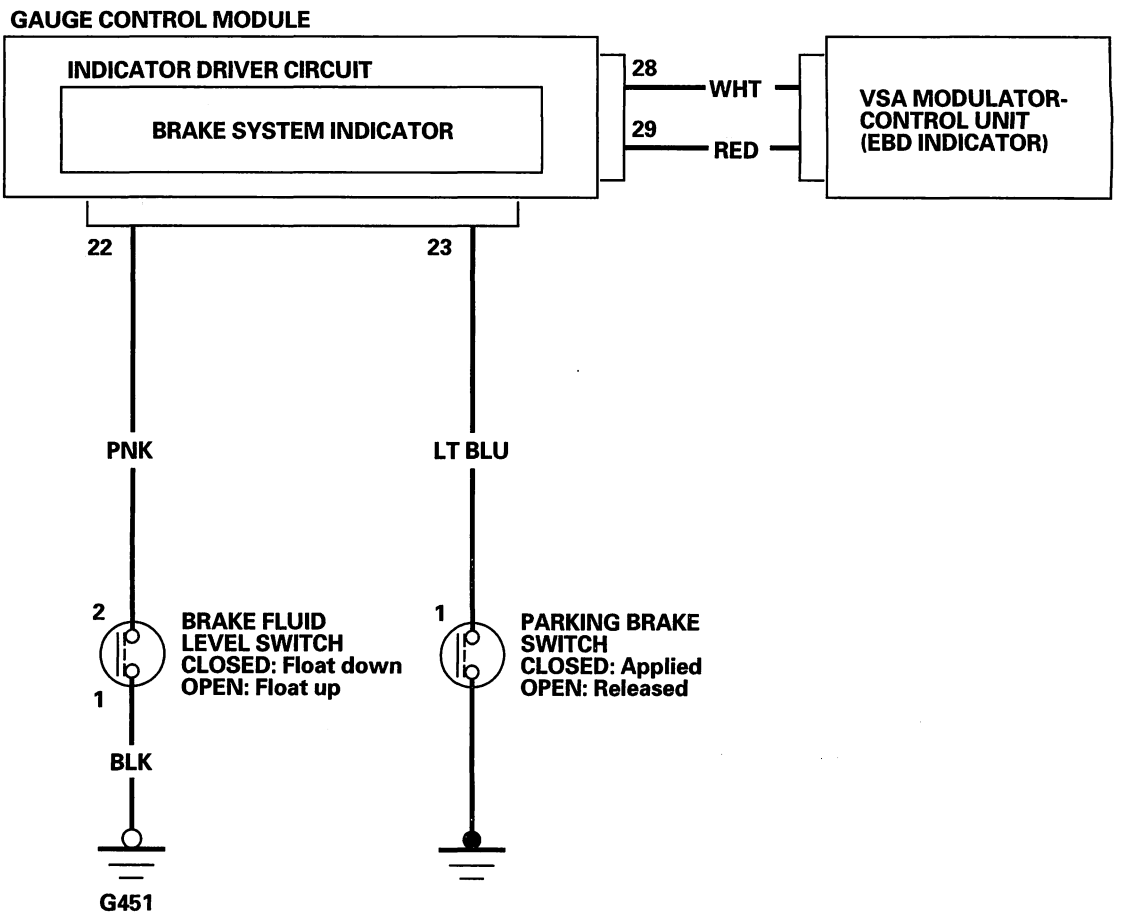




BACK

Protected by AR

## Parking Brake Switch Test

NOTE: If both the ABS/VSA indicator and the brake system indicator come on at the same time, check the VSA system first (see page 19-83).

1. Disconnect the parking brake switch connector (A) from the parking brake switch (B).

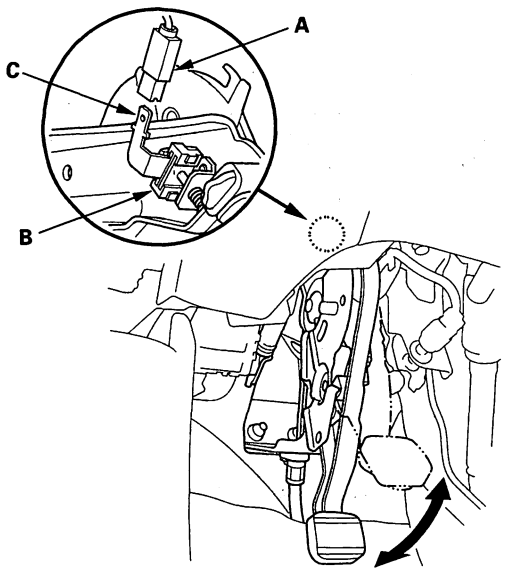


2. Check for continuity between the positive terminal (C) and body ground.

   - With the parking brake pedal pressed, there should be continuity.
   - With the parking brake pedal released, there should be no continuity.

   NOTE: If the parking brake switch and fluid level switch are OK, but the brake system indicator does not function, check the VSA system (see page 19-83).

## Brake Fluid Level Switch Test

Check for continuity between the terminals (1) and (2) with the float in the down position and in the up position.

NOTE:
- Remove the brake fluid completely from the reservoir. With the float down, there should be continuity.
- Fill the reservoir with brake fluid to the MAX (upper) level (A). With the float up, there should be no continuity.
- If both the ABS/VSA indicator and the brake system indicator come on at the same time, check the VSA system first (see page 19-83).
- If the parking brake switch and fluid level switch are OK, but brake system indicator does not function, check the VSA system (see page 19-83).

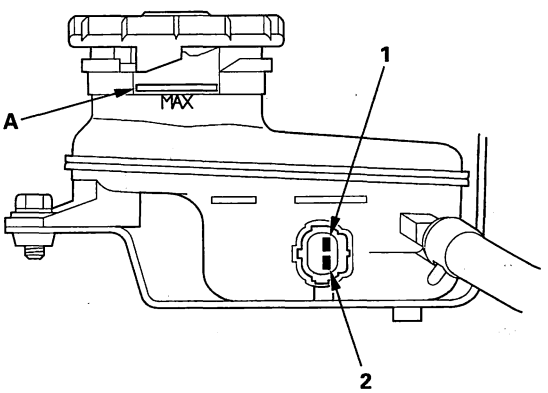

Protected by AR



## Front Brake Pad Inspection and Replacement

**Special Tools Required**
Brake caliper piston compressor 07AAE-SEPA101

**⚠CAUTION**

Frequent inhalation of brake pad dust, regardless of material composition, could be hazardous to your health.
- Avoid breathing dust particles.
- Never use an air hose or brush to clean brake assemblies. Use an OSHA-approved vacuum cleaner.

### Inspection

1. Raise the front of the vehicle, and support it with safety stands in the proper locations (see page 1-7).
2. Remove the front wheels.
3. Check the thickness (A) of the inner pad (B) and outer pad (C). Do not include the thickness of the backing plate.

   **Brake pad thickness:**
   **Standard: 11.5—12.2 mm (0.45—0.48 in.)**
   **Service limit: 1.6 mm (0.06 in.)**

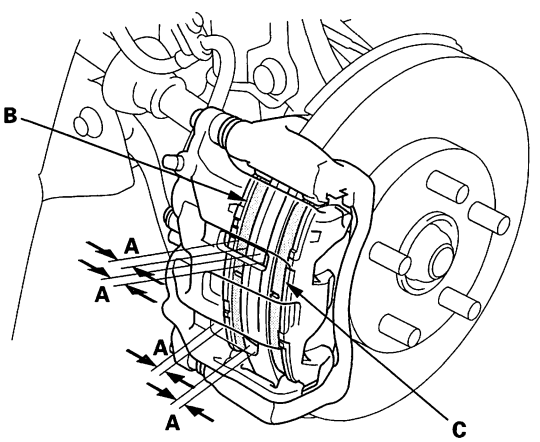


4. If the brake pad thickness is less than the service limit, replace the front brake pads as a set.

### Replacement

1. Remove some brake fluid from the master cylinder.
2. Raise the front of the vehicle, and support it with safety stands in the proper locations (see page 1-7).
3. Remove the front wheels.
4. Remove the flange bolt (A) while holding the caliper pin (B) with a wrench. Be careful not to damage the pin boot, and pivot the caliper (C) up out of the way. Check the hose and pin boots for damage and deterioration.

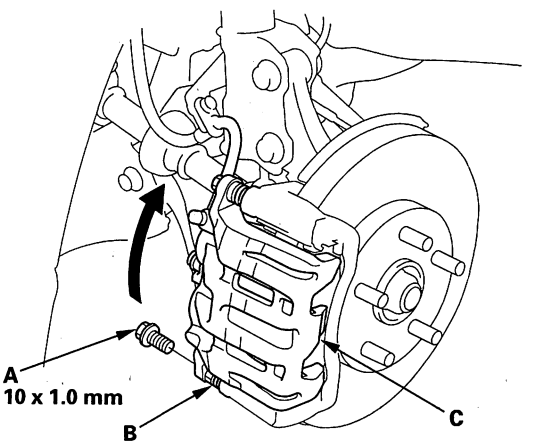


5. Remove the pad shims (A) and brake pads (B).

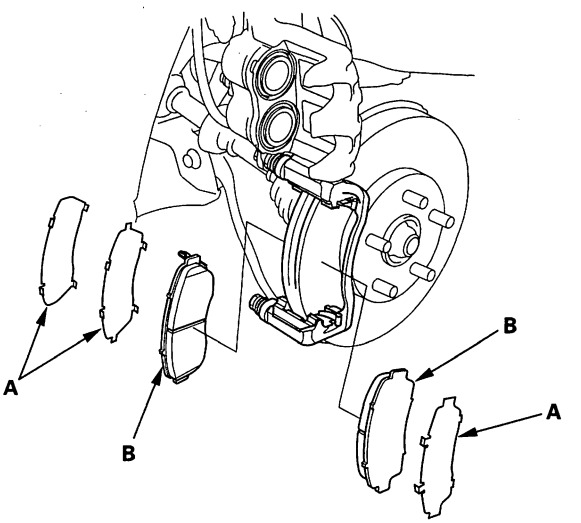




BACK

Protected by AR

6. Remove the pad retainers (A).

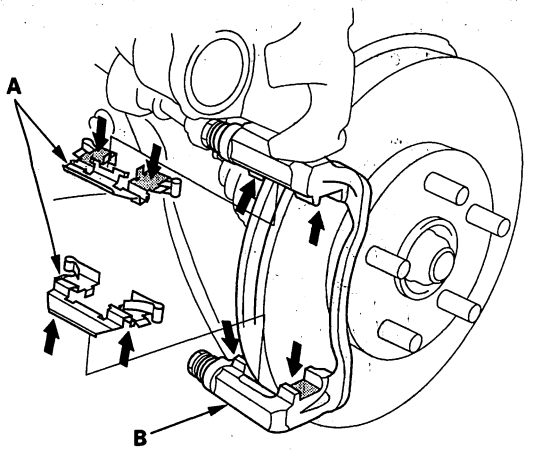


7. Clean the caliper bracket (B) thoroughly; remove any rust, and check for grooves and cracks.

8. Check the brake disc for damage and cracks.

9. Apply a thin coat of M-77 assembly paste (P/N 08798-9010) to the retainers on their mating surfaces (indicated by the arrows) against the caliper bracket.

10. Install the pad retainers. Wipe excess assembly paste off the retainers. Keep any assembly paste off the discs and pads.

11. Mount the brake caliper piston compressor (A) on the caliper body (B).

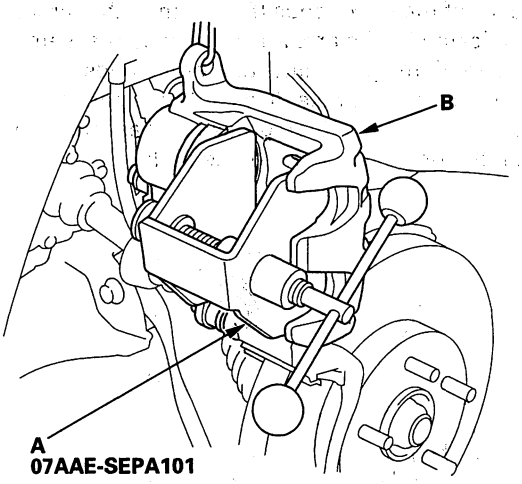


12. Press in the piston with the brake caliper piston compressor so the caliper will fit over the brake pads. Make sure the piston boot is in position to prevent damaging it when pivoting the caliper down.

    NOTE: Be careful when pressing in the piston; brake fluid might overflow from the master cylinder's reservoir.

13. Remove the brake caliper piston compressor.

(cont'd)

Protected by AR



## Front Brake Pad Inspection and Replacement (cont'd)

14. Apply a thin coat of M-77 assembly paste (P/N 08798-9010) to the pad side of the shims (A), the back of the brake pads (B) and the other areas indicated by the arrows. Wipe excess assembly paste off the pad shims and brake pads. Contaminated brake discs or brake pads reduce stopping ability. Keep grease and assembly paste off the brake discs and brake pads.

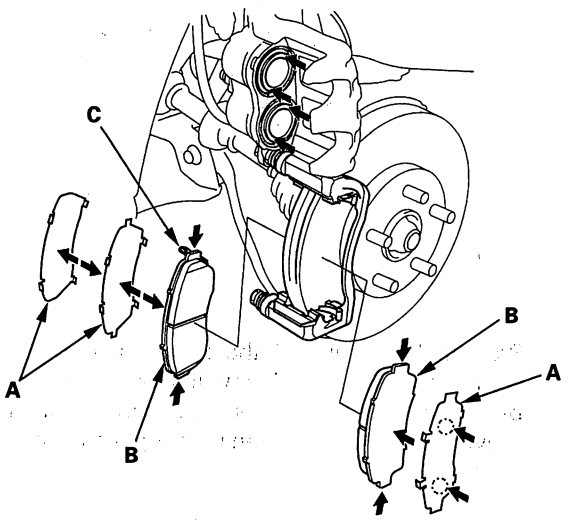


15. Install the brake pads and pad shims correctly. Install the brake pad with the wear indicator (C) on the upper inside. If you are reusing the brake pads, always reinstall the brake pads in their original positions to prevent a momentary loss of braking efficiency.

16. Pivot the caliper down into position. Install the flange bolt (A), and tighten it to the specified torque while holding the caliper pin (B) with a wrench. Be careful not to damage the pin boot.

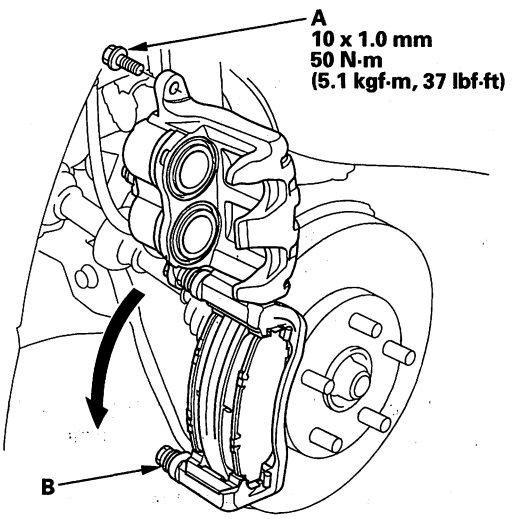


17. Press the brake pedal several times to make sure the brakes work.

    NOTE: Engagement may require a greater pedal stroke immediately after the brake pads have been replaced as a set. Several applications of the brake pedal will restore the normal pedal stroke.

18. Add brake fluid as needed.

19. After installation, check for leaks at hose and line joints or connections, and retighten if necessary. Test-drive the vehicle, then check for leaks (see page 19-36).



BACK

Protected by AR

# Front Brake Disc Inspection

## Runout

1. Raise the front of the vehicle, and support it with safety stands in the proper locations (see page 1-7).
2. Remove the front wheels.
3. Remove the brake pads (see page 19-12).
4. Inspect the brake disc surface for damage and cracks. Clean the brake disc thoroughly, and remove all rust.
5. Install suitable flat washers (A) and wheel nuts (B), and tighten the wheel nuts to the specified torque to hold the brake disc securely against the hub.

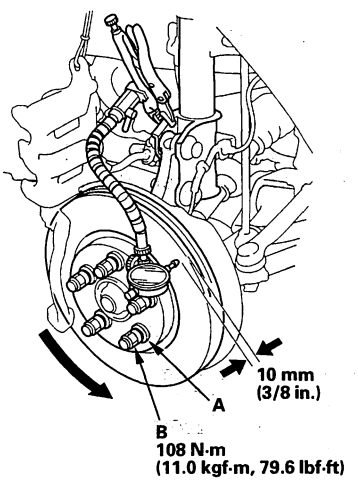


6. Set up the dial gauge against the brake disc as shown, and measure the runout at 10 mm (3/8 in.) from the outer edge of the brake disc.

   **Brake disc runout:**
   **Service limit: 0.04 mm (0.0016 in.)**

7. If the brake disc is beyond the service limit, refinish the brake disc with an on-car brake lathe. The Kwik-Lathe produced by Kwik-Way Manufacturing Co. and the "Front Brake Disc Lathe" offered by Snap-on Tools Co. are approved for this operation.

   **Max. refinishing limit: 26.0 mm (1.02 in.)**

   NOTE:
   - If the brake disc is beyond the service limit for refinishing, replace it (see page 18-13).
   - A new brake disc should be refinished if its runout is greater than 0.04 mm (0.0016 in.).

## Thickness and Parallelism

1. Raise the front of the vehicle, and support it with safety stands in the proper locations (see page 1-7).
2. Remove the front wheels.
3. Remove the brake pads (see page 19-12).
4. Using a micrometer, measure the brake disc thickness at eight points, about 45 ° apart and 10 mm (3/8 in.) in from the outer edge of the brake disc. Replace the brake disc if the smallest measurement is less than the max. refinishing limit.

   **Brake disc thickness:**
   **Standard: 27.8—28.1 mm (1.09—1.11 in.)**
   **Max. refinishing limit: 26.0 mm (1.02 in.)**
   **Brake disc parallelism: 0.015 mm (0.0006 in.) max.**

   NOTE: This is the maximum allowable difference between the thickness measurements.

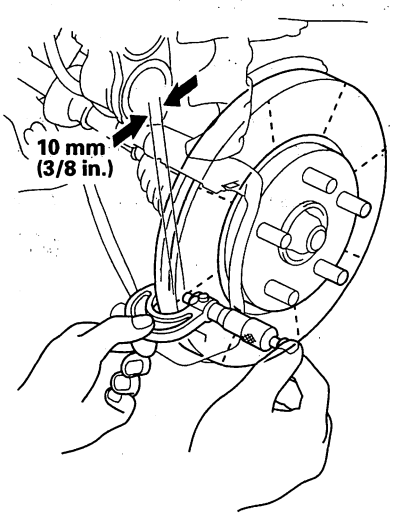


5. If the brake disc is beyond the service limit for parallelism, refinish the brake disc with an on-car brake lathe. The Kwik-Lathe produced by Kwik-Way Manufacturing Co. and the "Front Brake Disc Lathe" offered by Snap-on Tools Co. are approved for this operation.

   NOTE: If the brake disc is beyond the service limit for refinishing, replace it (see page 18-13).

Protected by AR

# Conventional Brake Components

## Front Brake Caliper Overhaul

**⚠CAUTION**

Frequent inhalation of brake pad dust, regardless of material composition, could be hazardous to your health.
- Avoid breathing dust particles.
- Never use an air hose or brush to clean brake assemblies. Use an OSHA-approved vacuum cleaner.

Remove, disassemble, inspect, reassemble, and install the caliper, and note these items:

NOTE: Make sure that the caliper pins are installed correctly. Upper caliper pin B and lower caliper pin A are different. If the these caliper pins are installed in the wrong location, it will cause vibration, uneven or rapid pad wear, and possibly uneven tire wear.

- Do not spill brake fluid on the vehicle; it may damage the paint; if brake fluid gets on the paint, wash it off immediately with water.
- To prevent dripping brake fluid, cover disconnected hose joints with rags or shop towels.
- Clean all parts in brake fluid and air dry; blow out all passages with compressed air.
- Before reassembling, check that all parts are free of dirt and other foreign particles.
- Replace parts with new ones as specified in the illustration.
- Make sure no dirt or other foreign matter gets in the brake fluid.
- Make sure no grease or oil gets on the brake discs or pads.
- When reusing brake pads, always reinstall them in their original positions to prevent loss of braking efficiency.
- Do not reuse drained brake fluid. Use only clean Acura DOT 3 Brake Fluid from an unopened container. Using a non-Acura brake fluid can cause corrosion and shorten the life of the system.
- Do not mix different brands of brake fluid as they may not be compatible.
- Coat the pistons, piston seal grooves, and caliper bores with clean brake fluid.
- Replace all rubber parts with new ones whenever disassembled.
- After installing the caliper, check the brake hose and line for leaks, interference, and twisting.

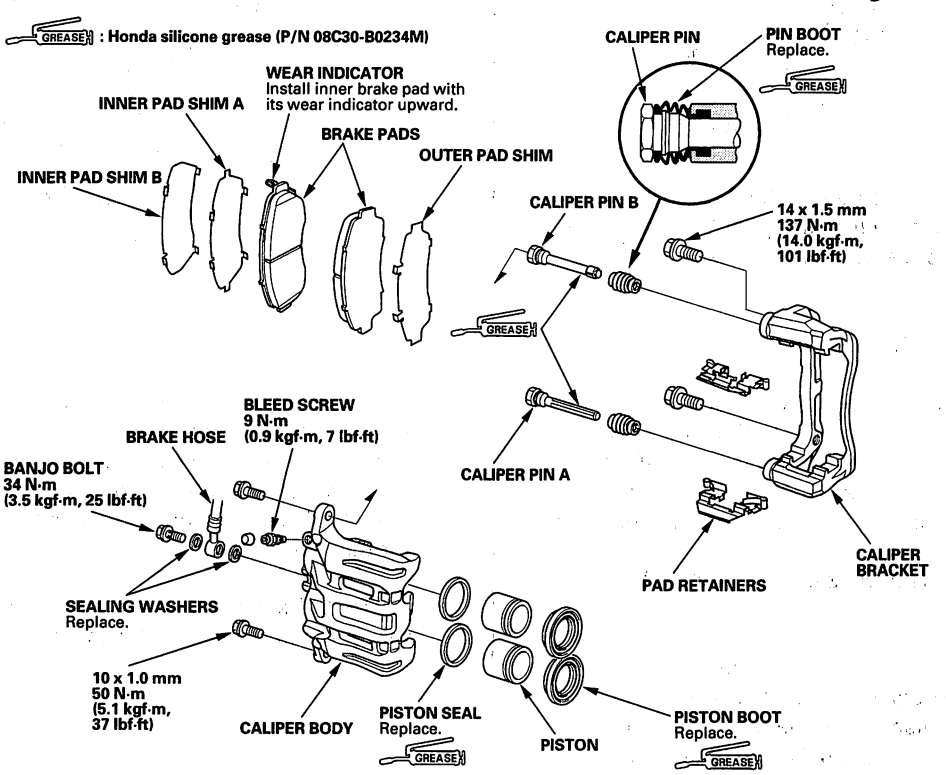




BACK

Protected by AR

## Master Cylinder Replacement

**NOTICE**

- Do not spill brake fluid on the vehicle; it may damage the paint; if brake fluid gets on the paint, wash it off immediately with water.
- Be careful not to damage or deform the brake lines during removal and inspection.
- To prevent the brake fluid from flowing, plug and cover the hose ends and joints with a shop towel or equivalent.

1. Open the air cleaner housing cover (see page 11-394).

2. Release the hooks (A), and move the under-hood fuse/relay box (B) aside. Do not disconnect the connectors.

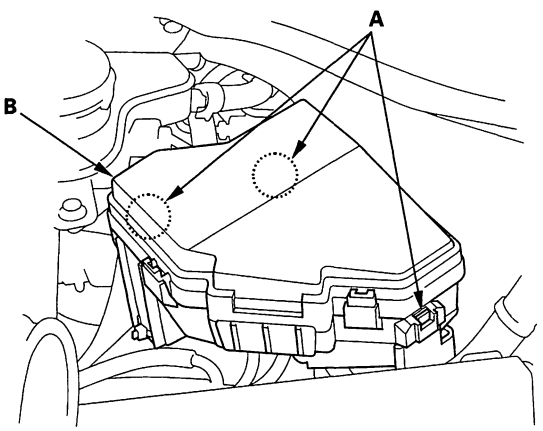


3. Remove the reservoir cap and brake fluid from the master cylinder reservoir with a syringe.

4. Disconnect the brake fluid level switch connector (A).

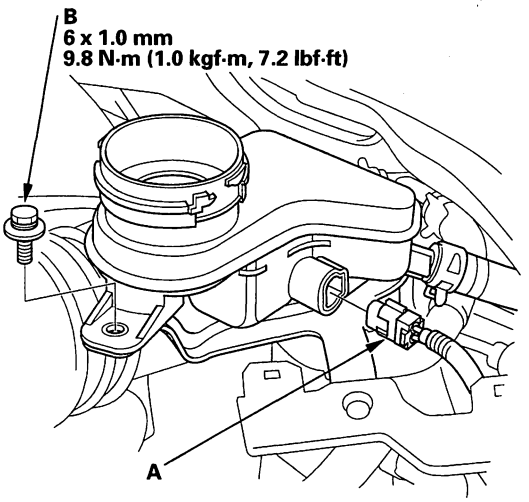


5. Remove the reservoir mounting bolt (B).

6. Remove the reservoir stay (A) with the under-hood fuse/relay box stay (B).

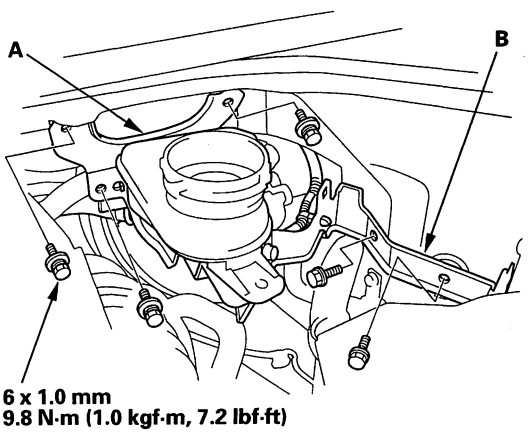


(cont'd)

Protected by AR



## Master Cylinder Replacement (cont'd)

7. Disconnect the brake lines (A) from the master cylinder (B). To prevent spills, cover the line joints with rags or shop towels.

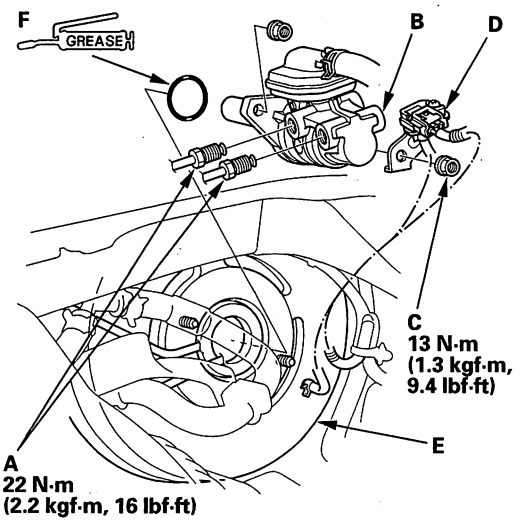


8. Remove the master cylinder mounting nuts (C).

9. Remove the brake booster pressure sensor (D) with the stay, and move it aside. Do not damage the sensor and the wire harness.

10. Remove the master cylinder from the brake booster (E). Be careful not to bend or damage the brake lines when removing the master cylinder.

11. Remove the O-ring (F) from the master cylinder.

    NOTE: Replace the O-ring whenever the master cylinder is removed.

12. Install the master cylinder in the reverse order of removal, and note these items:

    - Check the brake booster pushrod clearance (see page 19-21).
    - Coat the new O-ring with the silicone oil (Shin-Etsu KF54).
    - Check the brake pedal height and free play after installing the master cylinder, and adjust it if necessary (see page 19-6).

13. Bleed the brake system (see page 19-9).

14. Spin the wheels to check for brake drag.



BACK

Protected by AR

## Master Cylinder Inspection

1. Inspect and note these items:

   - Before reassembling, check that all parts are free of dirt and other foreign particles.
   - Do not try to disassemble the master cylinder assembly. Replace the master cylinder assembly with a new part if necessary.
   - Do not allow dirt or foreign matter to contaminate the brake fluid.

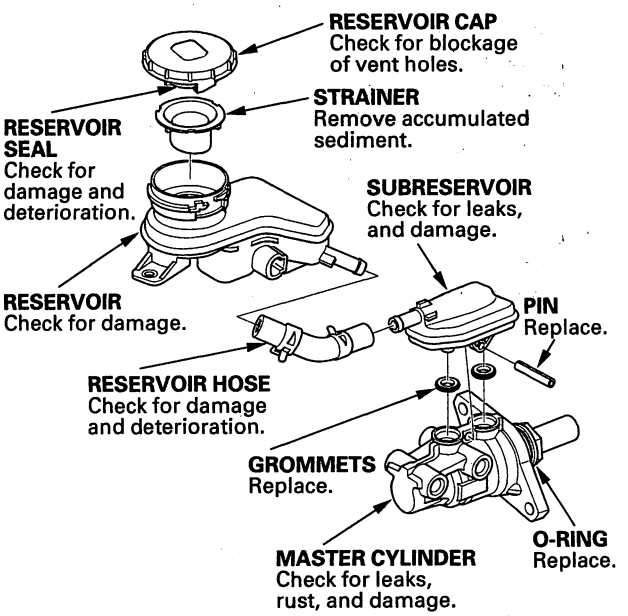


2. If the reservoir hose was disconnected, install the reservoir (A) and the reservoir hose (B) to the subreservoir (C).

   NOTE:
   - Align the rib plates (D) on the reservoir and subreservoir with the paint marks (E) on the hose.
   - Position the direction of the clamp (F).

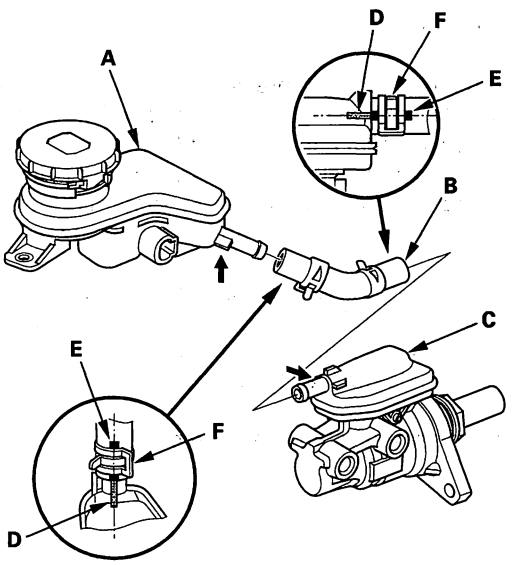

Protected by AR



## Brake Booster Test

NOTE: The brake boost system on this vehicle is assisted by a electric vacuum pump. When electric vacuum pump system indicator comes on, check the electric vacuum pump system (see page 19-43) first. But the indicator may come on when testing the brake booster. In this case, it is not a fail of electric vacuum pump system. Check for DTC with the HDS, and clear the DTCs (see page 19-46).

### Functional Test

1. With the engine off, press the brake pedal several times to deplete the vacuum reservoir, then press the brake pedal hard, and hold it for 15 seconds. If the brake pedal sinks, either the master cylinder is leaking internally, or the brake system is leaking. Inspect the brake hoses and lines (see page 19-36).

2. Start the engine with the brake pedal pressed. If the brake pedal sinks slightly, the vacuum booster is operating normally. If the brake pedal height does not vary, do the leak test.

3. Do the brake system test (see page 19-4).

### Leak Test

1. Press the brake pedal with the engine running, then stop the engine. The brake pedal height should not vary while pressed for 30 seconds. If the pedal height rises go to step 6. If it does not rise go to step 2.

2. Start the engine and let it idle for 30 seconds. Turn the ignition switch off, and wait 30 seconds. Press the brake pedal several times using normal pressure. When the pedal is first pressed, it should be low. On consecutive applications, the pedal height should gradually rise. Does the pedal rise on each consecutive application? If it rises the booster is OK. If it does not go to step 3.

3. Disconnect the brake booster vacuum hose (A) from the 3-way joint (B). The check valve (intake manifold) (C) is built into the hose.

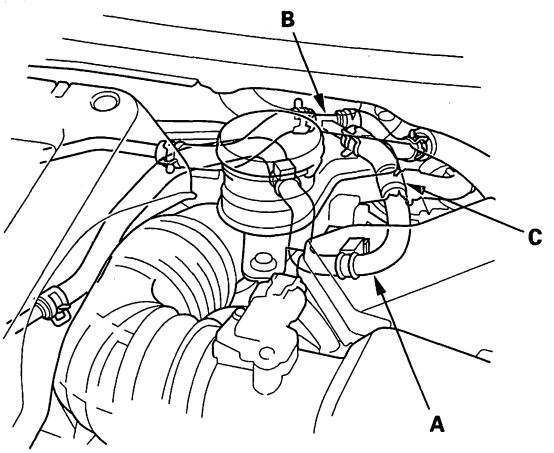


4. Start the engine, and let it idle. There should be vacuum available. If no vacuum is available, the check valve (intake manifold) is not working properly. Replace the brake booster vacuum hose and check valve (intake manifold), and retest. If vacuum is found, go to step 5.



BACK

Protected by AR

5. With the engine off, reconnect the vacuum hose to the 3-way joint.

6. Start the engine, and then pinch the brake booster vacuum hose between the 3-way joint and the booster.

7. Turn the ignition switch off, and wait 30 seconds. Press the brake pedal several times using normal pressure. When the pedal is first pressed, it should be low. On consecutive applications, the pedal height should gradually rise.

   - If the pedal position does not vary go to step 8.
   - If the pedal position varies, replace the brake booster vacuum hose/check valve (intake manifold) assembly.

8. Start the engine, and pinch off the booster vacuum hose between the 3-way joint and electric vacuum pump.

9. Turn the ignition switch off, and wait 30 seconds. Press the brake pedal several times using normal pressure. When the pedal is first pressed, it should be low. On consecutive applications, the pedal height should gradually rise.

   - If the pedal position does not vary inspect the seal between the master cylinder and booster. If the seal is OK, replace the brake booster.
   - If the pedal positions varies, inspect the vacuum hose between the 3-way joint and the electric vacuum pump check valve. If the hose is OK, replace the vacuum hose/check valve (vacuum pump).

## Brake Booster Pushrod Clearance Adjustment

**Special Tools Required**
Booster piston holder 070AB-SJA0100

NOTE:
- Brake booster pushrod to piston clearance must be checked and readjusted before installing a new master cylinder.
- The master cylinder assembly comes with a tool that must be used to adjust the clearance between the brake booster pushrod and the master cylinder piston.
- Use only the tool that comes with the new master cylinder to check the pushrod clearance. Do not use any other tool.
- Make sure to discard the tool supplied with the master cylinder after its use.
- The brake booster must be installed on the vehicle before doing the pushrod clearance adjustment.
- If the booster is removed, check the pushrod length (A) as shown. If the length is incorrect, loosen the pushrod locknut (B), and turn the yoke (C) in or out to adjust, then install the master cylinder.

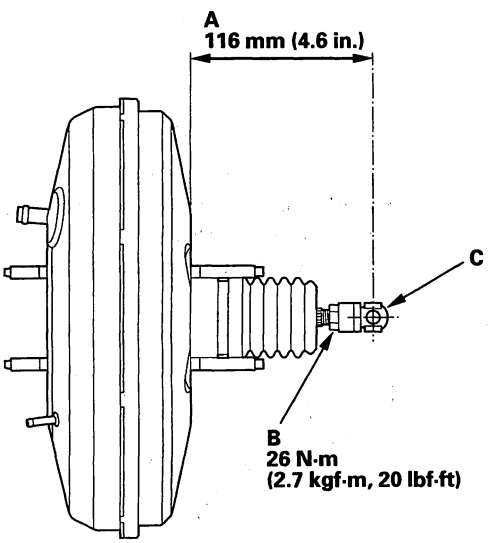


(cont'd)

Protected by AR



## Brake Booster Pushrod Clearance Adjustment (cont'd)

1. Measure the clearance between the plate (A) supplied with master cylinder and brake booster pushrod (B). Make sure that the tool is lying flat against the surface (C) of the brake booster, and that the tip of the tool contacts the pushrod. If the tool will not lie flat (D) or there is a gap (E) between the tool and the pushrod, go to step 2 to adjust the pushrod in or out.

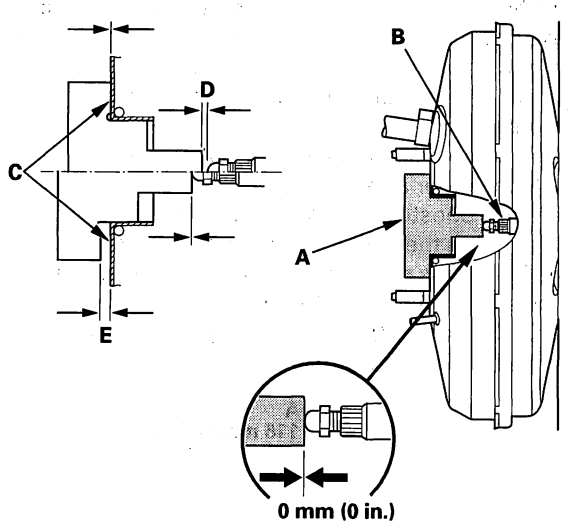


2. If the clearance is incorrect, use the booster piston holder to hold the pushrod (A), and turn the adjusting screw (B) clockwise to increase clearance or counterclockwise to decrease clearance.

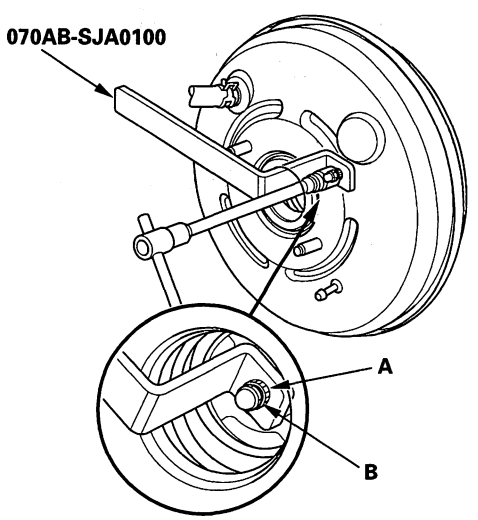


3. Install the master cylinder (see page 19-17).

## Brake Booster Replacement

1. Remove the air cleaner (see page 11-394).
2. Remove the master cylinder (see page 19-17).
3. Disconnect the vacuum hose (A) and the brake booster pressure sensor hose (B) from the brake booster (C).

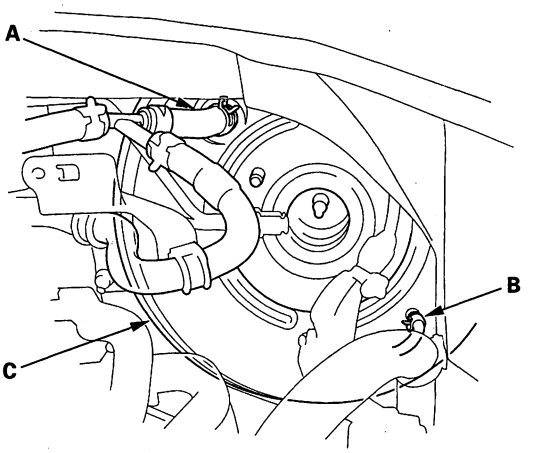


4. Remove the brake lines (A) from the clamp (B).

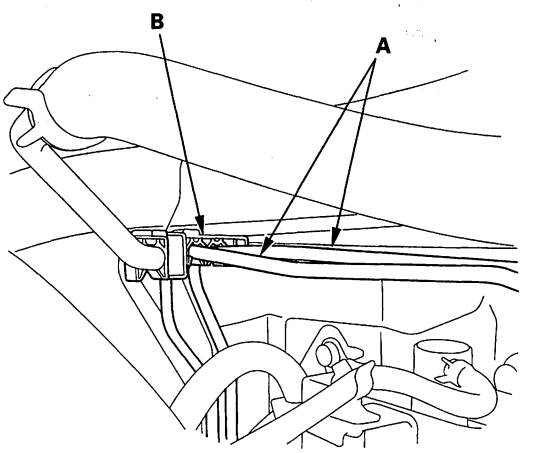




BACK

Protected by AR

5. Remove the heater hose (A) from the clamp (B).

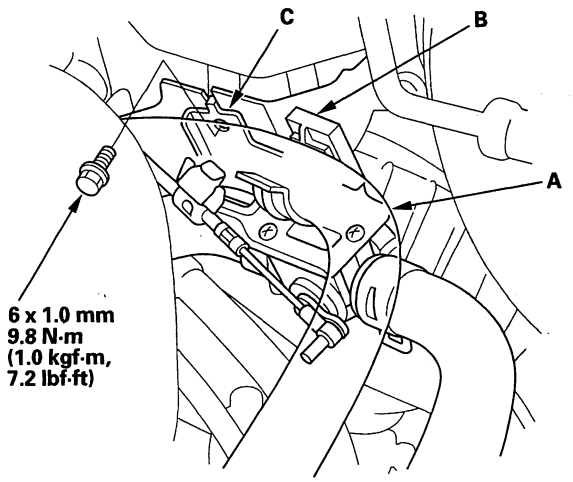


6. Remove the water valve mounting bracket (C). Do not disconnect the heater hoses.

7. Remove the driver's dashboard undercover (see page 20-98).

8. Remove the lock pin (A) and the joint pin (B), then disconnect the yoke from the brake pedal.

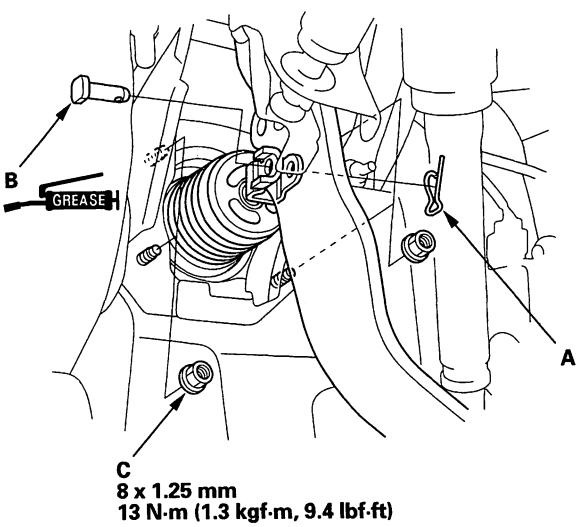


9. Remove the brake booster mounting nuts (C).

10. Pull the brake booster (A) forward, then move the brake booster to the front side while turning it.

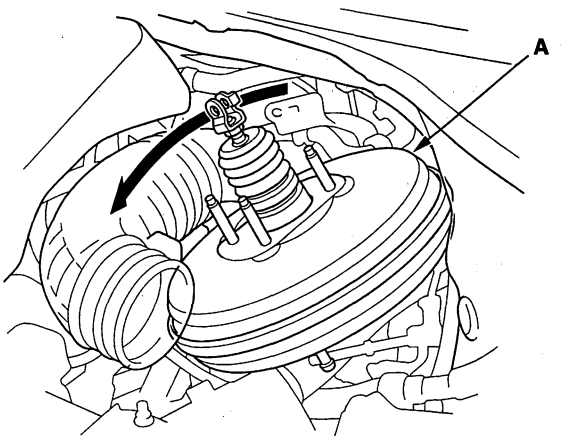


11. Remove the brake booster upward from the engine compartment.

**NOTICE**

- Be careful not to damage the booster surfaces and threads of the booster stud bolts.
- Be careful not to bend or damage the brake lines.

12. install the brake booster in the reverse order of removal, and note these items:

- Adjust the pushrod length before installing the brake booster.
- Always use a new lock pin.
- Install the master cylinder after installing the brake booster (see page 19-17).
- Check the brake pedal height and free play after installing the master cylinder, and adjust it (see page 19-6).
- Bleed the brake system (see page 19-9).

Protected by AR



## Rear Brake Pad Inspection and Replacement

**Special Tools Required**
Brake caliper piston compressor 07AAE-SEPA101

**⚠CAUTION**

Frequent inhalation of brake pad dust, regardless of material composition, could be hazardous to your health.
- Avoid breathing dust particles.
- Never use an air hose or brush to clean brake assemblies. Use an OSHA-approved vacuum cleaner.

### Inspection

1. Raise the rear of the vehicle, and support it with safety stands in the proper locations (see page 1-7).
2. Remove the rear wheels.
3. Check the thickness (A) of the inner pad (B) and outer pad (C). Do not include the thickness of the backing plate.

   **Brake pad thickness:**
   **Standard: 8.3—9.0 mm (0.33—0.35 in.)**
   **Service limit: 1.6 mm (0.06 in.)**

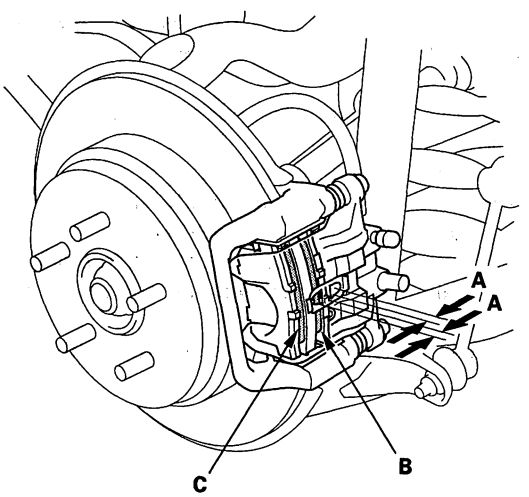


4. If the brake pad thickness is less than the service limit, replace the rear brake pads as a set.

### Replacement

1. Remove some brake fluid from the master cylinder.
2. Raise the rear of the vehicle, and support it with safety stands in the proper locations (see page 1-7).
3. Remove the rear wheels.
4. Remove the flange bolt (A) while holding the caliper pin (B) with a wrench. Be careful not to damage the pin boot, and pivot the caliper (C) up out of the way. Check the hose and pin boots for damage and deterioration.

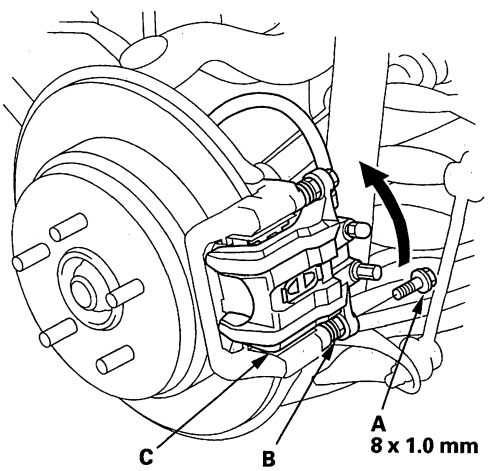


5. Remove the pad shims (A) and brake pads (B).

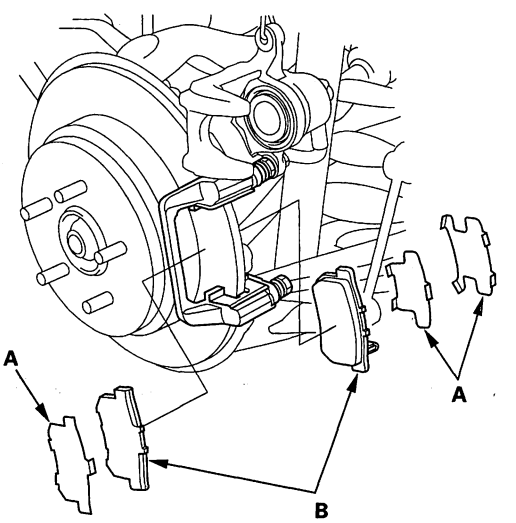




BACK

Protected by AR

6. Remove the pad retainers (A).

   NOTE: The upper and lower pad retainers are different. During installation, make sure the pad retainers are in proper positions.

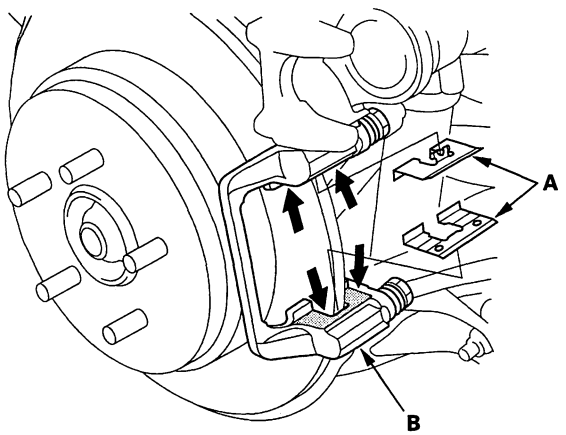


7. Clean the caliper bracket (B) thoroughly; remove any rust, and check for grooves and cracks.

8. Check the brake disc/drum for damage and cracks.

9. Apply a thin coat of M-77 assembly paste (P/N 08798-9010) to the retainers on their mating surfaces (indicated by the arrows) against the caliper bracket.

10. Install the pad retainers. Wipe excess assembly paste off the retainers. Keep any assembly paste off the discs and pads.

11. Mount the brake caliper piston compressor (A) on the caliper body (B).

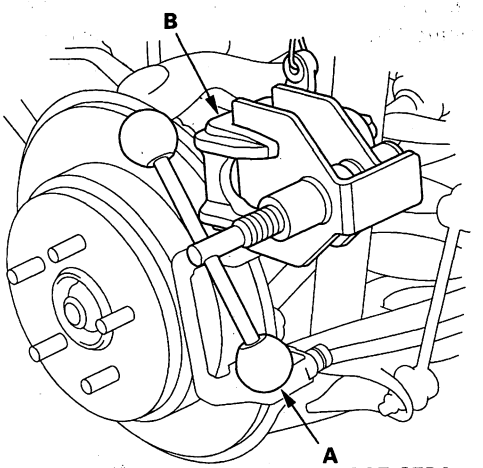


07AAE-SEPA101

12. Press in the piston with the brake caliper piston compressor so the caliper will fit over the brake pads. Make sure the piston boot is in position to prevent damaging it when pivoting the caliper down.

    NOTE: Be careful when pressing in the piston; brake fluid might overflow from the master cylinder's reservoir.

13. Remove the brake caliper piston compressor.

(cont'd)

Protected by AR



## Rear Brake Pad Inspection and Replacement (cont'd)

14. Apply a thin coat of M-77 assembly paste (P/N 08798-9010) to the pad side of the shims (A), the back of the brake pads (B) and the other areas indicated by the arrows. Wipe excess assembly paste off the pad shims and brake pads. Contaminated brake discs or brake pads reduce stopping ability. Keep grease and assembly paste off the brake discs and brake pads.

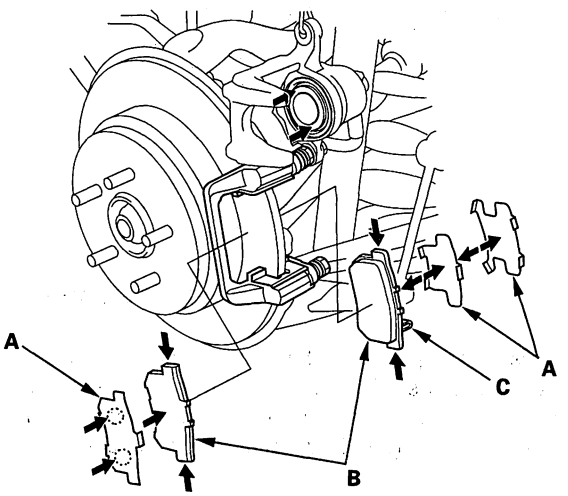


15. Install the brake pads and pad shims correctly. Install the brake pad with the wear indicator (C) on the bottom inside. If you are reusing the brake pads, always reinstall the brake pads in their original positions to prevent a momentary loss of braking efficiency.

16. Pivot the caliper down into position. Install the flange bolt (A), and tighten it to the specified torque while holding the caliper pin (B) with a wrench. Be careful not to damage the pin boots.

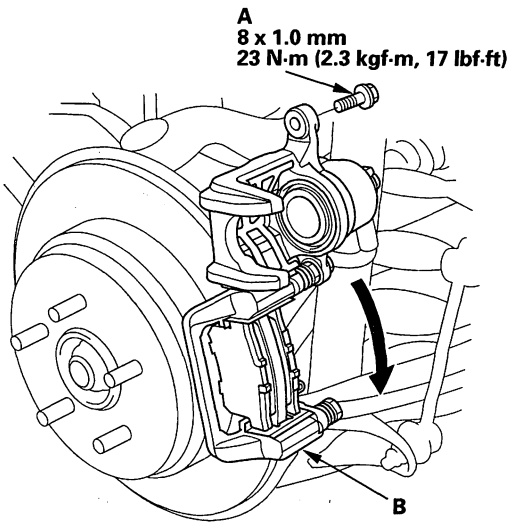


17. Press the brake pedal several times to make sure the brakes work.

    NOTE: Engagement may require a greater pedal stroke immediately after the brake pads have been replaced as a set. Several applications of the brake pedal will restore the normal pedal stroke.

18. Add brake fluid as needed.

19. After installation, check for leaks at hose and line joints or connections, and retighten if necessary. Test-drive the vehicle, then check for leaks (see page 19-36).



BACK

Protected by AR

# Rear Brake Disc Inspection

## Runout

1. Raise the rear of the vehicle, and support it with safety stands in the proper locations (see page 1-7).

2. Remove the rear wheels.

3. Remove the brake pads (see page 19-24).

4. Inspect the brake disc/drum surface for damage and cracks. Clean the brake disc/drum thoroughly, and remove all rust.

5. Install suitable flat washers (A) and wheel nuts (B), and tighten the wheel nuts to the specified torque to hold the brake disc/drum securely against the hub.

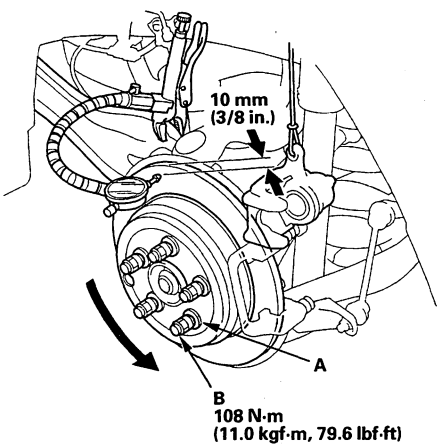


6. Set up the dial gauge against the brake disc/drum as shown, and measure the runout at 10 mm (3/8 in.) from the outer edge of the brake disc/drum.

   **Brake disc/drum runout:**
   **Service limit: 0.04 mm (0.0016 in.)**

7. If the brake disc/drum is beyond the service limit, refinish the brake disc/drum with an on-car brake lathe. The Kwik-Lathe produced by Kwik-Way Manufacturing Co. and the "Front Brake Disc Lathe" offered by Snap-on Tools Co. are approved for this operation.

   **Max. refinishing limit: 7.5 mm (0.30 in.)**

   NOTE:
   - If the brake disc/drum is beyond the service limit for refinishing, replace it (see page 18-32).
   - A new brake disc/drum should be refinished if its runout is greater than 0.04 mm (0.0016 in.).

## Thickness and Parallelism

1. Raise the rear of the vehicle, and support it with safety stands in the proper locations (see page 1-7).

2. Remove the rear wheels.

3. Remove the brake pads (see page 19-24).

4. Using a micrometer, measure the brake disc/drum thickness at eight points, about 45 ° apart and 10 mm (3/8 in.) in from the outer edge of the brake disc/drum. Replace the brake disc/drum if the smallest measurement is less than the max. refinishing limit.

   **Brake disc/drum thickness:**
   **Standard: 8.9—9.1 mm (0.35—0.36 in.)**
   **Max. refinishing limit: 7.5 mm (0.30 in.)**
   **Brake disc/drum parallelism:**
   **0.015 mm (0.0006 in.) max.**

   NOTE: This is the maximum allowable difference between the thickness measurements.

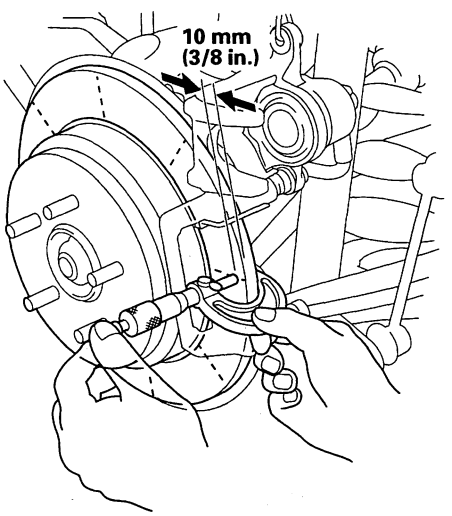


5. If the brake disc/drum is beyond the service limit for parallelism, refinish the brake disc/drum with an on-car brake lathe. The Kwik-Lathe produced by Kwik-Way Manufacturing Co. and the "Front Brake Disc Lathe" offered by Snap-on Tools Co. are approved for this operation.

   NOTE: If the brake disc/drum is beyond the service limit for refinishing, replace it (see page 18-32).

Protected by AR

# Conventional Brake Components

## Rear Brake Caliper Overhaul

**⚠CAUTION**

Frequent inhalation of brake pad dust, regardless of material composition, could be hazardous to your health.
- Avoid breathing dust particles.
- Never use an air hose or brush to clean brake assemblies. Use an OSHA-approved vacuum cleaner.

Remove, disassemble, inspect, reassemble, and install the caliper, and note these items:

- Do not spill brake fluid on the vehicle; it may damage the paint; if brake fluid gets on the paint, wash it off immediately with water.
- To prevent dripping brake fluid, cover disconnected hose joints with rags or shop towels.
- Clean all parts in brake fluid and air dry; blow out all passages with compressed air.
- Before reassembling, check that all parts are free of dirt and other foreign particles.
- Replace parts with new ones as specified in the illustration.
- Make sure no dirt or other foreign matter gets in the brake fluid.
- Make sure no grease or oil gets on the brake discs or pads.
- When reusing brake pads, always reinstall them in their original positions to prevent loss of braking efficiency.
- Do not reuse drained brake fluid. Use only clean Acura DOT 3 Brake Fluid from an unopened container. Using a non-Acura brake fluid can cause corrosion and shorten the life of the system.
- Do not mix different brands of brake fluid as they may not be compatible.
- Coat the pistons, piston seal grooves, and caliper bores with clean brake fluid.
- Replace all rubber parts with new ones whenever disassembled.
- After installing the caliper, check the brake hose and line for leaks, interference, and twisting.

GREASE : Honda silicone grease (P/N 08C30-B0234M)

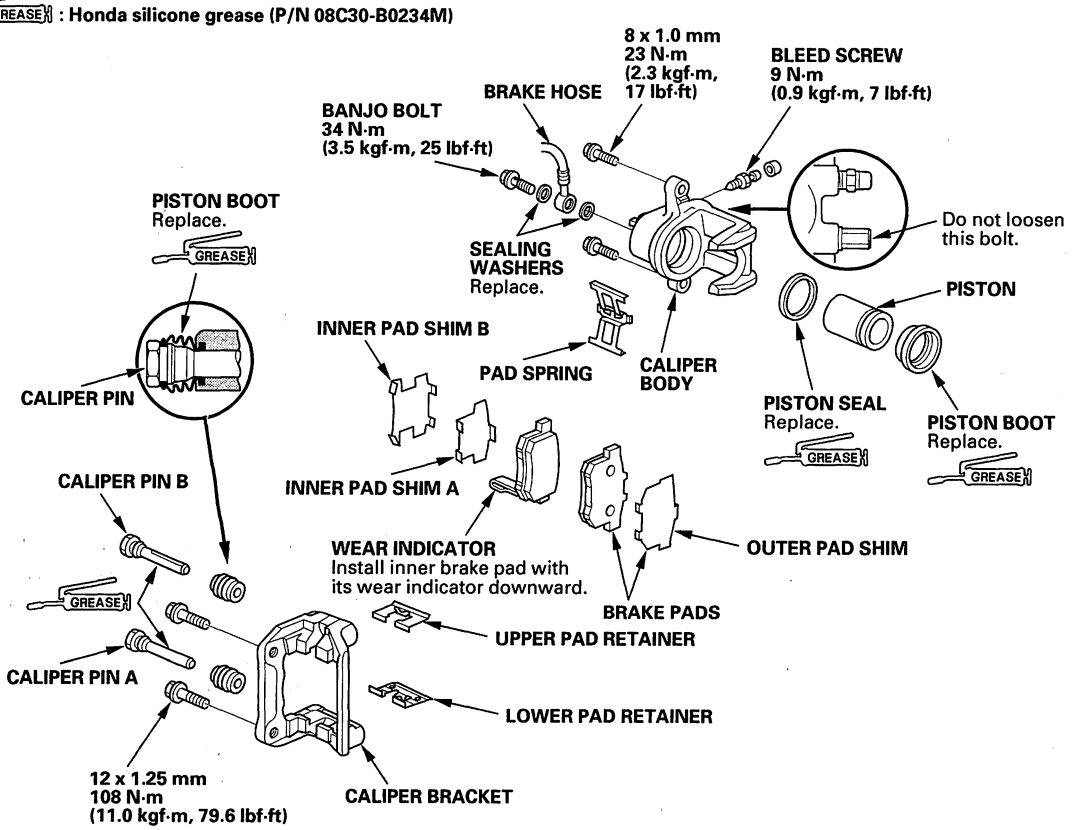




BACK

Protected by AR

## Parking Brake Inspection

**⚠CAUTION**

Frequent inhalation of brake pad dust, regardless of material composition, could be hazardous to your health.
- Avoid breathing dust particles.
- Never use an air hose or brush to clean brake assemblies. Use an OSHA-approved vacuum cleaner.

1. Raise the rear of the vehicle, and support it with safety stands in the proper locations (see page 1-7).
2. Remove the rear wheels.
3. Release the parking brake, and remove the rear brake caliper and brake disc/drum (see page 18-32).

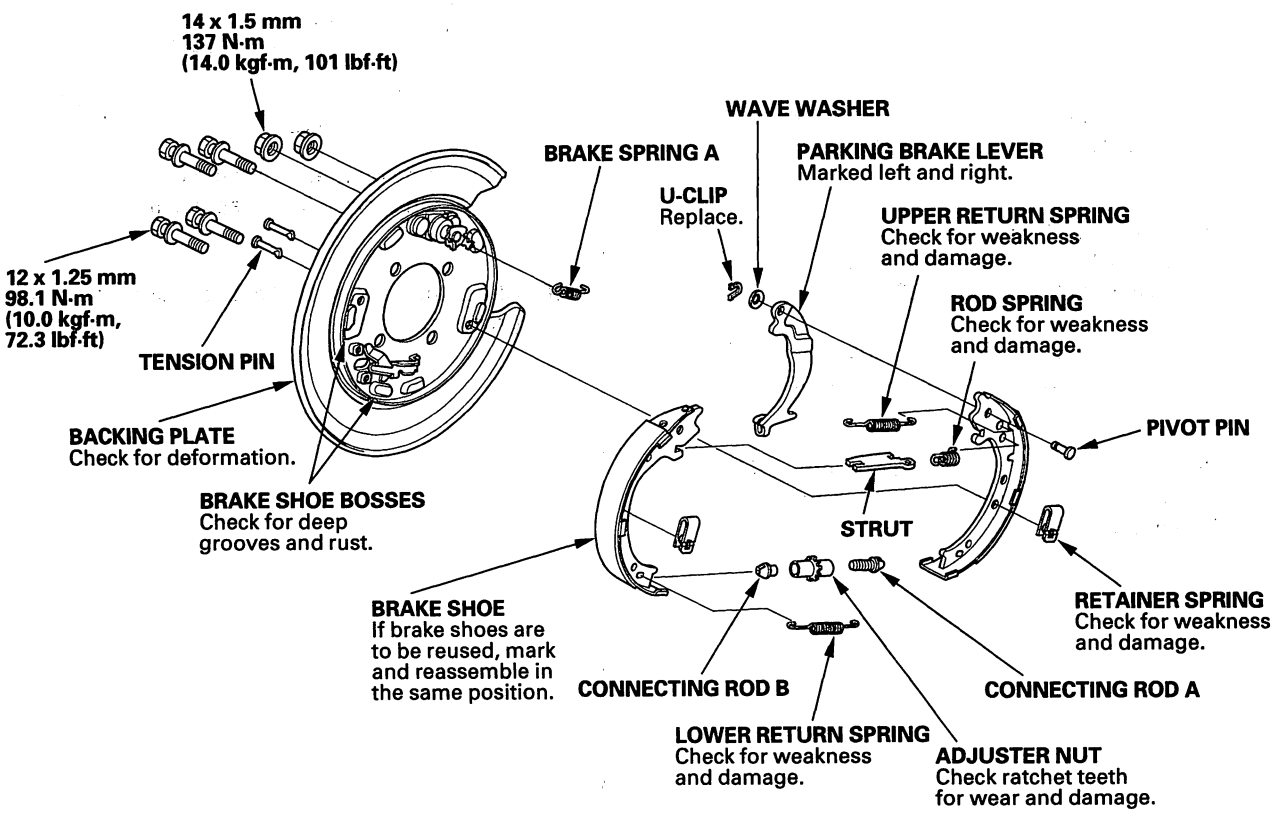


(cont'd)

Protected by AR



## Parking Brake Inspection (cont'd)

4. Check the parking brake linings (A) for cracking, glazing, wear, and contamination.

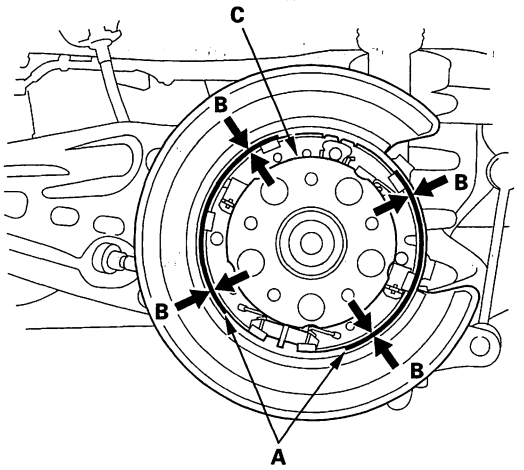


5. Measure the parking brake lining thickness (B). Measurement does not include brake shoe thickness.

   **Parking brake lining thickness:**
   **Standard: 3.2 mm (0.126 in.)**
   **Service limit: 1.0 mm (0.04 in.)**

6. If the parking brake lining thickness is less than the service limit, replace all the parking brake shoes as a set.

7. Check the hub (C) for smooth operation. If it requires servicing, replace the hub bearing unit (see page 18-32).

8. Measure the inside diameter of the parking brake drum with inside vernier calipers.

   **Parking brake drum inside diameter:**
   **Standard: 199.9—200.0 mm (7.870—7.874 in.)**
   **Service limit: 201.0 mm (7.913 in.)**

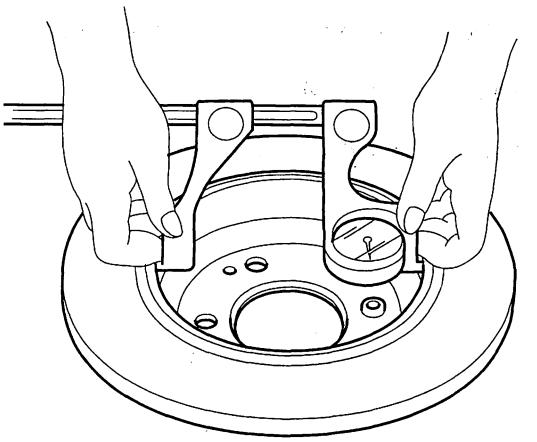

9. If the inside diameter of the parking brake drum is more than service limit, replace the brake disc/drum.

10. Check the parking brake disc/drum for scoring, grooves, and cracks.



BACK

Protected by AR

## Parking Brake Shoe Replacement

**⚠CAUTION**

Frequent inhalation of brake pad dust, regardless of material composition, could be hazardous to your health.
- Avoid breathing dust particles.
- Never use an air hose or brush to clean brake assemblies. Use an OSHA-approved vacuum cleaner.

### Disassembly

1. Raise the rear of the vehicle, and support it with safety stands in the proper locations (see page 1-7).

2. Remove the rear wheels.

3. Release the parking brake, and remove the rear brake caliper and brake disc/drum (see page 18-32).

4. Disconnect and remove the brake spring A and the upper return spring (B).

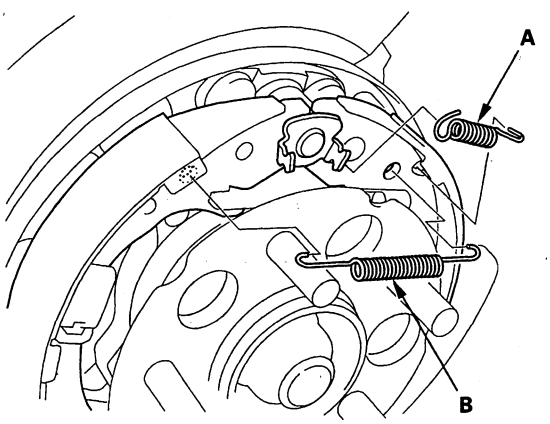


5. Disconnect and remove the lower return spring (A).

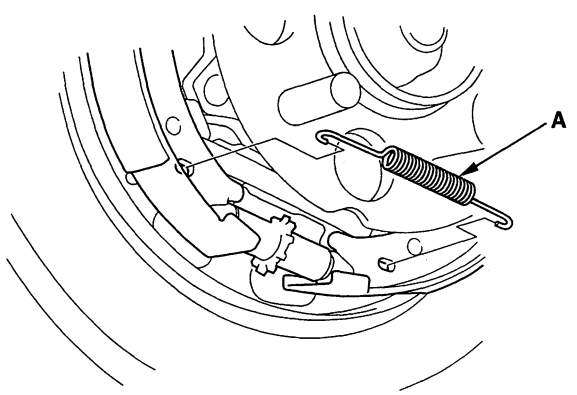


6. Remove the tension pins (A) by pushing the respective retainer spring (B) and turning the pin.

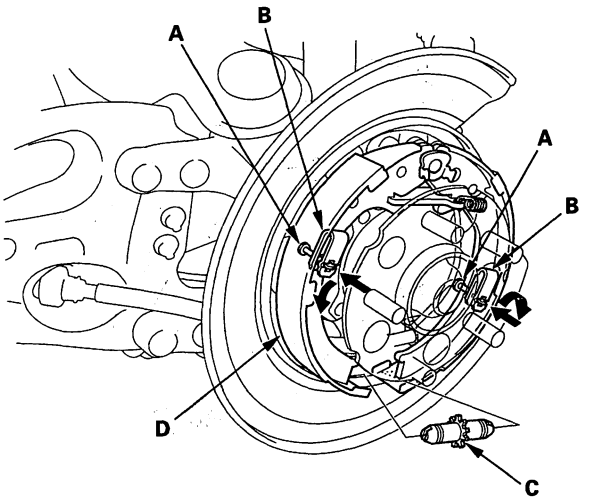


7. Remove the adjuster assembly (C) by moving forward brake shoe (D).

8. Remove the rearward brake shoe by disconnecting the parking brake cable (A) from the parking brake lever (B).

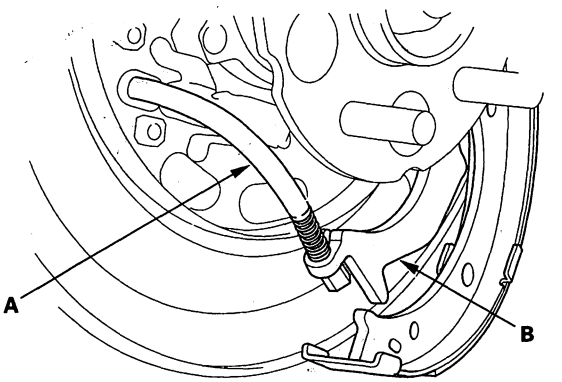


(cont'd)

Protected by AR



## Parking Brake Shoe Replacement (cont'd)

9. Disconnect the rod spring (A), and remove the strut (B).

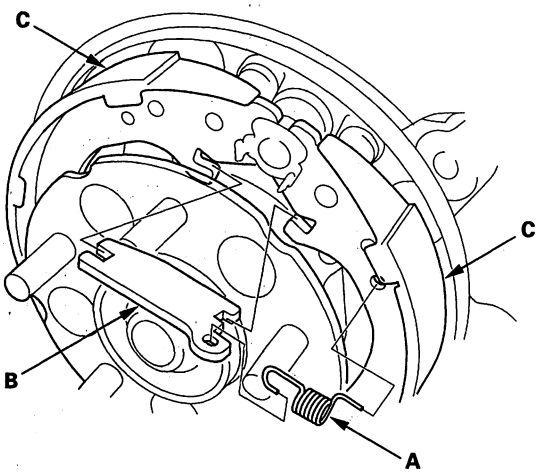


10. Remove the parking brake shoes (C).

11. Remove the U-clip (A), wave washer (B), parking brake lever (C), and pivot pin (D) from the brake shoe (E).

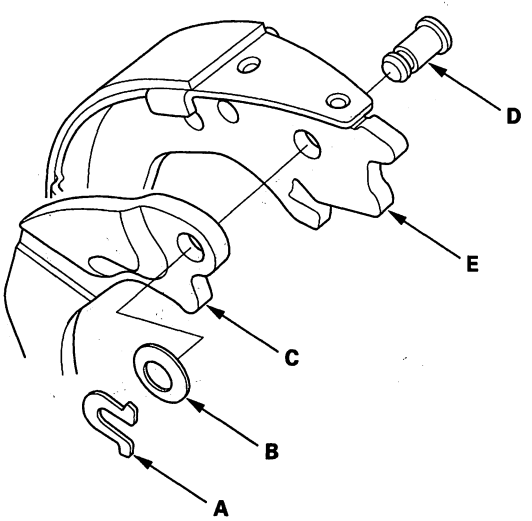


### Reassembly

1. Apply Molykote 44MA grease to the sliding surface of the pivot pin (A), and insert the pin into the rearward brake shoe (B) from the outside.

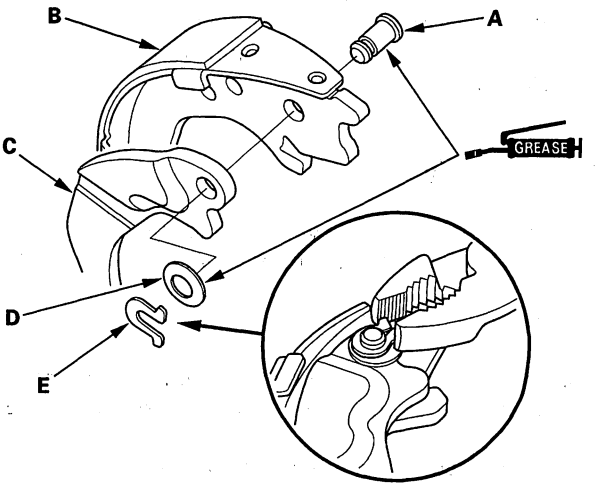


2. Install the parking brake lever (C) and wave washer (D) on the pivot pin, and secure with a new U-clip (E).

   - Install the wave washer with its convex side facing out.
   - Pinch the U-clip securely to prevent the parking brake lever coming out from the brake shoe.

3. Position the parking brake shoes (A), then hook the rod spring (B) on the strut (C) first with the spring end (D) pointing downward. Then hook the rod spring to the parking brake shoe, and install the strut on the parking brake shoes.

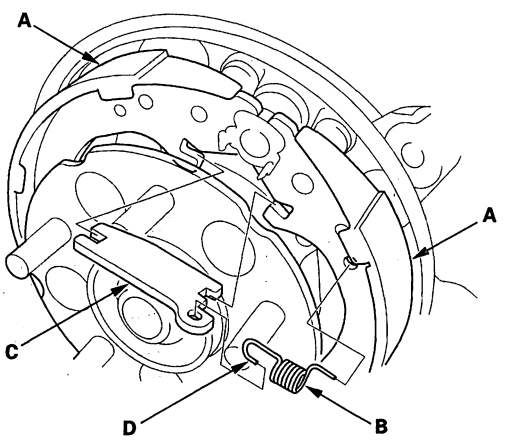




BACK

Protected by AR

4. Apply a thin coat of Molykote 44MA grease to the brake shoe ends and strut ends (A), the sliding surfaces of the parking brake shoe (B), and the pivot of the parking brake lever (C) as shown. Wipe off any excess. Keep grease off the brake linings.

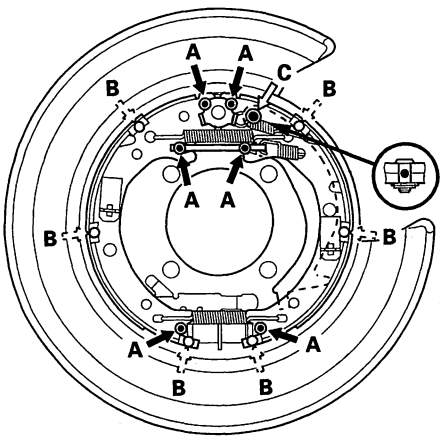


**Greasing symbols:**
- ➡ ◎ **Brake shoe ends and strut ends**
- ⇨ ○ **Sliding surfaces of the shoe**
- ⇨ ● **Pivot of parking brake lever**

5. Connect the parking brake cable (A) to the parking brake lever (B). Apply silicone grease to the cable contact surface (C) on the backing plate.

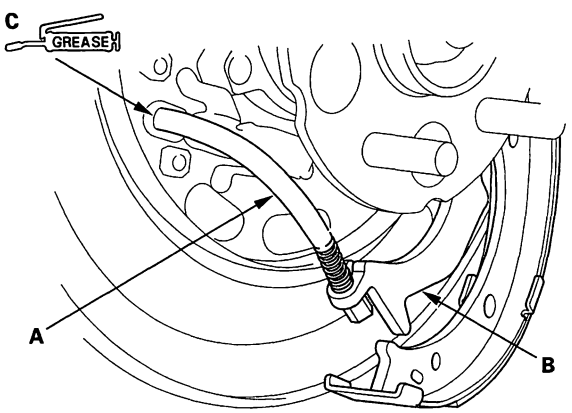


6. Install the tension pins (C) and retainer springs (D). Make sure the tension pin does not contact to the parking brake lever.

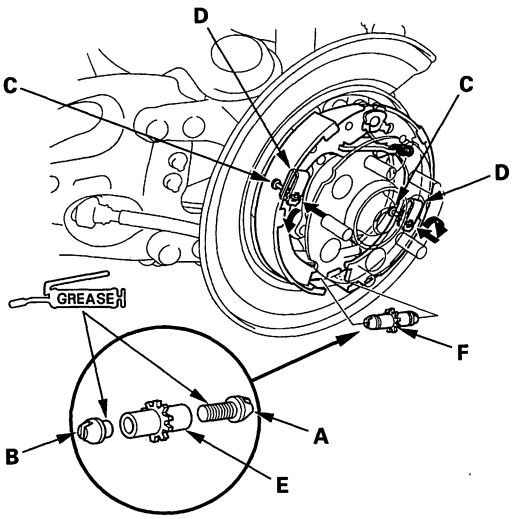


7. Install connecting rods A and B on the adjuster nut (E).

NOTE:
- Clean the threaded portions of connecting rod A and the sliding surface of connecting rod B, then coat them with rubber grease.
- Shorten connecting rod A by fully turning the adjuster nut.

8. Position the brake shoe adjuster assembly (F) on the parking brake shoes.

(cont'd)

Protected by AR



## Parking Brake Shoe Replacement (cont'd)

9. Install the lower return spring (A).

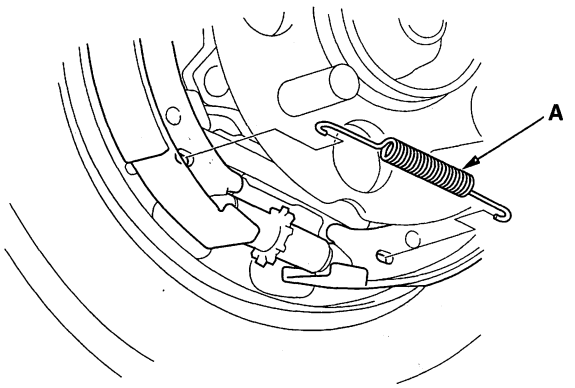


10. Install the upper return spring (B) and the brake spring A.

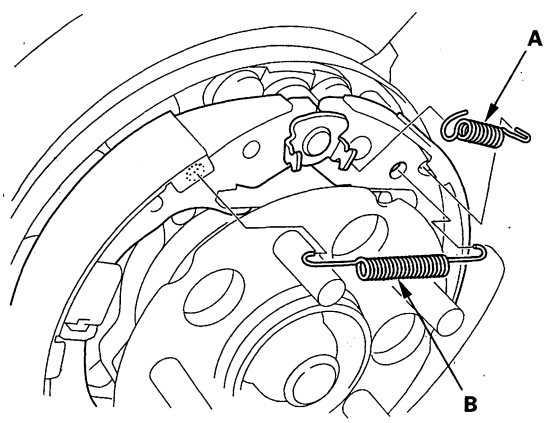


11. Install the rear brake disc/drum and rear brake caliper (see page 18-32).

12. Do the major parking brake adjustment (see page 19-8).

## Parking Brake Shoe Lining Break-in

**⚠ WARNING**

Do this operation in a safe area.

NOTE:
- Do brake lining surface break-in when replacing shoes with new brake linings and/or new rear brake disc/drum.
- Check the number of parking brake lever clicks. Adjust the parking brake before lining surface break-in (see page 19-8).

1. Park the vehicle on a firm, level surface.
2. Release the parking brake pedal.
3. Press the parking brake pedal 4 clicks.
4. Drive the vehicle for 1/4 mile (400 m) at about 31 mph (50 km/h).
5. Stop the vehicle, and release the parking brake for 5—10 minutes to allow the brake disc/drum to cool.
6. Repeat steps 3 through 5 again.
7. Check the parking brake pedal adjustment (see page 19-7).



BACK

Protected by AR

## Brake Pedal Replacement

1. Remove the driver's dashboard undercover (see page 20-102).

2. Disconnect the brake pedal position switch connector (A).

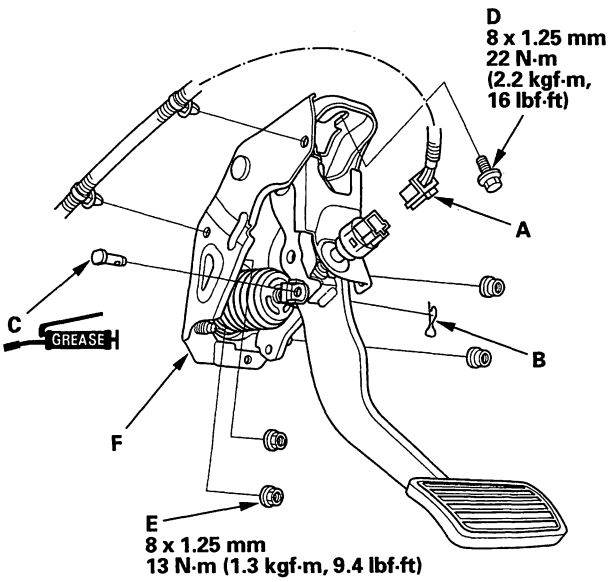


3. Remove the lock pin (B) and joint pin (C).

   NOTE: Use a new lock pin whenever installing.

4. Remove the brake pedal bracket mounting bolt (D) and nuts (E).

5. Remove the brake pedal with bracket (F).

6. Install in the reverse order of removal.

7. Do the brake pedal and brake pedal position switch adjustment (see page 19-6).

Protected by AR

# Conventional Brake Components

## Brake Hose and Line Inspection

1. Inspect the brake hoses for damage, deterioration, leaks, interference, and twisting.
2. Check the brake lines for damage, rusting, and leaks. Also check for bent brake lines.
3. Check for leaks at hose and line joints and connections, and retighten if necessary.
4. Check the master cylinder and the VSA modulator-control unit for damage and leaks.

| Connection Point | Component | Connected to | Specified Torque Value | Note |
|---|---|---|---|---|
| A | Front brake caliper | Brake hose | 34 N·m (3.5 kgf·m, 25 lbf·ft) | Banjo bolt |
| | | Bleed screw | 9 N·m (0.9 kgf·m, 7 lbf·ft) | |
| B | Rear brake caliper | Brake hose | 34 N·m (3.5 kgf·m, 25 lbf·ft) | Banjo bolt |
| | | Bleed screw | 9 N·m (0.9 kgf·m, 7 lbf·ft) | |
| C | Brake hose | Brake line | 15 N·m (1.5 kgf·m, 11 lbf·ft) | Flare nut |
| D | Master cylinder | Brake line | 22 N·m (2.2 kgf·m, 16 lbf·ft) | Flare nut |
| E | VSA modulator-control unit | Brake line (12 mm nut) | 22 N·m (2.2 kgf·m, 16 lbf·ft) | Flare nut |
| | | Brake line (10 mm nut) | 15 N·m (1.5 kgf·m, 11 lbf·ft) | Flare nut |

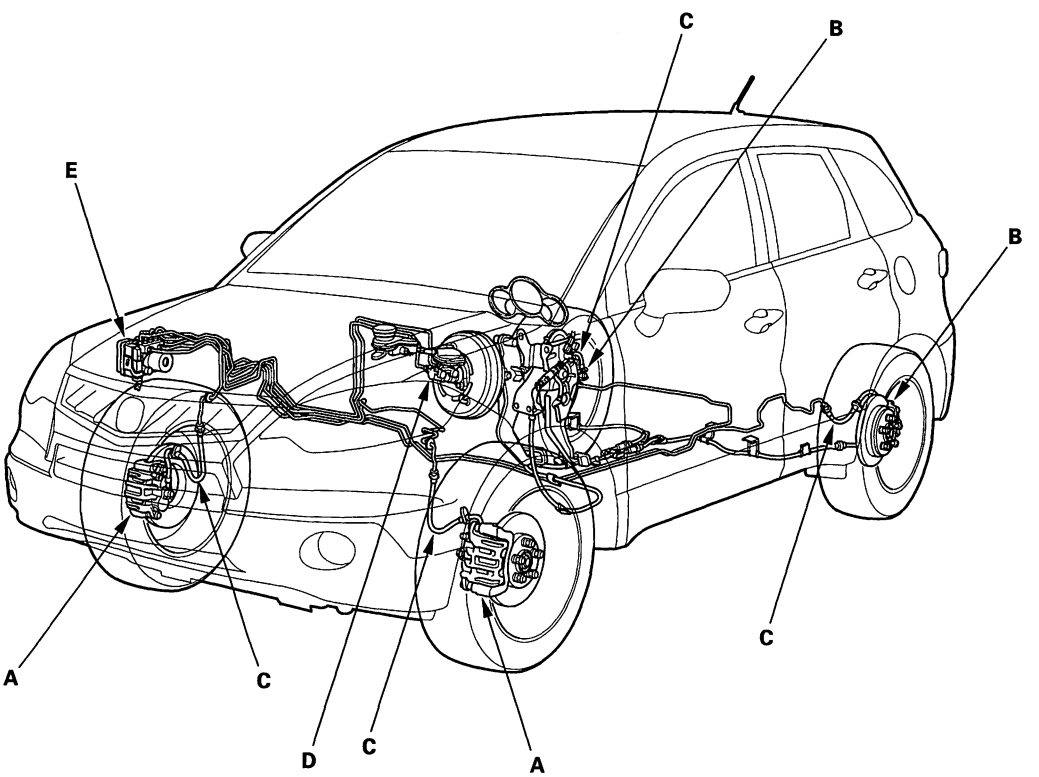




BACK

Protected by AR

# Brake Hose Replacement

NOTE:
- Before reassembling, check that all parts are free of dirt and other foreign particles.
- Replace parts with new ones whenever specified to do so.
- Do not spill brake fluid on the vehicle; it may damage the paint; if brake fluid gets on the paint, wash it off immediately with water.
- To prevent the brake fluid from flowing, plug and cover the hose ends and joints with a shop towel or equivalent material.

## Removal-Front

1. Disconnect the brake line (A) from the brake hose (B), then remove the brake hose clip (C).

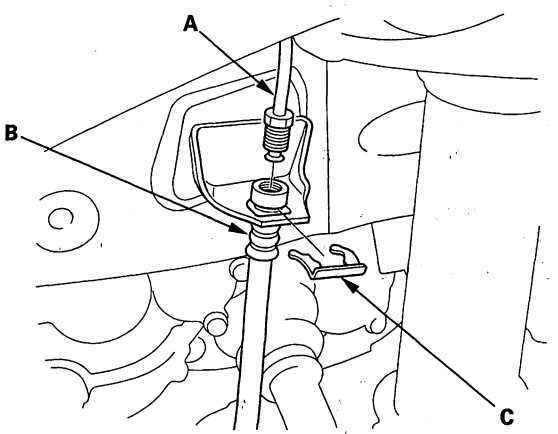


2. Remove the banjo bolt (A), and disconnect the brake hose (B) from the caliper.

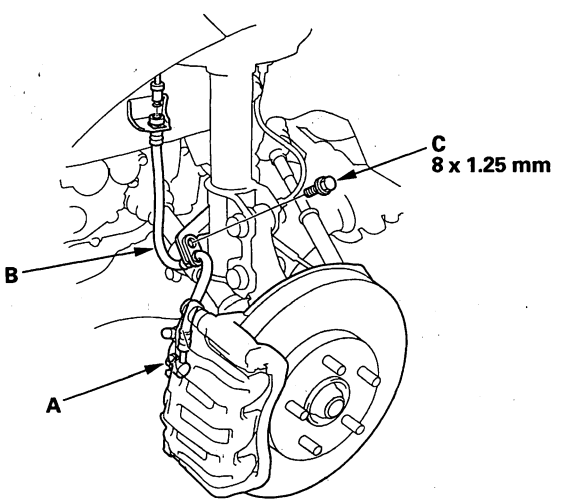


3. Remove the brake hose mounting bolt (C), then remove the brake hose.

## Installation-Front

1. Install the brake hose (A) with the mounting bolt (B).

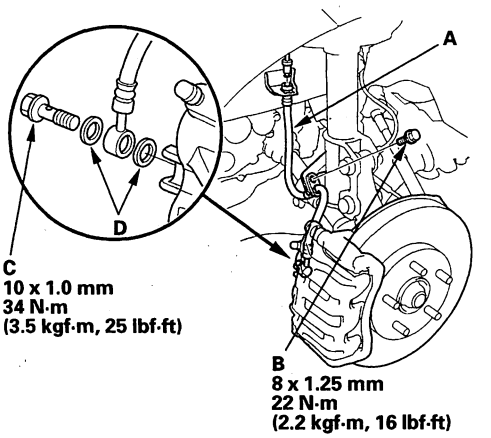


2. Connect the brake hose to the caliper with the banjo bolt (C) and new sealing washers (D).

3. Install a new brake hose clip (A) to the brake hose (B) on the bracket, then connect the brake line (C). Do not twist the brake hose.

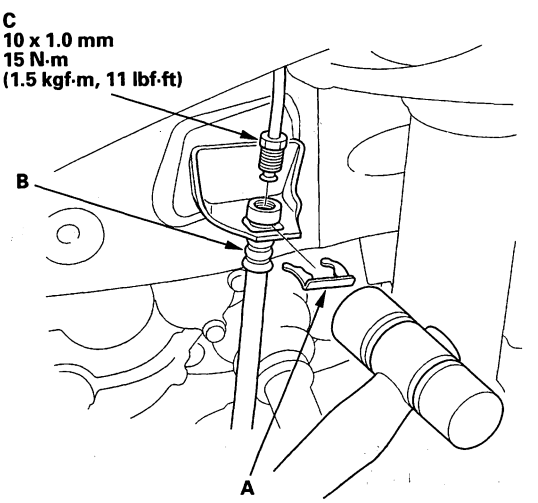


4. After installing the brake hose, bleed the brake system (see page 19-9).

5. Do the following checks:

   - Check the brake hose and line joint for leaks, and tighten if necessary.
   - Check the brake hoses for interference and twisting.

(cont'd)

Protected by AR



## Brake Hose Replacement (cont'd)

### Removal-Rear

1. Disconnect the brake line (A) from the brake hose (B), then remove the brake hose clip (C).

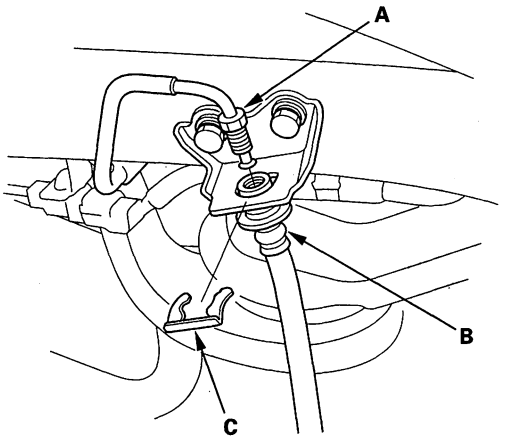


2. Remove the banjo bolt (A), and disconnect the brake hose (B) from the caliper.

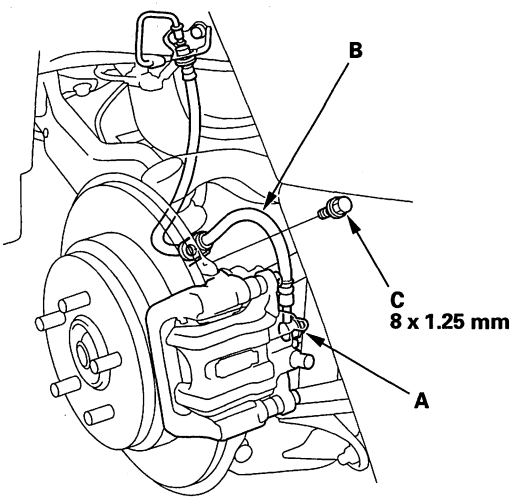


3. Remove the brake hose mounting bolt (C), then remove the brake hose.

### Installation-Rear

1. Install the brake hose (A) with the mounting bolt (B).

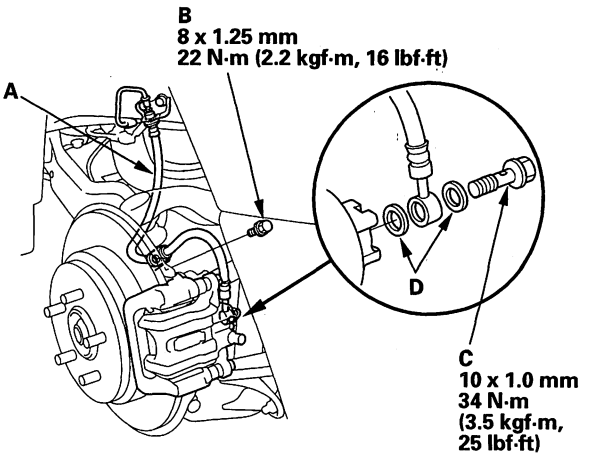


2. Connect the brake hose to the caliper with the banjo bolt (C) and new sealing washers (D).

3. Install a new brake hose clip (A) to the brake hose (B) on the bracket, then connect the brake line (C). Do not twist the brake hose.

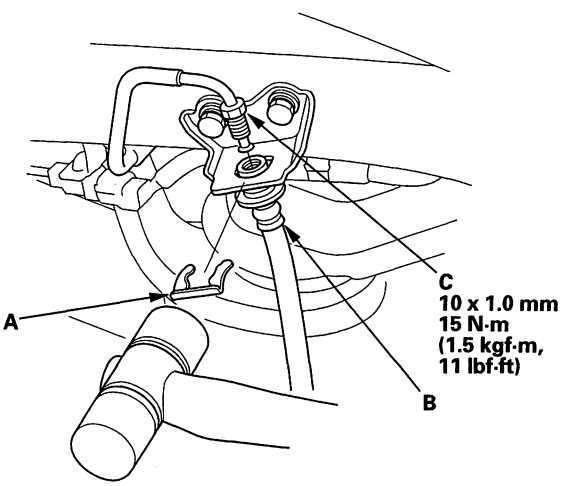


4. After installing the brake hose, bleed the brake system (see page 19-9).

5. Do the following checks:

   - Check the brake hose and line joint for leaks, and tighten if necessary.
   - Check the brake hoses for interference and twisting.



BACK

Protected by AR

# Parking Brake Cable Replacement

## Exploded View

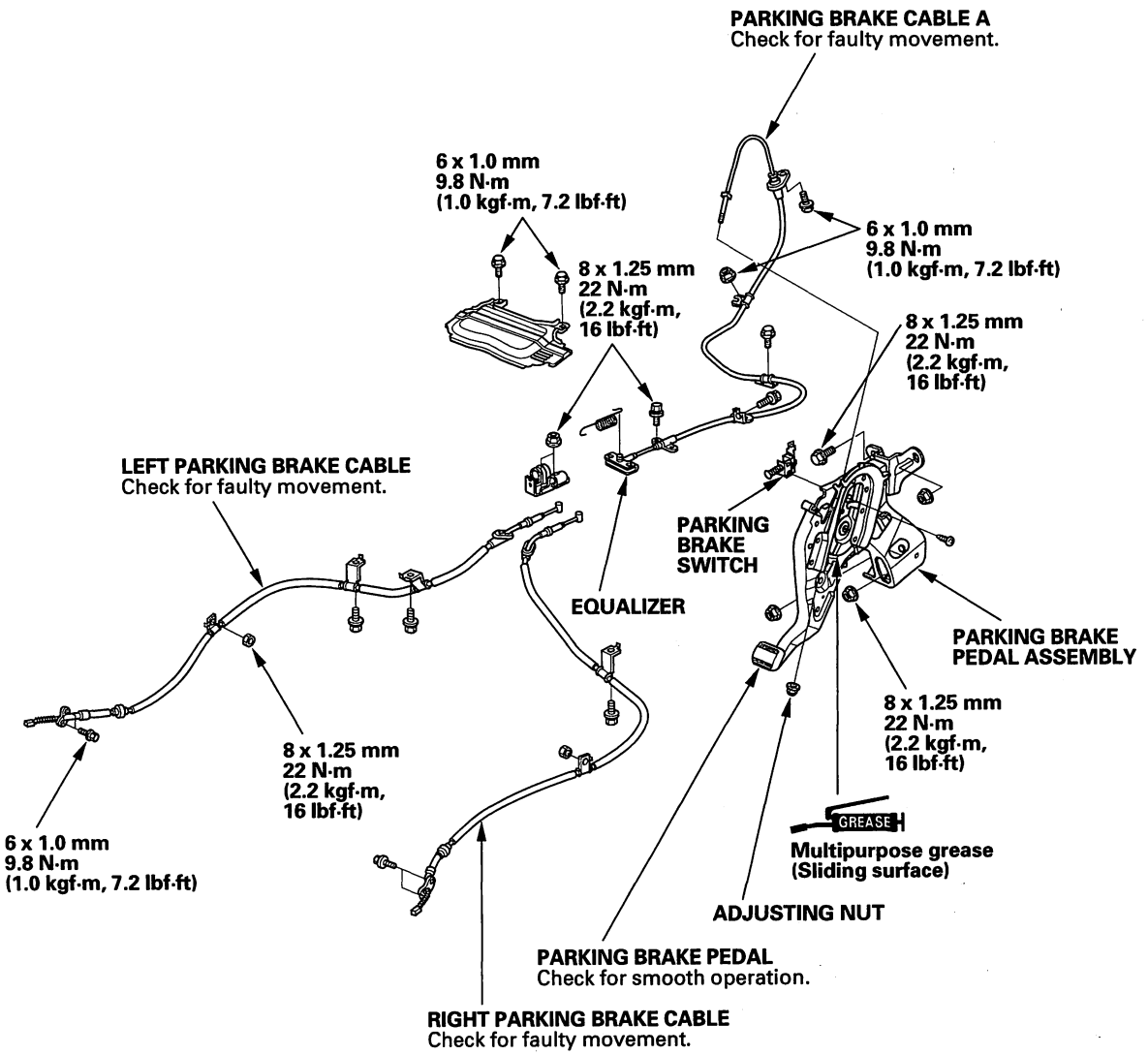


(cont'd)

Protected by AR



## Parking Brake Cable Replacement (cont'd)

NOTE:
- The parking brake cable must not be bent or distorted. This will lead to stiff operation and premature cable failure.
- Refer to the Exploded View as needed during this procedure.

1. Loosen the parking brake cable adjusting nut (see page 19-8).

2. Remove the parking brake shoes, and disconnect the parking brake cable from the parking brake lever (see page 19-31).

3. Remove the parking brake cable mounting bolts from the backing plate (A).

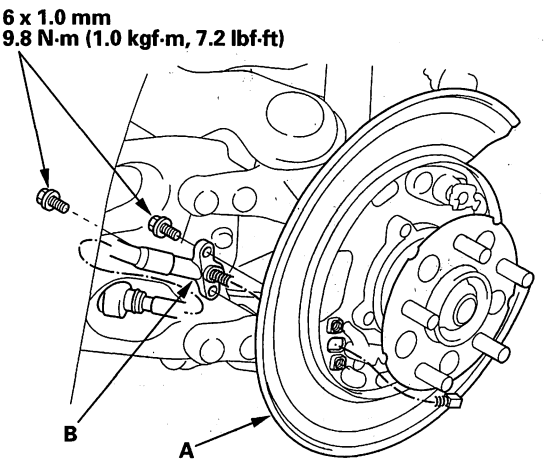


4. Pull the parking brake cable (B) and remove it from the backing plate.

5. Reinstall the parking brake cable in the reverse order of removal, and note these items:

   - Be careful not to bend or distort the cable.
   - Connect the parking brake cable to the brake lever, and install the brake shoes and disc/drum (see page 19-31).
   - Do the parking brake adjustment (see page 19-7). Apply the parking brake firmly 10 times then adjust it again.



BACK

Protected by AR

# Brakes

**Conventional Brake Components ..... 19-1**

**Electric Vacuum Pump System**
Component Location Index ..... 19-42
General Troubleshooting Information ..... 19-43
DTC Troubleshooting Index ..... 19-47
Symptom Troubleshooting Index ..... 19-48
System Description ..... 19-49
Circuit Diagram ..... 19-54
DTC Troubleshooting ..... 19-57
Brake Booster Pressure Sensor Replacement ..... 19-78
Electric Vacuum Pump Replacement ..... 19-79

**VSA (Vehicle Stability Assist) System Components ..... 19-81**

BACK

Protected by AR

# Electric Vacuum Pump System

## Component Location Index

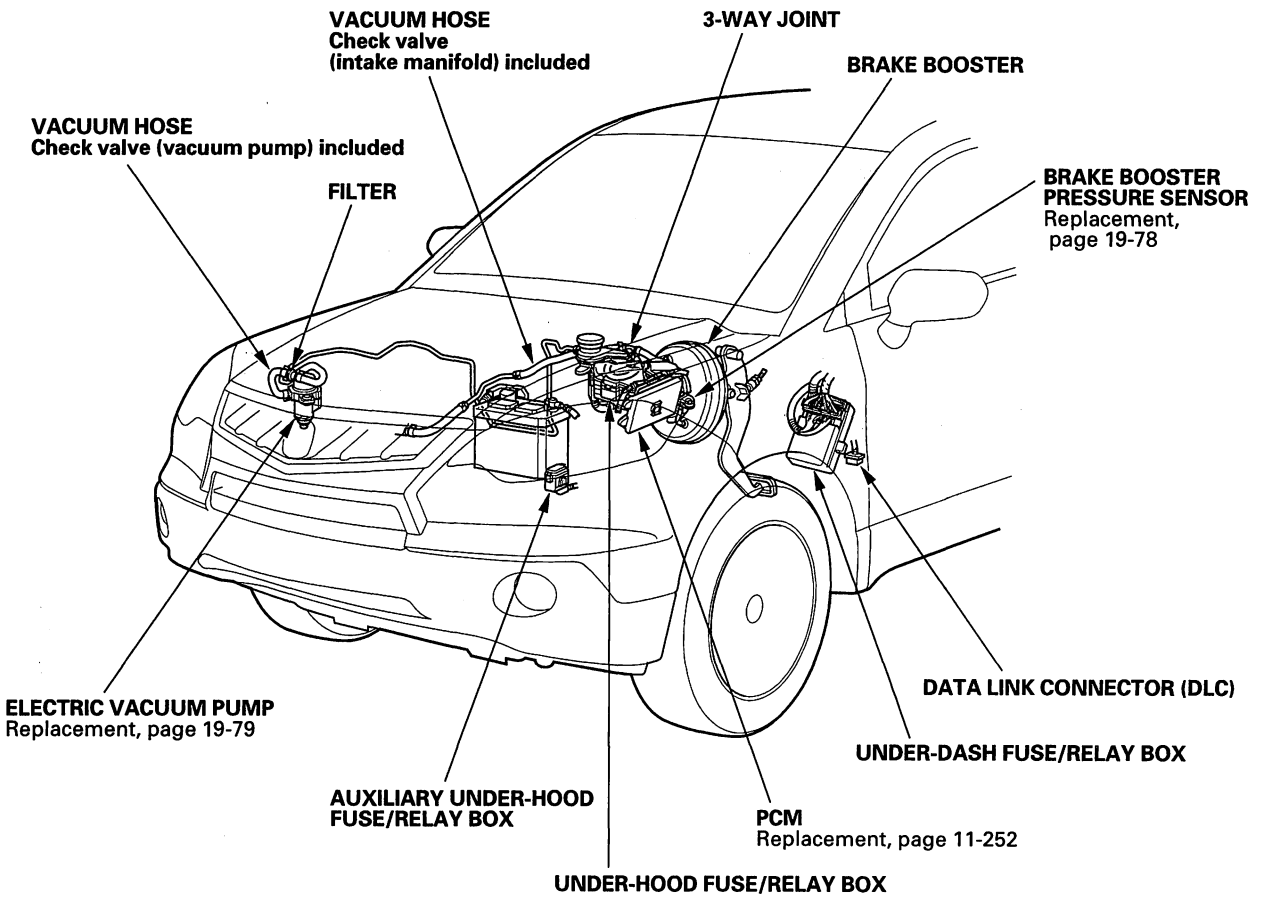




BACK

Protected by AR

# General Troubleshooting Information

## System Indicator

This system has an electric vacuum pump system indicator (A).

- When the system detects a problem, the electric vacuum pump system indicator stays on.
- When the system is normal, the electric vacuum pump system indicator comes on after turning the ignition switch ON (II), then it goes off under these conditions:
  - Before starting the engine.
  - After starting the engine.
  - Pressing the brake pedal for the first time after starting the engine.

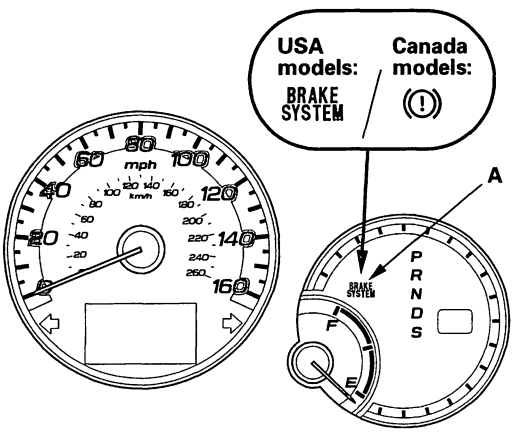


## Diagnostic Trouble Code (DTC)

- The memory can hold any number of DTCs. However, when the same DTC is detected more than once, the more recent DTC is written over the earlier one. Therefore, when the same problem is detected repeatedly, it is memorized as a single DTC.
- The DTCs are indicated in the order they occur.
- The DTCs are memorized in the PCM.
- The electric vacuum pump system DTCs are shown independently, and are treated as additional internal data by the PCM. Therefore, the electrical vacuum pump system DTCs are canceled by disconnecting the battery.

## Self-diagnosis

- Self-diagnosis can be classified into two categories:
  - Initial diagnosis: Done when the ignition switch is turned ON (II), and until the electric vacuum pump system indicator goes off.
  - Regular diagnosis: Done right after the initial diagnosis, until the ignition switch is turned OFF.
- When the system detects a problem, the system shifts to a fail-safe mode.

(cont'd)

Protected by AR



## General Troubleshooting Information (cont'd)

### Pump Motor

The electric vacuum pump operates as needed. You can hear the motor function at times, this is normal.
The pump motor operates under these conditions:

- The system detects if the brake booster vacuum becomes low while the engine is running.
- After cold starting the engine, or the outside temperature is very cool.
- At high altitude.

The pump motor turns off when the system detects the brake booster vacuum is sufficient enough. If the system detects a fault, the system shifts to fail-safe mode, and turns on the electric vacuum pump system indicator.

### Relationship of the Fuel and Emissions Systems

The electric vacuum pump system is a part of the brake systems. Operation relies on information from sensors in the Fuel and Emission systems. Review general troubleshooting in Fuel and Emissions systems (see page 11-3).



BACK

Protected by AR

## How to Troubleshoot DTCs

The troubleshooting procedures assume that the cause of the problem is still present and the electric vacuum pump system indicator is still on. Following the procedure when the electric vacuum pump system indicator does not come on can result in incorrect diagnosis.
When a client has driven the vehicle abnormally, these DTCs are might been stored:

- DTC P15BC: Drive the vehicle and apply/release the brake pedal repeatedly for 1 minute or more.
- DTC P0571:
  - Both the brake pedal and the accelerator pedal are pressed at the same time for 5 minutes, and vehicle speed is 12 mph (20km/h) or more.
  - Stop the vehicle speed from 24 mph (40 km/h) without pressing brake pedal (using only parking brake etc.) continuously 3 times or more.

1. Ask the customer about the conditions when the problem occurred and the electric vacuum pump system indicator came on, such as during braking, acceleration when vehicle was travelling at a certain speed, etc.

2. When the electric vacuum pump system indicator does not come on during the test-drive, but troubleshooting is done based on the DTC, check for loose connectors, poor contact of the terminals, etc.

3. After troubleshooting or repairs are done, clear the DTCs, and test-drive the vehicle under the same conditions as when the DTC was originally set. Make sure the electric vacuum pump system indicator does not come on.

4. Check for DTCs in other systems that are connected via the F-CAN. If there are DTCs that are related to the F-CAN, the most likely cause was that the ignition switch was turned ON (II) while the PCM connectors were disconnected.

## Intermittent Failures

The term "intermittent failure" means a system may have had a failure, but it checks OK now. If the electric vacuum pump system indicator on the dash does not come on, check for poor connections or loose terminals at all connectors related to the circuit that you are troubleshooting. If the indicators were on but then went out, the original problem may have been intermittent.

(cont'd)

Protected by AR



## General Troubleshooting Information (cont'd)

### How to Use the HDS (Honda Diagnostic System)

1. If the electric vacuum pump system indicator stays on, connect the HDS to the data link connector (DLC) (A) located under the driver's side of the dashboard.

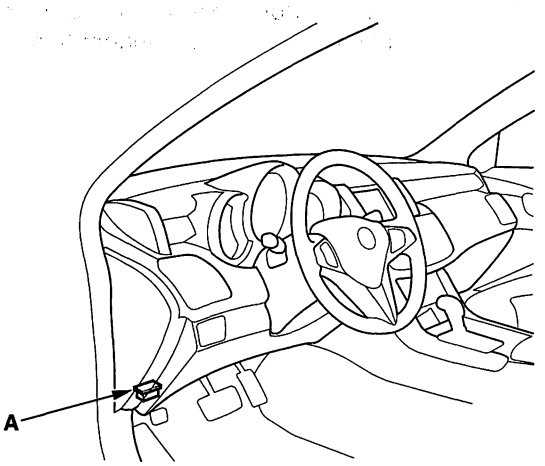


2. Turn the ignition switch ON (II).
3. Make sure the HDS communicates with the PCM. If it doesn't, troubleshoot the DLC circuit (see page 11-229).
4. Check the diagnostic trouble code (DTC) and note it. Also check the on-board snapshot data, and download any data found. Then refer to the indicated DTC's troubleshooting, and begin the appropriate troubleshooting procedure.

   NOTE:
   - The HDS can read the DTC, freeze data, snapshot, current data, and other system data.
   - For specific operations, refer to the Help menu that came with the HDS.

### How to Retrieve DTCs

1. With the ignition switch OFF, connect the HDS to the data link connector (DLC) under the driver's side of the dashboard.
2. Turn the ignition switch ON (II).
3. Make sure the HDS communicates with the PCM. If it doesn't, troubleshoot the DLC circuit (see page 11-229).
4. Follow the prompts on the HDS to display the DTC(s) on the screen. After determining the DTC, refer to the DTC troubleshooting.
5. Turn the ignition switch OFF.

### How to Clear DTCs

NOTE: Check for fuel and emissions systems DTCs and write down the codes indicated.

1. With the ignition switch OFF, connect the HDS to the data link connector (DLC) under the driver's side of the dashboard.
2. Turn the ignition switch ON (II).
3. Make sure the HDS communicates with the PCM. If it doesn't, troubleshoot the DLC circuit (see page 11-229).
4. Clear the DTC(s) by following the screen prompts on the HDS.
5. Turn the ignition switch OFF.



BACK

Protected by AR

## DTC Troubleshooting Index

| DTC | Detection Item | Electric Vacuum Pump System Indicator | Note |
|---|---|---|---|
| P0555 | Brake Booster Pressure Sensor Circuit Malfunction | ON | (see page 19-57) |
| P0556 | Brake Booster Pressure Sensor Circuit Range/Performance Problem | ON | (see page 19-60) |
| P0571 | Brake Pedal Position Switch Circuit | ON | (see page 19-63) |
| P1131 | Electric Vacuum Pump System Related PGM-FI Sensor Signal Malfunction | ON | (see page 19-64) |
| P15B9 | Check Valve (Intake Manifold) Leak Detected | ON | (see page 19-64) |
| P15BA | Check Valve (Intake Manifold) Stuck Closed | ON | (see page 19-65) |
| P15BB | Brake Booster System Leak Detected | ON | (see page 19-66) |
| P15BC | Electric Vacuum Pump Operating Time Exceeded | ON | (see page 19-67) |
| P16D9 | Powertrain Control Module (PCM) Internal Circuit Malfunction | ON | (see page 19-64) |
| P16DA | Electric Vacuum Pump Relay 1 Stuck OFF | ON | (see page 19-71) |
| P16DB | Electric Vacuum Pump Relay 1/2 Signal Circuit Malfunction | ON | (see page 19-74) |
| P16DC | Electric Vacuum Pump Relay 2 Stuck ON | ON | (see page 19-76) |
| P16DD | Electric Vacuum Pump Relay 1 Stuck ON | ON | (see page 19-77) |

NOTE: If the electric vacuum pump system indicator and MIL come on at the same time, select the PGM-FI system with the HDS, and check the fuel and emissions system DTCs first (see page 11-3).

Protected by AR

# Electric Vacuum Pump System

## Symptom Troubleshooting Index

When the vehicle has one of these symptoms, check for a diagnostic trouble code (DTC) with the HDS. If there is no DTC, do the diagnostic procedure for the symptom, in the sequence listed, until you find the cause.

| Symptom | Diagnostic procedure |
|---|---|
| HDS does not communicate with the PCM or the vehicle | Troubleshoot the DLC circuit (see page 11-229). |
| Electric vacuum pump system indicator does not come on | 1. Do the gauge control module troubleshooting (see page 22-258).<br>2. Update the PCM (see page 11-7) or substitute a known-good PCM (see page 11-8), then recheck. If it is OK and substituted, replace the original PCM (see page 11-252). |
| Electric vacuum pump system indicator does not go off, and no DTCs are stored | 1. Press the brake pedal several times.<br>2. Start the engine.<br>3. Check the F-CAN lines between the PCM and the gauge control module, and troubleshoot the gauge control module DTC (see page 22-3).<br>4. Check for fuel and emission systems DTCs with the HDS, and troubleshoot the system (see page 11-3).<br>5. Update the PCM (see page 11-7) or substitute a known-good PCM (see page 11-8), then recheck. If the system is OK with the substituted PCM, replace the original PCM (see page 11-252). |
| Brake assist is reduced, and no DTCs are stored | Check the conventional brake system. |



BACK

Protected by AR

## System Description

### PCM (Electric Vacuum Pump System) Inputs and Outputs at Connector A (□) (44P)

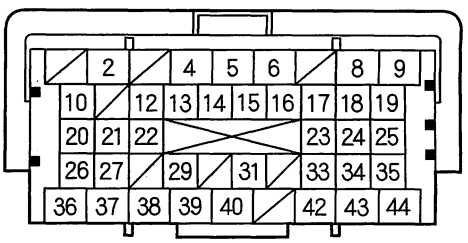


Terminal side of female terminals

| Terminal number | Wire color | Terminal name | Description | Signal |
|---|---|---|---|---|
| 6 | GRN | MRLY (PGM-FI MAIN RELAY 1) (C) | Drives PGM-FI main relay 1 (C)<br>Power source for DTC memory | With ignition switch ON (II): about 0 V<br>With ignition switch OFF: battery voltage |
| 8 | ORN | IGP (POWER SOURCE) | Power source for PCM circuit | With ignition switch ON (II): battery voltage |
| 9 | BLK | SG6 (SENSOR GROUND) | Sensor ground | Less than 1.0 V at all times |
| 12 | WHT | VPMPRLY (VACUUM PUMP RELAY) | Drives vacuum pump relay | With electric vacuum pump OFF: about 0 V<br>With electric vacuum pump ON: about 14.0 V |
| 13 | PNK | VPMPRLYD | Detects vacuum pump signal load | At idle with electric vacuum pump OFF: about 2.3 V<br>At idle with electric vacuum pump ON: about 14.0 V |
| 17 | YEL | APSA (ACCELERATOR PEDAL POSITION (APP) SENSOR A) | Detects APP sensor A signal | With ignition switch ON (II) and accelerator pedal pressed: about 4.7 V<br>With ignition switch ON (II) and accelerator pedal released: about 1.0 V |
| 18 | PUR | APSB (ACCELERATOR PEDAL POSITION (APP) SENSOR B) | Detects APP sensor B signal | With ignition switch ON (II) and accelerator pedal pressed: about 2.3 V<br>With ignition switch ON (II) and accelerator pedal released: about 0.5 V |
| 19 | RED | VCC6 (SENSOR VOLTAGE) | Provides sensor reference voltage | With ignition switch ON (II): about 5.0 V |
| 24 | GRY | VCC5 (SENSOR VOLTAGE) | Provides sensor reference voltage | With ignition switch ON (II): about 5.0 V |
| 25 | BRN | VCC4 (SENSOR VOLTAGE) | Provides sensor reference voltage | With ignition switch ON (II): about 5.0 V |
| 34 | LT BLU | SG5 (SENSOR GROUND) | Sensor ground | Less than 1.0 V at all times |
| 35 | BLU | SG4 (SENSOR GROUND) | Sensor ground | Less than 1.0 V at all times |
| 36 | WHT | CAN H (CAN COMMUNICATION SIGNAL HIGH) | Sends communication signal | With ignition switch ON (II): about 2.5 V (pulses) |
| 37 | RED | CAN L (CAN COMMUNICATION SIGNAL LOW) | Sends communication signal | With ignition switch ON (II): about 2.5 V (pulses) |
| 40 | LT GRN | BKSW (BRAKE PEDAL POSITION SWITCH) | Detects brake pedal position switch signal | With brake pedal released: about 0 V<br>With brake pedal pressed: battery voltage |

(cont'd)

Protected by AR

# Electric Vacuum Pump System

## System Description (cont'd)

### PCM (Electric Vacuum Pump System) Inputs and Outputs at Connector B (△) (44P)

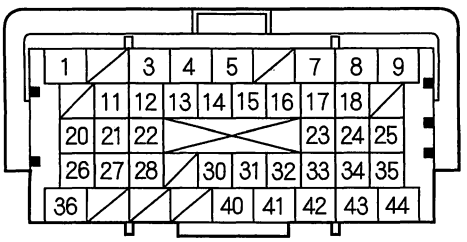


Terminal side of female terminals

| Terminal number | Wire color | Terminal name | Description | Signal |
|---|---|---|---|---|
| 1 | BLK | PG2 (POWER GROUND) | Ground circuit for PCM circuit | Less than 1.0 V at all times |
| 5 | GRN/BLK | PBMPA (BRAKE BOOSTER PRESSURE) | Detects brake booster pressure sensor signal | With ignition switch ON (II) and brake pedal released: about 2.0 V |
| 36 | BLK | PG1 (POWER GROUND) | Ground circuit for PCM circuit | Less than 1.0 V at all times |

### PCM (Electric Vacuum Pump System) Inputs and Outputs for Connector C (○) (44P)

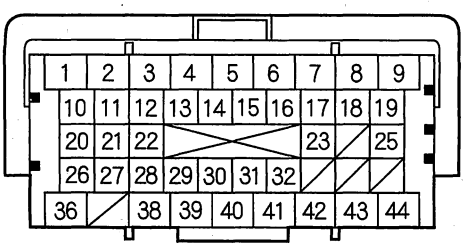


Terminal side of female terminals

| Terminal number | Wire color | Terminal name | Description | Signal |
|---|---|---|---|---|
| 11 | GRN/RED | MAP (MANIFOLD ABSOLUTE PRESSURE (MAP) SENSOR) | Detects MAP sensor signal | With ignition switch ON (II): about 2.0 V<br>At idle: about 1.0 V (depending on engine speed) |
| 13 | YEL/RED | VCC1 (SENSOR VOLTAGE) | Provides sensor voltage | With ignition switch ON (II): about 5.0 V |
| 14 | GRN/WHT | SG1 (SENSOR GROUND) | Sensor ground | Less than 1.0 V at all times |
| 36 | BLK/YEL | IG1 (IGNITION SIGNAL) | Detects ignition signal | With ignition switch ON (II): battery voltage |



BACK

Protected by AR

## System Necessity

- Starting cold engine: The fuel and emissions systems will retard timing to help heat up the catalytic converter and turbocharger with high exhaust temperature. In this case, the vacuum pressure in the intake manifold is reduced.
- When the turbocharger system supercharges the intake air , the intake manifold vacuum pressure will be reduced.

To compensate for vacuum loss, the electric pump is required, especially in high altitude areas where low atmospheric density conditions create long warm up condition.

## System Control

The electric vacuum pump controls the target vacuum of the brake booster compared to atmosphere pressure.

**Target Vacuum Pressure of the Brake Booster**

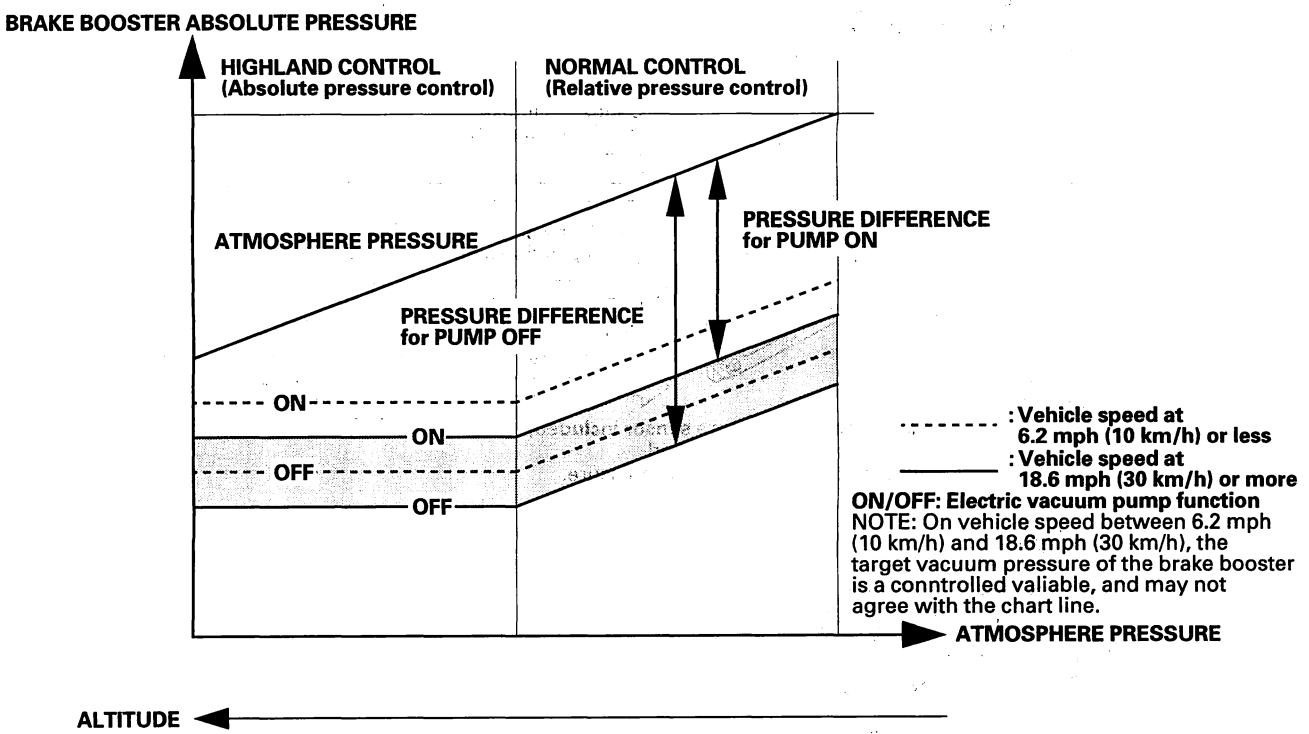


(cont'd)

Protected by AR

# Electric Vacuum Pump System

## System Description (cont'd)

### System Electrical Structure

The system has a brake booster pressure sensor, a electric vacuum pump, a electric vacuum pump system indicator in the gauge control module, and the PCM with fuel and emissions systems sensors.

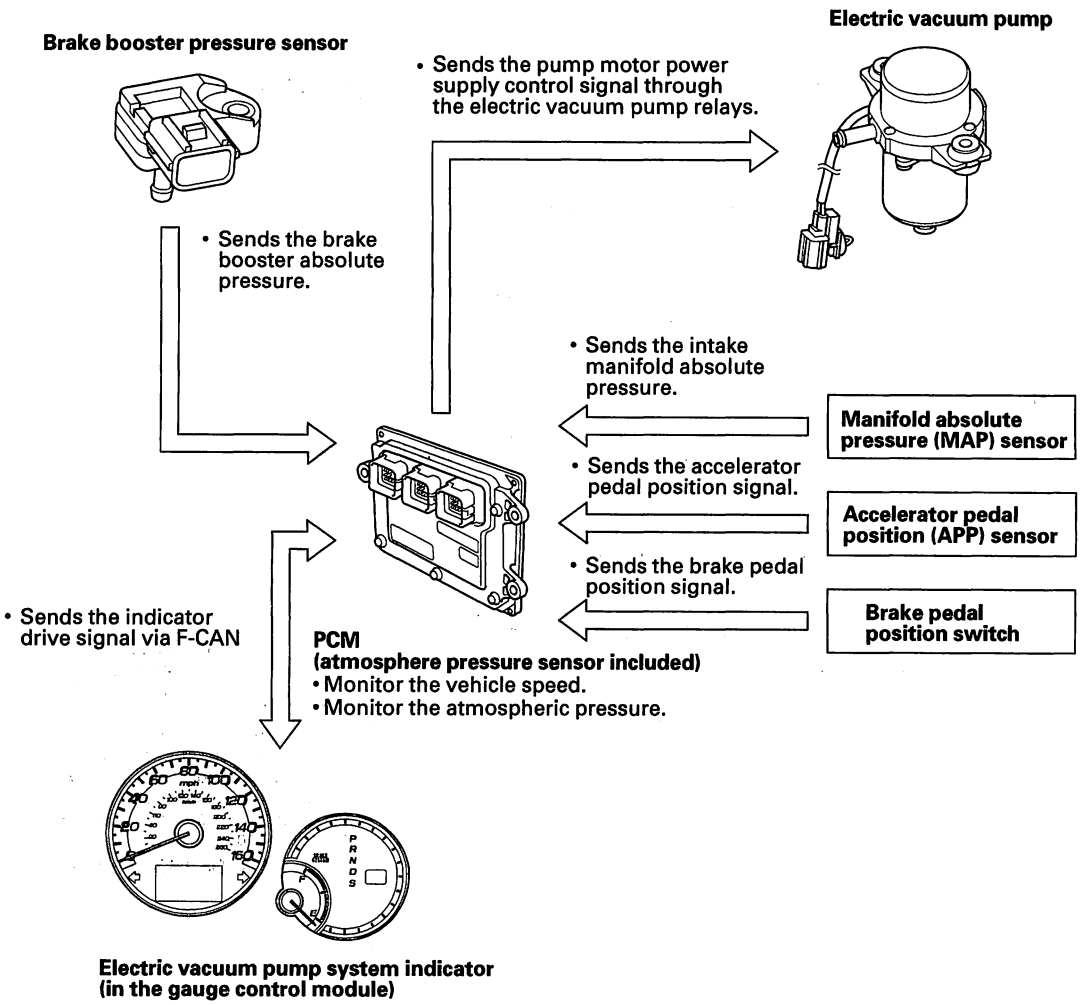




BACK

Protected by AR

## System Air Flow

The brake system includes: A brake booster pressure sensor, a electric vacuum pump with a filter, a check valve (vacuum pump), and a 3-way joint on the conventional brake system booster vacuum hoses.

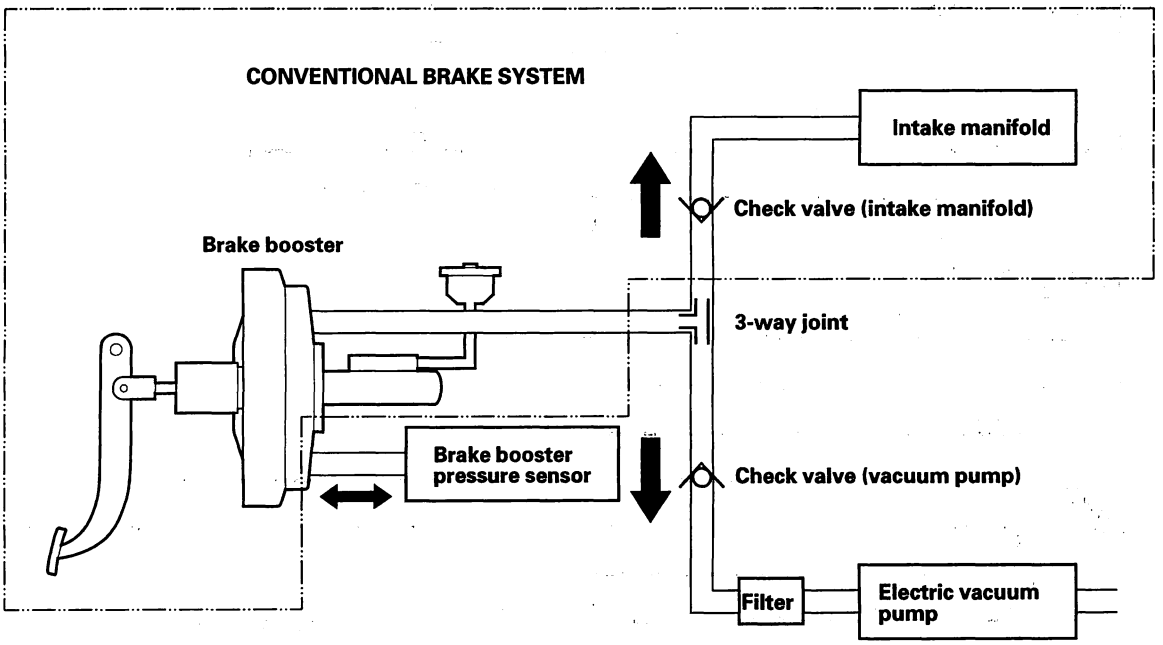


## Electric Vacuum Pump

The electric vacuum pump has a motor and a rotor with five sliding vanes. The motor rotates the rotor, and generates the vacuum.
The motor function is controlled by the PCM.

## Brake Booster Pressure Sensor

The brake booster pressure sensor converts brake booster absolute pressure into electrical signals to the PCM.

Protected by AR

# Electric Vacuum Pump System

## Circuit Diagram

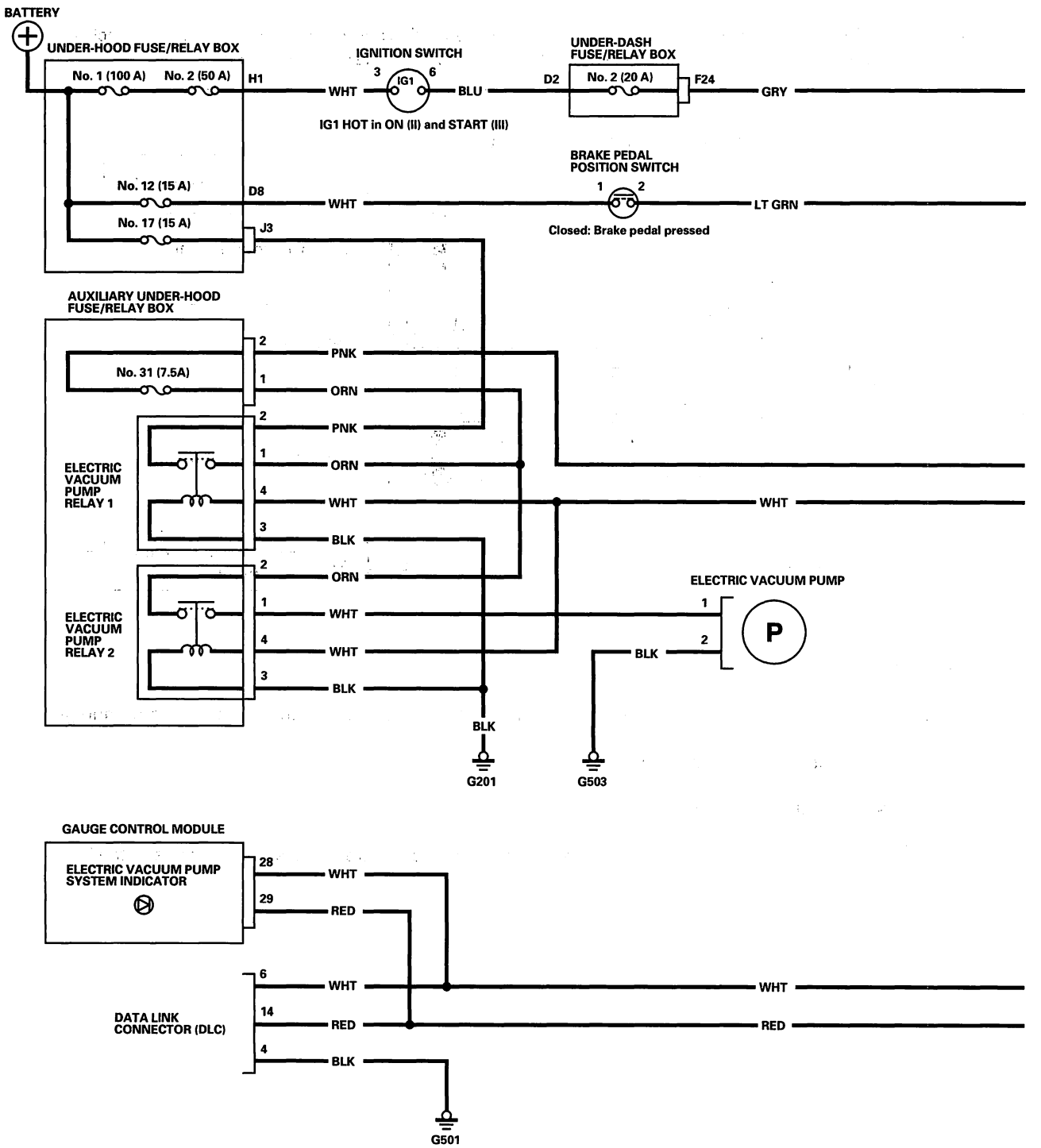




BACK

Protected by AR

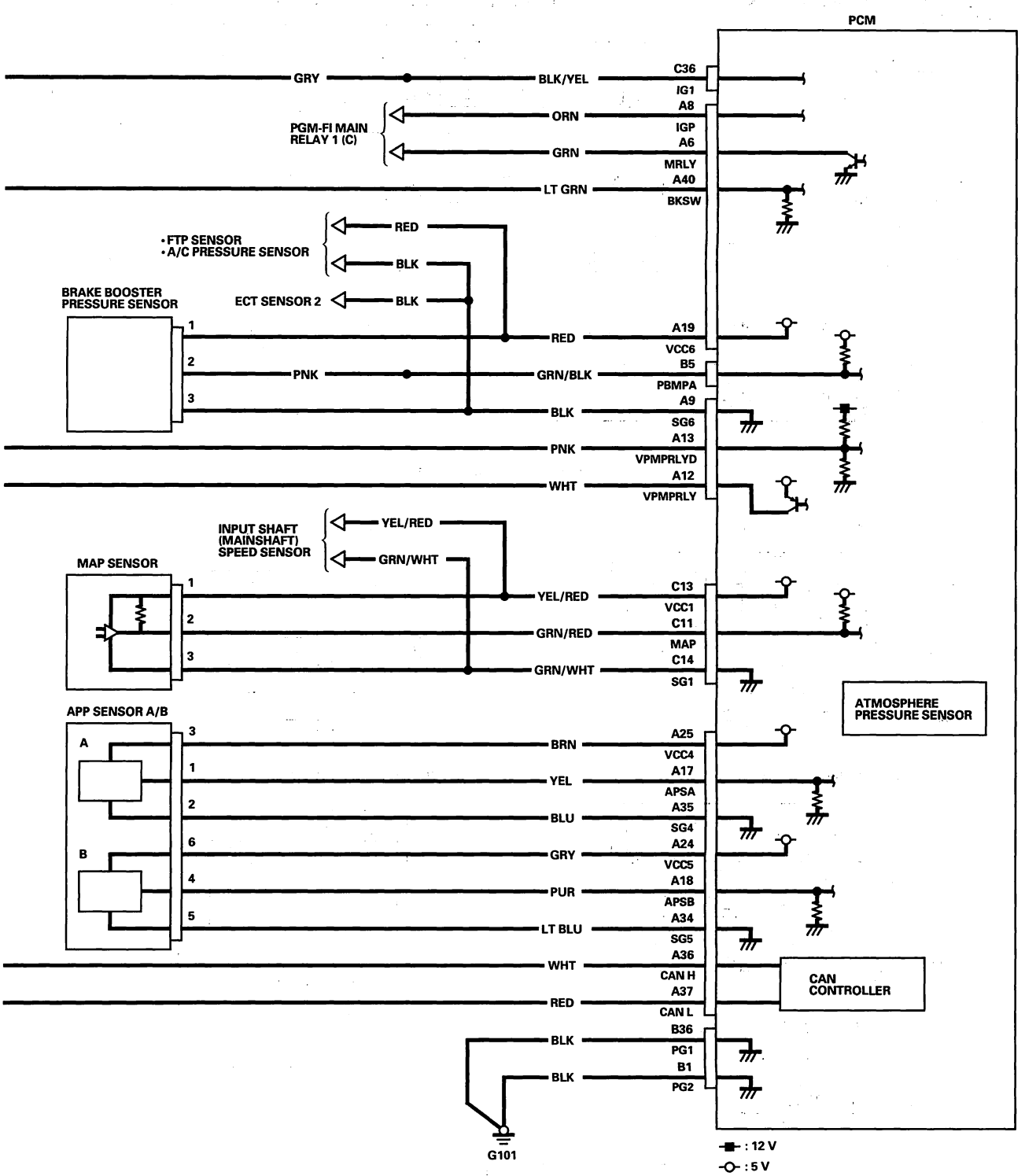


(cont'd)

BACK

Protected by AR

# Electric Vacuum Pump System

## Circuit Diagram (cont'd)

**UNDER-HOOD FUSE/RELAY BOX CONNECTOR J (4P)**

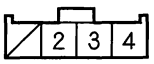


**UNDER-DASH FUSE/RELAY BOX CONNECTOR F (34P)**

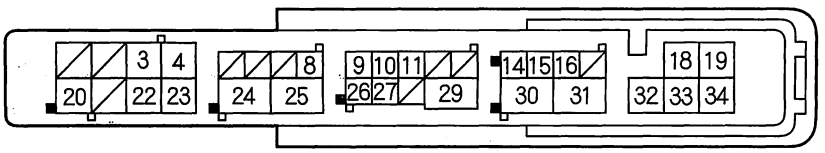


**BRAKE PEDAL POSITION SWITCH 4P CONNECTOR**

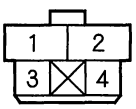


**APP SENSOR A/B 6P CONNECTOR**

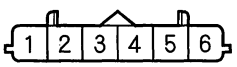


**BRAKE BOOSTER PRESSURE SENSOR 3P CONNECTOR**

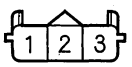


**MAP SENSOR 3P CONNECTOR**

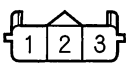


**GAUGE CONTROL MODULE 36P CONNECTOR**

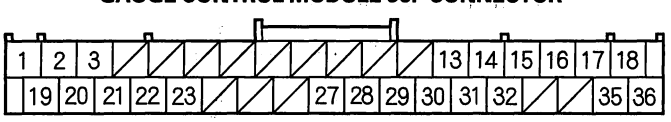


**ELECTRIC VACUUM PUMP 2P CONNECTOR**

Wire side of female terminals

**PCM CONNECTOR A (□) (44P)**

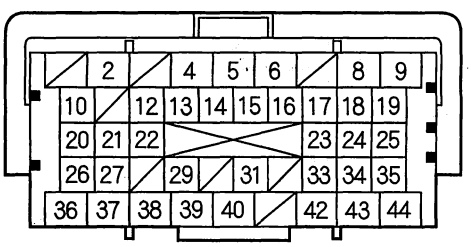


**PCM CONNECTOR B (△) (44P)**

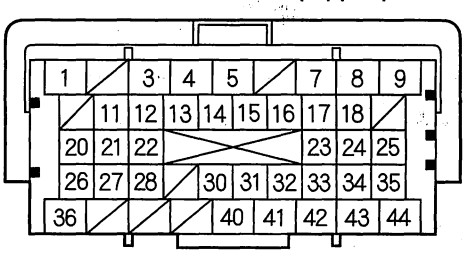


**PCM CONNECTOR C (○) (44P)**

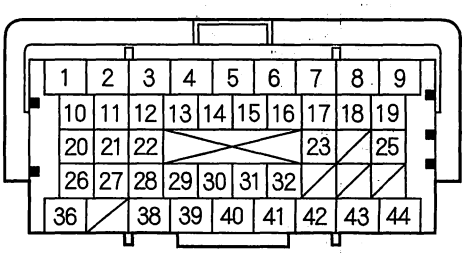


**AUXILIARY UNDER-HOOD FUSE/RELAY BOX**

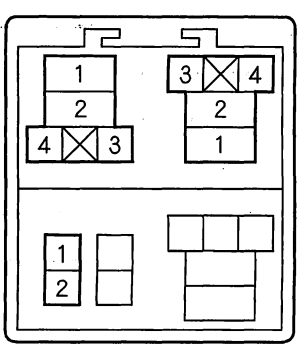


**DATA LINK CONNECTOR (DLC)**

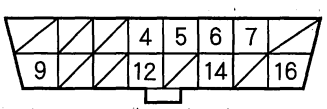


Terminal side of female terminals



BACK

Protected by AR

## DTC Troubleshooting

### DTC P0555: Brake Booster Pressure Sensor Circuit Malfunction

1. Turn the ignition switch ON (II).

2. Check the BRAKE BOOSTER PRESSURE SENSOR in the DATA LIST with the HDS.

   *Is it between 0.19 and 4.8 V?*

   **YES**—Intermittent failure, the system is OK at this time. Check for loose terminals between the brake booster pressure sensor 3P connector, and PCM connector A (44P)/B (44P). Refer to intermittent failures troubleshooting (see page 19-45).■

   **NO**—If 0.19 V or less is indicated, go to step 3. If 4.8 V or more is indicated, go to step 13.

3. Turn the ignition switch OFF.

4. Disconnect the brake booster pressure sensor 3P connector.

5. Turn the ignition switch ON (II).

6. Check the BRAKE BOOSTER PRESSURE SENSOR in the DATA LIST with the HDS.

   *Is 0.19 V or less indicated?*

   **YES**—Go to step 7.

   **NO**—Go to step 11.

7. Turn the ignition switch OFF.

8. Short the SCS line with the HDS.

9. Disconnect PCM connector B (44P).

10. Check for continuity between body ground and brake booster pressure sensor 3P connector terminal No. 2.

**BRAKE BOOSTER PRESSURE SENSOR 3P CONNECTOR**

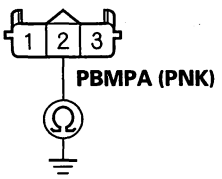


Wire side of female terminals

*Is there continuity?*

**YES**—Repair short to body ground in the wire between the brake booster pressure sensor and the PCM.■

**NO**—Check for loose terminals in the brake booster pressure sensor 3P connector, and PCM connector A (44P)/B (44P), then update the PCM if it does not have the latest software, or substitute a known-good PCM, then go to step 1 and recheck. If no DTCs are indicated, and the PCM was substituted, replace the original PCM (see page 11-252).■

(cont'd)

Protected by AR



## DTC Troubleshooting (cont'd)

11. Measure the voltage between brake booster pressure sensor 3P connector terminals No. 1 and No. 3.

**BRAKE BOOSTER PRESSURE SENSOR 3P CONNECTOR**

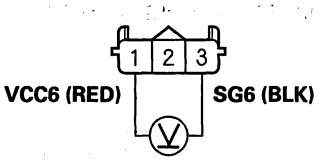


Wire side of female terminals

*Is there about 5 V?*

**YES**—Replace the brake booster pressure sensor (see page 19-78).■

**NO**—Go to step 12.

12. Measure the voltage between body ground and brake booster pressure sensor 3P connector terminal No. 1.

**BRAKE BOOSTER PRESSURE SENSOR 3P CONNECTOR**

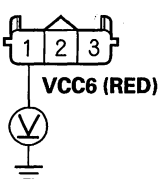


Wire side of female terminals

*Is there 0.1 V or less?*

**YES**—Repair open in the wire between the brake booster pressure sensor and the PCM.■

**NO**—Check for loose terminals in the brake booster pressure sensor 3P connector, and PCM connector A (44P)/B (44P), then update the PCM if it does not have the latest software, or substitute a known-good PCM, then go to step 1 and recheck. If no DTCs are indicated, and the PCM was substituted, replace the original PCM (see page 11-252).■

13. Turn the ignition switch OFF.

14. Disconnect the brake booster pressure sensor 3P connector.

15. Connect brake booster pressure sensor 3P connector terminals No. 2 and No. 3 with a jumper wire.

**BRAKE BOOSTER PRESSURE SENSOR 3P CONNECTOR**

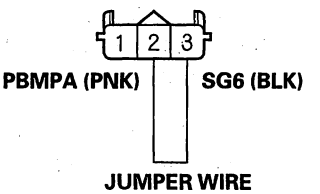


Wire side of female terminals

16. Turn the ignition switch ON (II).

17. Check the BRAKE BOOSTER PRESSURE SENSOR in the DATA LIST with the HDS.

*Is 4.8 V or more indicated?*

**YES**—Go to step 18.

**NO**—Replace the brake booster pressure sensor (see page 19-78).■

18. Disconnect the jumper wire from the brake booster pressure sensor.



BACK

Protected by AR

19. Measure the voltage between body ground and brake booster pressure sensor 3P connector terminal No. 2.

**BRAKE BOOSTER PRESSURE SENSOR 3P CONNECTOR**

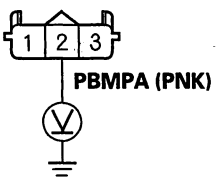


Wire side of female terminals

*Is there about 5 V?*

**YES**—Repair open in the wire (SG6 line) between the brake booster pressure sensor and the PCM. ■

**NO**—Go to step 20.

20. Turn the ignition switch OFF.

21. Short the SCS line with the HDS.

22. Disconnect PCM connector B (44P).

23. Check for continuity between brake booster pressure sensor 3P connector terminal No. 2 and PCM connector B (44P) terminal No. 5.

**BRAKE BOOSTER PRESSURE SENSOR 3P CONNECTOR**
Wire side of female terminals

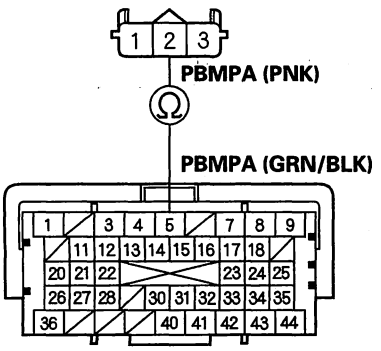


**PCM CONNECTOR B (44P)**
Terminal side of female terminals

*Is there continuity?*

**YES**—Check for loose terminals in the brake booster pressure sensor 3P connector, and PCM connector A (44P)/B (44P), then update the PCM if it does not have the latest software, or substitute a known-good PCM, then go to step 1 and recheck. If no DTCs are indicated, and the PCM was substituted, replace the original PCM (see page 11-252). ■

**NO**—Repair open in the wire between the brake booster pressure sensor and the PCM. ■

Protected by AR



## DTC Troubleshooting (cont'd)

### DTC P0556: Brake Booster Pressure Sensor Circuit Range/Performance Problem

**Special Tools Required**
Vacuum pump/gauge, 0—30 in. Hg, Snap-on YA4000A or equivalent, commercially available

NOTE: If DTC P0556 is stored at the same time as DTC P0571, troubleshoot DTC P0571 first, then recheck for DTC P0556.

1. Turn the ignition switch OFF.

2. Disconnect the vacuum hose (A) for the brake booster pressure sensor (B) from the brake booster, and connect a vacuum pump/gauge, 0—30 in.Hg, to the brake booster pressure sensor hose.

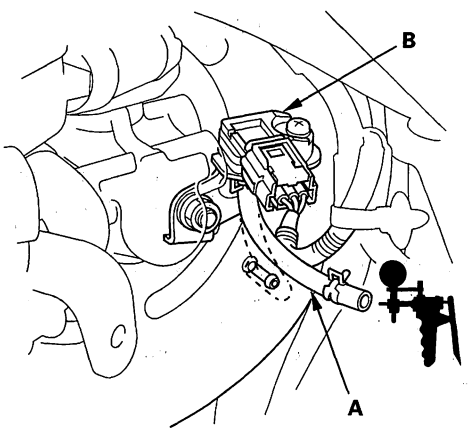


3. Turn the ignition switch ON (II).

4. Check the BRAKE BOOSTER PRESSURE SENSOR in the DATA LIST with the HDS before and after applying vacuum to the hose using the vacuum pump/gauge.

   *Does the indicated value change?*

   **YES**—Go to step 5.

   **NO**—Replace the brake booster pressure sensor (see page 19-78). ■

5. Turn the ignition switch OFF.

6. Check for vacuum leaks or clogging up at these parts:

   - Brake booster pressure sensor hose.
   - Brake booster vacuum hoses and their joints.
   - Check valve (intake manifold).
   - Check valve (vacuum pump) and filter.
   - Brake booster.

   *Are the parts OK?*

   **YES**—Go to step 7.

   **NO**—Repair or replace the leaking or clogged up part(s). ■

7. Check the brake pedal position switch signal circuit (see page 11-336).

   *Is the circuit OK?*

   **YES**—Go to step 8.

   **NO**—Troubleshoot the brake pedal position switch signal circuit. ■

8. Reconnect the vacuum hose on the brake booster pressure sensor to the brake booster.

9. Turn the ignition switch ON (II).

10. Note the BRAKE BOOSTER PRESSURE in the DATA LIST with the HDS.

11. Turn the ignition switch OFF.

12. Make sure you have anti-theft codes for the audio and the navigation system (if equipped) then write down the audio presets. Disconnect the negative cable from the battery, and wait several seconds.

13. Reconnect the negative cable to the battery, then do this procedure after the troubleshooting:

    - Enter the anti-theft code for the audio and the navigation system (if equipped), then enter the audio presets.
    - Set the clock.



BACK

Protected by AR

14. Check the BRAKE BOOSTER PRESSURE SENSOR in the DATA LIST with the HDS when the electric vacuum pump runs while you turn the ignition switch ON (II). Do not start the engine.

    *Does the indicated value change when the motor runs?*

    **YES**—Intermittent failure, the system is OK at this time. Check for loose terminals between the electric vacuum pump relay 2 4P connector, the electric vacuum pump 2P connector, the brake pedal position switch 4P connector, and PCM connector A (44P). Refer to intermittent failures troubleshooting (see page 19-45).■

    **NO**—If the pump does not run, go to step 15. If the pump runs, turn the ignition switch OFF, then repeat steps 12 to 14 again. If you still get the same brake booster pressure sensor value, replace the electric vacuum pump (see page 19-79).■

15. Turn the ignition switch OFF.

16. Check the connection and terminal fits of the electric vacuum pump 2P connector.

    *Is the connector properly connected?*

    **YES**—Go to step 17.

    **NO**—Connect the electric vacuum pump 2P connector properly. If necessary, repair or replace the connector.■

17. Remove electric vacuum pump relay 2, and check it (see page 22-64).

    *Is the relay OK?*

    **YES**—Go to step 18.

    **NO**—Replace electric vacuum pump relay 2.■

18. Remove the No. 17 (15 A) fuse from the under-hood fuse/relay box.

19. Remove the No. 31 (7.5 A) fuse from the auxiliary under-hood fuse/relay box.

20. Check for continuity between electric vacuum pump relay 2 terminal No. 2 and No. 31 (7.5 A) fuse in the auxiliary under-hood fuse/relay box terminal No. 1.

**AUXILIARY UNDER-HOOD FUSE/RELAY BOX**

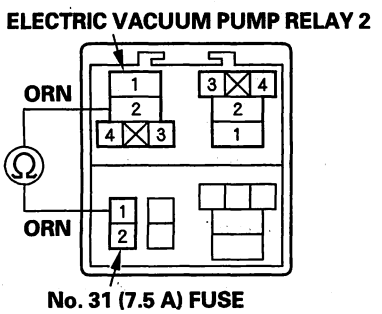


Terminal side of female terminals

    *Is there continuity?*

    **YES**—Go to step 21.

    **NO**—Repair open in the wire between electric vacuum pump relay 2 and the No. 31 (7.5 A) fuse in the auxiliary under-hood fuse/relay box.■

21. Remove electric vacuum pump relay 1.

22. Install the No. 17 (15 A) fuse in the under-hood fuse/relay box.

(cont'd)

Protected by AR



## DTC Troubleshooting (cont'd)

23. Connect electric vacuum pump relay 2 connector terminals No. 1 and No. 2, and electric vacuum pump relay 1 connector terminals No. 1 and No. 2 with a jumper wire.

AUXILIARY UNDER-HOOD FUSE/RELAY BOX

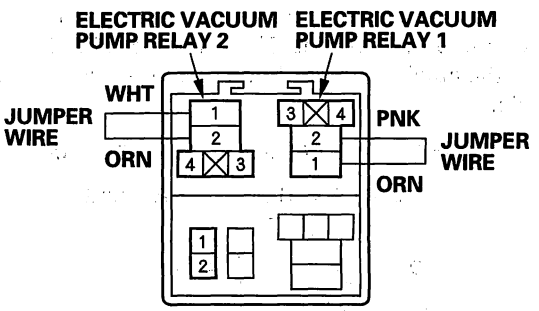


Terminal side of female terminals

*Does electric vacuum pump motor run?*

**YES**—Check for loose terminals in the electric vacuum pump relay 2 4P connector, the electric vacuum pump 2P connector, the brake pedal position switch 4P connector, and PCM connector A (44P), then update the PCM if it does not have the latest software, or substitute a known-good PCM, then go to step 1 and recheck. If no DTCs are indicated, and the PCM was substituted, replace the original PCM (see page 11-252).■

**NO**—Go to step 24.

24. Disconnect the electric vacuum pump 2P connector.

25. Measure the voltage between body ground and electric vacuum pump 2P connector terminal No. 1.

ELECTRIC VACUUM PUMP 2P CONNECTOR

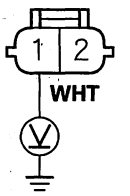


Wire side of female terminals

*Is there battery voltage?*

**YES**—Go to step 26.

**NO**—Repair open in the wire between the electric vacuum pump relay 2 and the electric vacuum pump.■

26. Check for continuity between body ground and electric vacuum pump 2P connector terminal No. 2.

ELECTRIC VACUUM PUMP 2P CONNECTOR

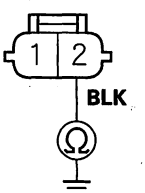


Wire side of female terminals

*Is there continuity?*

**YES**—Replace the electric vacuum pump (see page 19-79).■

**NO**—Repair open in the wire between the electric vacuum pump and body ground (G503).■



BACK

Protected by AR

## DTC P0571: Brake Pedal Position Switch Circuit

NOTE: DTC P0571 may be stored when both the brake pedal and the accelerator pedal are pressed at the same time for 5 minutes, and vehicle speed is 12 mph (20 km/h) or more.

1. Turn the ignition switch OFF.

2. Check brake pedal position switch adjustment (see page 19-6).

   *Is the switch adjustment OK?*

   **YES**—Go to step 3.

   **NO**—Adjust the brake pedal position switch (see page 19-6).■

3. Turn the ignition switch ON (II).

4. Check the BRAKE PEDAL POSITION SWITCH in the DATA LIST with the HDS when the brake pedal is not pressed.

   *Is OFF indicated?*

   **YES**—Go to step 5.

   **NO**—Go to step 9.

5. Check the BRAKE PEDAL POSITION SWITCH in the DATA LIST with the HDS when the brake pedal is pressed.

   *Is ON indicated?*

   **YES**—Intermittent failure, the system is OK at this time. Check for loose terminals between the brake pedal position switch 4P connector, and PCM connector A (44P). Refer to intermittent failures troubleshooting (see page 19-45).■

   **NO**—Go to step 6.

6. Turn the ignition switch OFF.

7. Disconnect the brake pedal position switch 4P connector.

8. Check the brake pedal position switch (see page 22-180).

   *Is the switch OK?*

   **YES**—Repair open in the wire between the brake pedal position switch and the PCM.■

   **NO**—Replace the brake pedal position switch (see page 19-6).■

9. Turn the ignition switch OFF.

10. Disconnect the brake pedal position switch 4P connector.

11. Check the brake pedal position switch (see page 22-180).

    *Is the switch OK?*

    **YES**—Repair short in the wire between the brake pedal position switch and the PCM.■

    **NO**—Replace the brake pedal position switch (see page 19-6).■

Protected by AR



## DTC Troubleshooting (cont'd)

**DTC P1131:** Electric Vacuum Pump System Related PGM-FI Sensor Signal Malfunction

**DTC P16D9:** PCM Internal Circuit Malfunction

NOTE: This DTC is stored when there is a problem in the fuel and emission systems. Check for fuel and emission systems DTCs with the HDS, and go to the indicated DTC's troubleshooting (see page 11-3).

**DTC P15B9:** Check Valve (Intake Manifold) Leak Detected

1. Turn the ignition switch OFF.
2. Check for vacuum leaks at the check valve (intake manifold) between the brake booster and the intake manifold (see page 19-20).

   *Is the check valve OK?*

   **YES**—Go to step 3.

   **NO**—Replace the brake booster vacuum hose. (The check valve is inside the hose).■
3. Disconnect the vacuum hose from the brake booster.
4. Turn the ignition switch ON (II).
5. Check the BRAKE BOOSTER PRESSURE SENSOR, and BARO SENSOR in the DATA LIST with the HDS, then compare the two pressure values.

   *Is the BRAKE BOOSTER PRESSURE SENSOR 8.67 kPa (2.56 in.Hg, 65 mmHg), more than the BARO SENSOR?*

   **YES**—Replace the brake booster pressure sensor (see page 19-78).■

   **NO**—Intermittent failure, the system is OK at this time.■



BACK

Protected by AR

## **DTC P15BA:** Check Valve (Intake Manifold) Stuck Closed

**Special Tools Required**
Vacuum pump/gauge, 0—30 in.Hg, Snap-on YA4000A or equivalent, commercially available

NOTE: If DTC P15BA is stored at the same time as DTC P0571, troubleshoot DTC P0571 first, then recheck for DTC P15BA.

1. Turn the ignition switch OFF.

2. Disconnect the vacuum hose (A) for the brake booster pressure sensor (B) from the brake booster, and connect a vacuum pump/gauge, 0—30 in.Hg, to the brake booster pressure sensor hose.

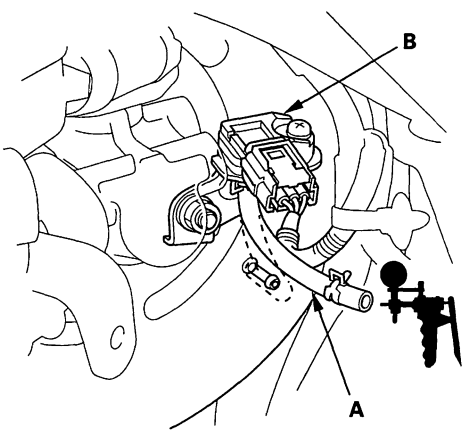


3. Turn the ignition switch ON (II).

4. Check the BRAKE BOOSTER PRESSURE SENSOR in the DATA LIST with the HDS before and after applying vacuum to the hose using the vacuum pump/gauge.

   *Does the indicated value change?*

   **YES**—Go to step 5.

   **NO**—Replace the brake booster pressure sensor (see page 19-78). ■

5. Turn the ignition switch OFF.

6. Check for vacuum leaks or clogging up at these parts:

   - Brake booster pressure sensor hose.
   - Brake booster vacuum hoses and their joints.
   - Check valve (intake manifold).
   - Check valve (vacuum pump) and filter.
   - Brake booster.

   *Are the parts OK?*

   **YES**—Go to step 7.

   **NO**—Repair or replace the leaking or clogged up part(s).

7. Check the brake pedal position switch signal circuit (see page 11-336).

   *Is the circuit OK?*

   **YES**—Intermittent failure, the system is OK at this time. Check for loose terminals between the brake pedal position switch 4P connector, and PCM connector A (44P). Refer to intermittent failures troubleshooting (see page 19-45). ■

   **NO**—Troubleshoot the brake pedal position switch signal circuit. ■

Protected by AR



## DTC Troubleshooting (cont'd)

### DTC P15BB: Brake Booster System Leak Detected

NOTE: If DTC P15BB is stored at the same time as DTC P0571, troubleshoot DTC P0571 first, then recheck for DTC P15BB.

1. Turn the ignition switch OFF.

2. Check for vacuum leaks or clogging at these parts:

   - Brake booster pressure sensor hose.
   - Brake booster vacuum hoses and their joints.
   - Check valve (intake manifold).
   - Check valve (vacuum pump) and filter.
   - Brake booster.

   *Are the parts OK?*

   **YES**—Go to step 3.

   **NO**—Repair or replace the leaking or clogging up part(s).

3. Check the brake pedal position switch signal circuit (see page 11-336).

   *Is the circuit OK?*

   **YES**—Intermittent failure, the system is OK at this time. Check for loose terminals between the brake pedal position switch 4P connector, and PCM connector A (44P). Refer to intermittent failures troubleshooting (see page 19-45). ■

   **NO**—Troubleshoot the brake pedal position switch signal circuit. ■



BACK

Protected by AR

## **DTC P15BC:** Electric Vacuum Pump Operating Time Exceeded

1. Turn the ignition switch OFF.

2. Make sure you have anti-theft codes for the audio and the navigation system (if equipped), then write down the audio presets. Disconnect the negative cable from the battery, and wait several seconds.

3. Reconnect the negative cable to the battery, then do this procedure after the troubleshooting:

   - Enter the anti-theft code for the audio and the navigation system (if equipped), then enter the audio presets.
   - Set the clock.

4. Turn the ignition switch ON (II). Do not start the engine.

   *Does electric vacuum pump motor run?*

   **YES**—Go to step 5.

   **NO**—Go to step 21.

5. Turn the ignition switch OFF.

6. Disconnect the vacuum hose (A) for the brake booster pressure sensor (B) from the brake booster, and connect a vacuum pump/gauge, 0—30 in. Hg, to the brake booster pressure sensor hose.

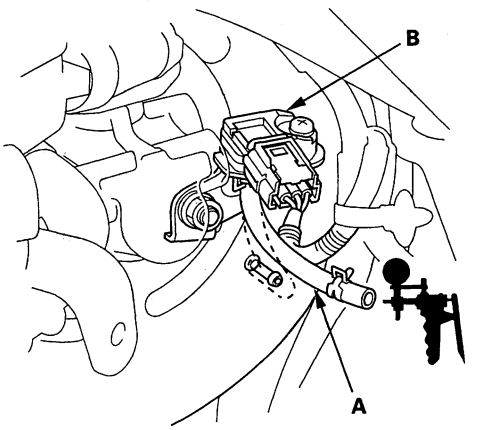


7. Turn the ignition switch ON (II).

8. Check the BRAKE BOOSTER PRESSURE SENSOR in the DATA LIST with the HDS before and after applying vacuum to the hose using the vacuum pump/gauge.

   *Does the indicated value change?*

   **YES**—Go to step 9.

   **NO**—Replace the brake booster pressure sensor (see page 19-78). ■

9. Turn the ignition switch OFF.

10. Reconnect the vacuum hose to the brake booster.

11. Disconnect the brake booster vacuum hose from the intake manifold (see step 6 on page 9-3).

    NOTE: Cap the brake booster vacuum hose connector on the intake manifold to prevent a vacuum leak, or dust entering the system.

12. Deplete the booster vacuum by pressing the brake pedal several times until the brake pedal becomes hard.

13. Turn the ignition switch ON (II).

(cont'd)

Protected by AR



## DTC Troubleshooting (cont'd)

14. Check the ELECTRIC VACUUM PUMP RELAY in the DATA LIST with the HDS, and start the engine while pressing the brake pedal lightly.

    NOTE: Do not press the brake pedal hard, press the pedal gently until the brake lights turn on.

    *Does the pump run and shut off within 8 seconds?*

    **YES**—Intermittent failure, the system is OK at this time. Check for loose terminals between the brake booster pressure sensor 3P connector, the electric vacuum pump relay 2 4P connector, the electric vacuum pump 2P connector, and PCM connector B (44P). Refer to intermittent failures troubleshooting (see page 19-45).■

    **NO**—Go to step 15.

15. Turn the ignition switch OFF.

16. Substitute the known-good or new vacuum hose between the electric vacuum pump and 3-way joint.

17. Deplete booster vacuum by pressing the brake pedal several times until the brake pedal becomes hard.

18. Turn the ignition switch ON (II).

19. Check the ELECTRIC VACUUM PUMP RELAY in the DATA LIST with the HDS, and start the engine while pressing the brake pedal lightly.

    NOTE: Do not press the brake pedal hard, press the pedal gently until the brake lights turning on.

    *Does the pump function finish within 8 seconds?*

    **YES**—Replace the original vacuum hose between the electric vacuum pump and 3-way joint (see page 19-42).■

    **NO**—Go to step 20.

20. Check for vacuum leaks or clogging at these parts:

    - Brake booster pressure sensor hose.
    - Brake booster vacuum hoses and their joints.
    - Check valve (intake manifold).
    - Brake booster.

    *Are the parts OK?*

    **YES**—Replace the electric vacuum pump (see page 19-79).■

    **NO**—Repair or replace the leaking or clogging part (s).■

21. Turn the ignition switch OFF.



BACK

Protected by AR

22. Check the connection and pin fit of the electric vacuum pump 2P connector.

    *Is the connector properly connected?*

    **YES**—Go to step 23.

    **NO**—Connect the electric vacuum pump 2P connector properly. If necessary, repair or replace the harness.■

23. Remove electric vacuum pump relay 2, and check the relay (see page 22-64).

    *Is electric vacuum pump relay 2 OK?*

    **YES**—Go to step 24.

    **NO**—Replace electric vacuum pump relay 2.■

24. Remove the No. 17 (15 A) fuse in the under-hood fuse/relay box.

25. Remove the No. 31 (7.5 A) fuse in the auxiliary under-hood fuse/relay box.

26. Check for continuity between electric vacuum pump relay 2 terminal No. 2 and No. 31 (7.5 A) fuse in the auxiliary under-hood fuse/relay box terminal No. 1.

**AUXILIARY UNDER-HOOD FUSE/RELAY BOX**

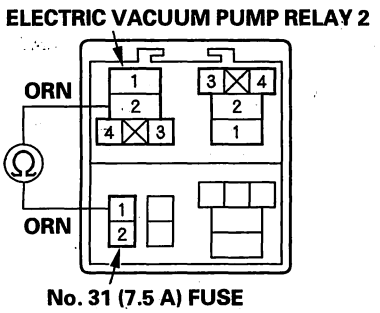


Terminal side of female terminals

*Is there continuity?*

**YES**—Go to step 27.

**NO**—Repair open in the wire between the electric vacuum pump relay 2 and No. 31 (7.5 A) fuse in the auxiliary under-hood fuse/relay box.■

27. Remove electric vacuum pump relay 1.

28. Install the No. 17 (15 A) fuse in the under-hood fuse/relay box.

(cont'd)

Protected by AR



## DTC Troubleshooting (cont'd)

29. Connect electric vacuum pump relay 2 connector terminals No. 1 and No. 2, and electric vacuum pump relay 1 connector terminals No. 1 and No. 2 with a jumper wire.

**AUXILIARY UNDER-HOOD FUSE/RELAY BOX**

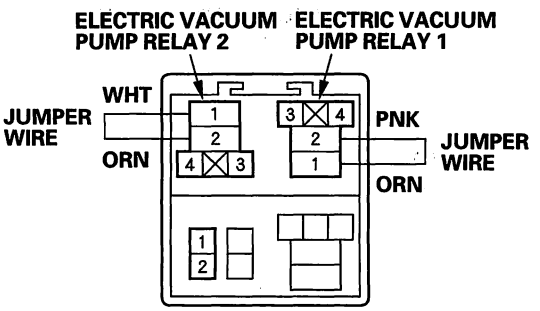


Terminal side of female terminals

*Does electric vacuum pump motor run?*

**YES**—Check for loose terminals in the brake booster pressure sensor 3P connector, the electric vacuum pump relay 2 4P connector, the electric vacuum pump 2P connector, and PCM connector B (44P), then update the PCM if it does not have the latest software, or substitute a known-good PCM, then go to step 1 and recheck. If no DTCs are indicated, and the PCM was substituted, replace the original PCM (see page 11-252).■

**NO**—Go to step 30.

30. Disconnect the electric vacuum pump 2P connector.

31. Measure the voltage between body ground and electric vacuum pump 2P connector terminal No. 1.

**ELECTRIC VACUUM PUMP 2P CONNECTOR**

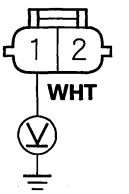


Wire side of female terminals

*Is there battery voltage?*

**YES**—Go to step 32.

**NO**—Repair open in the wire between the electric vacuum pump relay 2 and the electric vacuum pump.■

32. Check for continuity between body ground and electric vacuum pump 2P connector terminal No. 2.

**ELECTRIC VACUUM PUMP 2P CONNECTOR**

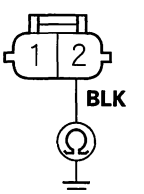


Wire side of female terminals

*Is there continuity?*

**YES**—Replace the electric vacuum pump (see page 19-79).■

**NO**—Repair open in the wire between the electric vacuum pump and body ground (G503).■



BACK

Protected by AR

## DTC P16DA: Electric Vacuum Pump Relay 1 Stuck OFF

1. Turn the ignition switch OFF.

2. Check the No. 17 (15 A) fuse in the under-hood fuse/relay box.

   *Is the fuse blown?*

   **YES**—Repair short in the wire between the electric vacuum pump relay 1 and the No. 17 (15 A) fuse in the under-hood fuse/relay box. Replace the No. 17 (15 A) fuse, and recheck.■

   **NO**—Reinstall the fuse, then go to step 3.

3. Remove electric vacuum pump relay 1, and check the relay (see page 22-64).

   *Is electric vacuum pump relay 1 OK?*

   **YES**—Go to step 4.

   **NO**—Replace electric vacuum pump relay 1.■

4. Measure the voltage between body ground and electric vacuum pump relay 1 terminal No. 2.

   **AUXILIARY UNDER-HOOD FUSE/RELAY BOX**

   **ELECTRIC VACUUM PUMP RELAY 1**

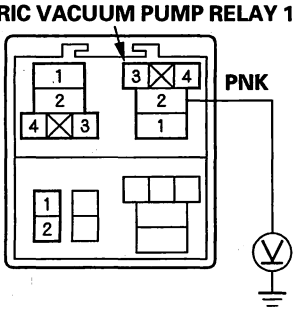


Terminal side of female terminals

   *Is there battery voltage?*

   **YES**—Go to step 5.

   **NO**—Repair open in the wire between electric vacuum pump relay 1 and the No. 17 (15 A) fuse in the under-hood fuse/relay box.■

5. Remove the No. 31 (7.5 A) fuse in the auxiliary under-hood fuse/relay box.

(cont'd)

Protected by AR



## DTC Troubleshooting (cont'd)

6. Check for continuity between electric vacuum pump relay 1 terminal No. 1 and No. 31 (7.5 A) fuse in the auxiliary under-hood fuse/relay box terminal No. 1.

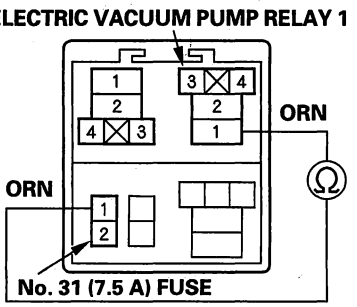


Terminal side of female terminals

*Is there continuity?*

**YES**—Go to step 7.

**NO**—Repair open in the wire between electric vacuum pump relay 1 and No. 31 (7.5 A) fuse in the auxiliary under-hood fuse/relay box.■

7. Check for continuity between body ground and electric vacuum pump relay 1 terminal No. 3.

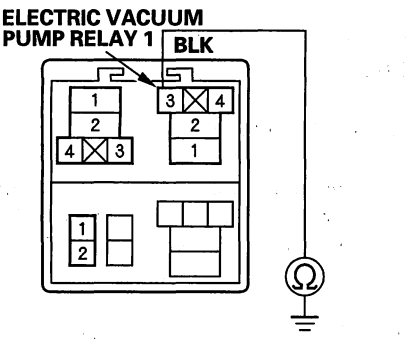


Terminal side of female terminals

*Is there continuity?*

**YES**—Go to step 8.

**NO**—Repair open in the wire between electric vacuum pump relay 1 and body ground (G201).■

8. Short the SCS line with the HDS.

9. Disconnect PCM connector A (44P).



BACK

Protected by AR

10. Check for continuity between electric vacuum pump relay 1 terminal No. 4 and PCM connector A (44P) terminal No. 12.

**AUXILIARY UNDER-HOOD FUSE/RELAY BOX**
Terminal side of female terminals

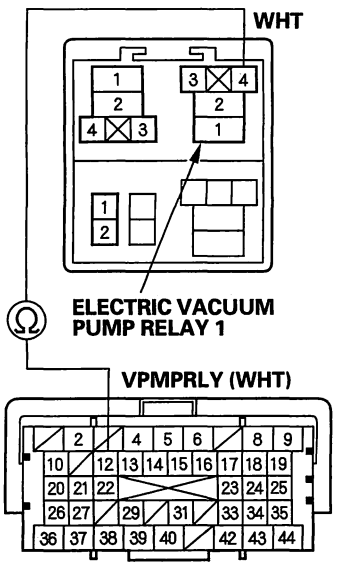


**PCM CONNECTOR A (44P)**
Terminal side of female terminals

*Is there continuity?*

**YES**—Check for loose terminals in the electric vacuum pump relay 1 4P connector, the electric vacuum pump 2P connector, and PCM connector A (44P), then update the PCM if it does not have the latest software, or substitute a known-good PCM, then go to step 1 and recheck. If no DTCs are indicated, and the PCM was substituted, replace the original PCM (see page 11-252). ■

**NO**—Repair open in the wire between electric vacuum pump relay 1 and the PCM. ■

Protected by AR



## DTC Troubleshooting (cont'd)

### DTC P16DB: Electric Vacuum Pump Relay 1/2 Signal Circuit Malfunction

1. Turn the ignition switch OFF.

2. Check the No. 31 (7.5 A) fuse in the auxiliary under-hood fuse/relay box.

   *Is the fuse blown?*

   **YES**—Repair short in the wire between the electric vacuum pump relay 1/2 and the No. 31 (7.5 A) fuse in the auxiliary under-hood fuse/relay box. Replace the No. 31 (7.5 A) fuse and recheck. ■

   **NO**—Remove the fuse, then go to step 3.

3. Remove electric vacuum pump relay 1.

4. Check for continuity between electric vacuum pump relay 1 terminal No. 1 and No. 31 (7.5 A) fuse in the auxiliary under-hood fuse/relay box terminal No. 1.

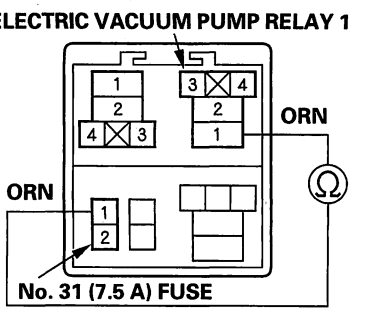


Terminal side of female terminals

   *Is there continuity?*

   **YES**—Go to step 5.

   **NO**—Repair open in the wire between electric vacuum pump relay 1 and No. 31 (7.5 A) fuse in the auxiliary under-hood fuse/relay box. ■

5. Short the SCS line with the HDS.

6. Disconnect PCM connector A (44P).



BACK

Protected by AR

7. Check for continuity between No. 31 (7.5 A) fuse in the auxiliary under-hood fuse/relay box terminal No. 2 and PCM connector A (44P) terminal No. 13.

**AUXILIARY UNDER-HOOD FUSE/RELAY BOX**
Terminal side of female terminals

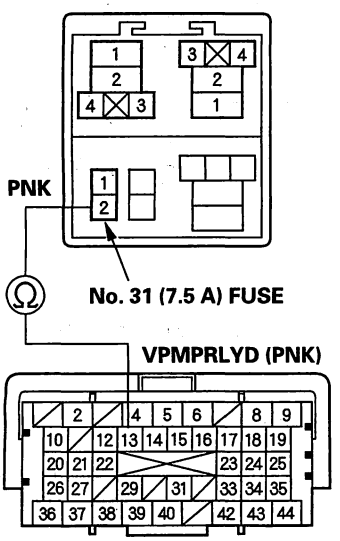


**PCM CONNECTOR A (44P)**
Terminal side of female terminals

*Is there continuity?*

**YES**—Check for loose terminals in PCM connector A (44P), then update the PCM if it does not have the latest software, or substitute a known-good PCM, then go to step 1 and recheck. If no DTCs are indicated, and the PCM was substituted, replace the original PCM (see page 11-252). ■

**NO**—Repair open in the wire between the No. 31 (7.5 A) fuse in the auxiliary under-hood fuse/relay box and the PCM. ■

Protected by AR



## DTC Troubleshooting (cont'd)

**DTC P16DC:** Electric Vacuum Pump Relay 2 Stuck ON

1. Turn the ignition switch OFF.
2. Remove electric vacuum pump relay 2, and check the relay (see page 22-64).

   *Is electric vacuum pump relay 2 OK?*

   **YES**—Go to step 3.

   **NO**—Replace electric vacuum pump relay 2.■
3. Remove the No. 17 (15 A) fuse in the under-hood fuse/relay box.
4. Disconnect the electric vacuum pump 2P connector.
5. Check for continuity between electric vacuum pump relay 2 terminals No. 1 and No. 2.

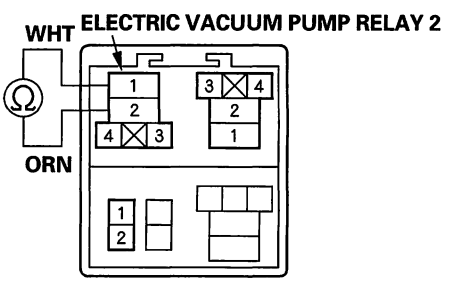


Terminal side of female terminals

   *Is there continuity?*

   **YES**—Repair short in the wires between electric vacuum pump relay 2 (+B line) and (pump motor line).■

   **NO**—Go to step 6.
6. Short the SCS line with the HDS.
7. Disconnect PCM connector A (44P).
8. Turn the ignition switch ON (II).
9. Measure the voltage between body ground and PCM connector A (44P) terminal No. 12.

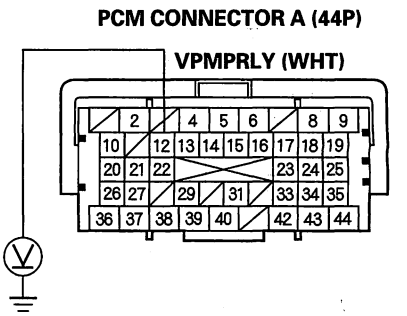


Terminal side of female terminals

   *Is there any voltage?*

   **YES**—Repair short to power in the wire between the electric vacuum pump relay 1/2 and the PCM.■

   **NO**—Update the PCM if it does not have the latest software, or substitute a known-good PCM, then go to step 1 and recheck. If no DTCs are indicated, and the PCM was substituted, replace the original PCM (see page 11-252).■



BACK

Protected by AR

## DTC P16DD: Electric Vacuum Pump Relay 1 Stuck ON

1. Turn the ignition switch OFF.

2. Remove electric vacuum pump relay 1, and check the relay (see page 22-64).

   *Is electric vacuum pump relay 1 OK?*

   **YES**—Go to step 3.

   **NO**—Replace electric vacuum pump relay 1.■

3. Remove the No. 17 (15 A) fuse in the under-hood fuse/relay box, and the No. 31 (7.5 A) fuse in the auxiliary under-hood fuse/relay box.

4. Check for continuity between electric vacuum pump relay 1 terminals No. 1 and No. 2.

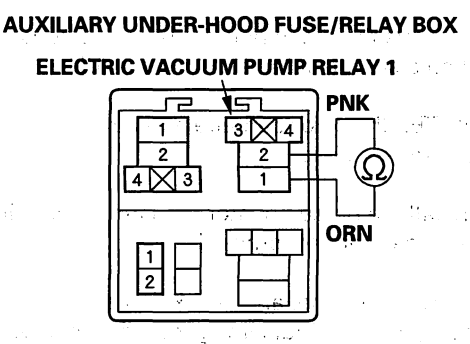


Terminal side of female terminals

   *Is there continuity?*

   **YES**—Repair short in the wires between electric vacuum pump relay 1 (+B line) and (VPMPRLYD line).■

   **NO**—Go to step 5.

5. Short the SCS line with the HDS.

6. Disconnect PCM connector A (44P).

7. Turn the ignition switch ON (II).

8. Measure the voltage between body ground and PCM connector A (44P) terminal No. 13.

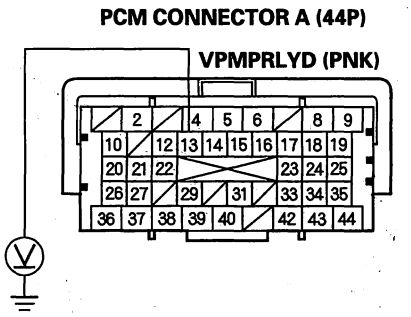


Terminal side of female terminals

   *Is there 3.0 V or more?*

   **YES**—Repair short to power in the wire between the No. 31 (7.5 A) fuse in the auxiliary under-hood fuse/relay box and the PCM.■

   **NO**—Go to step 9.

9. Measure the voltage between body ground and PCM connector A (44P) terminal No. 12.

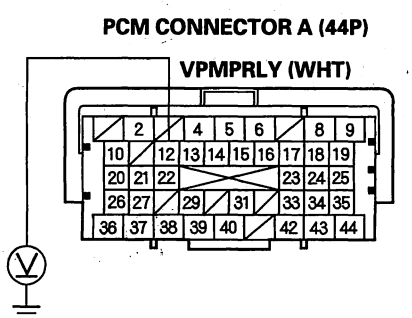


Terminal side of female terminals

   *Is there any voltage?*

   **YES**—Repair short to power in the wire between electric vacuum pump relay 1/2 and the PCM.■

   **NO**—Update the PCM if it does not have the latest software, or substitute a known-good PCM, then go to step 1 and recheck. If no DTCs are indicated, and the PCM was substituted, replace the original PCM (see page 11-252).■

Protected by AR



## Brake Booster Pressure Sensor Replacement

1. Open the air cleaner housing cover (see page 11-394).

2. Release the hooks (A), and move the under-hood fuse/relay box (B) aside. Do not disconnect the connectors.

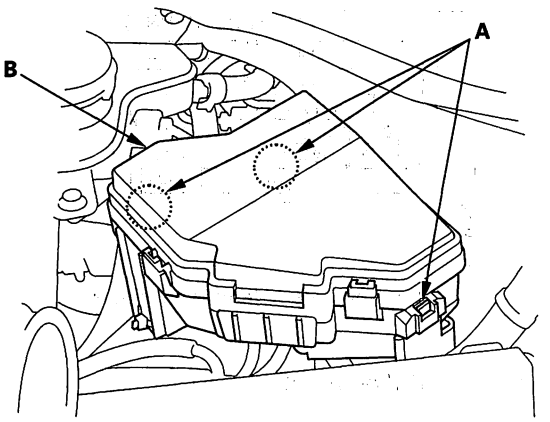


3. Remove the under-hood fuse/relay box stay (A).

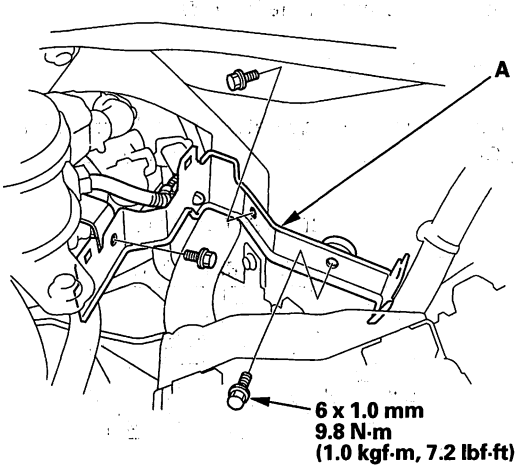


4. Disconnect the brake booster pressure sensor connector (A).

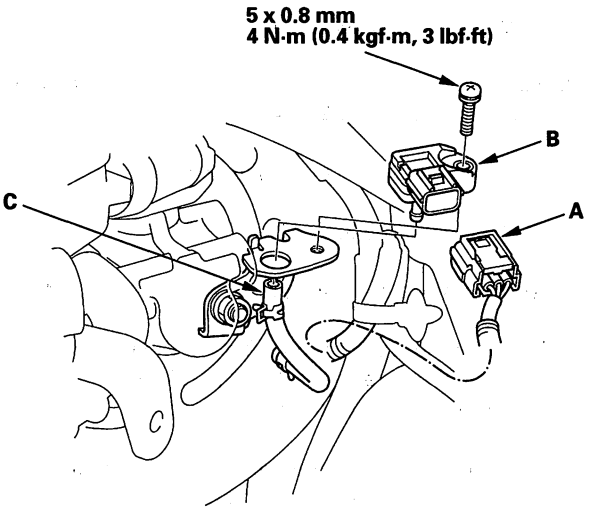


5. Remove the brake booster pressure sensor (B), then disconnect the sensor hose (C).

   NOTE: Check for damage and deterioration of the the sensor hose.

6. Install the brake booster pressure sensor in the reverse order of removal.

7. Start the engine, and check that the electric vacuum pump system indicator goes off (see page 19-43).



BACK

Protected by AR

## Electric Vacuum Pump Replacement

1. Disconnect the electric vacuum pump connector (A).

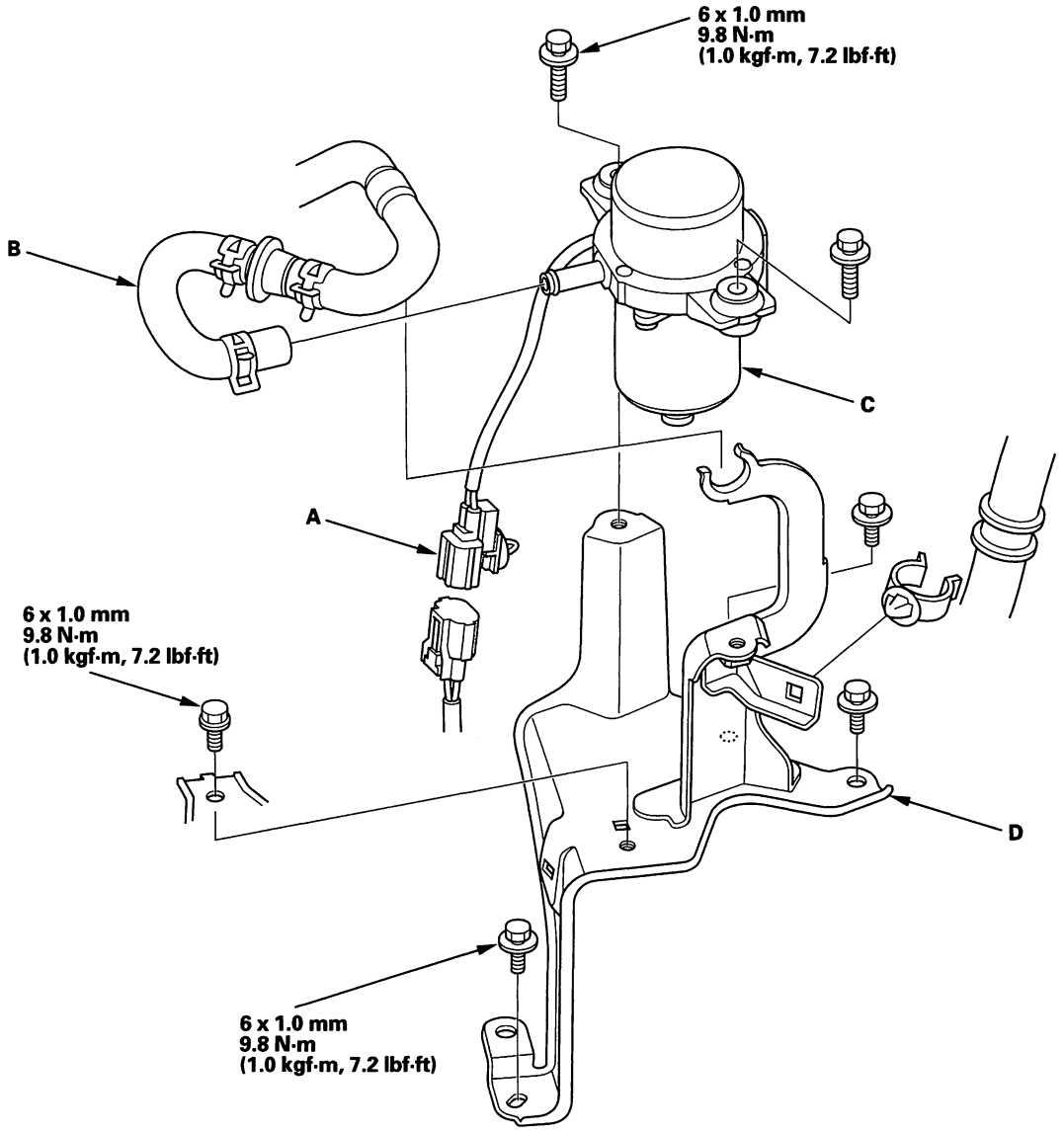


2. Disconnect the vacuum pump hose (B) from the electric vacuum pump (C).
3. Remove the pump from the bracket (D).

   NOTE: Do not disassemble the electric vacuum pump.
4. Replace the pump bracket if necessary.
5. Install the electric vacuum pump in the reverse order of removal.
6. Start the engine, and check that the electric vacuum pump system indicator goes off.

BACK

Protected by AR

BACK

Protected by AR

# Brakes

**Conventional Brake Components** ..... **19-1**

**Electric Vacuum Pump System** ..... **19-41**

**VSA (Vehicle Stability Assist) System Components**
Component Location Index ..... 19-82
General Troubleshooting Information ..... 19-83
DTC Troubleshooting Index ..... 19-86
Symptom Troubleshooting Index ..... 19-88
System Description ..... 19-89
Circuit Diagram ..... 19-98
DTC Troubleshooting ..... 19-101
Symptom Troubleshooting ..... 19-131
Steering Angle Sensor Replacement ..... 19-134
Steering Angle Sensor Center Point Writing ..... 19-135
Yaw Rate-Lateral Acceleration Sensor
Replacement ..... 19-135
VSA Off Switch Test ..... 19-136
VSA Modulator-Control Unit
Removal and Installation ..... 19-137
Wheel Sensor Replacement ..... 19-139

VSA

BACK

Protected by AR

# VSA System Components

## Component Location Index

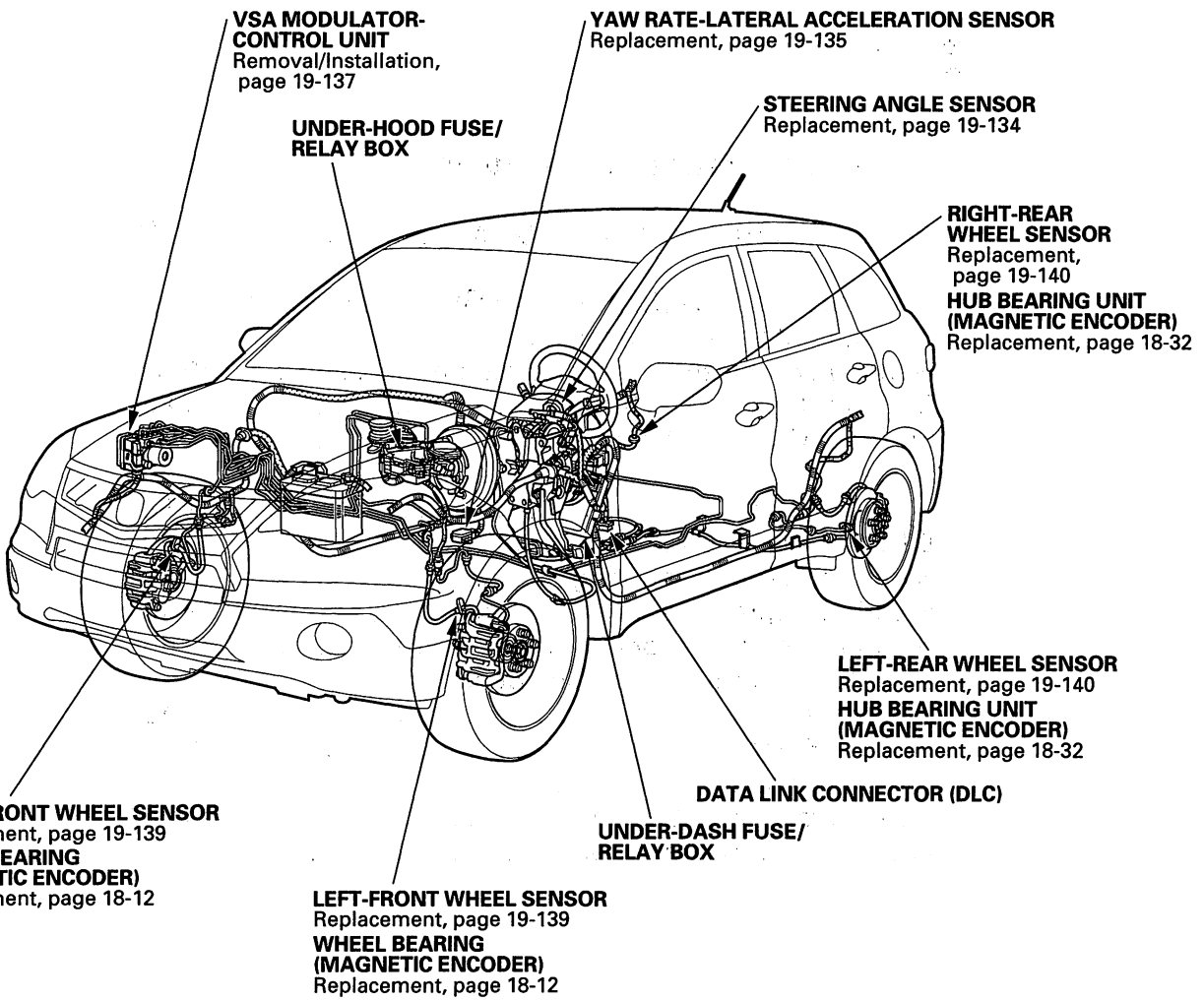




BACK

Protected by AR



# General Troubleshooting Information

## System Indicator

This system has four indicators:

- ABS indicator (A)
- Brake system indicator (BRAKE) (B)
- VSA indicator (C)
- VSA activation indicator (D)

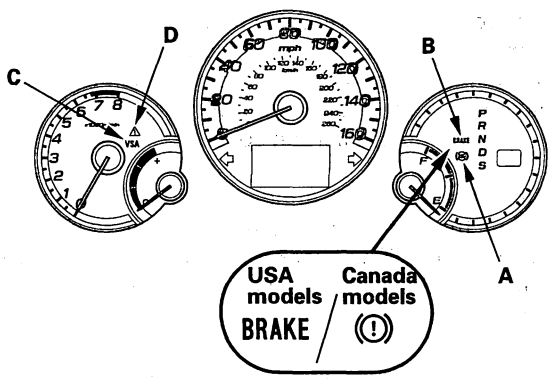


When the system detects a problem, it will turn the appropriate indicators on. Depending on the failure, the VSA modulator-control unit determines which indicators are turned on.
When the system is OK, each indicator comes on for about 2 seconds after turning the ignition switch ON (II), then goes off.

### ABS indicator

The ABS indicator comes on when the ABS function is not working. The brakes still work like a conventional system.

### Brake system indicator

The brake system indicator comes on when the EBD (electronic brake distribution) function is not working, when the parking brake is applied, and/or when the brake fluid level is low.

### VSA indicator

The VSA indicator comes on when the VSA function is not working.

### VSA activation indicator

The VSA activation indicator blinks when the VSA function is activating. The VSA activation indicator comes on when the VSA switch is turned off or when the VSA function is lost.

Each indicator will go off after a problem goes away, but the timing which the VSA modulator-control unit turns off the indicators varies between DTCs.

- DTC 61 or 62:
  The indicators go off automatically when the system returns to normal.
- DTC 11, 13, 15, 17, 25, 26, 27*, 31, 32, 33, 34, 35, 36, 37, 38, 54, 66, 68, 81, 83, 84, 86, 87, 88, 91**, 113, 114 121, 122, 123, 124, 131*, 132, 133, 134, 137, or 138
  The indicators stay on until the ignition switch is turned OFF, whether or not the system returns to normal.
  *: There are some cases that the indicators stay on until the vehicle is driven after the system returns to normal.
  **: There are some cases that the indicators go off automatically when the system returns to normal.
- DTC 12, 14, 16, 18, 21, 22, 23, 24, 51, 52, or 53:
  The indicators stay on until the vehicle is driven after the system returns to normal.

(cont'd)

Protected by AR



## General Troubleshooting Information (cont'd)

### Diagnostic Trouble Code (DTC)

- The memory can hold 10 DTCs. However, when the same DTC is detected more than once, the more recent DTC is written over the earlier one. Therefore, when the same problem is detected repeatedly, it is memorized as a single DTC.
- The DTCs are indicated in the order they occur.
- The DTCs are memorized in the EEPROM. Therefore, the memorized DTCs cannot be canceled by disconnecting the battery. Do the specified procedures to clear the DTCs.

### Self-diagnosis

- Self-diagnosis can be classified into two categories:
  - Initial diagnosis: Done right after the ignition switch is turned ON (II) and until the ABS and VSA indicators go off.
  - Regular diagnosis: Done right after the initial diagnosis until the ignition switch is turned OFF.
- When the system detects a problem, the VSA modulator-control unit shifts to fail-safe mode.

### Kickback

The pump motor operates when the VSA modulator-control unit is functioning, and the fluid in the reservoir is forced out to the master cylinder, causing kickback at the brake pedal.

### Pump Motor

- The pump motor operates when the VSA modulator-control unit is functioning.
- The VSA modulator-control unit checks the pump motor operation during regular diagnosis when the vehicle is driven over 10 mph (15 km/h) the first time after the ignition switch is turned ON (II). You may hear the motor operate at this time, but it is normal.

### Brake Fluid Replacement/Air Bleeding

Brake fluid replacement and air bleeding procedures are identical to the procedures used on vehicles not equipped with the VSA system (see page 19-9).

### How to Troubleshoot DTCs

The troubleshooting procedures assume that the cause of the problem is still present and the ABS and/or VSA indicator is still on. Following a troubleshooting procedure for a code that has been cleared and does not reset can result in incorrect diagnosis.

1. Question the customer about the conditions when the problem occurred, and try to reproduce the same conditions for troubleshooting. Find out when the ABS and/or VSA indicator came on, such as during control, after control, when the vehicle was traveling at a certain speed, etc.

2. When the ABS or VSA indicator does not come on during the test-drive, but troubleshooting is done based on the DTC, check for loose connectors, poor contact of the terminals, etc. before you start troubleshooting.

3. After troubleshooting, or repairs are done, clear the DTCs, and test-drive the vehicle under the same conditions that originally set the DTCs. Make sure the ABS and VSA indicators do not come on.

4. Check for other unit DTCs when connected via F-CAN, if there are DTCs that are related to F-CAN, the most likely cause was that the ignition switch was turned ON (II) with the VSA modulator-control unit connector disconnected. Clear the DTCs. Check for PGM-FI, SH-AWD, and VSA codes, and troubleshoot those first.

### Intermittent Failures

The term "intermittent failure" means a system may have had a failure, but it checks OK now. If the indicator(s) of the system does not come on, check for loose connectors, poor contact of the terminals related to the circuit that you are troubleshooting. If the indicators were on but then went out, the original problem may have been intermittent.



BACK

Protected by AR



## How to Use the HDS (Honda Diagnostic System)

1. If the system indicators stays on, connect the HDS to the data link connector (DLC) (A) located under the driver's side of the dashboard.

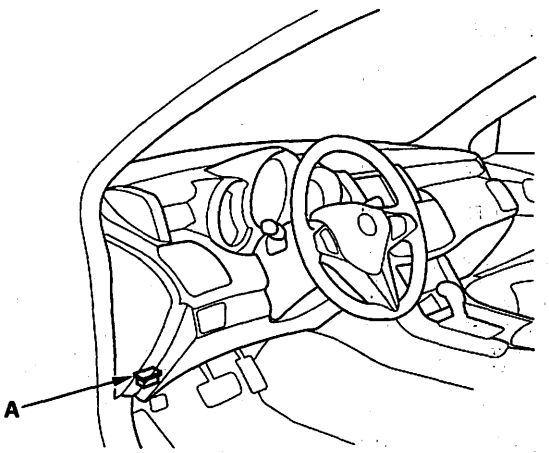


2. Turn the ignition switch ON (II).
3. Make sure the HDS communicates with the vehicle and the VSA modulator-control unit. If it doesn't, troubleshoot the DLC circuit: (see page 11-229).
4. Check the diagnostic trouble code (DTC) and note it. Also check the on-board snapshot data, and download any data found. Then refer to the indicated DTC's troubleshooting, and begin the appropriate troubleshooting procedure.

   NOTE:
   - The HDS can read the DTC, the current data, and other system data.
   - For specific operations, refer to the Help menu that came with the HDS.

## How to Retrieve DTCs

1. With the ignition switch OFF, connect the HDS to the data link connector (DLC) under the driver's side of the dashboard.
2. Turn the ignition switch ON (II).
3. Make sure the HDS communicates with the vehicle and the VSA modulator-control unit. If it doesn't, troubleshoot the DLC circuit (see page 11-229).
4. Follow the prompts on the HDS to display the DTC(s) on the screen. After determining the DTC, refer to the DTC troubleshooting.
5. Turn the ignition switch OFF.

## How to Clear DTCs

1. With the ignition switch OFF, connect the HDS to the data link connector (DLC) under the driver's side of the dashboard.
2. Turn the ignition switch ON (II).
3. Make sure the HDS communicates with the vehicle and the VSA modulator-control unit. If it doesn't, troubleshoot the DLC circuit (see page 11-229).
4. Clear the DTC(s) by following the screen prompts on the HDS.
5. Turn the ignition switch OFF.

Protected by AR



## DTC Troubleshooting Index

| DTC | Detection Item | ABS Indicator | Brake System Indicator | VSA Indicator | VSA Activation Indicator | Note |
|---|---|---|---|---|---|---|
| 11 | Right-front wheel sensor (open/short to body ground/short to power) | ON | ON or OFF* | ON | ON | (see page 19-101) |
| 12 | Right-front wheel sensor (electrical noise/intermittent interruption) | ON | ON or OFF* | ON | ON | (see page 19-106) |
| 13 | Left-front wheel sensor (open/short to body ground/short to power) | ON | ON or OFF* | ON | ON | (see page 19-101) |
| 14 | Left-front wheel sensor (electrical noise/intermittent interruption) | ON | ON or OFF* | ON | ON | (see page 19-106) |
| 15 | Right-rear wheel sensor (open/short to body ground/short to power) | ON | ON or OFF* | ON | ON | (see page 19-101) |
| 16 | Right-rear wheel sensor (electrical noise/intermittent interruption) | ON | ON or OFF* | ON | ON | (see page 19-106) |
| 17 | Left-rear wheel sensor (open/short to body ground/short to power) | ON | ON or OFF* | ON | ON | (see page 19-101) |
| 18 | Left-rear wheel sensor (electrical noise/intermittent interruption) | ON | ON or OFF* | ON | ON | (see page 19-106) |
| 21 | Right-front magnetic encoder malfunction | ON | ON or OFF* | ON | ON | (see page 19-107) |
| 22 | Left-front magnetic encoder malfunction | ON | ON or OFF* | ON | ON | (see page 19-107) |
| 23 | Right rear magnetic encoder malfunction | ON | ON or OFF* | ON | ON | (see page 19-107) |
| 24 | Left-rear magnetic encoder malfunction | ON | ON or OFF* | ON | ON | (see page 19-107) |
| 25 | Yaw rate sensor (sensor unit) | OFF | OFF | ON | ON | (see page 19-107) |
| 26 | Lateral acceleration sensor (sensor unit) | OFF | OFF | ON | ON | (see page 19-107) |
| 27 | Steering angle sensor (hardware) | OFF | OFF | ON | ON | (see page 19-108) |
| 31 | ABS solenoid | ON | ON | ON | ON | (see page 19-108) |
| 32 | ABS solenoid | ON | ON | ON | ON | (see page 19-108) |
| 33 | ABS solenoid | ON | ON | ON | ON | (see page 19-108) |
| 34 | ABS solenoid | ON | ON | ON | ON | (see page 19-108) |
| 35 | ABS solenoid | ON | ON | ON | ON | (see page 19-108) |
| 36 | ABS solenoid | ON | ON | ON | ON | (see page 19-108) |
| 37 | ABS solenoid | ON | ON | ON | ON | (see page 19-108) |
| 38 | ABS solenoid | ON | ON | ON | ON | (see page 19-108) |

*: Brake system indicator turns ON when 3 or more wheels fail.



BACK

Protected by AR



| DTC | Detection Item | ABS Indicator | Brake System Indicator | VSA Indicator | VSA Activation Indicator | Note |
|---|---|---|---|---|---|---|
| 51 | Motor locked | ON | ON | ON | ON | (see page 19-109) |
| 52 | Motor stuck OFF | ON | ON | ON | ON | (see page 19-109) |
| 53 | Motor stuck ON | ON | ON | ON | ON | (see page 19-111) |
| 54 | Valve relay | ON | ON or OFF | ON | ON | (see page 19-112) |
| 61 | IG1 voltage low | ON | ON or OFF | ON | ON | (see page 19-113) |
| 62 | IG1 voltage high | ON | ON | ON | ON | (see page 19-114) |
| 66 | VSA pressure sensor (hardware) | ON | OFF | ON | ON | (see page 19-114) |
| 68 | Brake pedal position switch stuck ON (hardware) | ON | OFF | ON | ON | (see page 19-115) |
| 81 | Central processing unit (CPU) | ON or OFF | ON or OFF | ON or OFF | ON or OFF | (see page 19-116) |
| 83 | PCM communication error | OFF | OFF | ON | ON | (see page 19-116) |
| 84 | Steering angle sensor No center point writing | OFF | OFF | OFF | ON | (see page 19-117) |
| 86 | F-CAN communication | ON or OFF | OFF | ON | ON | (see page 19-117) |
| 87 | Current flow into wheel sensor input amplifier | ON | OFF | ON | ON | (see page 19-122) |
| 88 | Difference in wheel speed | ON | ON or OFF | ON | ON | (see page 19-122) |
| 91 | VSA system | ON | OFF | ON | ON | (see page 19-123) |
| 113 | Yaw rate-lateral acceleration sensor (power supply) | OFF | OFF | ON | ON | (see page 19-123) |
| 114 | Yaw rate-lateral acceleration sensor installation problem | OFF | OFF | ON | ON | (see page 19-124) |
| 121 | VSA selenoid | ON | ON | ON | ON | (see page 19-124) |
| 122 | VSA selenoid | ON | ON | ON | ON | (see page 19-124) |
| 123 | VSA selenoid | ON | ON | ON | ON | (see page 19-124) |
| 124 | VSA selenoid | ON | ON | ON | ON | (see page 19-124) |
| 131 | Yaw rate sensor (software) | OFF | OFF | ON | ON | (see page 19-125) |
| 132 | Lateral acceleration sensor (software) | OFF | OFF | ON | ON | (see page 19-126) |
| 133 | Lateral acceleration sensor (joint failure) | OFF | OFF | ON | ON | (see page 19-126) |
| 134 | Steering angle sensor (software) | OFF | OFF | ON | ON | (see page 19-127) |
| 137 | VSA pressure sensor (software) | ON | OFF | ON | ON | (see page 19-128) |
| 138 | Brake pedal position swiych stuck OFF (software) | ON | OFF | ON | ON | (see page 19-129) |

*: Brake system indicator turns ON when 3 or more wheels fail.

BACK

Protected by AR

# VSA System Components

## Symptom Troubleshooting Index

When the vehicle has one of these symptoms, check for a diagnostic trouble code (DTC) with the HDS. If there is no DTC, do the diagnostic procedure for the symptom, in the sequence listed, until you find the cause.

| Symptom | Diagnostic procedure |
|---|---|
| HDS does not communicate with the VSA modulator-control unit or the vehicle | Troubleshoot the DLC circuit (see page 11-229). |
| VSA activation indicator does not come on at start-up (bulb check) | 1. Do the gauge control module troubleshooting (see page 22-258).<br>2. Substitute a known-good VSA modulator-control unit, then recheck. If it is OK, replace the original VSA modulator-control unit (see page 19-137). |
| VSA activation indicator does not go off, and no DTCs are stored | 1. Symptom troubleshooting (see page 19-131).<br>2. Do the gauge control module troubleshooting (see page 22-258).<br>3. Substitute a known-good VSA modulator-control unit, then recheck. If it is OK, replace the original VSA modulator-control unit (see page 19-137). |
| ABS indicator, brake system indicator, and VSA indicator do not come on at the same time | 1. Do the gauge control module troubleshooting (see page 22-258).<br>2. Substitute a known-good VSA modulator-control unit, then recheck. If it is OK, replace the original VSA modulator-control unit (see page 19-137). |
| ABS indicator, brake system indicator, and VSA indicator do not go off at the same time | 1. Symptom troubleshooting (see page 19-132).<br>2. Do the gauge control module troubleshooting (see page 22-258).<br>3. Substitute a known-good VSA modulator-control unit, then recheck. If it is OK, replace the original VSA modulator-control unit (see page 19-137). |



BACK

Protected by AR



## System Description

### VSA Modulator-control Unit Inputs and Outputs for 46P Connector

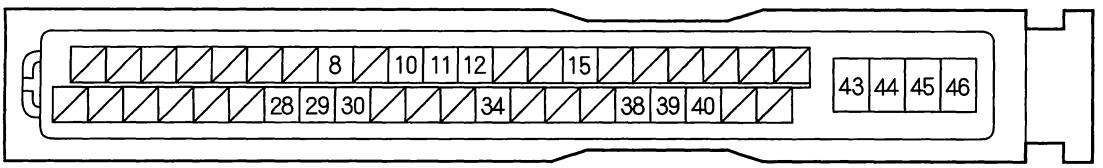


Wire side of female terminals

| Terminal number | Wire color | Terminal sign | Description | Measurement (Disconnect the VSA modulator-control unit 46P connector) | | |
|---|---|---|---|---|---|---|
| | | | | Terminal | Conditions | Voltage |
| 8 | WHT | RR-GND | Detects right-rear wheel sensor signal | —— | —— | —— |
| 10 | RED | RL-GND | Detects left-rear wheel sensor signal | —— | —— | —— |
| 11 | YEL | RL +B | Detects left-rear wheel sensor signal | —— | —— | —— |
| 12 | ORN | FL +B | Detects left-front wheel sensor signal | —— | —— | —— |
| 15 | LT BLU | K-LINE | Communicates with HDS | —— | —— | —— |

(cont'd)

Protected by AR



## System Description (cont'd)

| Terminal number | Wire color | Terminal sign | Description | Measurement (Disconnect the VSA modulator-control unit 46P connector) | | |
|---|---|---|---|---|---|---|
| | | | | Terminal | Conditions | Voltage |
| 28 | PNK | FR-GND | Detects right-front wheel sensor signal | — | — | — |
| 29 | GRN | FR +B | Detects right-front wheel sensor signal | — | — | — |
| 30 | LT GRN | RR +B | Detects right-rear wheel sensor signal | — | — | — |
| 34 | GRY | FL -GND | Detects left-front wheel sensor signal | — | — | — |
| 38 | RED | CAN-L | F-CAN communication circuit | — | — | — |
| 39 | WHT | CAN-H | F-CAN communication circuit | — | — | — |
| 40 | GRN | IG1 | Power source for activating the system | 40—GND | Ignition switch ON (II) | Battery voltage |
| 43 | BLK | GND2 | Ground for the VSA modulator-control unit | 43—GND | At all time | Continuity to ground |
| 44 | WHT | +B SOL | Power source for the valve relay | 44—GND | At all time | Battery voltage |
| 45 | RED | +B MOT | Power source for the motor relay | 45—GND | At all time | Battery voltage |
| 46 | BLK | GND1 | Ground for the pump motor | 46—GND | At all time | Continuity to ground |



BACK

Protected by AR



## System Outline

This system is composed of the VSA modulator-control unit, the wheel sensors, the steering angle sensor, and the yaw rate-lateral acceleration sensor, and the system indicators in the gauge control module. The VSA modulator-control unit controls the ABS, EBD, TCS, VSA, and brake assist with the brake pressure of each wheel and the engine torque.

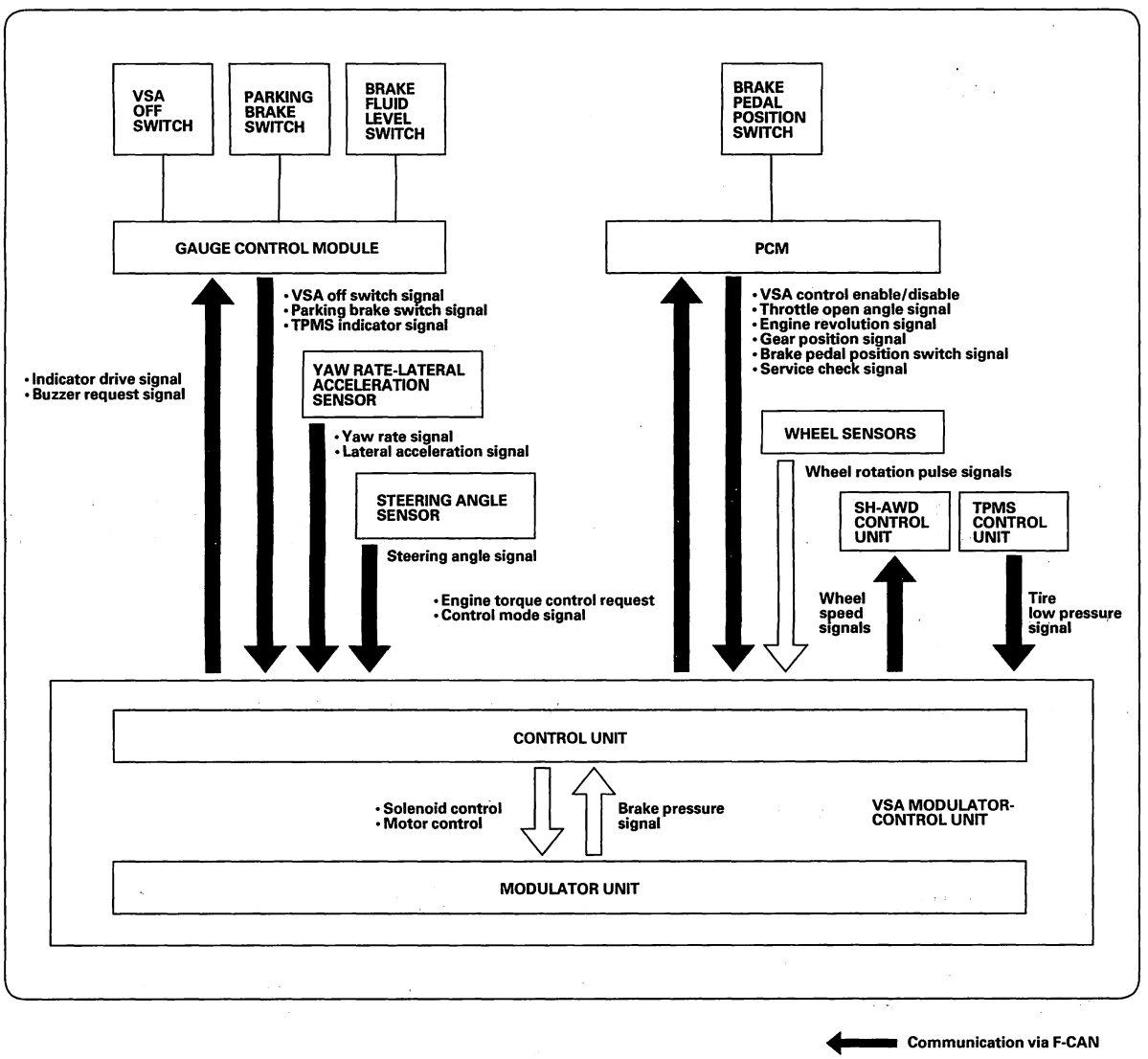


(cont'd)

Protected by AR



## System Description (cont'd)

### ABS Features

**Anti-lock control**
Without ABS, when the brake pedal is pressed while driving, the wheels sometimes lock before the vehicle comes to a stop. In such an event, the maneuverability of the vehicle is reduced if the front wheels are locked, and the stability of the vehicle is reduced if the rear wheels are locked, creating an extremely unstable condition. With ABS, the system precisely controls the slip rate of the wheels to ensure maximum grip force from the tires, and it thereby ensures maneuverability and stability of the vehicle. The ABS calculates the slip rate of the wheels based on the four wheel speeds, then it controls the brake fluid pressure to reach the target slip rate.

**Grip force of tire and road surface**

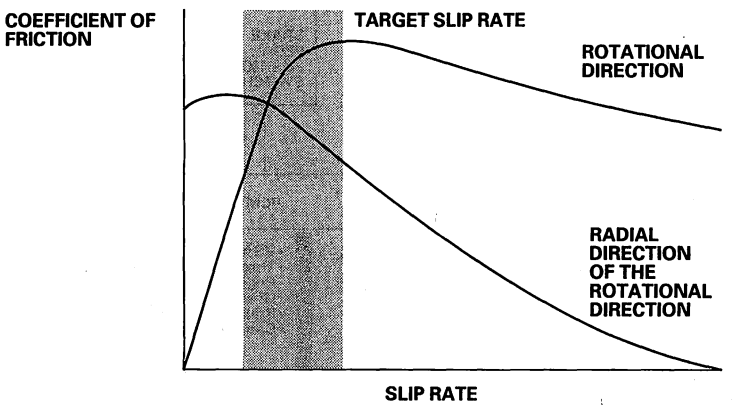


**Main Control**
The control unit detects the wheel speed based on the wheel sensor signals it received, then it calculates the vehicle speed based on the detected wheel speed. The control unit detects the vehicle speed during deceleration based on the rate of deceleration.

The control unit calculates the slip rate of each wheel, and transmits the control signal to the modulator unit solenoid valve when the slip rate is high.

The hydraulic control has three modes: Pressure intensifying, pressure reducing, and pressure retaining.

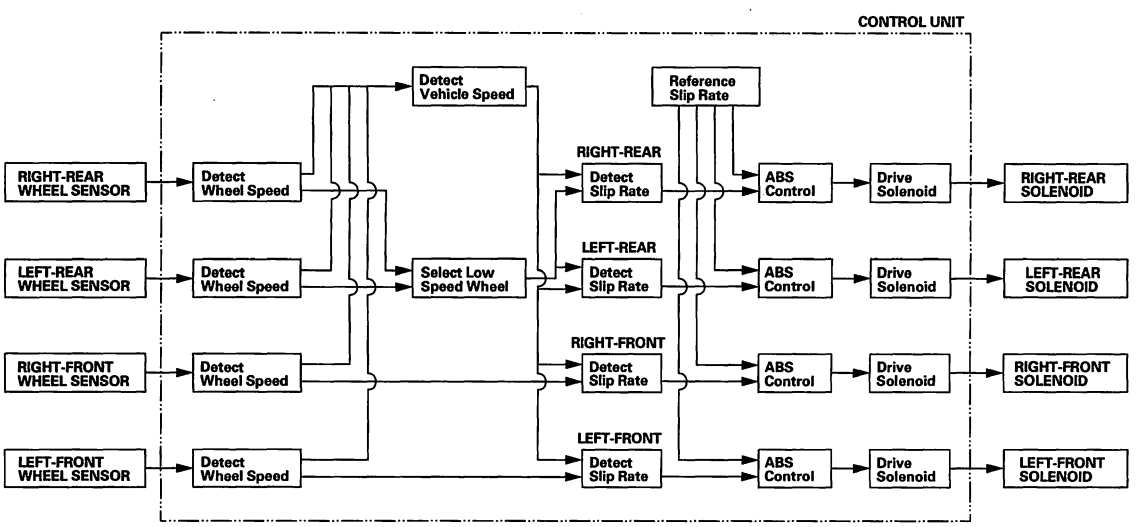




BACK

Protected by AR



## EBD Features

The electronic brake distribution (EBD) feature helps control vehicle braking by adjusting the rear brake force in accordance with the rear wheel load before the ABS operates. Based on the wheel sensor signals, the control unit uses the modulator to control the rear brakes individually. When the rear wheel speed is less than the front wheel speed, the VSA modulator-control unit retains the current rear brake fluid pressure by closing the inlet valve in the modulator. As the rear wheel speed increases and approaches the front wheel speed, the VSA modulator-control unit increases the rear brake fluid pressure by momentarily opening the inlet valve. This whole process is repeated very rapidly. While this is happening, kickback is felt at the brake pedal.

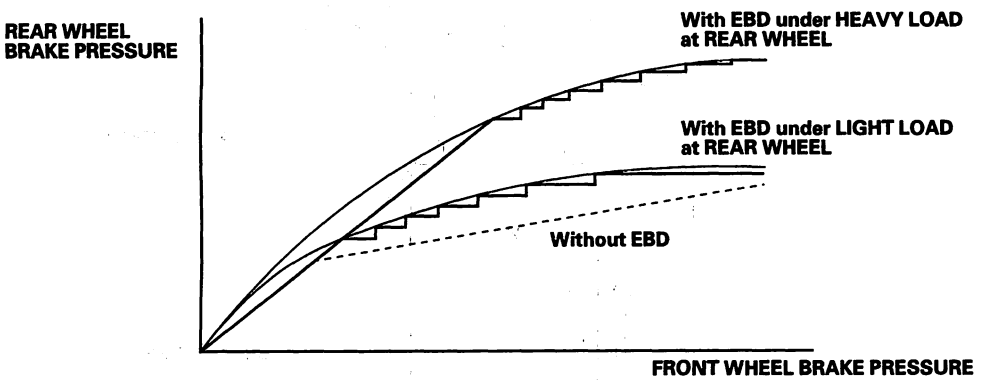


(cont'd)

Protected by AR



## System Description (cont'd)

### TCS Features

When a drive wheel loses traction on a slippery road surface and starts to spin, the VSA modulator-control unit applies brake pressure to the spinning wheel and sends engine torque control request to the PCM to slow the spinning wheel and keep traction.

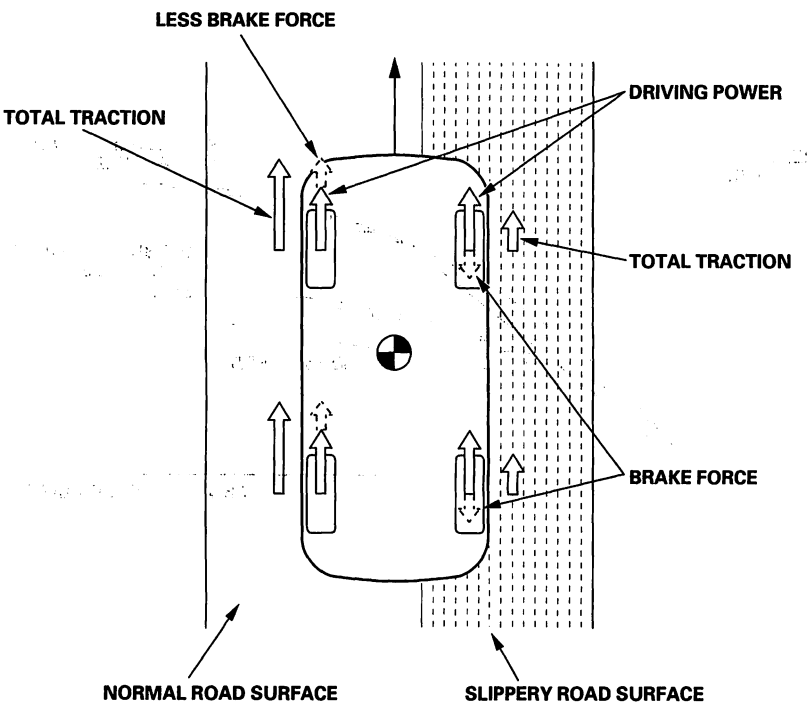




BACK

Protected by AR



## VSA System Features

**Oversteer control**
Applies the brake to the front and rear outside wheels

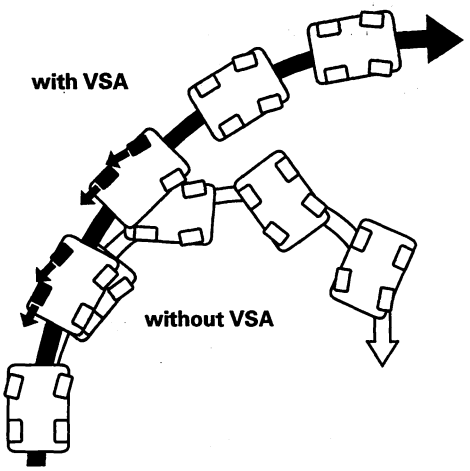


**The brake makes the yaw rate opposite to the turning direction**

**Understeer control**
- Applies the brake to the front and rear inside wheels
- Controls the engine torque when accelerating

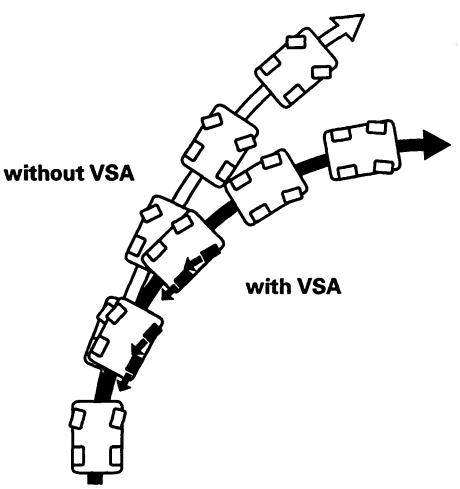


**The brake increases the yaw rate toward the turning direction**

**The throttle control effect;**
- **reduces vehicle speed**
- **increases cornering force**

(cont'd)

Protected by AR



## System Description (cont'd)

### Brake Assist Features

Brake assist helps ensure that any driver can achieve the full braking potential of the vehicle by increasing brake system pressure in a panic situation, bringing the vehicle into a full ABS stop.
Each time the ignition switch is turned ON (II), the VSA modulator-control unit learns the current driver's normal braking characteristics by monitoring the brake pressure sensor and the brake pedal position switch at each stop. Using these inputs and their values, the VSA modulator-control unit is able to learn the driver's normal braking habits, and then determine the difference between a normal stop and a panic stop for the individual driver of the vehicle. If during a panic stop the VSA modulator-control unit determines that the brake system pressure increases above a learned threshold in less than a learned amount of time, the VSA modulator-control unit engages brake assist. Because the brake system pressure crossed the threshold before the time threshold had expired, the VSA modulator-control unit goes into brake assist mode.

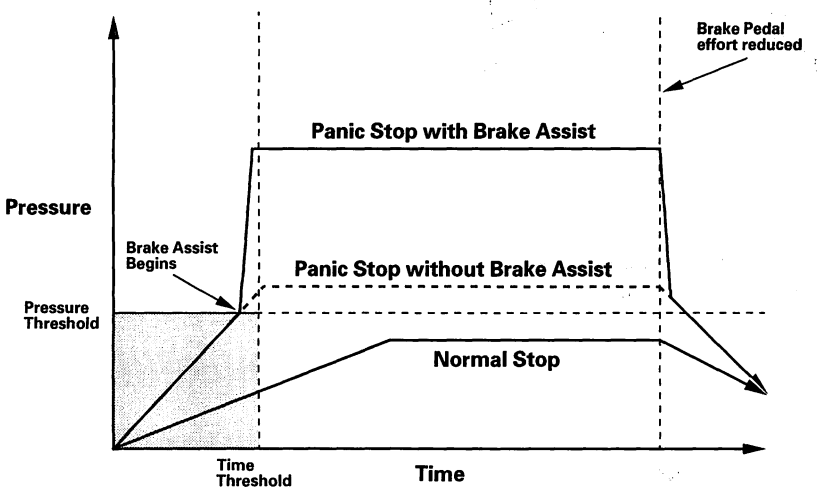




BACK

Protected by AR



## Modulator Unit

The modulator unit consists of the inlet solenoid valve, the outlet solenoid valve, the VSA NO (normally open) solenoid valve, the VSA NC (normally closed) solenoid valve, the reservoir, the pump, the pump motor, and the damping chamber.
The hydraulic control has three modes at ABS action; pressure intensifying, pressure retaining, and pressure reducing. And pressure adding mode is combined at TCS, VSA, and brake assist action.
The hydraulic circuit is an independent four channel type; one channel for each wheel.

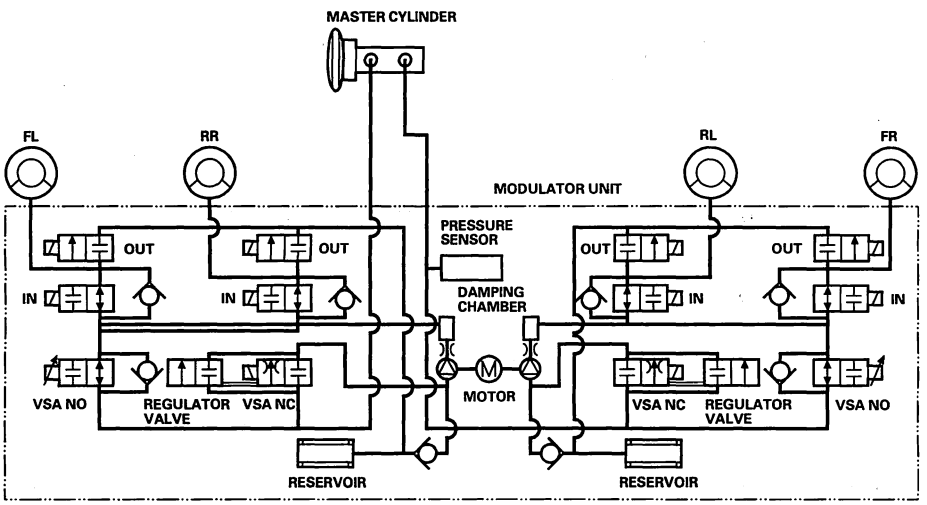


| Mode | VSA NO Valve | VSA NC Valve | Inlet Solenoid Valve | Outlet Solenoid Valve | Brake Fluid |
|---|---|---|---|---|---|
| **Pressure intensifying mode** | open | closed | open | closed | Master cylinder fluid is pumped out to the caliper. |
| **Pressure retaining mode** | open | closed | closed | closed | Caliper fluid is retained by the inlet and outlet valves. |
| **Pressure reducing mode** | open | closed | closed | open | • Caliper fluid flows through the outlet valve to the reservoir.<br>• The motor pumps the reservoir fluid through the damping chamber to the master cylinder. |
| **Pressure adding mode** | closed | open | open | closed | • Master cylinder fluid is pumped out by pump with motor through VSA NC valve to the caliper.<br>• Caliper fluid pressure exceed master cylinder pressure. |

Protected by AR

# VSA System Components

## Circuit Diagram

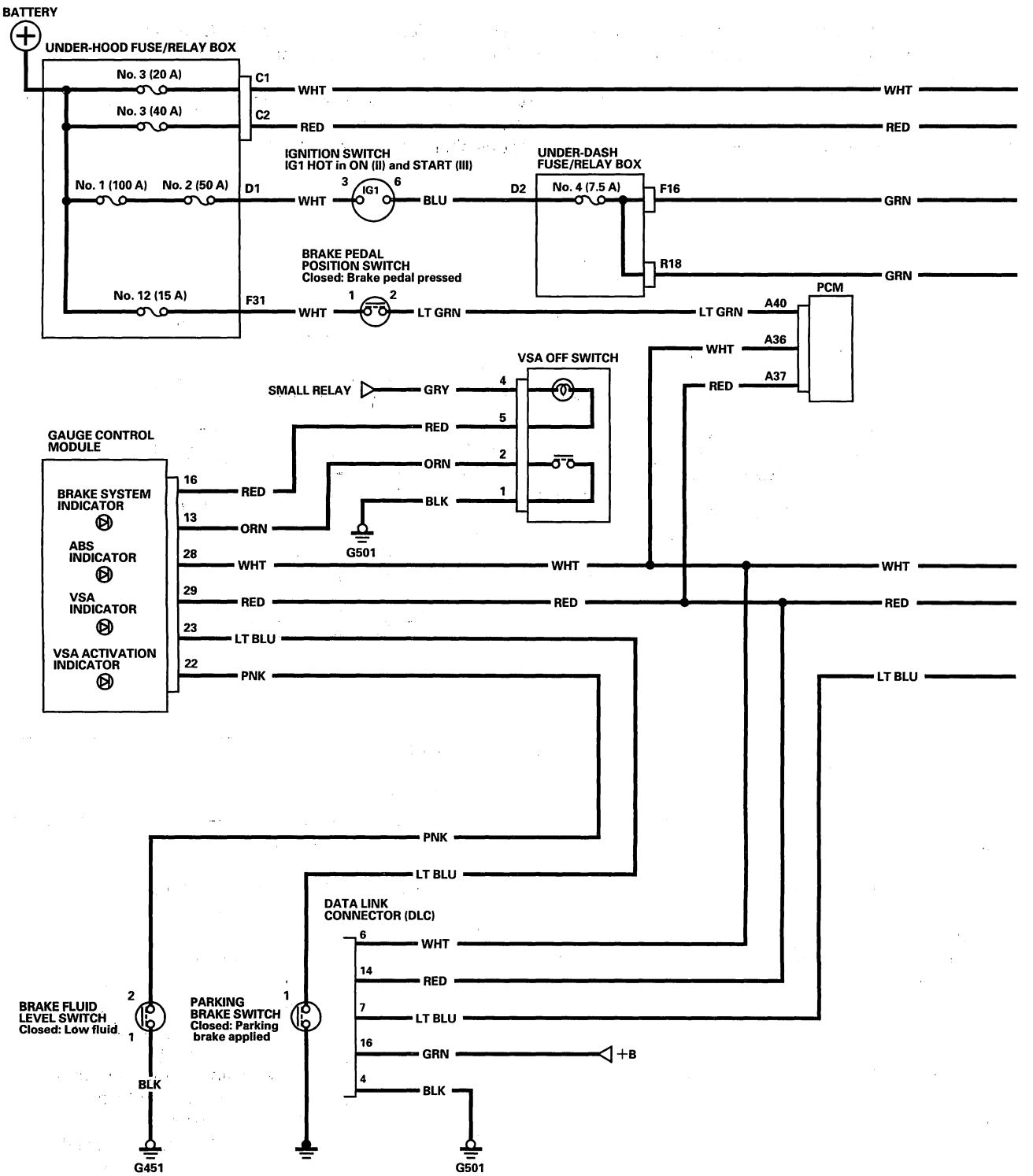




BACK

Protected by AR



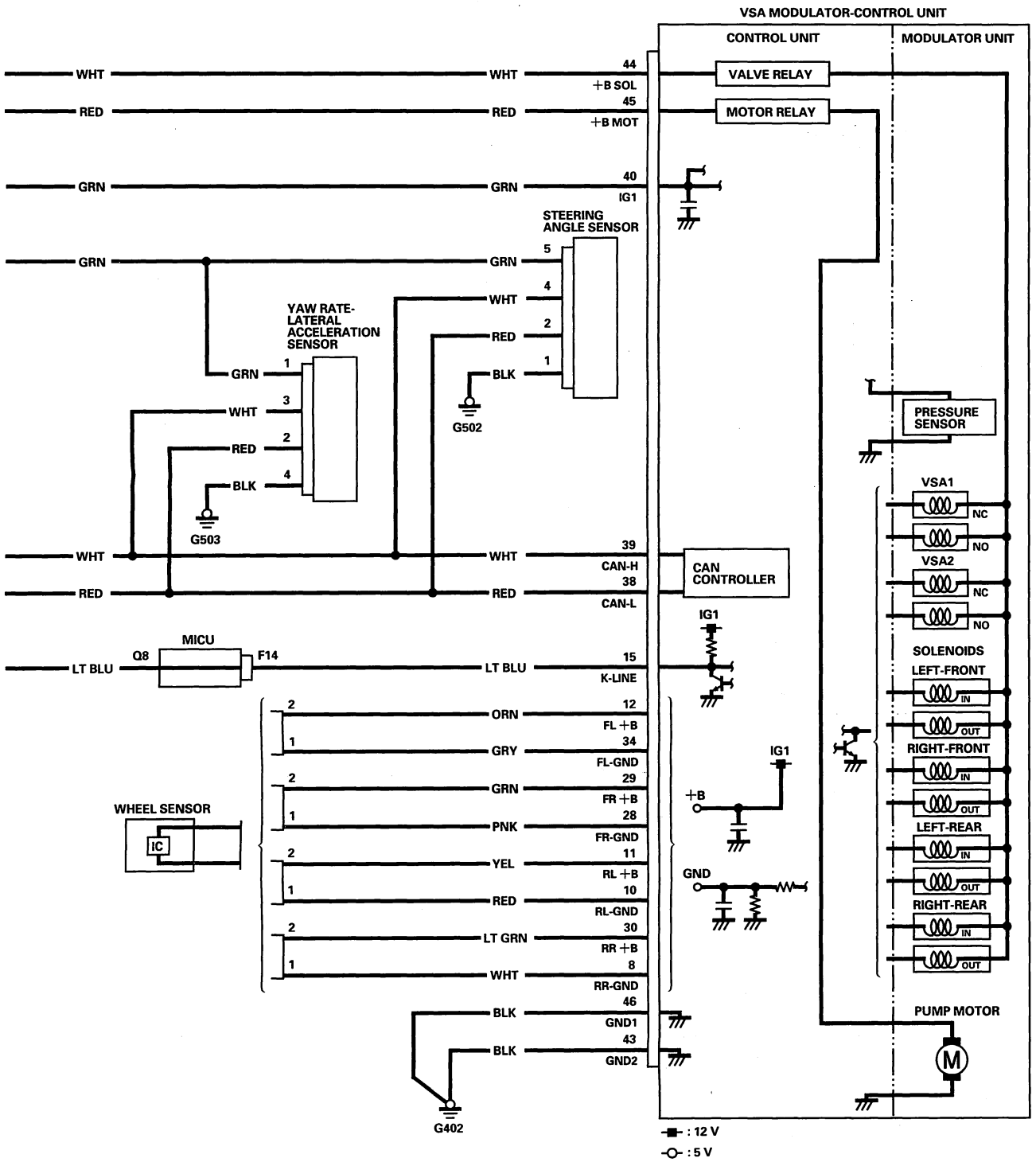


(cont'd)

Protected by AR

# VSA System Components

## Circuit Diagram (cont'd)

**UNDER-HOOD FUSE/RELAY BOX CONNECTOR C (2P)**

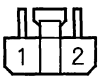


**BRAKE PEDAL POSITION SWITCH 4P CONNECTOR**

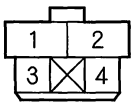


**BRAKE FLUID LEVEL SWITCH 2P CONNECTOR**

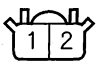


**PARKING BRAKE SWITCH 1P CONNECTOR**

**VSA OFF SWITCH 5P CONNECTOR**

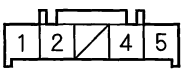


**STEERING ANGLE SENSOR 5P CONNECTOR**

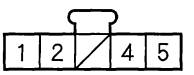


**UNDER-DASH FUSE/RELAY BOX CONNECTOR F (34P)**

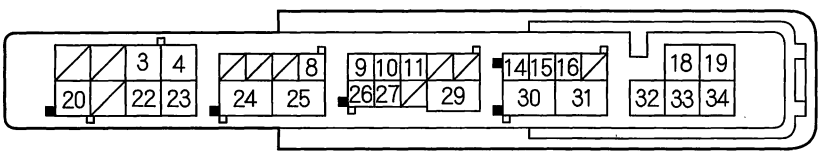


**WHEEL SENSOR 2P CONNECTOR**

**UNDER-DASH FUSE/RELAY BOX CONNECTOR R (20P)**

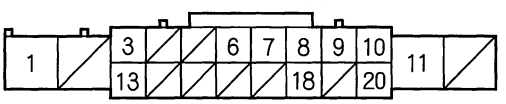


**YAW RATE-LATERAL ACCELERATION SENSOR 4P CONNECTOR**

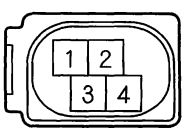


**GAUGE CONTROL MODULE 36P CONNECTOR**

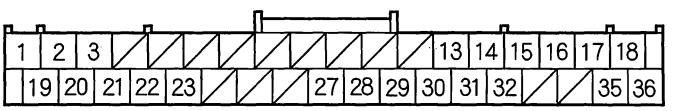


**VSA MODULATOR-CONTROL UNIT 46P CONNECTOR**

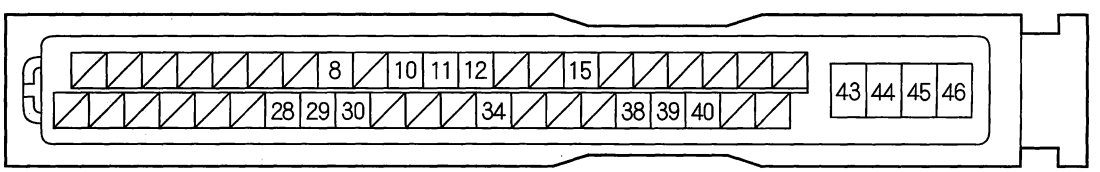


Wire side of female terminals

**PCM CONNECTOR A (44P)**

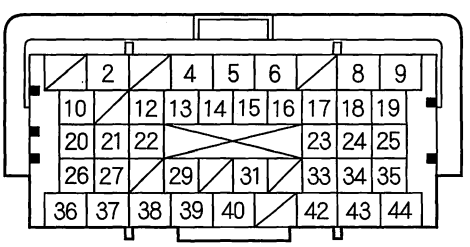


**DATA LINK CONNECTOR (DLC)**

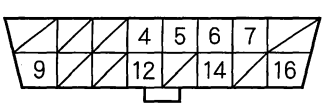


Terminal side of female terminals



BACK

Protected by AR



## DTC Troubleshooting

### DTC 11, 13, 15, 17: Wheel Sensor (Open/Short to Body Ground/Short to Power)

1. Turn the ignition switch ON (II).

2. Check for DTCs with the HDS.

   *Is DTC 87 indicated with DTC 11,13,15, and/or 17 at the same time?*

   **YES**—Go to step 9.

   **NO**—Go to step 3.

3. Clear the DTC with the HDS.

4. Turn the ignition switch OFF, then turn it ON (II) again.

5. Check for DTCs with the HDS.

   *Is DTC 11, 13, 15, and/or 17 indicated?*

   **YES**—Go to step 6.

   **NO**—Intermittent failure, the system is OK at this time. Check for loose terminals between the wheel sensor 2P connector and the VSA modulator-control unit 46P connector. Refer to intermittent failures troubleshooting (see page 19-84).■

6. Turn the ignition switch OFF.

7. Check for loose terminals between the wheel sensor 2P connector and the VSA modulator-control unit 46P connector.

   *Are their connections OK?*

   **YES**—Go to step 8.

   **NO**—Reconnect the connector and retest.■

8. Check the appropriate wheel sensor is properly mounted (see page 19-139).

| DTC | Appropriate Wheel Sensor |
|---|---|
| 11 | Right-front |
| 13 | Left-front |
| 15 | Right-rear |
| 17 | Left-rear |

   *Is the wheel sensor installation OK?*

   **YES**—Go to step 10.

   **NO**—Reinstall the wheel sensor, and check the mounting position (see page 19-139).■

9. Turn the ignition switch OFF.

10. Disconnect the VSA modulator-control unit 46P connector.

11. Start the engine.

(cont'd)

Protected by AR



## DTC Troubleshooting (cont'd)

12. Measure the voltage between body ground and the appropriate wheel sensor +B and GND terminals of the VSA modulator-control unit 46P connector individually (see table).

| DTC | Appropriate Terminal | |
|---|---|---|
| | +B | GND |
| 11 (Right-front) | FR +B: No. 29 | FR-GND: No. 28 |
| 13 (Left-front) | FL +B: No. 12 | FL-GND: No. 34 |
| 15 (Right-rear) | RR +B: No. 30 | RR-GND: No. 8 |
| 17 (Left-rear) | RL +B: No. 11 | RL-GND: No. 10 |

**VSA MODULATOR-CONTROL UNIT 46P CONNECTOR**

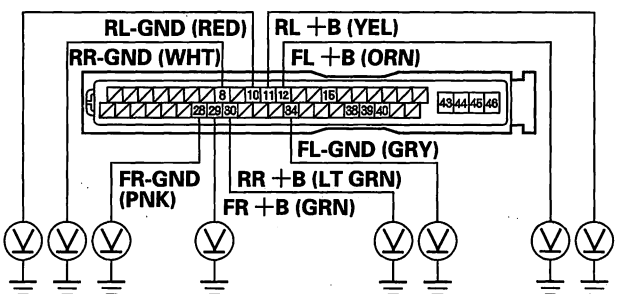


Wire side of female terminals

*Is there 0.1 V or more?*

**YES**—Repair short to power in the wire between the VSA modulator-control unit and the appropriate wheel sensor.■

**NO**—Go to step 13.

13. Turn the ignition switch OFF.

14. Check for continuity between body ground and the appropriate wheel sensor +B and GND terminals of the VSA modulator-control unit 46P connector individually (see table).

| DTC | Appropriate Terminal | |
|---|---|---|
| | +B | GND |
| 11 (Right-front) | FR +B: No. 29 | FR-GND: No. 28 |
| 13 (Left-front) | FL +B: No. 12 | FL-GND: No. 34 |
| 15 (Right-rear) | RR +B: No. 30 | RR-GND: No. 8 |
| 17 (Left-rear) | RL +B: No. 11 | RL-GND: No. 10 |

**VSA MODULATOR-CONTROL UNIT 46P CONNECTOR**

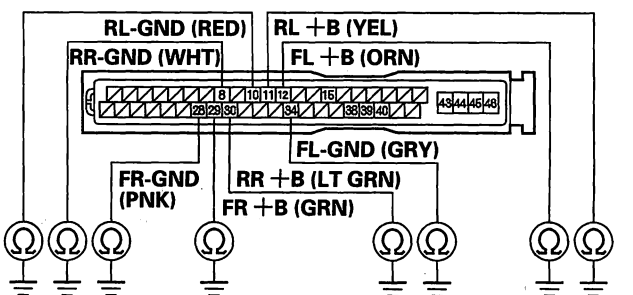


Wire side of female terminals

*Is there continuity?*

**YES**—Go to step 15.

**NO**—Go to step 17.



BACK

Protected by AR



15. Disconnect the appropriate wheel sensor 2P connector.

16. Check for continuity between body ground and the appropriate wheel sensor +B and GND terminals of the VSA modulator-control unit 46P connector individually (see table).

| DTC | Appropriate Terminal | |
|---|---|---|
| | +B | GND |
| 11 (Right-front) | FR +B: No. 29 | FR-GND: No. 28 |
| 13 (Left-front) | FL +B: No. 12 | FL-GND: No. 34 |
| 15 (Right-rear) | RR +B: No. 30 | RR-GND: No. 8 |
| 17 (Left-rear) | RL +B: No. 11 | RL-GND: No. 10 |

**VSA MODULATOR-CONTROL UNIT 46P CONNECTOR**

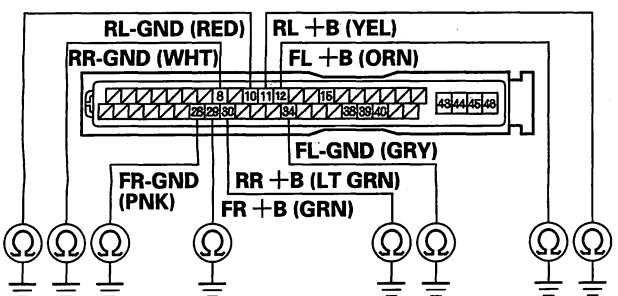


Wire side of female terminals

*Is there continuity?*

**YES**—Repair short to body ground in the wire between the VSA modulator-control unit and the appropriate wheel sensor.■

**NO**—Replace the appropriate wheel sensor (see page 19-139).■

17. Measure resistance between the appropriate VSA modulator-control unit 46P connector wheel sensor +B and GND terminals (see table), then Measure resistance between the same terminals and reverse the positive and negative tester probes.

| DTC | Appropriate Terminal | |
|---|---|---|
| | +B | GND |
| 11 (Right-front) | FR +B: No. 29 | FR-GND: No. 28 |
| 13 (Left-front) | FL +B: No. 12 | FL-GND: No. 34 |
| 15 (Right-rear) | RR +B: No. 30 | RR-GND: No. 8 |
| 17 (Left-rear) | RL +B: No. 11 | RL-GND: No. 10 |

**VSA MODULATOR-CONTROL UNIT 46P CONNECTOR**

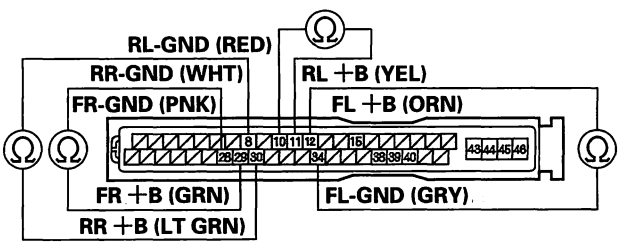


Wire side of female terminals

*Is the resistance infinity at both directions?*

**YES**—Go to step 18.

**NO**—Go to step 20.

(cont'd)

Protected by AR



## DTC Troubleshooting (cont'd)

18. Disconnect the appropriate wheel sensor 2P connector.

19. On the sensor side, measure resistance between appropriate wheel sensor 2P connector terminals No. 1 and No. 2, then measure resistance between the same terminals and reverse the positive and negative tester probes.

**WHEEL SENSOR 2P CONNECTOR**

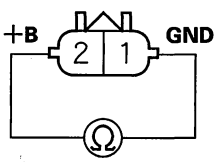


Terminal side of female terminals

*Is the resistance infinity at both directions?*

**YES**—Replace the appropriate wheel sensor (see page 19-139).

**NO**—Repair open in the wire between the appropriate wheel sensor and the VSA modulator-control unit. ■

20. Check for continuity between the appropriate VSA modulator-control unit 46P connector wheel sensor +B and GND terminals (see table), then check for continuity between the same terminals and reverse the positive and negative taster probes.

| DTC | Appropriate Terminal | |
|---|---|---|
| | +B | GND |
| 11 (Right-front) | FR +B: No. 29 | FR-GND: No. 28 |
| 13 (Left-front) | FL +B: No. 12 | FL-GND: No. 34 |
| 15 (Right-rear) | RR +B: No. 30 | RR-GND: No. 8 |
| 17 (Left-rear) | RL +B: No. 11 | RL-GND: No. 10 |

**VSA MODULATOR-CONTROL UNIT 46P CONNECTOR**

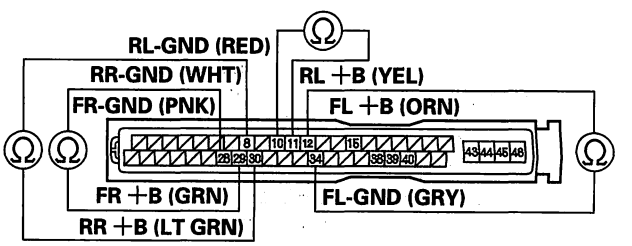


Wire side of female terminals

*Is there continuity in both directions?*

**YES**—Go to step 21.

**NO**—Check for loose terminals in the VSA modulator-control unit 46P connector. If necessary, substitute a known-good VSA modulator-control unit (see page 19-137) and resest. ■



BACK

Protected by AR



21. Disconnect the appropriate wheel sensor 2P connector.

22. Check for continuity between the appropriate VSA modulator-control unit 46P connector wheel sensor +B and GND terminals (see table), then check for continuity between the same terminals and reverse the positive and negative tester probes.

| DTC | Appropriate Terminal | |
|---|---|---|
| | +B | GND |
| 11 (Right-front) | FR +B: No. 29 | FR-GND: No. 28 |
| 13 (Left-front) | FL +B: No. 12 | FL-GND: No. 34 |
| 15 (Right-rear) | RR +B: No. 30 | RR-GND: No. 8 |
| 17 (Left-rear) | RL +B: No. 11 | RL-GND: No. 10 |

**VSA MODULATOR-CONTROL UNIT 46P CONNECTOR**

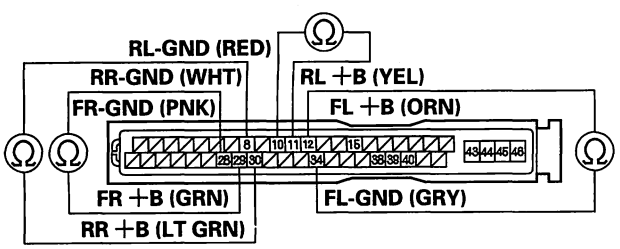


Wire side of female terminals

*Is there continuity in both directions?*

**YES**—Repair short in the wires between the VSA modulator-control unit and the appropriate wheel sensor. ■

**NO**—Replace the appropriate wheel sensor (see page 19-139). ■

Protected by AR



## DTC Troubleshooting (cont'd)

### DTC 12, 14, 16, 18: Wheel Sensor (Electrical Noise/Intermittent Interruption)

NOTE: If the ABS and other indicators come on because of electrical noise, the indicators will go off when you test-drive the vehicle speed at 10 mph (15 km/h) or more and noise is gone.

1. Check the appropriate wheel sensor and magnetic encoder on the front wheel bearing (see page 18-12) or magnetic encoder on the rear hub bearing unit (see page 18-32).

| DTC | Appropriate Wheel Sensor |
|---|---|
| 12 | Right-front |
| 14 | Left-front |
| 16 | Right-rear |
| 18 | Left-rear |

*Are they installed correctly and in good condition?*

**YES**—Go to step 2.

**NO**—Reinstall or replace the appropriate wheel sensor, front wheel bearing, or rear hub bearing unit, and recheck by test-driving. ■

2. Substitute an appropriate known-good wheel sensor (see page 19-139).

3. Turn the ignition switch ON (II).

4. Clear the DTC with the HDS.

5. Test-drive the vehicle at 10 mph (15 km /h) or more.

6. Check for DTCs with the HDS.

*Is DTCs 12, 14, 16, and/or 18 indicated?*

**YES**—Go to step 7.

**NO**—Replace the original wheel sensor (see page 19-139).

7. Substitute an appropriate known-good front wheel bearing (see page 18-12), or rear hub bearing unit (see page 18-32).

8. Clear the DTC with the HDS.

9. Test-drive the vehicle speed at 10 mph (15 km /h) or more.

10. Check for DTCs with the HDS.

*Is DTCs 12, 14, 16, and/or 18 indicated?*

**YES**—Check for loose terminals in the VSA modulator-control unit 46P connector. If necessary, substitute a known-good VSA modulator-control unit (see page 19-137) and retest. ■

**NO**—Replace the original front wheel bearing or rear hub bearing unit:

- Front: Replace the front wheel bearing (see page 18-12). ■
- Rear: Replace the rear hub bearing unit (see page 18-32). ■



BACK

Protected by AR



## DTC 21, 22, 23, 24: Magnetic Encoder Malfunction

1. Turn the ignition switch ON (II).
2. Clear the DTC with the HDS.
3. Test-drive the vehicle at 31 mph (50 km/h) or more.
4. Check for DTCs with the HDS.

   *Is DTC 21, 22, 23,and/or 24 indicated?*

   **YES**—Go to step 5.

   **NO**—Intermittent failure, the system is OK at this time. Check for loose terminals between the wheel sensor 2P connector and the VSA modulator-control unit 46 P connector. Refer to intermittent failures troubleshooting (see page 19-84).

5. Inspect the appropriate magnetic encoder for debris or cracks.

| DTC | Appropriate Magnetic Encoder | Note |
|---|---|---|
| 21 | Right-front | Remove the driveshaft outboard joint from the appropriate wheel hub (see page 18-13). |
| 22 | Left-front | |
| 23 | Right-rear | Remove the hub bearing unit (see page 18-31). |
| 24 | Left-rear | |

*Is the magnetic encoder surface OK?*

**YES**—Check for loose terminals in the VSA modulator-control unit 46P connector. If necessary, substitute a known-good VSA modulator-control unit (see page 19-137) and retest.■

**NO**—Replace the front wheel bearing or the rear hub bearing unit:

- Front: Replace the front wheel bearing (see page 18-12).■
- Rear: Replace the rear hub bearing unit (see page 18-32).■

## DTC 25: Yaw Rate Sensor (Sensor Unit)

## DTC 26: Lateral Acceleration Sensor (Sensor Unit)

1. Substitute a known-good yaw rate-lateral acceleration sensor.
2. Turn the ignition switch ON (II).
3. Clear the DTC with the HDS.
4. Test-drive the vehicle. Drive the vehicle at 19 mph (30 km/h) or more, and go a distance of 984 ft (300 m) or more.
5. Check for DTCs with the HDS.

   *Is DTC 25 or 26 indicated?*

   **YES**—Check for loose terminals in the VSA modulator-control unit 46P connector. If necessary, substitute a known-good VSA modulator-control unit (see page 19-137) and retest.■

   **NO**—Replace the original yaw rate-lateral acceleration sensor.■

Protected by AR



## DTC Troubleshooting (cont'd)

### DTC 27: Steering Angle Sensor (Hardware)

1. Turn the ignition switch ON (II).
2. Check for DTCs with the HDS.

   *Is DTC 86 indicated with DTC 27 at the same time?*

   **YES**—Do the DTC 86 troubleshooting (see page 19-117). ■

   **NO**—Check the installation of the steering angle sensor (see page 19-134), and for loose terminals at the steering angle sensor 5P connector, then recheck. If necessary, replace the steering angle sensor (see page 19-134). ■

### DTC 31, 32, 33, 34, 35, 36, 37, 38: ABS Solenoid

1. Turn the ignition switch ON (II).
2. Chear the DTC with the HDS.
3. Turn the ignition switch OFF, then turn it ON (II) again.
4. Check for DTCs with the HDS.

   *Is DTC 31, 32, 33, 34, 35, 36, 37, and/or 38 indicated?*

   **YES**—Check for loose terminals in the VSA modulator-control unit 46P connector. If necessary, substitute a known-good VSA modulator-control unit (see page 19-137) and retest. ■

   **NO**—Intermittent failure, the system is OK at this time. Check for loose terminals at the VSA modulator-control unit 46P connector. Refer to intermittent failures troubleshooting (see page 19-84). ■



BACK

Protected by AR



## DTC 51: Motor Locked

1. Turn the ignition switch ON (II).
2. Clear the DTC with the HDS.
3. Test-drive the vehicle. Drive the vehicle at 10 mph (15 km/h) or more, and the engine speed is 2500 rpm or more.
4. Check for DTCs with the HDS.

   *Is DTC 51 indicated?*

   **YES**—Check for loose terminals in the VSA modulator-control unit 46P connector. If necessary, substitute a known-good VSA modulator-control unit (see page 19-137) and retest.■

   **NO**—Intermittent failure, the system is OK at this time. Check for loose terminals at the VSA modulator-control unit 46P connector. Refer to intermittent failures troubleshooting (see page 19-84).■

## DTC 52: Motor Stuck OFF

1. Turn the ignition switch OFF.
2. Check the No. 3 (40 A) fuse in the under-hood fuse/relay box.

   *Is the fuse blown?*

   **YES**—Go to step 3.

   **NO**—Reinstall the checked fuse, then go to step 5.
3. Disconnect the VSA modulator-control unit 46P connector.
4. Check for continuity between VSA modulator-control unit 46P connector terminal No. 45 and body ground.

**VSA MODULATOR-CONTROL UNIT 46P CONNECTOR**

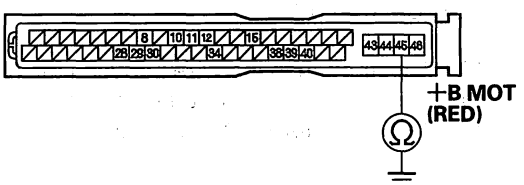


Wire side of female terminals

*Is there continuity?*

**YES**—Repair short to body ground in the wire between the No. 3 (40 A) fuse in the under-hood fuse/relay box and the VSA modulator-control unit.■

**NO**—Install a new No. 3 (40 A) fuse, then go to step 6.

(cont'd)

Protected by AR



## DTC Troubleshooting (cont'd)

5. Disconnect the VSA modulator-control unit 46P connector.

6. Measure the voltage between VSA modulator-control unit 46P connector terminal No. 45 and body ground.

**VSA MODULATOR-CONTROL UNIT 46P CONNECTOR**

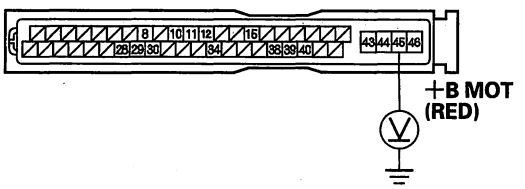


Wire side of female terminals

*Is there battery voltage?*

**YES**—Go to step 7.

**NO**—Repair open in the wire between the No. 3 (40 A) fuse in the under-hood fuse/relay box and the VSA modulator-control unit. ■

7. Reconnect the VSA modulator-control unit 46P connector.

8. Turn the ignition switch ON (II).

9. Clear the DTC with the HDS.

10. Test-drive the vehicle. Drive the vehicle at 10 mph (15 km/h) or more, and the engine speed is 2500 rpm or more.

11. Check for DTCs with the HDS.

*Is DTC 52 indicated?*

**YES**—Check for loose terminals in the VSA modulator-control unit 46P connector. If necessary, substitute a known-good VSA modulator-control unit (see page 19-137) and retest. ■

**NO**—Intermittent failure, the system is OK at this time. Check for loose terminals at the VSA modulator-control unit 46P connector. Refer to intermittent failures troubleshooting (see page 19-84). ■



BACK

Protected by AR



## DTC 53: Motor Stuck ON

1. Turn the ignition switch ON (II).

   *Is the pump motor working?*

   **YES**—Replace the VSA modulator-control unit (see page 19-137).■

   **NO**—Go to step 2.

2. Turn the ignition switch OFF.

3. Disconnect the VSA modulator-control unit 46P connector.

4. Check for continuity between VSA modulator-control unit 46P connector terminal No. 46 and body ground.

**VSA MODULATOR-CONTROL UNIT 46P CONNECTOR**

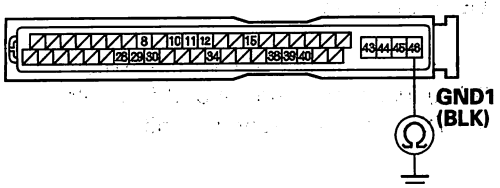


Wire side of female terminals

   *Is there continuity?*

   **YES**—Go to step 5.

   **NO**—Repair open in the wire between the VSA modulator-control unit and body ground (G402).■

5. Reconnect the VSA modulator-control unit 46P connector.

6. Turn the ignition switch ON (II).

7. Clear the DTC with the HDS.

8. Test-drive the vehicle. Drive the vehicle at 10 mph (15 km/h) or more, and the engine speed is 2500 rpm or more.

9. Check for DTCs with the HDS.

   *Is DTC 53 indicated?*

   **YES**—Check for loose terminals in the VSA modulator-control unit 46P connector. If necessary, substitute a known-good VSA modulator-control unit (see page 19-137) and retest.■

   **NO**—Intermittent failure, the system is OK at this time. Check for loose terminals at the VSA modulator-control unit 46P connector. Refer to intermittent failures troubleshooting (see page 19-84).■

Protected by AR



## DTC Troubleshooting (cont'd)

### DTC 54: Valve Relay

1. Turn the ignition switch OFF.
2. Check the No. 3 (20 A) fuse in the under-hood fuse/relay box.

   *Is the fuse blown?*

   **YES**—Go to step 3.

   **NO**—Reinstall the checked fuse, then go to step 5.
3. Disconnect the VSA modulator-control unit 46P connector.
4. Check for continuity between VSA modulator-control unit 46P connector terminal No. 44 and body ground.

**VSA MODULATOR-CONTROL UNIT 46P CONNECTOR**

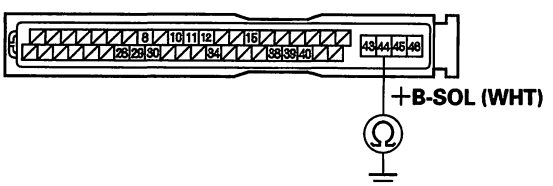


Wire side of female terminals

*Is there continuity?*

**YES**—Repair short to body ground in the wire between the No. 3 (20 A) fuse in the under-hood fuse/relay box and the VSA modulator-control unit. ■

**NO**—Install a new No. 3 (20 A) fuse, then go to step 6.

5. Disconnect the VSA modulator-control unit 46P connector.
6. Measure the voltage between VSA modulator-control unit 46P connector terminal No. 44 and body ground.

**VSA MODULATOR-CONTROL UNIT 46P CONNECTOR**

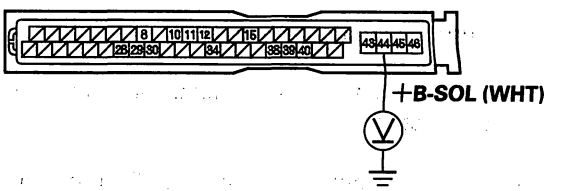


Wire side of female terminals

*Is there battery voltage?*

**YES**—Go to step 7.

**NO**—Repair open in the wire between the No. 3 (20 A) fuse in the under-hood fuse/relay box and the VSA modulator-control unit. ■



BACK

Protected by AR



7. Reconnect the VSA modulator-control unit 46P connector.

8. Turn the ignition switch ON (II).

9. Clear the DTC with the HDS.

10. Turn the ignition switch OFF, then turn it ON (II) again.

11. Check for DTCs with the HDS.

    *Is DTC 54 indicated?*

    **YES**—Check for loose terminals in the VSA modulator-control unit 46P connector. If necessary, substitute a known-good VSA modulator-control unit (see page 19-137) and retest.■

    **NO**—Intermittent failure, the system is OK at this time. Check for loose terminals at the VSA modulator-control unit 46P connector. Refer to intermittent failures troubleshooting (see page 19-84).■

## DTC 61: IG1 Voltage Low

1. Turn the ignition switch ON (II).

2. Clear the DTC with the HDS.

3. Test-drive the vehicle at 2 mph (2 km/h) or more.

4. Check for DTCs with the HDS.

   *Is DTC 61 indicated?*

   **YES**—Go to step 5.

   **NO**—Intermittent failure, the system is OK at this time. Check for loose terminals at the VSA modulator-control unit 46P connector. Refer to intermittent failures troubleshooting (see page 19-84).■

5. Test the battery and check the connections.

   *Is the battery OK?*

   **YES**—Check for a poor connection at the battery terminals, and all IG1 circuit connections between the VSA modulator-control unit 46P connector terminal No. 40 and the under-dash fuse/relay box No. 4 (7.5 A) fuse. If the connections are good, go to the Alternator and Regulator Circuit Troubleshooting (see page 4-28).■

   **NO**—Replace or charge the battery (see page 22-63).■

Protected by AR



## DTC Troubleshooting (cont'd)

### DTC 62: IG1 Voltage High

1. Turn the ignition switch ON (II).
2. Clear the DTC with the HDS.
3. Test-drive the vehicle at 2 mph (2 km/h) or more.
4. Check for DTCs with the HDS.

*Is DTC 62 indicated?*

**YES**—Check for a poor connection at the battery terminals. If the connection are good, go to the Alternator and Regulator Circuit Troubleshooting (see page 4-28).■

**NO**—Intermittent failure, the system is OK at this time. Check for loose terminals at the VSA modulator-control unit 46P connector. Refer to intermittent failures troubleshooting (see page 19-84).■

### DTC 66: VSA Pressure Sensor (Hardware)

1. Turn the ignition switch ON (II).
2. Clear the DTC with the HDS.
3. Turn the ignition switch OFF, then turn it ON (II) again.
4. Check for DTCs with the HDS.

*Is DTC 66 indicated?*

**YES**—Check for loose terminals in the VSA modulator-control unit 46P connector. If necessary, substitute a know-good VSA modulator-control unit (see page 19-137) and retest.■

**NO**—Intermittent failure, the system is OK at this time. Check for loose terminals at the VSA modulator-control unit 46P connector. Refer to intermittent failures troubleshooting (see page 19-84).■



BACK

Protected by AR



## DTC 68: Brake Pedal Position Switch Stuck ON (Hardware)

1. Turn the ignition switch ON (II).

2. Clear for DTCs with the HDS.

   *Is DTC 86 indicated with DTC 68 at the same time?*

   **YES**—Do the DTC 86 troubleshooting (see page 19-117).

   **NO**—Go to step 3.

3. Check the BRAKE SWITCH in the VSA DATA LIST with the HDS while moving the brake pedal.

   *Does it indicate ON when the pedal is pressed, and OFF when pedal is released?*

   **YES**—Go to step 4.

   **NO**—Go to step 7.

4. Clear the DTC with the HDS.

5. Test-drive the vehicle at 10 mph (15 km/h) for 60 seconds or more.

6. Check for DTCs with the HDS.

   *Is DTC 68 indicated?*

   **YES**—Check for loose terminals in the VSA modulator-control unit 46P connector. If necessary, substitute a know-good VSA modulator-control unit (see page 19-137) and retest.■

   **NO**—Intermittent failure, the system is OK at this time. Check for loose terminals at the VSA modulator-control unit 46P connector. Refer to intermittent failures troubleshooting (see page 19-84).■

7. Turn the ignition switch OFF.

8. Disconnect the brake pedal position switch 4P connector.

9. Do the brake pedal position switch test (see page 22-180).

   *Is the switch OK?*

   **YES**—Check the fuel and emissions systems and troubleshoot the brake pedal position switch signal circuit (see page 11-336).■

   **NO**—Replace the brake pedal position switch (see page 19-6).■

Protected by AR



## DTC Troubleshooting (cont'd)

### DTC 81: Central Processing Unit (CPU)

1. Turn the ignition switch ON (II).
2. Clear the DTC with the HDS.
3. Turn the ignition switch OFF, then turn it ON (II) again.
4. Check for DTCs with the HDS.

   *Is DTC 81 indicated?*

   **YES**—Replace the VSA modulator-control unit (see page 19-137).■

   **NO**—Intermittent failure, the system is OK at this time.■

### DTC 83: PCM Communication Error

1. Turn the ignition switch ON (II).
2. Check for DTCs with the HDS.

   *Is DTC 86 indicated with DTC 83 at the same time?*

   **YES**—Do the DTC 86 troubleshooting.■ (see page 19-117)■

   **NO**—Go to step 3.

3. Check for the fuel and emissions system DTCs with the HDS (see page 11-3).

   *Are any DTCs indicated?*

   **YES**—Do the applicable troubleshooting for the PCM.■

   **NO**—Go to step 4.

4. Clear the DTC with the HDS.
5. Turn the ignition switch OFF, then turn it ON (II) again.
6. Check for DTCs with the HDS.

   *Is DTC 83 indicated?*

   **YES**—Check for loose terminals in the VSA modulator-control unit 46P connector. If necessary, substitute a know-good VSA modulator-control unit (see page 19-137) and retest.■

   **NO**—Intermittent failure, system is OK at this time. Check for loose terminals between the PCM connector A (44P), and the VSA modulator-control unit 46P connector. Refer to intermittent failures troubleshooting (see page 19-84).■



BACK

Protected by AR



## DTC 84: Steering Angle Sensor No Center Point Writing

1. Turn the ignition switch ON (II).
2. Check for DTCs with the HDS.

   *Are any fuel and emissions system DTCs indicated with DTC 84 at the same time?*

   **YES**—Troubleshoot fuel and emissions system DTCs, and recheck.■

   **NO**—Go to step 3.
3. Do the steering angle sensor center point writing with the HDS (see page 19-135).
4. Clear the DTC with the HDS.
5. Turn the ignition switch OFF, then turn it ON (II) again.
6. Check for DTCs with the HDS.

   *Is DTC 84 indicated?*

   **YES**—Replace the steering angle sensor (see page 19-134), then do the steering angle sensor center point writing (see page 19-135).■

   **NO**—Intermittent failure, the system is OK at this time. Check for loose terminals between the steering angle sensor 5P connector and the VSA modulator-control unit 46P connector. Refer to intermittent failures troubleshooting (see page 19-84).■

## DTC 86: F-CAN Communication

1. Turn the ignition switch ON (II).
2. Clear the DTC with the HDS.
3. Turn the ignition switch OFF.
4. Start the engine.
5. Wait at least 5 seconds.
6. Check for DTCs with the HDS.

   *Is DTC 86 indicated?*

   **YES**—Go to step 7.

   **NO**—Intermittent failure, the system is OK at this time.■
7. Check for the fuel and emissions system DTCs with the HDS (see page 11-3).

   *Are any DTCs indicated?*

   **YES**—Do the applicable troubleshooting for the PCM.■

   **NO**—Go to step 8.
8. Turn the ignition switch OFF.

(cont'd)

Protected by AR



## DTC Troubleshooting (cont'd)

9. Disconnect the yaw rate-lateral acceleration sensor 4P connector.

10. Turn the ignition switch ON (II).

11. Measure the voltage between yaw rate-lateral acceleration sensor 4P connector terminal No. 1 and body ground.

**YAW RATE-LATERAL ACCELERATION SENSOR 4P CONNECTOR**

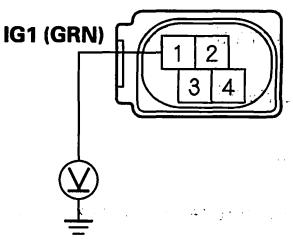


Wire side of female terminals

*Is there battery voltage?*

**YES**—Go to step 12.

**NO**—Repair open in the wire between No. 4 (7.5 A) fuse in the under-dash fuse/relay box and the yaw rate-lateral acceleration sensor. ■

12. Turn the ignition switch OFF.

13. Check for continuity between yaw rate-lateral acceleration sensor 4P connector terminal No. 4 and body ground.

**YAW RATE-LATERAL ACCELERATION SENSOR 4P CONNECTOR**

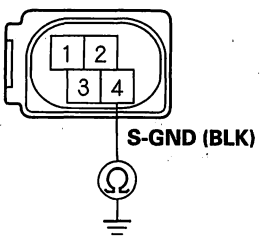


Wire side of female terminals

*Is there continuity?*

**YES**—Go to step 14.

**NO**—Repair open in the wire between the yaw rate-lateral acceleration sensor and body ground (G503). ■



BACK

Protected by AR



14. Check for continuity between DLC terminals No. 6, No. 14 and yaw rate-lateral acceleration sensor 4P connector terminals No. 3, No. 2 individually.

**DATA LINK CONNECTOR (DLC)**
Terminal side of female terminals

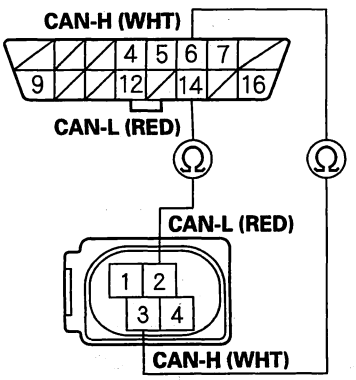


**YAW RATE-LATERAL ACCELERATION SENSOR 4P CONNECTOR**
Wire side of female terminals

*Is there continuity?*

**YES**—Go to step 15.

**NO**—Repair open in the wire between DLC and the yaw rate-lateral acceleration sensor. ■

15. Disconnect the steering angle sensor 5P connector.

16. Turn the ignition switch ON (II).

17. Measure the voltage between steering angle sensor 5P connector terminal No. 5 and body ground.

**STEERING ANGLE SENSOR 5P CONNECTOR**

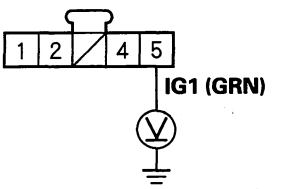


Wire side of female terminals

*Is there battery voltage?*

**YES**—Go to step 18.

**NO**—Repair open in the wire between the No. 4 (7.5 A) fuse in the under-dash fuse/relay box and the steering angle sensor. ■

18. Turn the ignition switch OFF.

(cont'd)

Protected by AR



## DTC Troubleshooting (cont'd)

19. Check for continuity between steering angle sensor 5P connector terminal No. 1 and body ground.

**STEERING ANGLE SENSOR 5P CONNECTOR**

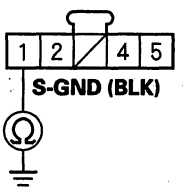


Wire side of female terminals

*Is there continuity?*

**YES**—Go to step 20.

**NO**—Repair open in the wire between the steering angle sensor and body ground (G502).■

20. Check for continuity between DLC terminals No. 6, No. 14 and steering angle sensor 5P connector terminals No. 2, No. 4 individually.

**DATA LINK CONNECTOR (DLC)**
Terminal side of female terminals

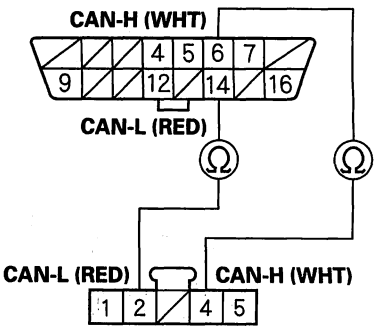


**STEERING ANGLE SENSOR 5P CONNECTOR**
Wire side of female terminals

*Is there continuity?*

**YES**—Go to step 21.

**NO**—Repair open in the wire between DLC and the steering angle sensor.■



BACK

Protected by AR



21. Check for continuity between VSA modulator-control unit 46P connector terminals No. 38, No. 39 and DLC terminals No. 14, No.6 individually.

**VSA MODULATOR-CONTROL UNIT 46P CONNECTOR**
Wire side of female terminals

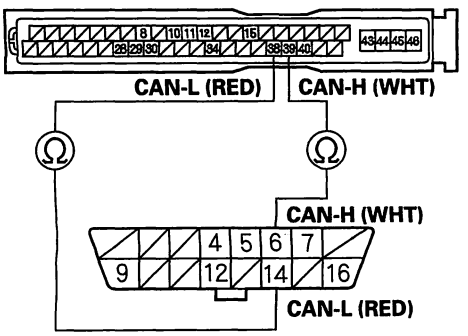


**DATA LINK CONNECTOR (DLC)**
Terminal side of female terminals

*Is there continuity?*

**YES**—Go to step 22.

**NO**—Repair open in the wire between VSA modulator-control unit and DLC. ■

22. Turn the ignition switch ON (II).

23. Clear the DTC with the HDS.

24. Turn the ignition switch OFF.

25. Start the engine.

26. Wait at least 5 seconds.

27. Check for DTCs with the HDS.

*Is DTC 86 indicated?*

**YES**—Replace the VSA modulator-control unit (see page 19-137). ■

**NO**—The system is OK at this time. ■

Protected by AR



## DTC Troubleshooting (cont'd)

### DTC 87: Current Flow into Wheel Sensor Input Amplifier

1. Turn the ignition switch ON (II).
2. Clear the DTC with the HDS.
3. Turn the ignition switch OFF, then turn it ON (II) again.
4. Check for DTCs with the HDS.

   *Is DTC 87 indicated?*

   **YES**—Do the DTC 11, 13, 15, and/or 17 troubleshooting (see page 19-101). ■

   **NO**—Intermittent failure, the system is OK at this time. Check for loose terminals at the VSA modulator-control unit 46P connector. Refer to intermittent failures troubleshooting (see page 19-84). ■

### DTC 88: Difference in Wheel Speed

1. Check the all four tires.

   *Are all four tires the correct size and properly inflated?*

   **YES**—Go to step 2.

   **NO**—Install the correct tires or set the tires to the correct pressure, and retest by test-driving. ■

2. Check the RF, LF, RR, LR, WHEEL SPD in the VSA DATA LIST with the HDS.

   *Are all four the same indicated value?*

   **YES**—Go to step 3.

   **NO**—Reinstall or replace the wheel sensor(s) (see page 19-139), and recheck by test-driving. ■

3. Check the all magnetic encoders on the front wheel bearings (see page 18-12) or magnetic encoders on the rear hub bearing units (see page 18-32).

   *Are they installed correctly and good condition?*

   **YES**—Check for loose terminals in the VSA modulator-control unit 46P connector. If necessary, substitute a known-good VSA modulator-control unit (see page 19-137) and retest. ■

   **NO**—Replace the front wheel bearing(s) or the rear hub bearing unit(s), and recheck by test-driving:

   - Front: Replace the front wheel bearing(s) (see page 18-12). ■
   - Rear: Replace the rear hub bearing unit(s) (see page 18-32). ■



BACK

Protected by AR



## DTC 91: VSA System

1. Check the brake system for leaks or mechanical problems.

   *Is the brake system OK? (no brake fluid leakage, air trapped in the brake system, brake pads worn out)*

   **YES**—Go to step 2.

   **NO**—Repair the brake system, then recheck.■

2. Turn the ignition switch ON (II).

3. Clear the DTC with the HDS.

4. Test-drive the vehicle in a straight line. Accelerate the vehicle up to 6 mph (10 km/h), and stop, then accelerate up to 6 mph (10 km/).

5. Check for DTCs with the HDS.

   *Is DTC 91 indicated?*

   **YES**—Check for loose terminals in the VSA modulator-control unit 46P connector. If necessary, substitute a known-good VSA modulator-control unit (see page 19-137) and retest.■

   **NO**—Intermittent failure, the system is OK at this time. Check for loose terminals at the VSA modulator-control unit 46P connector. Refer to intermittent failures troubleshooting (see page 19-84).

## DTC 113: Yaw Rate-Lateral Acceleration Sensor (Power Supply)

1. Turn the ignition switch OFF.

2. Disconnect the yaw rate-lateral acceleration sensor 4P connector.

3. Turn the ignition switch ON (II).

4. Measure the voltage between body ground and yaw rate-lateral acceleration sensor 4P connector terminal No. 1.

**YAW RATE-LATERAL ACCELERATION SENSOR 4P CONNECTOR**

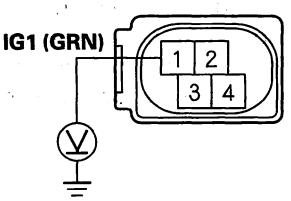


Wire side of female terminals

*Is there battery voltage?*

**YES**—Replace the yaw rate-lateral acceleration sensor (see page 19-135).

**NO**—Repair open in the wire between the No. 4 (7.5 A) fuse in the under-dash fuse/relay box and the yaw rate-lateral acceleration sensor.■

Protected by AR



## DTC Troubleshooting (cont'd)

### DTC 114: Yaw Rate-Lateral Acceleration Sensor Installation Problem

1. Turn the ignition switch ON (II).
2. Clear the DTC with the HDS.
3. Turn the ignition switch OFF, then turn it ON (II) again.
4. Check for DTCs with the HDS.

   *Is DTC 114 indicated?*

   **YES**—Replace the yaw rate-lateral acceleration sensor (see page 19-135).

   **NO**—Intermittent failure, the system is OK at this time. Check for loose terminals at the yaw rate-lateral acceleration sensor 4P connector. Refer to intermittent failures troubleshooting (see page 19-84). ■

### DTC 121, 122, 123, 124: VSA Solenoid

1. Turn the ignition switch ON (II).
2. Clear the DTC with the HDS.
3. Turn the ignition switch OFF, then turn it ON (II) again.
4. Check for DTCs with the HDS.

   *Is DTC 121, 122, 123, and/or 124 indicated?*

   **YES**—Check for loose terminals in the VSA modulator-control unit 46P connector. If necessary, substitute a known-good VSA modulator-control unit (see page 19-137) and retest. ■

   **NO**—Intermittent failure, the system is OK at this time. Check for loose terminals at the VSA modulator-control unit 46P connector. Refer to intermittent failures troubleshooting (see page 19-84). ■



BACK

Protected by AR



## DTC 131: Yaw Rate Sensor (Software)

1. Turn the ignition switch ON.
2. Check for DTCs with the HDS.

   *Is DTC 91 indicated with DTC 131 at the same time?*

   **YES**—Do the DTC 91 troubleshooting (see page 19-123).

   **NO**—Go to step 3.
3. Turn the ignition switch OFF.
4. Check the yaw rate-lateral acceleration sensor is properly mounted (see page 19-135).

   *Is the yaw rate-lateral acceleration sensor installation OK?*

   **YES**—Go to step 5.

   **NO**—Reinstall the yaw rate-lateral acceleration sensor, and recheck by test-driving. ■
5. Put the vehicle on a level surface.
6. Turn the ignition switch ON (II).
7. Check the YAW RATE S in the VSA DATA LIST with the HDS.

   *Is the indicated value within ±5°/s?*

   **YES**—Go to step 8.

   **NO**—Replace the yaw rate-lateral acceleration sensor (see page 19-135).
8. Clear the DTC with the HDS.
9. Test-drive the vehicle around a number of corners.
10. Check for DTCs with the HDS.

    *Is DTC 131 indicated?*

    **YES**—Go to step 11.

    **NO**—Intermittent failure; the most probable cause is that the vehicle has been driven on an extremely canted road. The system is OK at this time. ■
11. Turn the ignition switch OFF.
12. Substitute a known-good yaw rate-lateral acceleration sensor (see page 19-135).
13. Turn the ignition switch ON (II) .
14. Clear the DTC with the HDS.
15. Test-drive the vehicle around a number of corners.
16. Check for DTCs with the HDS.

    *Is DTC 131 indicated?*

    **YES**—Check for loose terminal in the VSA modulator-control unit 46P connector. If necessary, substitute a known-good VSA modulator-control unit (see page 19-137) and retest. ■

    **NO**—Replace the original yaw rate-lateral acceleration sensor (see page 19-135). ■

Protected by AR



## DTC Troubleshooting (cont'd)

**DTC 132:** Lateral Acceleration Sensor (Software)

**DTC 133:** Lateral Acceleration Sensor (Joint Failure)

1. Turn the ignition switch ON (II).
2. Check for DTCs with the HDS.

   *Is DTC 91 indicated with DTC 132 or 133 at the same time?*

   **YES**—Do the DTC 91 troubleshooting (see page 19-123).■

   **NO**—Go to step 3.
3. Turn the ignition switch OFF.
4. Check the yaw rate-lateral acceleration sensor is properly mounted (see page 19-135).

   *Is the yaw rate-lateral acceleration sensor installation OK?*

   **YES**—Go to step 5.

   **NO**—Reinstall the yaw rate-lateral acceleration sensor, and recheck by test-driving.■
5. Put the vehicle on a level surface.
6. Turn the ignition switch ON (II).
7. Check the LATERAL ACCELERATION SENSOR in the VSA DATA LIST with the HDS.

   *Is it indicated within ± 1 m/s?*

   **YES**—Go to step 8.

   **NO**—Replace the yaw rate-lateral acceleration sensor (see page 19-135).■
8. Clear the DTC with the HDS.
9. Test-drive the vehicle around a number of corners.
10. Check for DTCs with the HDS.

    *Is DTC 132 or 133 indicated?*

    **YES**—Go to step 11.

    **NO**—Intermittent failure; the most probable cause is that the vehicle has been driven on an extremely canted road. The system is OK at this time.■
11. Turn the ignition switch OFF.
12. Substitute a known-good yaw rate-lateral acceleration sensor (see page 19-135).
13. Turn the ignition switch ON (II).
14. Clear the DTC with the HDS.
15. Test-drive the vehicle around a number of corners.
16. Check for DTCs with the HDS.

    *Is DTC 132 or 133 indicated?*

    **YES**—Check for loose terminals in the VSA modulator-control unit 46P connector. If necessary, substitute a known-good VSA modulator-control unit (see page 19-137) and retest.

    **NO**—Replace the original yaw rate-lateral acceleration sensor (see page 19-135).■



BACK

Protected by AR



## DTC 134: Steering Angle Sensor (Software)

1. Turn the ignition switch ON (II).

2. Check for DTCs with the HDS.

   *Is DTC 86 indicated with DTC 134 at the same time?*

   **YES**—Do the DTC 86 troubleshooting (see page 19-117). ■

   **NO**—Go to step 3.

3. Put the vehicle on a level surface, and center the steering wheel spokes.

4. Check STEERING ANGLE in the VSA DATA LIST with the HDS.

   *With steering wheel in the straight ahead position, is STEERING ANGLE within ± 5°?*

   **YES**—Go to step 5.

   **NO**—Check for installation of the steering angle sensor. If installation is good, do the steering angle sensor center point writing (see page 19-135). ■

5. Check the wheel alignment (see page 18-5).

   *Is the wheel alignment within the specification?*

   **YES**—Go to step 6.

   **NO**—Make sure the suspension is not modified, and adjust the wheel alignment correctly, and recheck by test-driving. ■

6. Turn the ignition switch ON (II).

7. Clear the DTCs with the HDS.

8. Test-drive the vehicle around a number of corners.

9. Check for DTCs with the HDS.

   *Is DTC 134 indicated?*

   **YES**—Replace the VSA modulator-control unit (see page 19-137). ■

   **NO**— The system is OK at this time. ■

Protected by AR



## DTC Troubleshooting (cont'd)

### DTC 137: VSA Pressure Sensor (Software)

1. Turn the ignition switch OFF (II).
2. Disconnect the brake pedal position switch 4P connector.
3. Do the brake pedal position switch test (see page 22-180).

   *Is the switch OK?*

   **YES**—Go to step 4.

   **NO**—Replace the brake pedal position switch (see page 19-6). ■
4. Short the SCS line with the HDS.
5. Disconnect the PCM connector A (44P).
6. Turn the ignition switch ON (II).
7. Measure the voltage between PCM connector A (44P) terminal No. 40 and body ground.

**PCM CONNECTOR A (44P)**

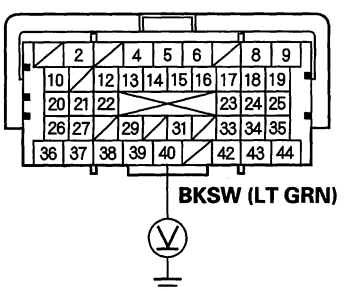


Terminal side of female terminals

*Is there battery voltage when the brake pedal released?*

**YES**—Repair short to power in the wire between the brake pedal position switch and the PCM. ■

**NO**—Go to step 8.

8. Turn the ignition switch OFF.
9. Substitute a known-good PCM (see page 11-8).
10. Turn the ignition switch ON (II).
11. Clear the DTCs with the HDS.
12. Test-drive the vehicle at 8 mph (12 km/h) for 60 seconds or more.
13. Check for DTCs with the HDS.

    *Is DTC 137 indicated?*

    **YES**—Check for loose terminals in the VSA modulator-control unit 46P connector. If necessary, substitute a known-good VSA modulator-control unit (see page 19-137) and retest. ■

    **NO**—Replace the original PCM (see page 11-252). ■



BACK

Protected by AR



## DTC 138: Brake Pedal Position Switch Stuck OFF (Software)

1. Turn the ignition switch OFF.

2. Check the No. 12 (15 A) fuse in the under-hood fuse/relay box.

   *Is the fuse OK?*

   **YES**—Reinstall the fuse, and go to step 3.

   **NO**—Replace the fuse, and recheck. If the fuse is blown, check for a short to body ground in the fuse circuit. ■

3. Disconnect the brake pedal position switch 4P connector.

4. Measure the voltage between brake pedal position switch 4P connector terminal No. 1 and body ground.

**BRAKE PEDAL POSITION SWITCH 4P CONNECTOR**

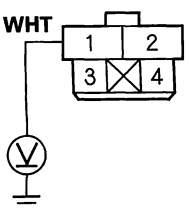


Wire side of female terminals

*Is there battery voltage?*

**YES**—Go to step 5.

**NO**—Repair open in the wire between the No. 12 (15 A) fuse in the under-hood fuse/relay box and the brake pedal position switch. ■

5. Short the SCS line with the HDS.

6. Disconnect the PCM connector A (44P).

7. Check for continuity between brake pedal position switch 4P connector terminal No. 2 and PCM connector A (44P) terminal No. 40.

**PCM CONNECTOR A (44P)**
Terminal side of female terminals

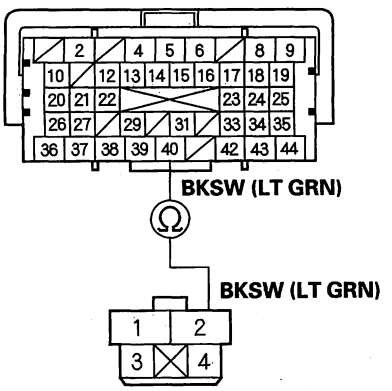


**BRAKE PEDAL POSITION SWITCH 4P CONNECTOR**
Wire side of female terminals

*Is there continuity?*

**YES**—Go to step 8.

**NO**—Repair open in the wire between the PCM and the brake pedal position switch. ■

(cont'd)

Protected by AR



## DTC Troubleshooting (cont'd)

8. Do the brake pedal position switch test (see page 22-180).

   *Is the switch OK?*

   **YES**—Go to step 9.

   **NO**—Replace the brake pedal position switch (see page 19-35).

9. Substitute a known-good PCM (see page 11-8).

10. Start the engine, then press the brake pedal slowly and hard.

11. Check for DTCs with the HDS.

    *Is DTC 138 indicated?*

    **YES**—Check for loose terminals in the VSA modulator-control unit 46P connector. If necessary, substitute a known-good VSA modulator-control unit (see page 19-137) and retest.■

    **NO**—Replace the original PCM (see page 11-252).■



BACK

Protected by AR



# Symptom Troubleshooting

## VSA activation indicator does not go off, and no DTCs are stored

1. Turn the ignition switch ON (II), and watch the VSA activation indicator.

   *Does VSA activation indicator go off within 2 seconds?*

   **YES**—The system is OK at this time. ■

   **NO**—Go to step 2.

2. Turn the ignition switch OFF.

3. Disconnect the VSA OFF switch 5P connector.

4. Check the VSA OFF switch (see page 19-136).

   *Is the VSA OFF switch OK?*

   **YES**—Go to step 5.

   **NO**—Replace the VSA OFF switch (see page 19-136).

5. Remove the gauge control module (see page 22-284).

6. Disconnect the gauge control module (36P) connector.

7. Check for continuity between VSA OFF switch 5P connector terminal No. 2 and body ground.

**VSA OFF SWITCH 5P CONNECTOR**

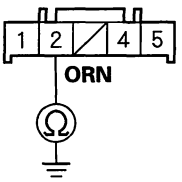


Wire side of female terminals

*Is there continuity?*

**YES**—Repair short to body ground between the gauge control module and the VSA OFF switch. ■

**NO**—Substitute a known-good gauge control module, then go to step 1 and recheck. If it is OK, replace the original gauge control module (see page 22-284).

Protected by AR



## Symptom Troubleshooting (cont'd)

### ABS indicator, brake system indicator, and VSA indicator do not go off at the same time

1. Turn the ignition switch OFF.

2. Check the No. 4 (7.5 A) fuse in the under-dash fuse/relay box.

   *Is the fuse blown?*

   **YES**—Install a new No. 4 (7.5 A) fuse, and recheck.■

   **NO**—Reinstall the checked fuse, then go to step 3.

3. Disconnect the VSA modulator-control unit 46P connector.

4. Turn the ignition switch ON (II).

5. Measure the voltage between VSA modulator-control unit 46P connector terminal No. 40 and body ground.

**VSA MODULATOR-CONTROL UNIT 46P CONNECTOR**

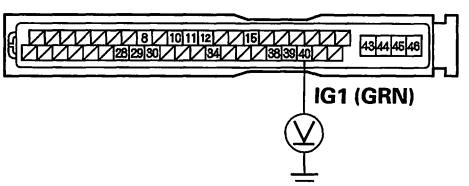


Wire side of female terminals

   *Is there battery voltage?*

   **YES**—Go to step 6.

   **NO**—Repair open in the wire between the No. 4 (7.5 A) fuse in the under-dash fuse/relay box and the VSA modulator-control unit.■

6. Turn the ignition switch OFF.

7. Check for continuity between VSA modulator-control unit 46P connector terminal No. 43 and body ground.

**VSA MODULATOR-CONTROL UNIT 46P CONNECTOR**

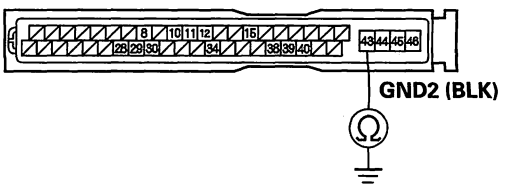


Wire side of female terminals

   *Is there continuity?*

   **YES**—Go to step 8.

   **NO**—Repair open in the wire between the VSA modulator-control unit and body ground (G402).■

8. Disconnect the gauge control module 36P connector.



BACK

Protected by AR



9. Check for continuity between VSA modulator-control unit 46P connector terminal No. 38, No. 39 and gauge control module 36P connector No. 29, No. 28 individually.

**VSA MODULATOR-CONTROL UNIT 46P CONNECTOR**
Wire side of female terminals

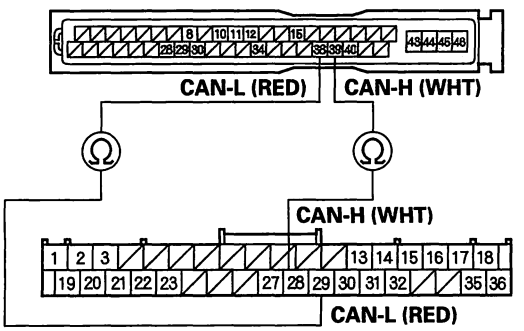


**GAUGE CONTROL MODULE 36P CONNECTOR**
Wire side of female terminals

*Is there continuity?*

**YES**—Check for loose terminals in the VSA modulator-control unit 46P connector. If necessary, substitute a known-good VSA modulator-control unit (see page 19-137) and retest. ■

**NO**—Repair open in the wire between the gauge control module and the VSA modulator-control unit. ■

Protected by AR



## Steering Angle Sensor Replacement

NOTE: Do not damage or drop the combination switch as the steering angle sensor is sensitive to shock and vibration.

1. Remove the steering wheel (see page 17-22) and steering column cover (see page 20-107).
2. Remove the combination switch assembly (see page 17-25).
3. Remove the cable reel (see page 24-158).
4. Remove the combination light switch (A) and the wiper/washer switch (B).

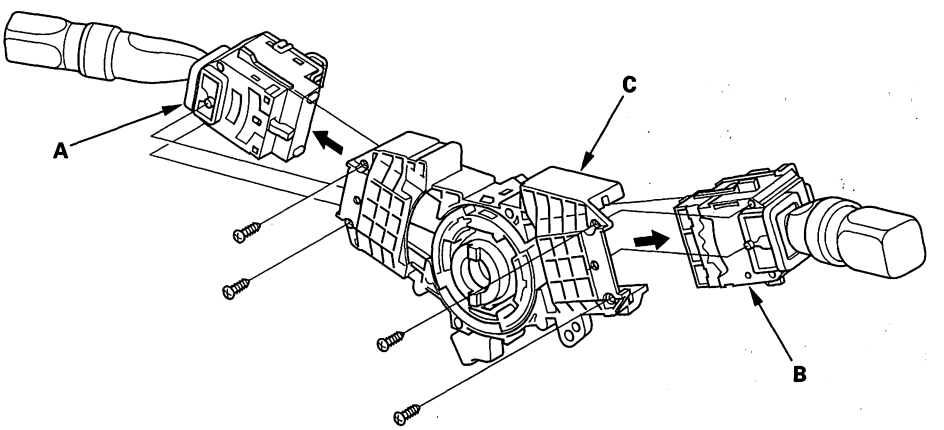


5. Replace the combination switch body complete (C).
6. Install the combination switch in the reverse order of removal.

   NOTE: Do not remove the steering angle sensor from the combination switch body.
7. After installation, do the steering angle sensor center point writing (see page 19-135).



BACK

Protected by AR



## Steering Angle Sensor Center Point Writing

NOTE: Before doing the steering angle sensor center point writing, park the vehicle on a flat level surface, and turn the steering wheel to the straight ahead position while moving the vehicle.

1. With the ignition switch OFF, connect the HDS to the date link connector (DLC) (A) under the driver's side of the dashboard.

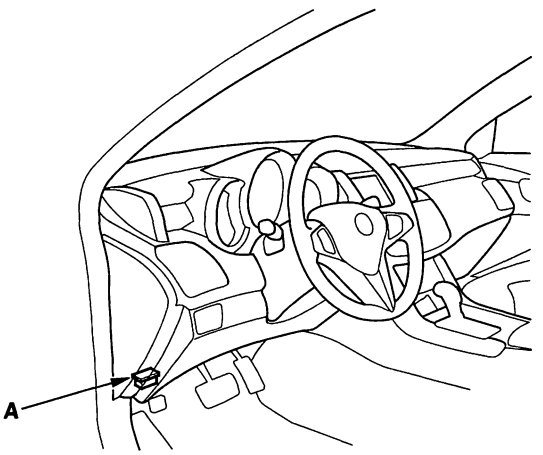


2. Turn the ignition switch ON (II).
3. Make sure the HDS communicates with the vehicle and the VSA modulator-control unit. If it doesn't, troubleshoot the DLC circuit (see page 11-229).
4. Do the steering angle sensor center point writing in the VSA ADJUSTMENT with the HDS.

   NOTE: See the HDS Help menu for specific instructions.
5. Turn the ignition OFF.
6. Verity DTC 84 clears and does not return. If DTC 84 is indicated, do the appropriate troubleshooting.

## Yaw Rate-Lateral Acceleration Sensor Replacement

NOTE:
- Do not damage or drop the sensor as it is sensitive.
- Do not use air or electric impact tools.

1. Make sure the ignition switch is OFF.
2. Remove the center console (see page 20-95).
3. Disconnect the yaw rate-lateral acceleration sensor 4P connector (A).

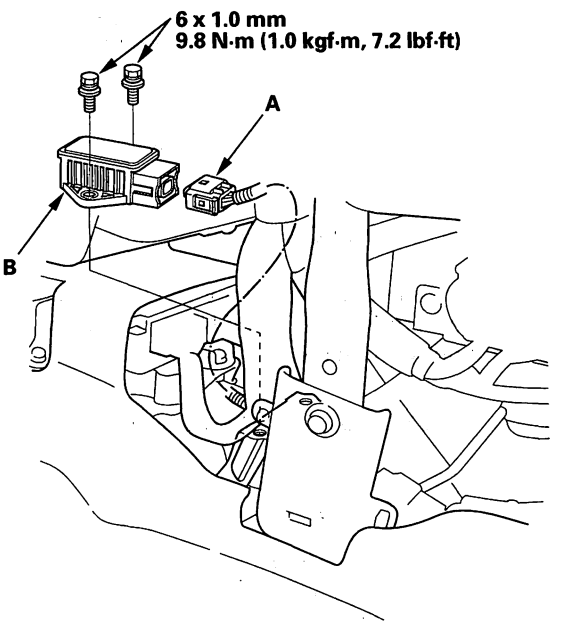


4. Remove the sensor mounting bolts, and remove the yaw rate-lateral acceleration sensor (B).
5. Install in the reverse order of removal.

Protected by AR



## VSA Off Switch Test

1. Make sure the ignition switch is OFF.
2. Remove the VSA OFF switch (A) from the switch panel.

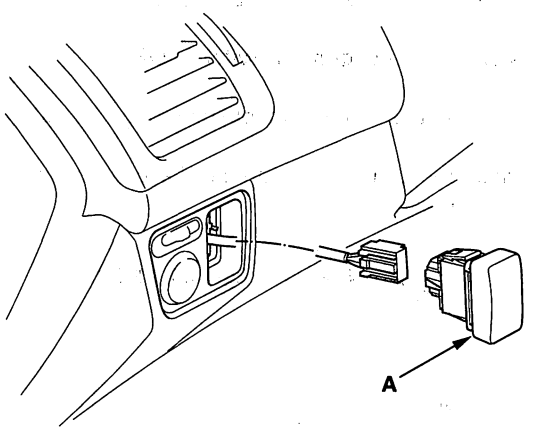


3. Disconnect the VSA OFF switch 5P connector.
4. Check for continuity between VSA OFF switch 5P connector terminal No. 1 and No. 2. There should be continuity when the switch is pushed.

**VSA OFF SWITCH 5P CONNECTOR**

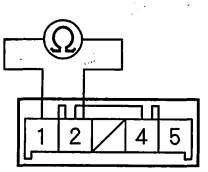


Terminal side of male terminals

5. Check for continuity between VSA OFF switch 5P connector terminal No. 4 and No. 5. There should be continuity at all times.

**VSA OFF SWITCH 5P CONNECTOR**

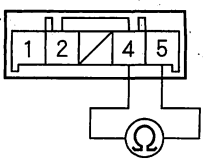


Terminal side of male terminals



BACK

Protected by AR



# VSA Modulator-Control Unit Removal and Installation

NOTE:
- Do not spill brake fluid on the vehicle; it may damage the paint; if brake fluid gets on the paint, wash it off immediately with water.
- Be careful not to damage or deform the brake lines during removal and installation.
- To prevent the brake fluid from flowing, plug and cover the hose ends and joints with a shop towel or equivalent material.

## Removal

1. Make sure the ignition switch is OFF.

2. Disconnect the VSA modulator-control unit 46P connector (A) by pulling up the lock (B); the connector disconnects itself.

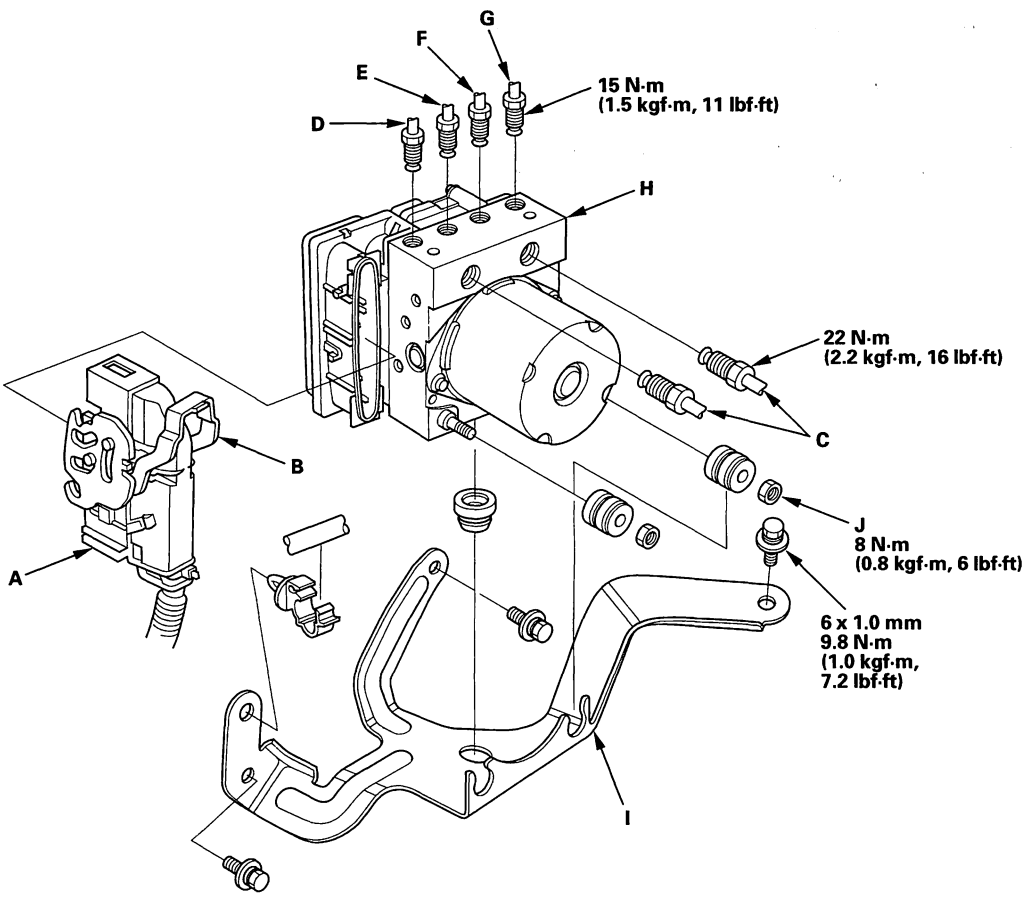


3. Disconnect the six brake lines from the VSA modulator-control unit.

   NOTE: Brake lines are connected to the master cylinder (C) and to the right-front (D), the left-rear (E), the right-rear (F) and the left-front (G) brake systems.

4. Remove the VSA modulator-control unit (H) with the bracket (I) from the body.

5. Remove the locknuts (J), then remove the VSA modulator-control unit from the bracket.

(cont'd)

Protected by AR



## VSA Modulator-Control Unit Removal and Installation (cont'd)

### Installation

1. Install the VSA modulator-control unit on the bracket, then install the new locknuts.
2. Install the bracket with the VSA modulator-control unit.
3. Reconnect the six brake lines, then tighten the flare nuts to the specified torque.
4. Align the connecting surface of the VSA modulator-control unit 46P connector to the VSA modulator-control unit.
5. Lower the lock of the VSA modulator-control unit 46P connector, then confirm the connector is fully seated.
6. Bleed the brake system (see page 19-9).
7. Start the engine, and check that the ABS and the VSA indicators go off.
8. Test-drive the vehicle, and check that the ABS, and the VSA indicators do not come on.

   NOTE: If the brake pedal is spongy, there may be air trapped in the modulator and then induced into the normal brake system during modulation. Bleed the brake system again, (see page 19-9).



BACK

Protected by AR



# Wheel Sensor Replacement

## Front

1. Make sure the ignition switch is OFF.
2. Release the connector holding clamps (A), then disconnect the wheel sensor connector (B).

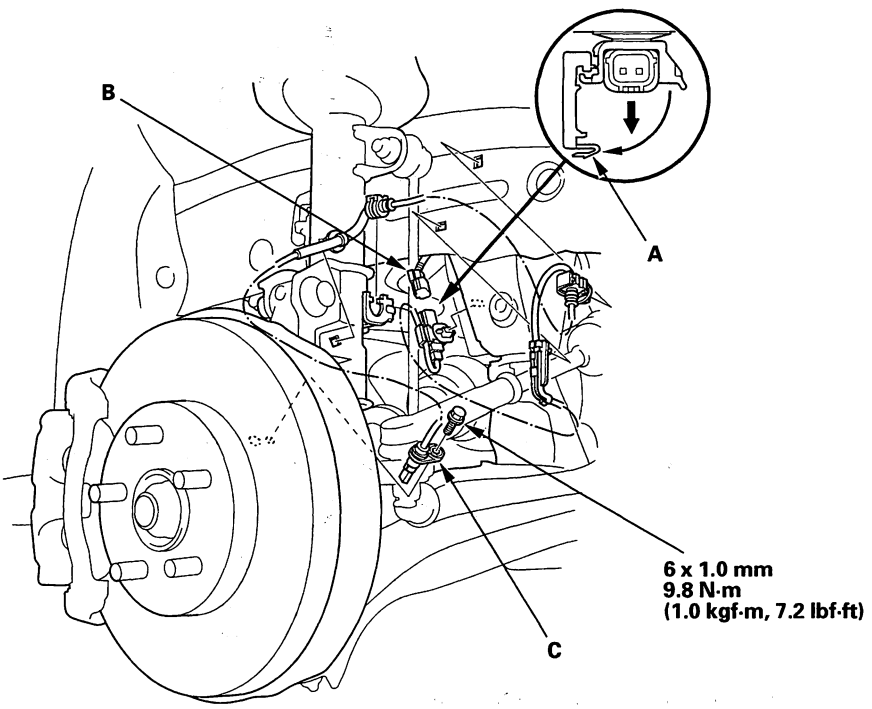


3. Remove the clips, the bolt and the wheel sensor (C).
4. Install the wheel sensor in the reverse order of removal, and note these items:
   - Install the sensor carefully to avoid twisting the wires.
   - If the wheel sensor comes in contact with the wheel bearing, it is faulty.
5. Start the engine, and check that the ABS and the VSA indicators go off.
6. Test-drive the vehicle, and check that the ABS and the VSA indicators do not come on.

(cont'd)

Protected by AR



## Wheel Sensor Replacement (cont'd)

### Rear

1. Make sure the ignition switch is OFF.
2. Disconnect the wheel sensor connector (A).

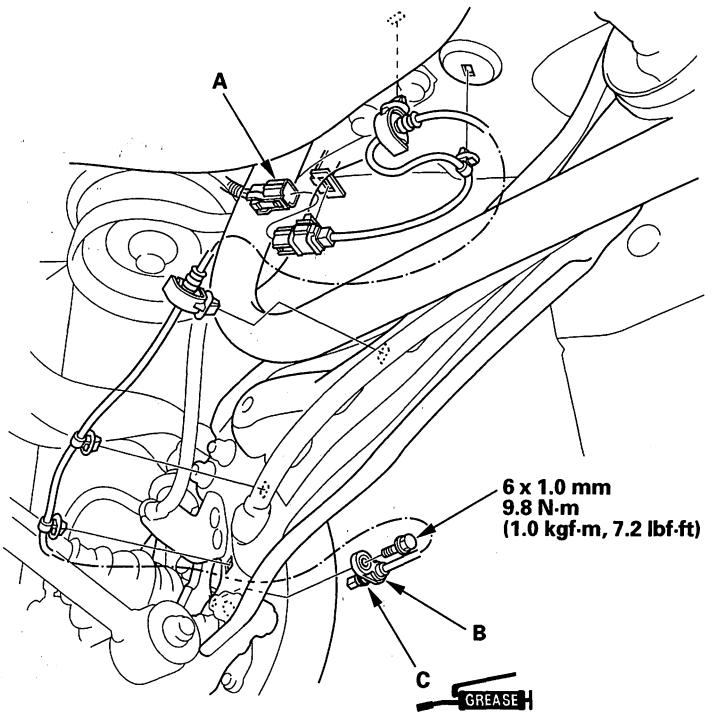


3. Remove the clips, the bolt and the wheel sensor (B).
4. Install the wheel sensor in the reverse order of removal, and note these items:
   - Apply multipurpose grease to the O-ring (C).
   - Install the sensor carefully to avoid twisting the wires.
   - If the wheel sensor comes in contact with the hub bearing unit, it is faulty.
5. Start the engine, and check that the ABS and the VSA indicators go off.
6. Test-drive the vehicle, and check that the ABS and the VSA indicators do not come on.



BACK

Protected by AR

## SUPPLEMENTAL RESTRAINT SYSTEM (SRS) (If body maintenance is required)

The RDX SRS includes a driver's airbag in the steering wheel hub, a passenger's airbag in the dashboard above the glove box, seat belt tensioners in the front seat belt retractors, driver's seat belt buckle tensioner in the driver's seat belt lower anchor, front passenger's seat belt buckle tensioners in the front passenger's seat belt lower anchor, side curtain airbags in the sides of the roof, and side airbags in the front seat-backs. Information necessary to safely service the SRS is included in this Service Manual. Items marked with an asterisk ( * ) on the contents page include or are located near SRS components. Servicing, disassembling, or replacing these items require special precautions and tools, and should be done only by an authorized Acura dealer.

- To avoid rendering the SRS inoperative, which could lead to personal injury or death in the event of a severe frontal or side collision, all SRS service work must be performed by an authorized Acura dealer.
- Improper service procedures, including incorrect removal and installation of the SRS, could lead to personal injury caused by unintentional deployment of the airbags and/or side airbags.
- Do not bump or impact the SRS unit, front impact sensors, or side impact sensors when the ignition switch is ON (II), or for at least 3 minutes after the ignition switch is turned OFF; otherwise, the system may fail in a collision, or the airbags may deploy.
- SRS electrical connectors are identified by yellow color coding. Related components are located in the steering column, front console, dashboard, dashboard lower panel, in the dashboard above the glove box, in the front seats, in the roof side, and around the floor. Do not use electrical test equipment on these circuits.

BACK

Protected by AR

# Body

## Doors


Component Location Index-Front Door .... 20-2
Component Location Index-Rear Door ..... 20-4
Front Door Panel Removal/Installation ..... 20-6
Front Door Outer Handle Replacement .... 20-8
Front Door Latch Replacement ..... 20-11
Front Door Glass and Regulator Replacement ..... 20-13
Front Door Sash Inner Trim Replacement ..... 20-14
Outer Corner Front Door Trim Replacement ..... 20-15
Front Door Glass Outer Weatherstrip Replacement ..... 20-15
Lower Front Door Sill Seal Replacement ..... 20-16
Front Door Weatherstrip Replacement ..... 20-16
Rear Door Panel Removal/Installation ..... 20-17
Rear Door Outer Handle Replacement ..... 20-19
Rear Door Latch Replacement ..... 20-21
Rear Door Glass and Regulator Replacement ..... 20-23
Rear Door Sash Inner Trim Replacement ..... 20-25
Rear Door Rear Sash Trim Replacement ..... 20-26
Rear Door Glass Outer Weatherstrip Replacement ..... 20-26
Lower Rear Door Sill Seal Replacement ..... 20-27
Rear Door Weatherstrip Replacement ..... 20-27
Front and Rear Door Glass Adjustment ... 20-28
Front and Rear Door Position Adjustment ..... 20-29
Front and Rear Door Striker Adjustment ..... 20-30


## Mirrors


Component Location Index ..... 20-31
Power Mirror Replacement ..... 20-32
Mirror Holder Replacement ..... 20-33
Rearview Mirror Replacement ..... 20-34


## Glass


Component Location Index ..... 20-35
Windshield Replacement ..... 20-37
Rear Window Replacement ..... 20-42
Quarter Glass Replacement ..... 20-47


## Moonroof


Component Location Index ..... 20-53
Symptom Troubleshooting Index ..... 20-54
Glass Height Adjustment ..... 20-55
Glass Replacement ..... 20-55
Wind Deflector Replacement ..... 20-56
Drain Channel Replacement ..... 20-57
Sunshade Replacement ..... 20-58
Motor Replacement ..... 20-59
* Frame and Drain Tube Replacement ..... 20-60
Drain Channel Slider and Cable Assembly Replacement ..... 20-62
Closing Force and Opening Drag Check ... 20-64


## Interior Trim


Component Location Index ..... 20-65
* Trim Removal/Installation-Door Areas ..... 20-66
* Trim Removal/Installation-Pillar Areas ..... 20-69
* Trim Removal/Installation -Rear Side Area ..... 20-76
Trim Removal/Installation-Cargo Area ..... 20-78
Trim Removal/Installation -Tailgate Area ..... 20-80
Sunvisor Removal/Installation ..... 20-82
Grab Handle Removal/Installation ..... 20-83
* Headliner Removal/Installation ..... 20-85
* Carpet Replacement ..... 20-89


## Consoles


* Center Console Removal/Installation ..... 20-92
Center Console Armrest Removal/Installation ..... 20-94
Armrest Lock Replacement ..... 20-94
Center Console Disassembly/Reassembly ..... 20-95
Center Console Beverage Holder Replacement ..... 20-97


## Dashboard


Dashboard Side Trim Removal/Installation ..... 20-98
Left Driver's Dashboard Panel Removal/Installation ..... 20-98
Passenger's Dashboard Trim Panel Removal/Installation ..... 20-99
Right Driver's Dashboard Panel Removal/Installation ..... 20-99
Center Panel Trim Removal/Installation ... 20-100
Instrument Panel Removal/Installation .... 20-100
Center Panel Removal/Installation ..... 20-101
Driver's Dashboard Undercover Removal/Installation ..... 20-102
Driver's Switch Panel Removal/Installation ..... 20-102
Dashboard Side Vent Removal/Installation ..... 20-103
Passenger's Dashboard Undercover Removal/Installation ..... 20-103
Glove Box Removal/Installation ..... 20-104
Glove Box Damper Replacement ..... 20-104
Glove Box Striker Replacement ..... 20-105
Center Upper Dashboard Panel Removal/Installation ..... 20-105
* Upper Dashboard Panel Removal/Installation ..... 20-106
* Column Cover Removal/Installation ..... 20-107
* Dashboard Replacement ..... 20-108
* Dashboard/Steering Hanger Beam Removal/Installation ..... 20-111

Protected by AR

## Seats


Component Location Index ..... 20-116
Front Seat Active Headrest Inspection ..... 20-117
* Front Seat Removal/Installation ..... 20-118
Front Seat Frame Replacement ..... 20-121
* Front Seat-back Cover/Pad Replacement ..... 20-126
* Front Seat Cushion Cover/Pad Replacement ..... 20-131
Rear Seat Armrest Replacement ..... 20-135
Rear Seat Armrest Beverage Holder Replacement ..... 20-136
Rear Seat Removal/Installation ..... 20-137
Rear Seat Cushion Link End Mounting Bracket Replacement ..... 20-138
Rear Seat-back Striker Replacement ..... 20-139
Rear Seat-back Cover/Pad Replacement ..... 20-139
Rear Seat Lock Replacement ..... 20-143
Rear Seat Side Bolster Cover Replacement ..... 20-143
Rear Seat Cushion Cover/Pad Replacement ..... 20-144


## Bumpers


Front Bumper Removal/Installation ..... 20-146
Front Bumper Disassembly/Reassembly ..... 20-148
Upper Front Bumper Grille Replacement ..... 20-149
Lower Front Bumper Grille Replacement ..... 20-149
Rear Bumper Removal/Installation ..... 20-150
Rear Bumper Reflector Replacement ..... 20-152


## Hood


Adjustment ..... 20-153
Hood Seal Replacement ..... 20-154
Hood Insulator Replacement ..... 20-155
Charge Air Cooler Air Duct Removal/Installation ..... 20-155


## Tailgate


Adjustment ..... 20-156
Tailgate Support Strut Replacement ..... 20-157
Tailgate Weatherstrip Replacement ..... 20-158


## Fuel Fill Door


Adjustment ..... 20-159
Fuel Cap Adapter Replacement ..... 20-160


## Exterior Trim


Front Grille Replacement ..... 20-161
Hood Molding Replacement ..... 20-162
Front Fender Trim Replacement ..... 20-162
A-Pillar Corner Trim Replacement ..... 20-163
Cowl Cover Replacement ..... 20-163
Door Molding Replacement ..... 20-165
Lower Front Fender Panel Replacement ..... 20-168
Roof Molding Replacement ..... 20-169
Tailgate Hinge Cover Replacement ..... 20-171
Tailgate Spoiler Trim Replacement ..... 20-172
Rear License Trim Replacement ..... 20-173
Tailgate Lower Trim Replacement ..... 20-174
Emblem/Sticker Replacement ..... 20-175


## Fenderwell


Front Inner Fender Replacement ..... 20-176
Front Splash Shield Replacement ..... 20-177
Front Fender Fairing Replacement ..... 20-178
Fuel Pipe Protector Replacement ..... 20-179
Rear Fender Cover Replacement ..... 20-179
Rear Wheel Arch Protector Replacement ..... 20-180
Rear Door Wheel Arch Seal Replacement ..... 20-180
Rear Strake Replacement ..... 20-181
Rear Air Outlet Replacement ..... 20-181


## Openers


Component Location Index ..... 20-182
Hood Opener Cable Replacement ..... 20-183
Fuel Fill Door Opener Cable Replacement ..... 20-184
Fuel Fill Door Opener Replacement ..... 20-186
Hood Latch Replacement ..... 20-187
Hood Release Handle Replacement ..... 20-188
Tailgate Latch Replacement ..... 20-188


## Frame


Rear Damper Gusset Replacement ..... 20-190
Subframe Replacement ..... 20-191
Frame Repair Chart ..... 20-194

Protected by AR



## Component Location Index - Front Door

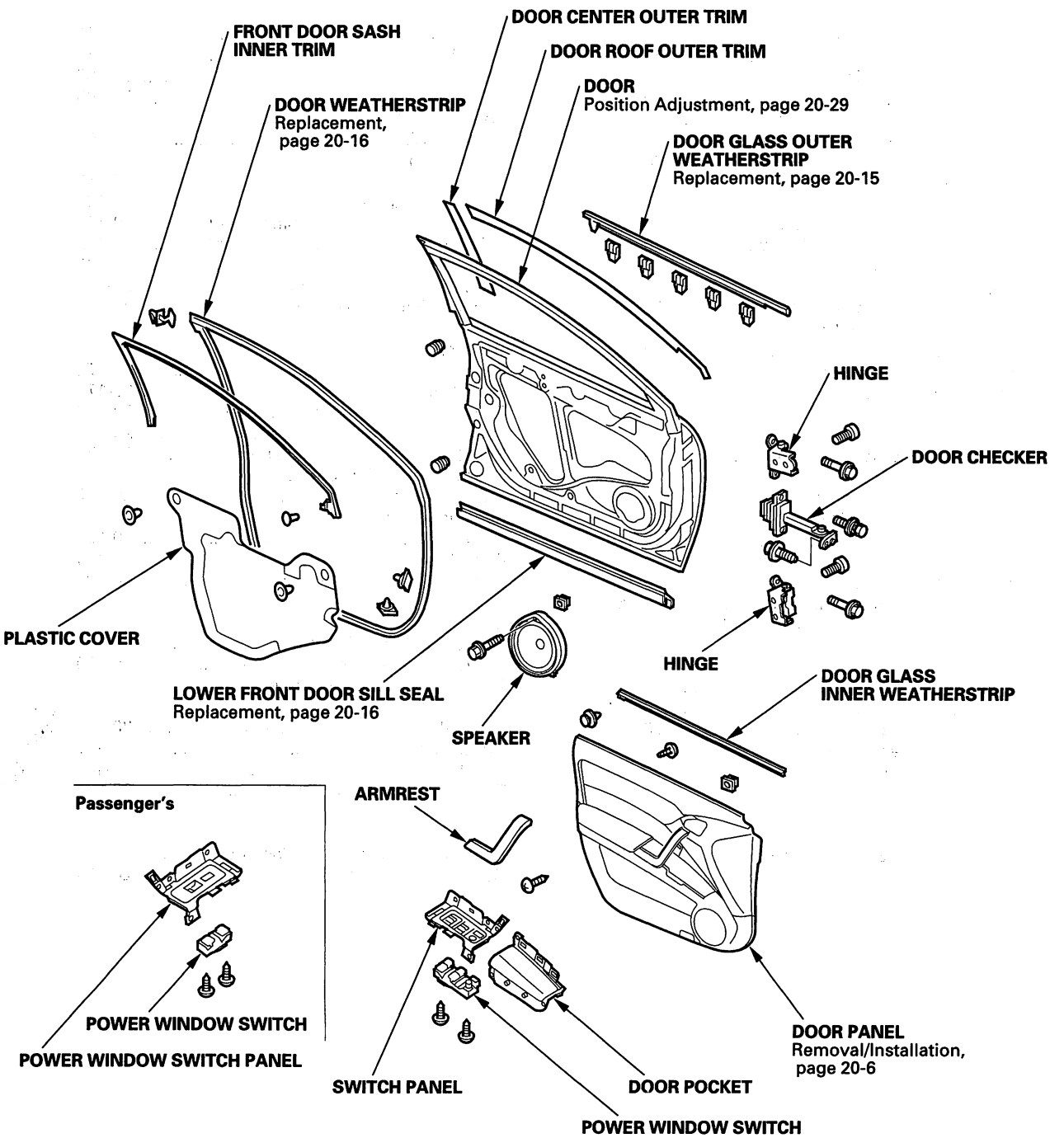




BACK

Protected by AR

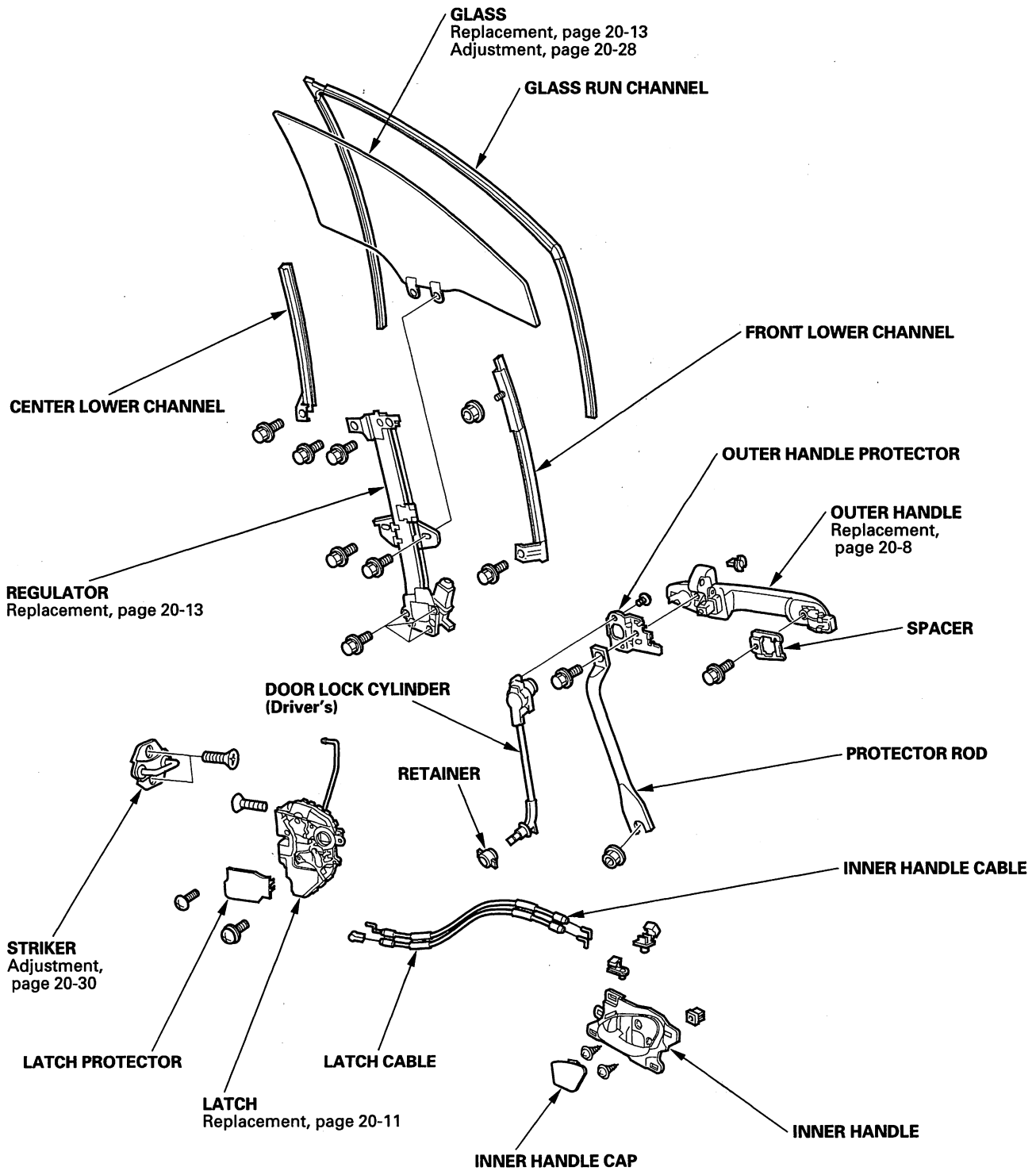

Protected by AR



## Component Location Index - Rear Door

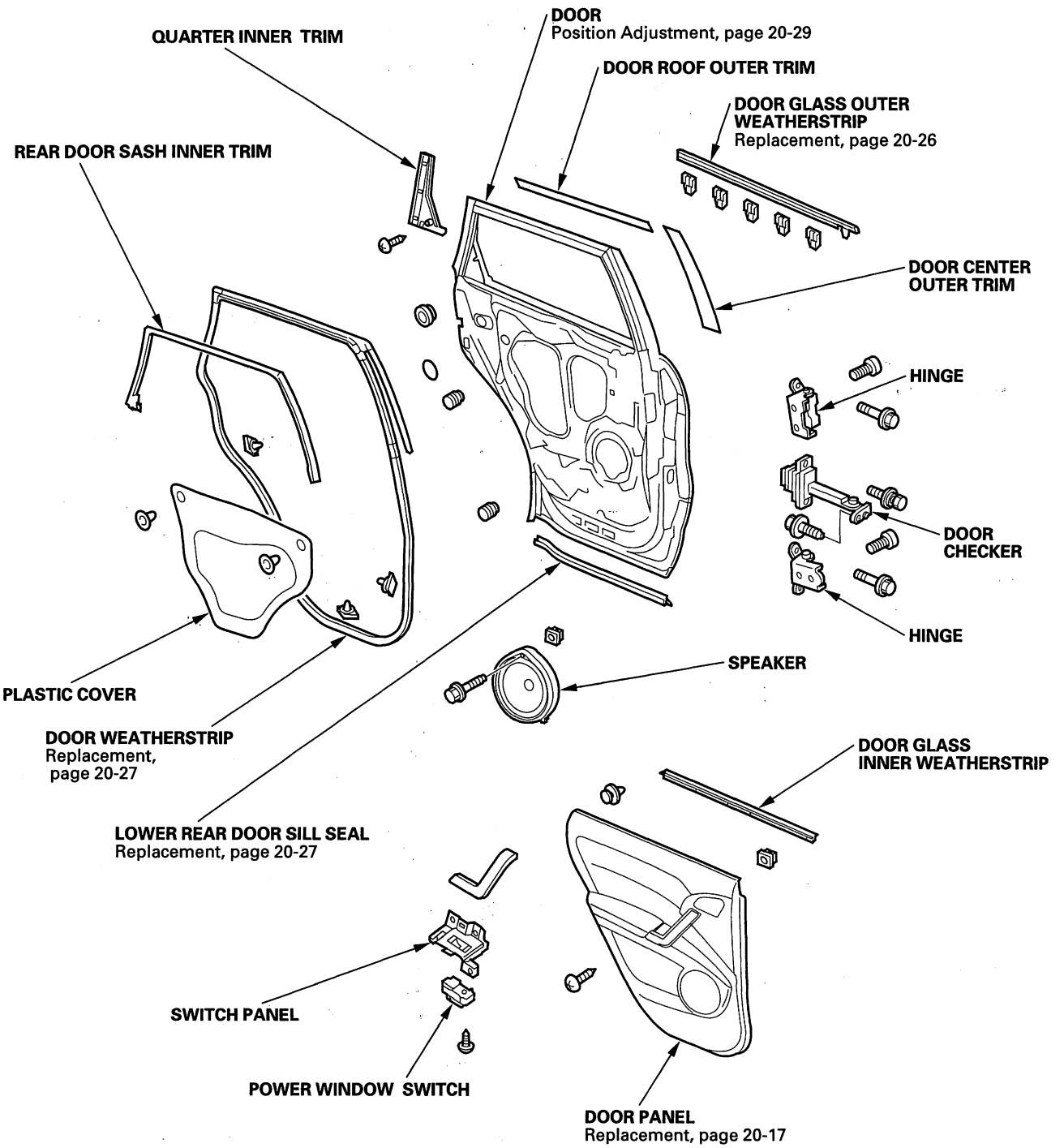




BACK

Protected by AR

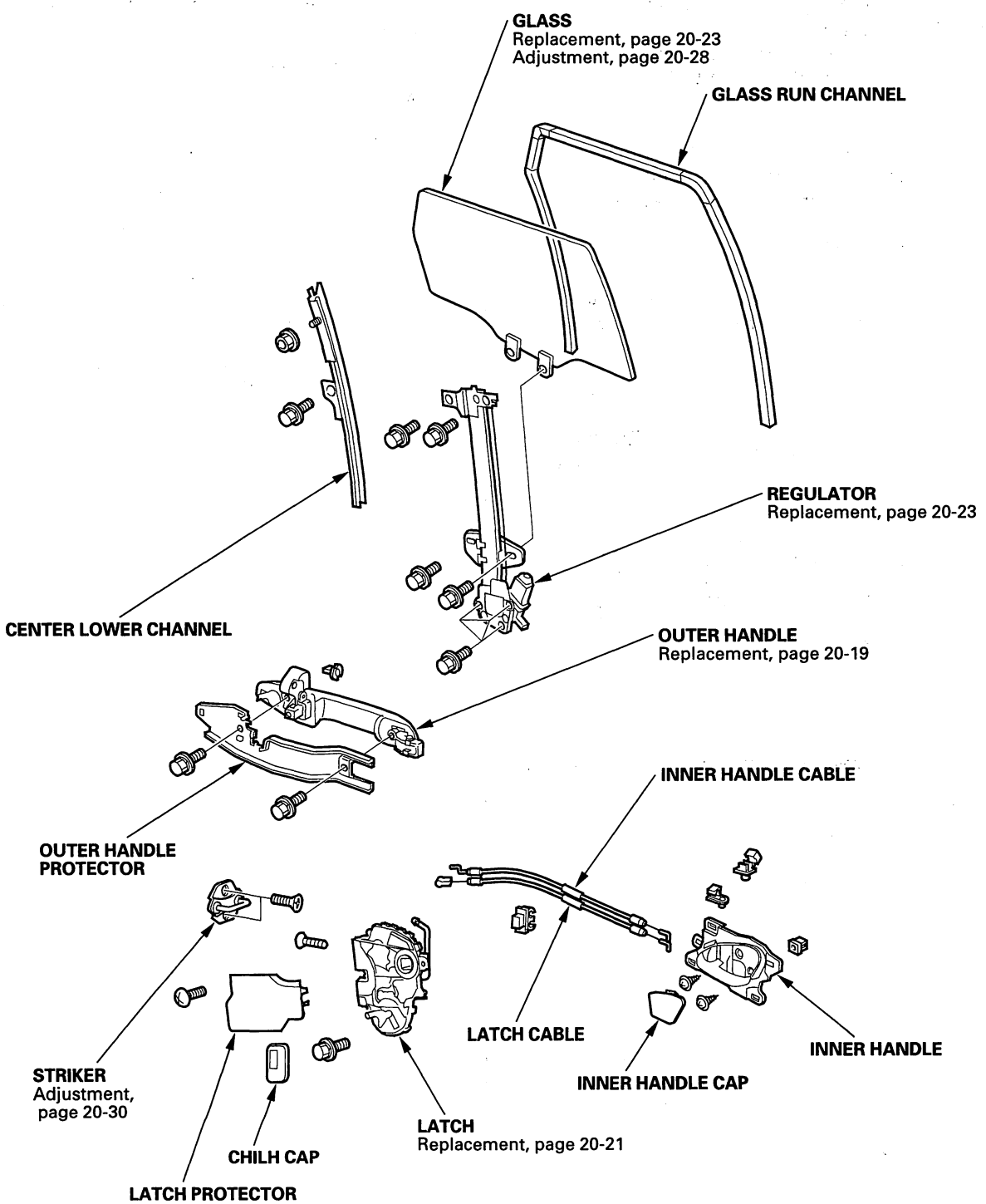

Protected by AR



## Front Door Panel Removal/Installation

**Special Tools Required**
- KTC trim tool set SOJATP2014 *
- Trim pad remover, Snap-on A 177A or equivalent, commercially available

* Available through the American Honda Tool and Equipment Program; call 888-424-6857

NOTE:
- Use the appropriate tool from the KTC trim tool set to avoid damage when prying components.
- Take care not to scratch the door and related parts.

1. Raise the glass fully.

2. Using the appropriate trim tool, pry out on the lower portion of the inner handle cap (A) to release the hooks (B, C).

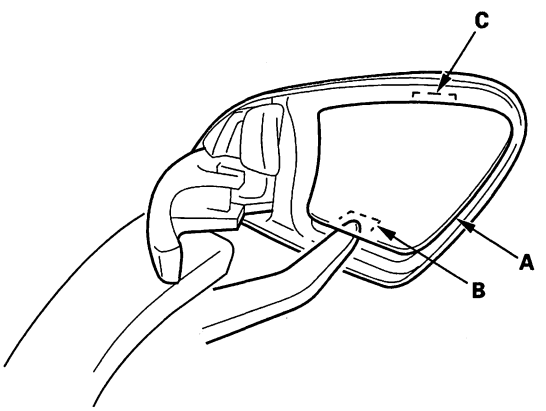


3. Remove the screw (A, B) from the inner handle (C).

**Fastener Locations**

**A ▶ : Screw, 2** **B ▶ : Screw, 1**

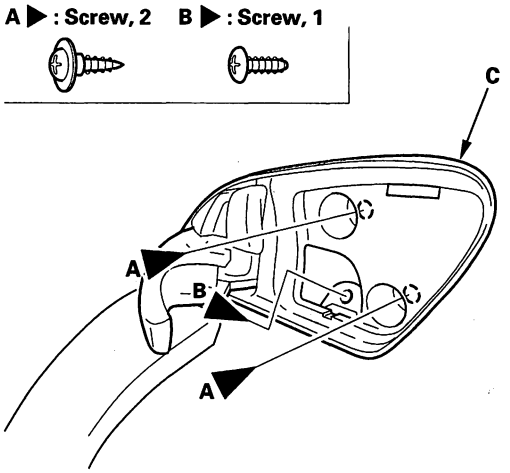


4. Using the appropriate trim tool, pry out on the upper portion of the front door cap (A) to release the hooks (B, C). Then remove the cap and the screw.

**Fastener Location**

**▶ : Screw, 1**

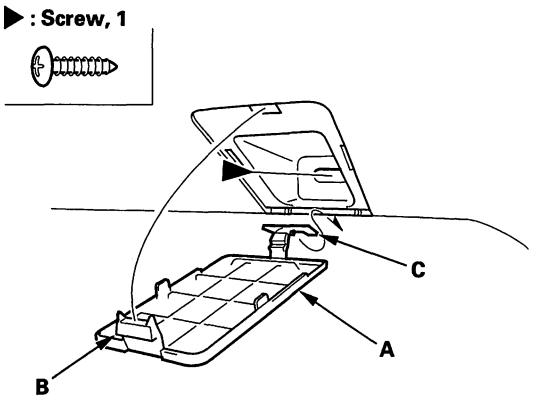




BACK

Protected by AR

5. Remove the front door tweeter (see page 23-103).

6. Remove the door panel (A) with as little bending as possible to avoid creasing or breaking it.

   -1 Start at the bottom edge of the door panel, release the clips with a commercially available trim pad remover.
   -2 Detach the upper clips.
   -3 Starting at the rear, pull the door panel upward.
   -4 Disconnect the power window switch connector.

   NOTE: The inner handle cable and latch cable are connected to the inner handle. Do not pull the door panel up too far, or these cables will be damaged.

**Fastener Locations**

▷ : **Clip, 8**

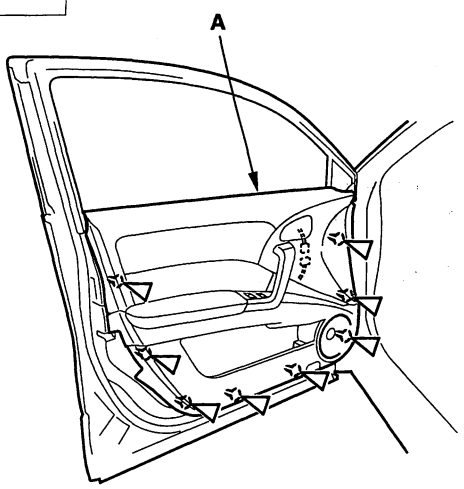


7. While holding the door panel away from the door, remove the inner handle (A) from the door panel by detaching the hooks (B). Remove the door panel.

**Fastener Locations**

▷ : **Clip, 3**

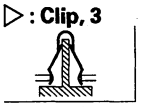

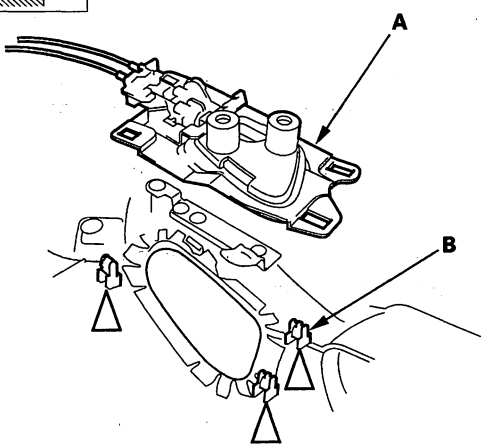


8. If necessary, disconnect the inner handle cable (A) and the latch cable (B) from the inner handle (C), then remove the handle.

   -1 Detach the inner handle cable fastener (D) with a flat-tip screwdriver, then disconnect the inner handle cable from the cable fastener (E).
   -2 Disconnect the latch cable from the cable fastener (F).

   NOTE: Check for damaged or stress-whitened cable fasteners.

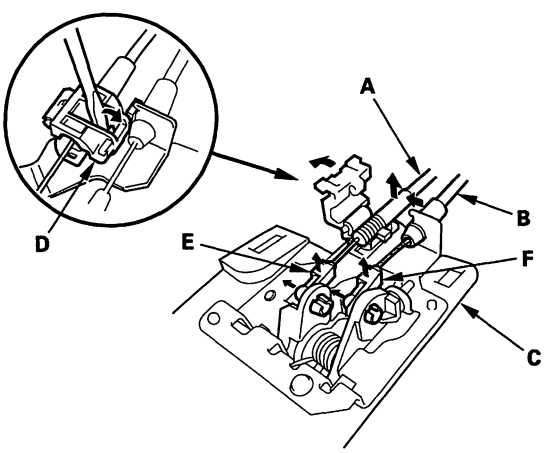


(cont'd)

Protected by AR



## Front Door Panel Removal/ Installation (cont'd)

9. Install the door panel in the reverse order of removal, and note these items:
   - Check if the clips are damaged or stress-whitened, and if necessary, replace them with new ones.
   - Replace any damaged cable fasteners with new ones.
   - The latch cable (A) should be fixed to the cable fastener (B) with the latch in lock position as shown.
   - Make sure the power window switch connector is plugged in properly, and the cable is connected securely.
   - Make sure the window and power door lock operate properly.

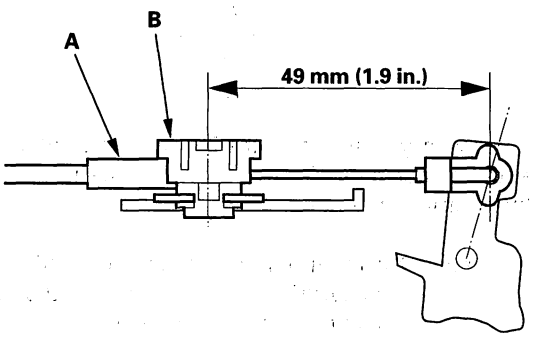


## Front Door Outer Handle Replacement

NOTE: Put on gloves to protect your hands.

1. Raise the glass fully.
2. Remove the door panel (see page 20-6).
3. Disconnect the power door lock actuator connector (A).

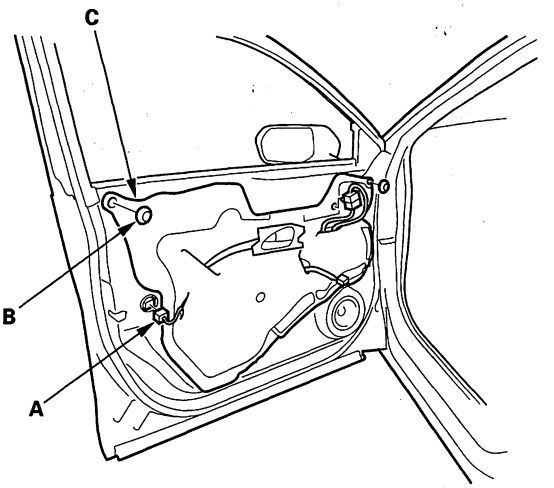


4. Remove the plug caps (B), then remove the plastic cover (C), as needed.
5. Detach the rod fastener (A).

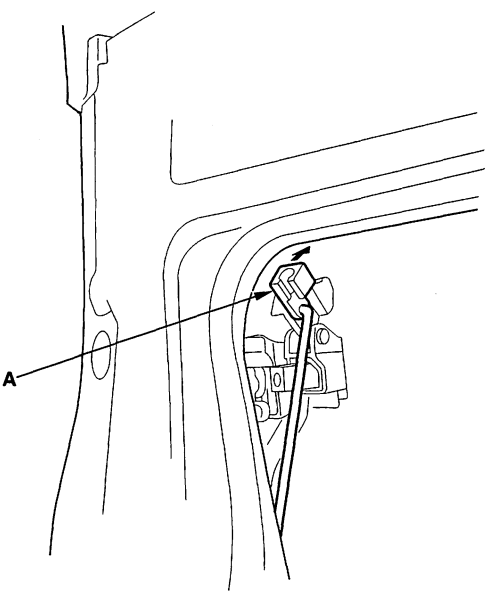




BACK

Protected by AR

6. Remove the maintenance seal (A).

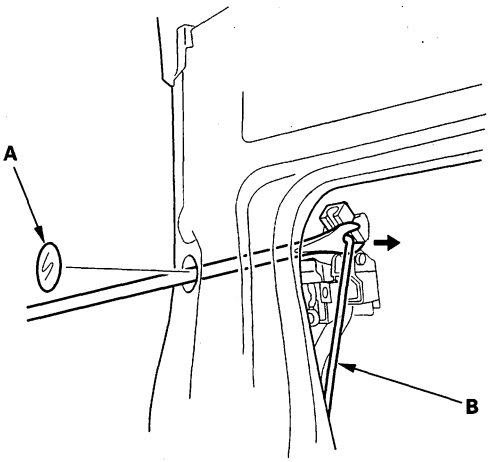


7. With a clip remover, disconnect the outer handle rod (B).

8. Remove the bolt, and free the center lower channel (A).

**Fastener Location**

**▶ : Bolt, 1**

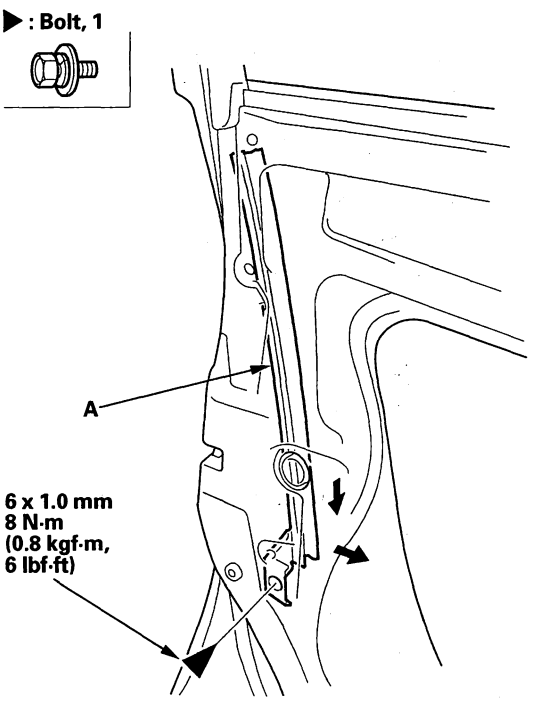


9. Driver's door: Pull both side flanges (A) of the retainer (B) outward, and pull the middle flange portion (C) of the outer casing cover (D) out, then disconnect the door lock cylinder cable (E) from the latch (F).

NOTE: It may necessary to loosen the latch assembly mounting hardware to remove the door lock cylinder cable from the latch.

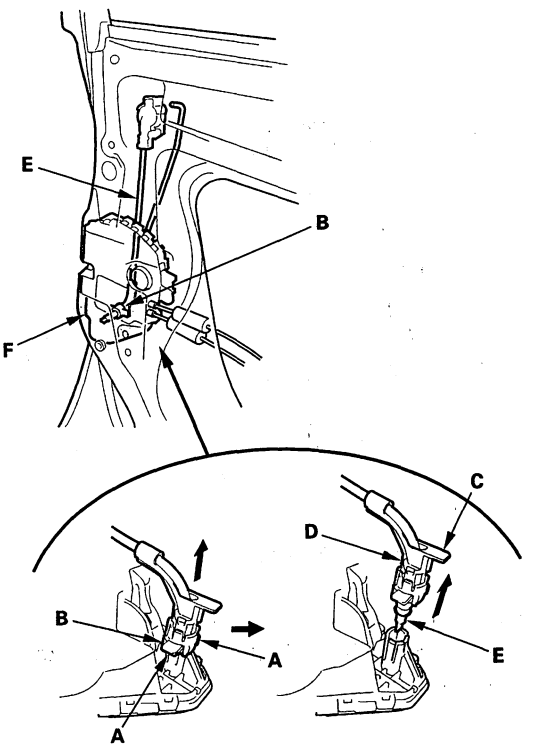


10. Remove the bolt, then remove the spacer (A) by avoiding the projection of the handle.

**Fastener Location**

**▶ : Bolt, 1**

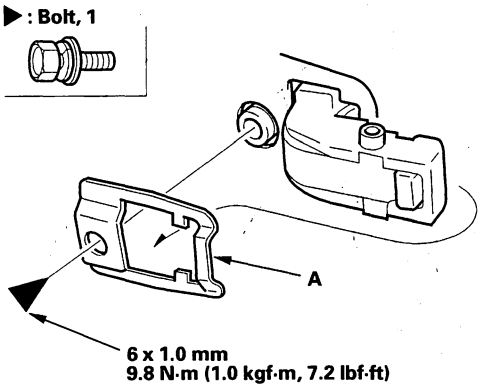


(cont'd)

Protected by AR



## Front Door Outer Handle Replacement (cont'd)

11. Remove the bolt securing the outer handle protector (A). Loosen the mounting nut and remove the support bar (B). Remove the protector by releasing the hook (C).

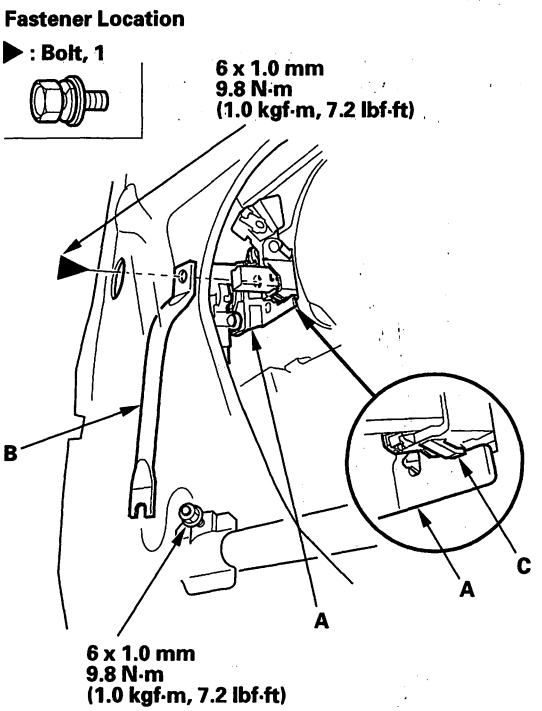


12. While pulling the outer handle (A), remove the handle from the holes in the door panel. Take care not to scratch the door.

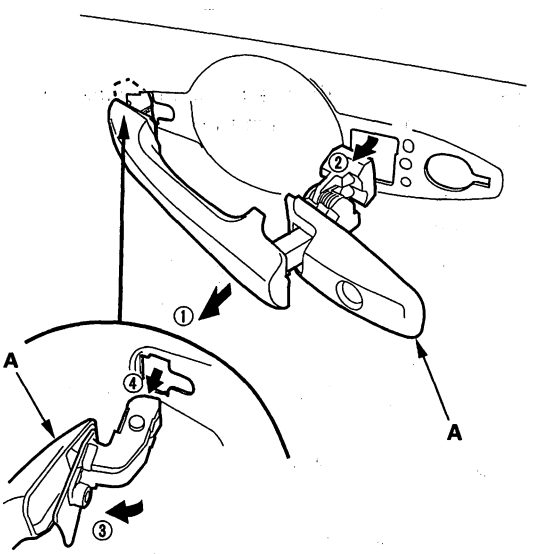


13. If necessary, remove the special screws, then separate the door lock cylinder (A) and outer handle protector (B). If the retainer (C) is damaged, release the hooks (D), and replace it.

NOTE: If removed, the special screws must be replaced.

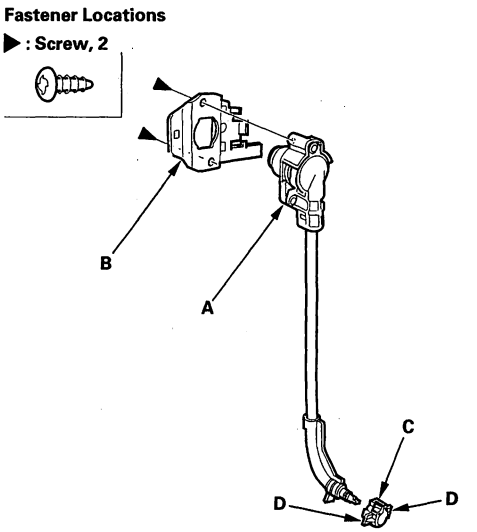


14. Remove the rod fastener (A) from the outer handle (B), then replace it with a new one.

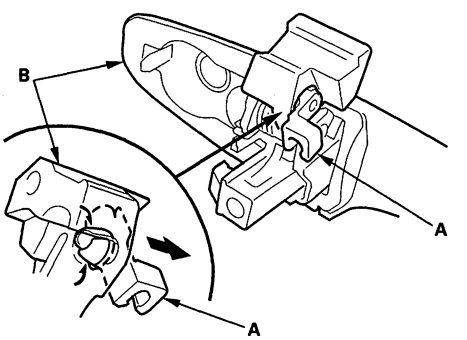


15. Install the handle in the reverse order of removal, and note these items:

- Make sure the door lock cylinder cable and each rod is connected securely.
- Make sure the door key cylinder/door locks operate properly.
- Make sure the door handle works properly.
- When reinstalling the door panel, make sure the plastic cover is installed properly and sealed around its outside perimeter to seal out water.
- Check for water leaks.



BACK

Protected by AR

## Front Door Latch Replacement

NOTE: Put on gloves to protect your hands.

1. Raise the glass fully.
2. Remove the door panel and inner handle (see page 20-6).
3. Remove the plastic cover, as needed (see step 3 on page 20-8).
4. Detach the rod fastener (see step 5 on page 20-8).
5. Disconnect the outer handle rod from the outer handle (see step 6 on page 20-9).
6. Pull the glass run channel (A) away as needed, and remove the bolt, then remove the center lower channel (B) by pulling it downward.

**Fastener Location**

▶ : Bolt, 1

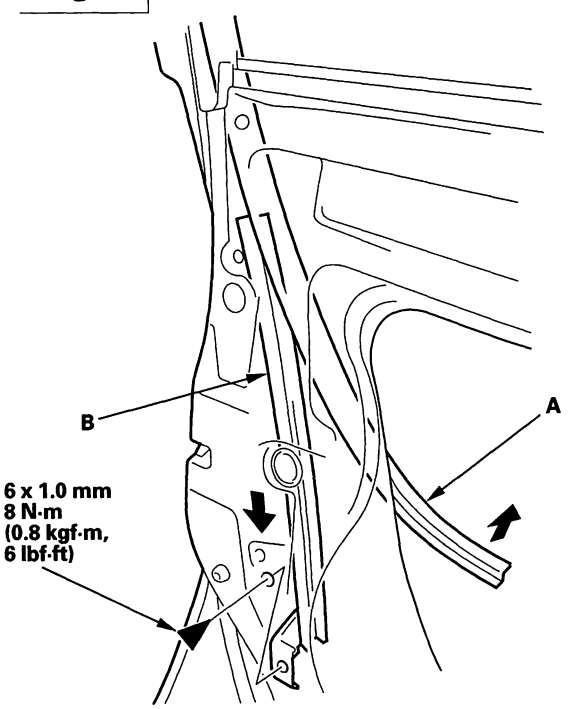


7. Disconnect the door lock cylinder cable from the latch (see step 9 on page 20-9).
8. Remove the screws (A, B) securing the latch (C), then remove the latch through the hole in the door. Take care not to bend the outer handle rod (D), latch cable (E), and inner handle cable (F).

**Fastener Locations**

A ▶ : Screw, 3  B ▶ : Screw, 1

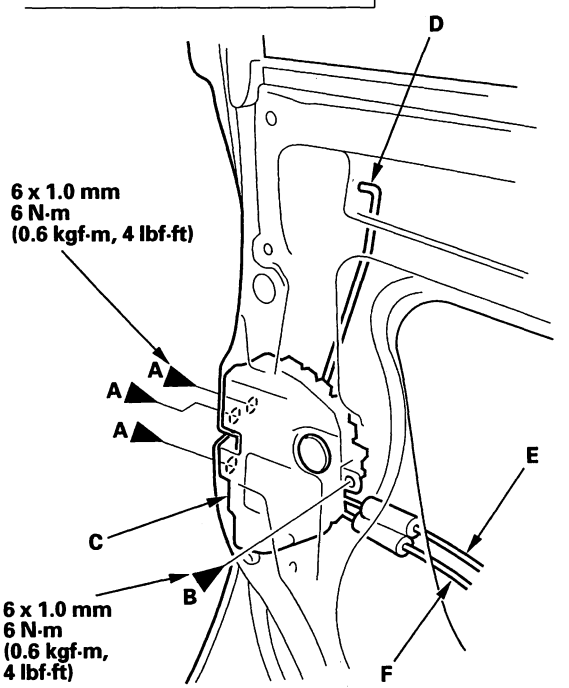


(cont'd)

BACK

Protected by AR



## Front Door Latch Replacement (cont'd)

9. Remove the screw, then remove the latch protector (A) by releasing the hook (B).

**Fastener Location**

**▶ : Screw, 1**

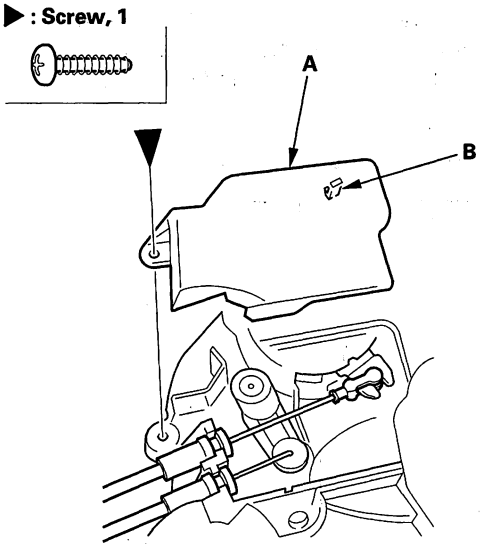


10. Detach the latch cable (A) and the inner handle cable (B) from the latch (C).

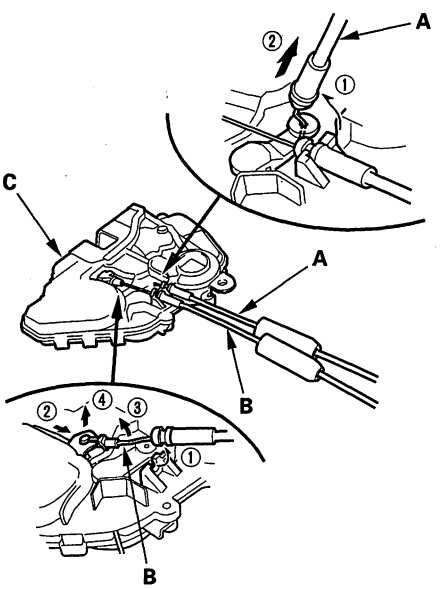


11. Install the latch in the reverse order of removal, and note these items:

- Make sure the actuator connector is plugged in properly and each rod is connected securely.
- Make sure the door locks and opens properly.
- When reinstalling the door panel, make sure the plastic cover is installed properly and sealed around its outside perimeter to seal out water.
- Check for water leaks.



BACK

Protected by AR

## Front Door Glass and Regulator Replacement

NOTE: Put on gloves to protect your hands.

1. Remove the door panel (see page 20-6).

2. Disconnect the power door lock actuator connector (A), and remove the plug caps (B).

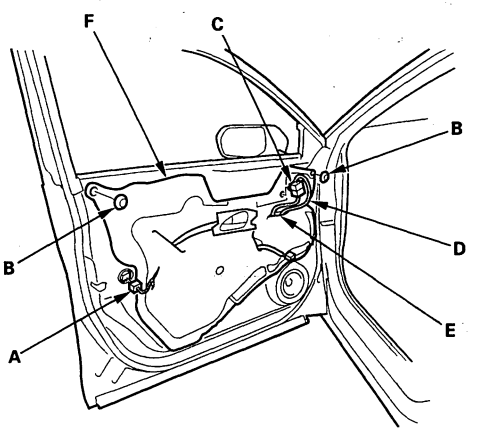


3. Detach the connector clip (C), and pass the harnesses (D) through the slits (E) in the plastic cover (F), then remove the plastic cover.

4. Carefully raise the glass (A) until you can see the bolts, then remove them. Carefully pull the glass out through the window slot. Take care not to drop the glass inside the door.

**Fastener Locations**

**▶ : Bolt, 2**

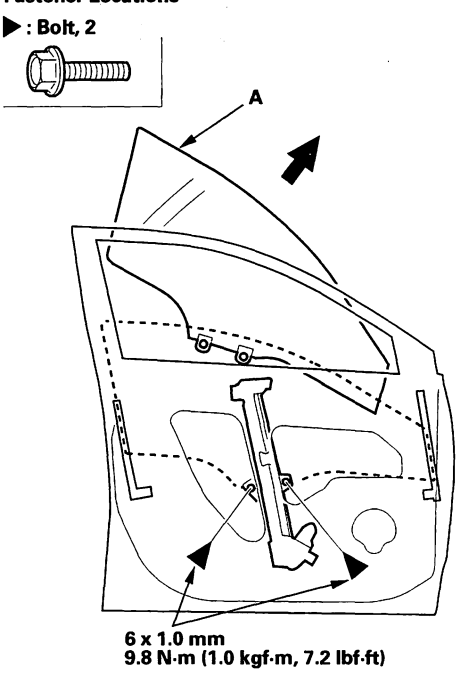


5. Disconnect the connector (A) from the regulator (B).

**Fastener Locations**

**C ▶ : Bolt, 4 D ▶ : Bolt, 1**

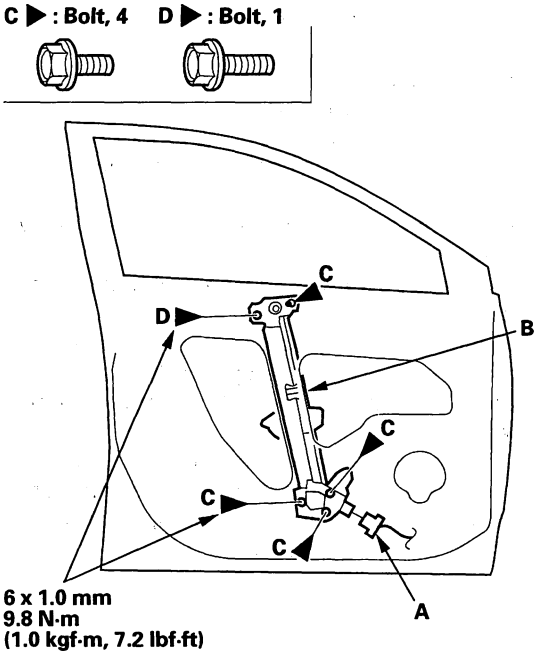


6. Remove the bolts (C), and loosen the bolt (D), then remove the regulator through the hole in the door.

7. Apply multipurpose grease to all the sliding surfaces of the regulator (A) where shown.

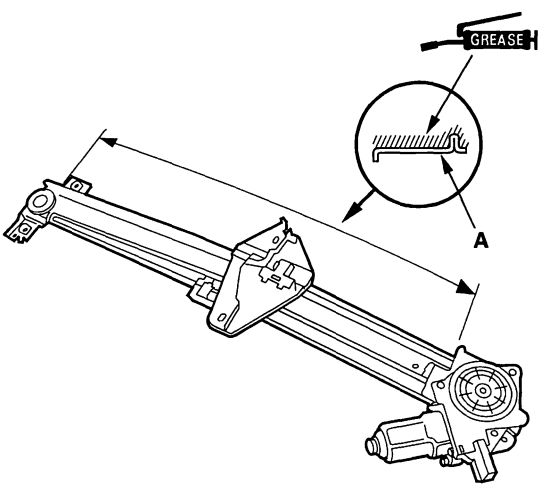


(cont'd)

Protected by AR



## Front Door Glass and Regulator Replacement (cont'd)

8. Install the glass and regulator in the reverse order of removal, and note these items:

   - Roll the glass up and down to see if it moves freely without binding.
   - Make sure that there is no clearance between the glass and glass run channel when the glass is closed.
   - Adjust the position of the glass as necessary (see page 20-28).
   - Reset the power window control unit (see page 22-213).
   - When reinstalling the door panel, make sure the plastic cover is installed properly and sealed around its outside perimeter to prevent water leaks.
   - Check for water leaks (see step 7 on page 20-28).
   - Test-drive and check for wind noise and rattles.
   - Make sure the power door locks, windows, and power mirror operate properly.

## Front Door Sash Inner Trim Replacement

NOTE: Put on gloves to protect your hands.

1. Remove the door panel (see page 20-6).

2. Using the clip remover, detach the clip fastening the front door sash inner trim (A).

**Fastener Location**

▷ : **Clip, 1**

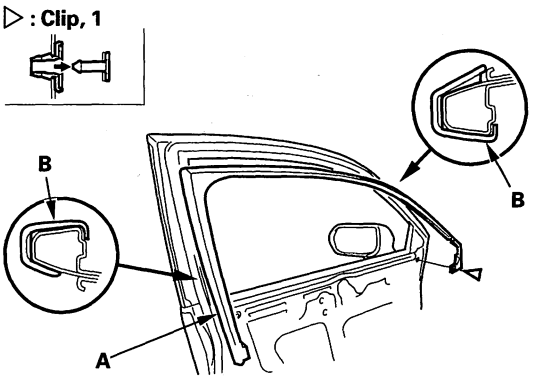


3. Pull the door glass opening side of the trim back to release the hooks (B) from the door glass opening flange of the door sash.

4. Install the trim in the reverse order of removal, and note these items:

   - Check if the clips are damaged or stress-whitened, and if necessary, replace them with new ones.
   - Push the hooks into place securely.



BACK

Protected by AR

## Outer Corner Front Door Trim Replacement

NOTE: Take care not to scratch the door.

1. Remove the front door speaker (see page 23-102).
2. From inside the door, remove the screws.
3. Pull up the outer corner front door trim (A) to release the hooks (B), then remove it from the door.

**Fastener Locations**

**▶ : Screw, 2**

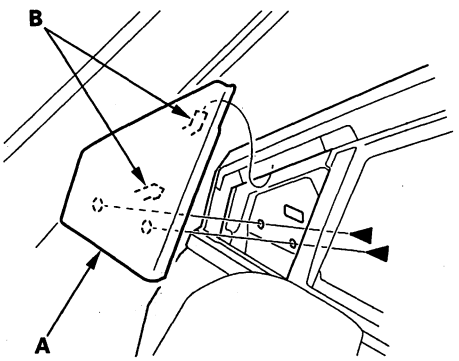


4. Install the corner front door trim in the reverse order of removal.

## Front Door Glass Outer Weatherstrip Replacement

NOTE:
- Put on gloves to protect your hands.
- Take care not to scratch the door.

1. Remove these items:
   - Corner front door trim (see page 20-15)
   - Door panel (see page 20-6)
   - Plastic cover (see step 3 on page 20-8)
   - Front door glass (see page 20-13)
2. Release the front hook (A) from inside of the door, then pull up the front door glass outer weatherstrip (B).

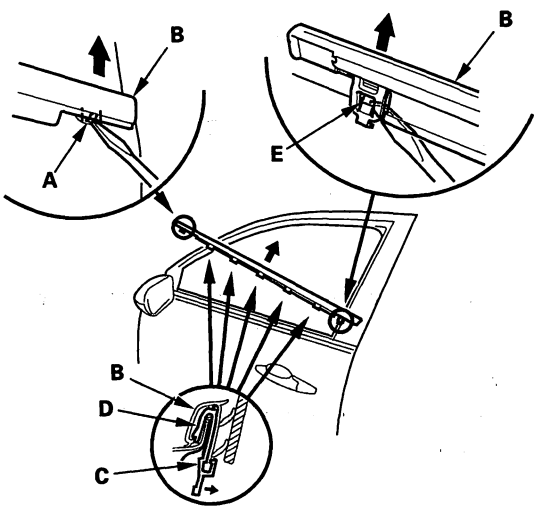


3. Starting at the front, release the hook (C) the clips (D) and pull up the door glass outer weatherstrip from the front.
4. Release the rear hook (E) out from inside of the door, then remove the weatherstrip.
5. Install a new weatherstrip in the reverse order of removal, and push it into place securely.

Protected by AR



## Lower Front Door Sill Seal Replacement

NOTE:
- Put on gloves to protect your hands.
- Take care not to scratch the door.

1. Remove the lower sill seal (A) by pulling it.

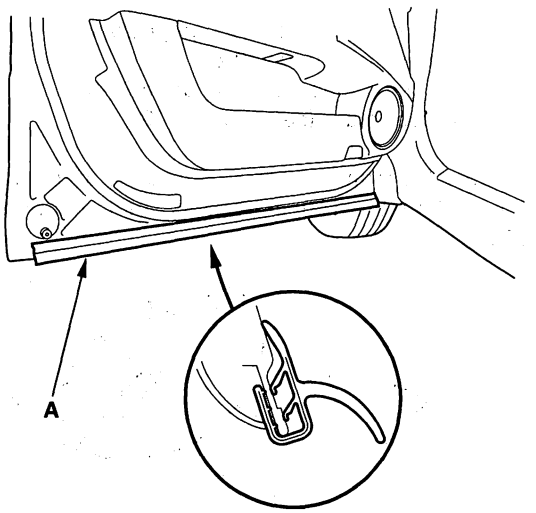


2. Install the lower sill seal in the reverse order of removal, and these items:
   - Make sure there are no wrinkles in the seal.
   - Make sure the lower sill seal is installed in the door flange.

## Front Door Weatherstrip Replacement

NOTE:
- Put on gloves to protect your hands.
- Take care not to scratch the door.
- Use a clip remover to remove the clips.

1. At the A-pillar, remove the door checker mounting bolt (A).

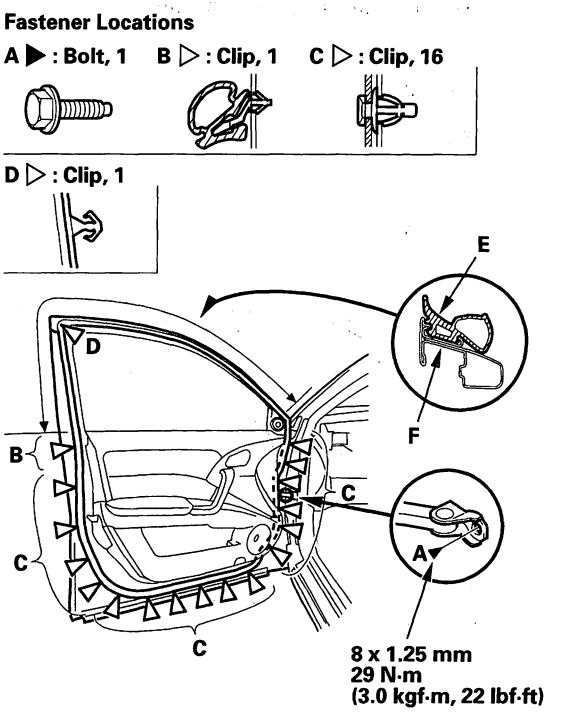


2. Detach the clips (B, C, D), then remove the door weatherstrip (E).

3. Install the weatherstrip in the reverse order of removal, and note these items:
   - Check if the clips are damaged or stress-whitened, and if necessary, replace them with new ones.
   - Make sure the weatherstrip is installed in the holder (F) securely.
   - Apply medium strength type liquid thread lock to door checker mounting bolt before installation.
   - Check for water leaks.



BACK

Protected by AR

# Rear Door Panel Removal/Installation

**Special Tools Required**
- KTC trim tool set SOJATP2014 *
- Trim pad remover, Snap-on A 177A or equivalent, commercially available

* Available through the American Honda Tool and Equipment Program; call 888-424-6857

NOTE:
- Use the appropriate tool from the KTC trim tool set to avoid damage when prying components.
- Take care not to scratch the door and related parts.

1. Raise the glass fully.

2. Using the appropriate trim tool, pry out on the lower portion of the inner handle cap (A) to release the hooks (B, C).

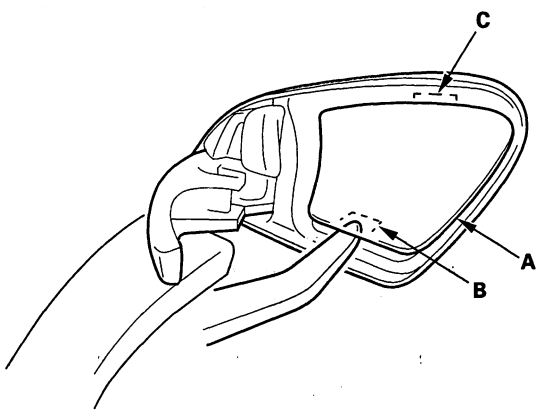


3. Remove the screws (A, B) from the inner handle (C).

**Fastener Locations**
**A ▶ : Screw, 2 B ▶ : Screw, 1**

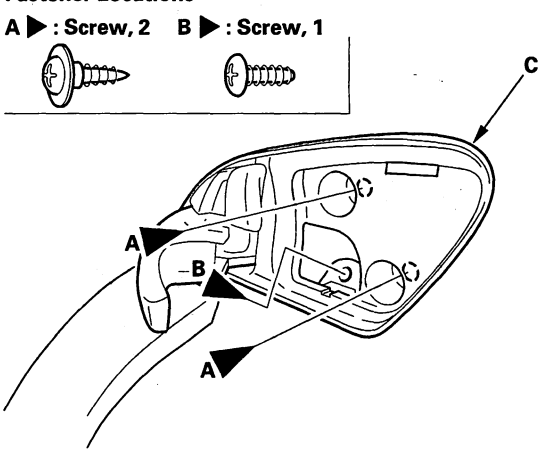


4. Remove the screw.

**Fastener Location**
**▶ : Screw, 1**

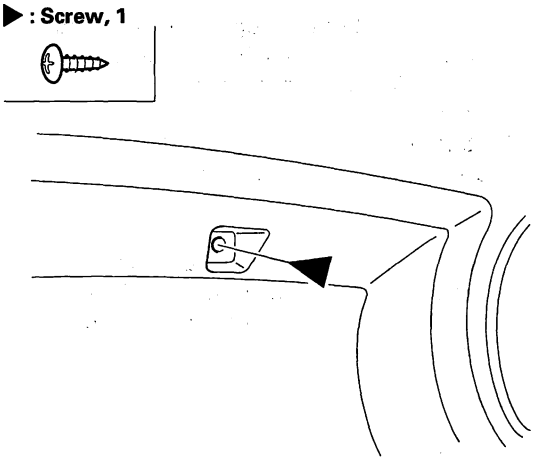

5. Pull out the rear edge on the quarter inner trim (A) to detach the clip, then release the hooks (B) and remove it.

NOTE: When installing the trim, first attach the hooks into the door panel properly.

**Fastener Locations**
**▷ : Clip, 2**

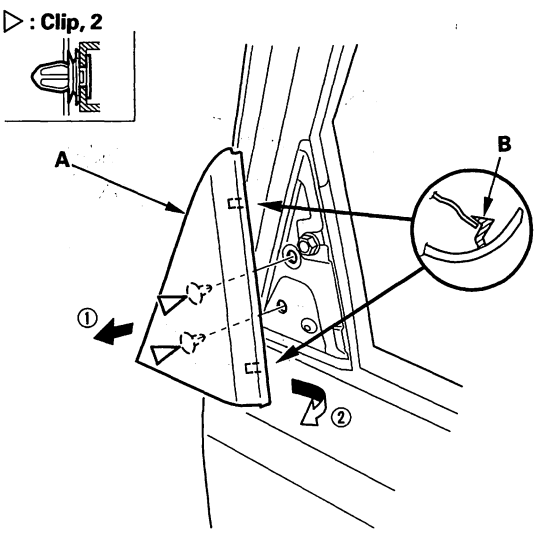


(cont'd)

Protected by AR



## Rear Door Panel Removal/Installation (cont'd)

6. Remove the door panel (A) with as little bending as possible to avoid creasing or breaking it.

   -1 Start at the bottom edge of the door panel, release the clip (B) with a commercially available trim pad remover.
   -2 Detach the upper clips.
   -3 Starting at the rear, pull the door panel upward.
   -4 Disconnect the power window switch connector.

   NOTE: The inner handle cable and latch cable are connected to the inner handle. Do not pull the door panel up too far, or these cables will be damaged.

**Fastener Locations**

▷ : Clip, 7

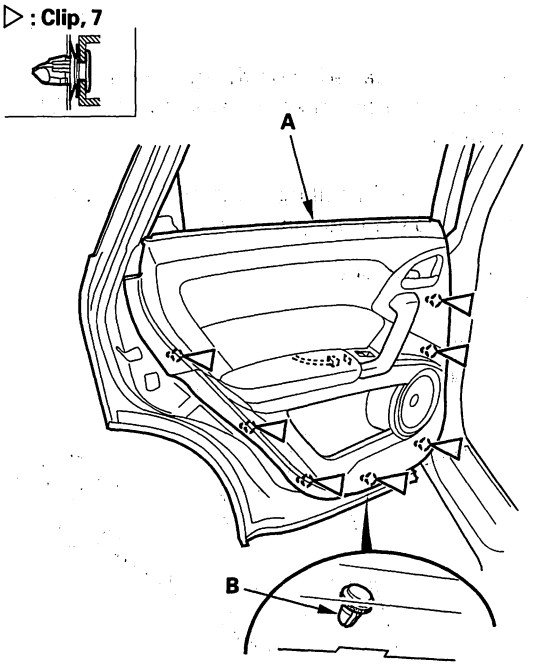


7. While holding the door panel away from the door, remove the inner handle (A) from the door panel by detaching the hooks (B). Remove the door panel.

**Fastener Locations**

▷ : Clip, 3

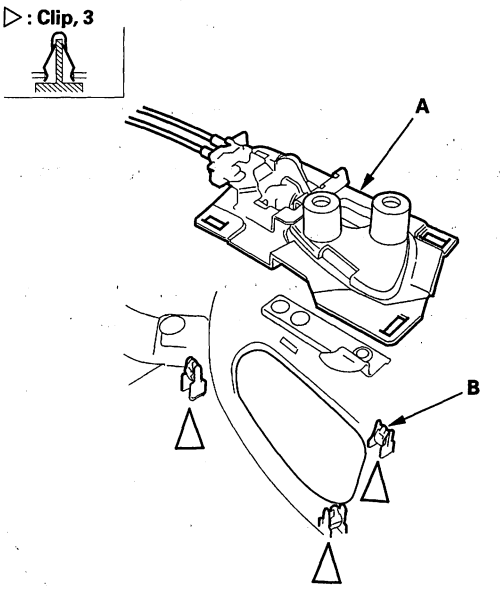


8. If necessary, disconnect the inner handle cable (A) and the latch cable (B) from the inner handle (C), then remove the handle.

   -1 Detach the inner handle cable fastener (D) with a flat-tip screwdriver, then disconnect the inner handle cable from the cable fastener (E).
   -2 Disconnect the latch cable from the cable fastener (F).

   NOTE: Check for damaged or stress-whitened cable fasteners.

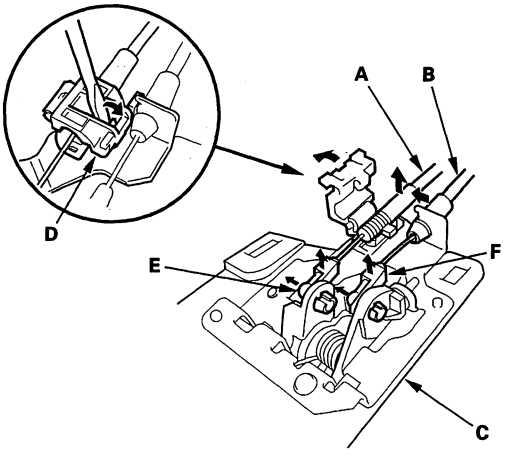




BACK

Protected by AR

9. Install the door panel in the reverse order of removal, and note these items:

   - Check if the clips are damaged or stress-whitened, and if necessary, replace them with new ones.
   - Replace any damaged cable fasteners with new ones.
   - The latch cable (A) should be fixed to the cable fastener (B) with the latch in lock position as shown.
   - Make sure the power window switch connector is plugged in properly, and the cable is connected securely.
   - Make sure the window and power door lock operate properly.

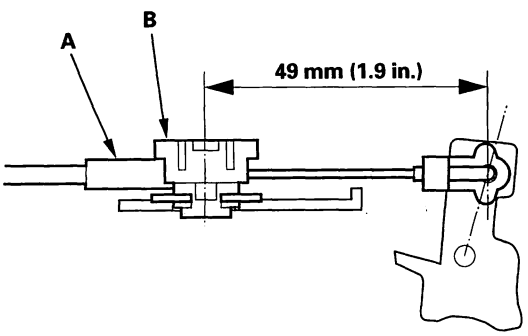


## Rear Door Outer Handle Replacement

NOTE: Put on gloves to protect your hands.

1. Raise the glass fully.

2. Remove the door panel (see page 20-17).

3. Detach the harness clip (A), and disconnect the power door lock actuator connector (B).

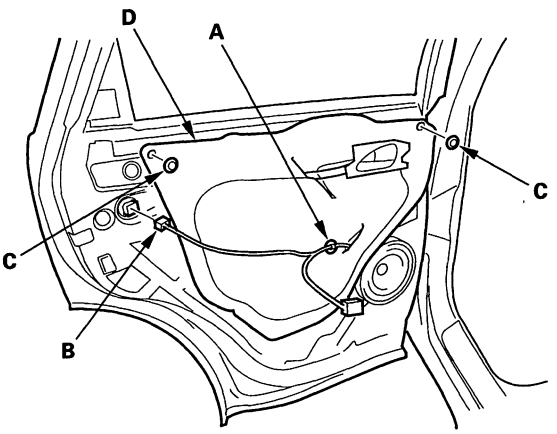


4. Remove the plug caps (C), then remove the plastic cover (D), as needed.

5. Remove the screws and nut securing the latch (see step 4 on page 20-21).

6. Lower the latch (A).

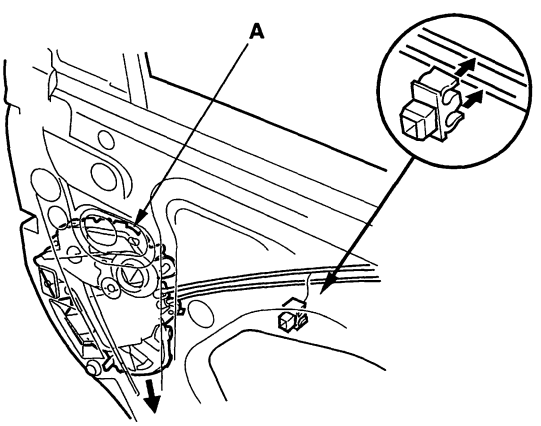


(cont'd)

Protected by AR



## Rear Door Outer Handle Replacement (cont'd)

7. Detach the rod fastener (A).

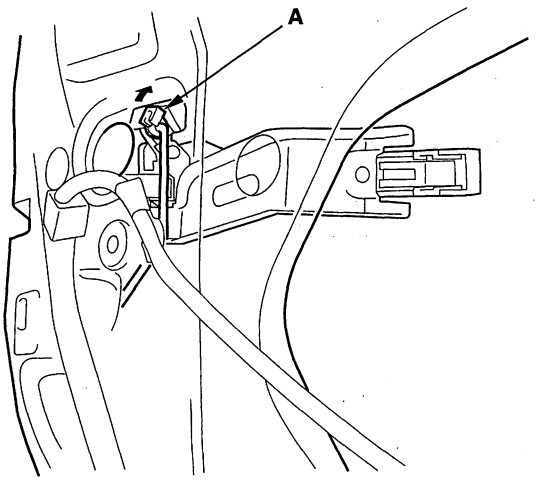


8. With a clip remover, disconnect the outer handle rod (A) from the outer handle (B).

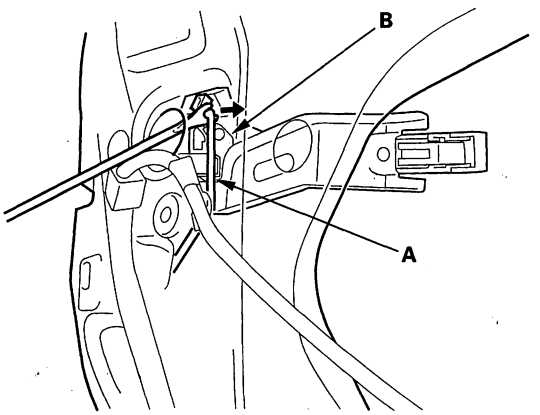


9. Remove the maintenance seal (A). Remove the bolts securing the outer handle protector (B), then remove it.

**Fastener Locations**

**▶ : Bolt, 2**

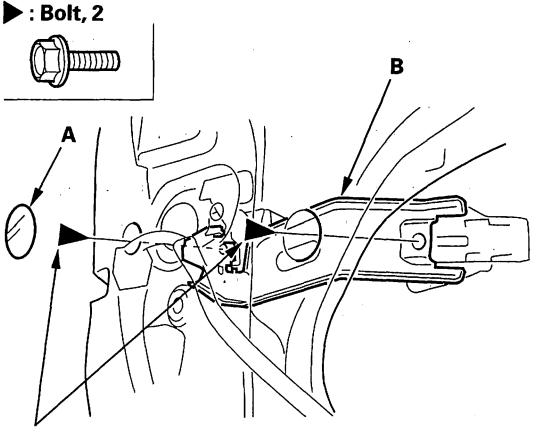


**6 x 1.0 mm**
**9.8 N·m**
**(1.0 kgf·m, 7.2 lbf·ft)**

10. While pulling the outer handle (A), remove the handle from the holes in the door panel. Take care not to scratch the door.

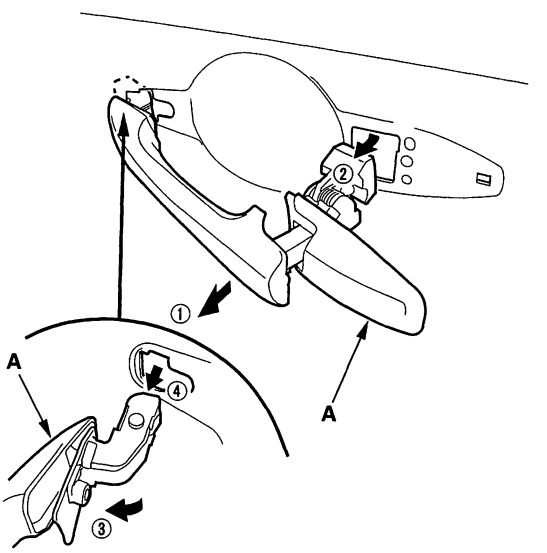




BACK

Protected by AR

11. Remove the rod fastener (A) from the outer handle (B), then replace it with a new one.

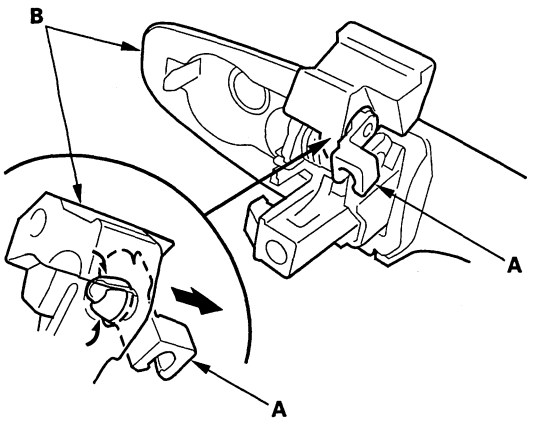


12. *Install* the handle in the reverse order of removal, and note these items:

- Make sure the outer handle rod is connected securely.
- Make sure the door handle works properly.
- Make sure the door locks and opens properly.
- When installing the door panel, make sure the plastic cover is installed properly and sealed around its outside perimeter to seal out water.
- Check for water leaks.

## Rear Door Latch Replacement

NOTE: Put on gloves to protect your hands.

1. Raise the glass fully.
2. Remove the door panel (see page 20-17).
3. Remove the plastic cover, as needed (see step 3 on page 20-19).
4. Remove the screws and nut securing the latch (A).

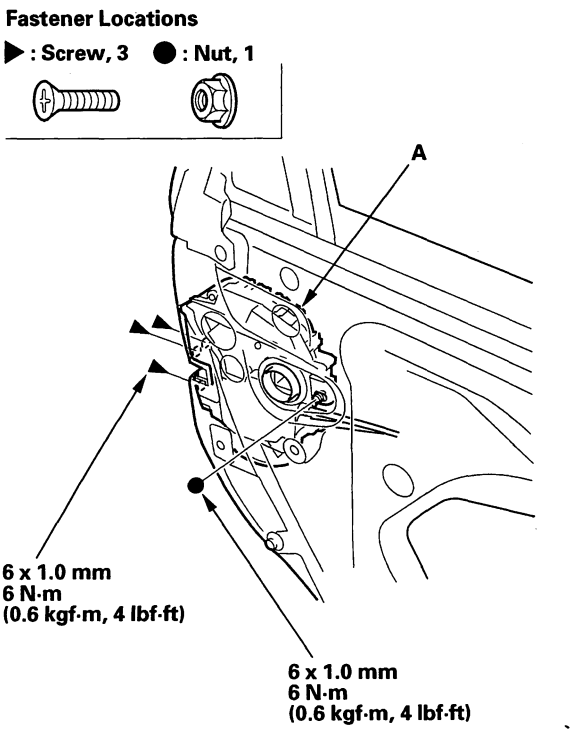


5. Detach the rod fastener (see step 7 on page 20-20).
6. Disconnect the outer handle rod from the outer handle (see step 8 on page 20-20).

(cont'd)

Protected by AR



## Rear Door Latch Replacement (cont'd)

7. Detach the latch cable (A) and inner handle cable (B) from the holder (C), and lower the latch (D). Remove the latch out from between the rear lower channel (E) and the door. Take care not to bend the outer handle rod, latch cable, and inner handle cable.

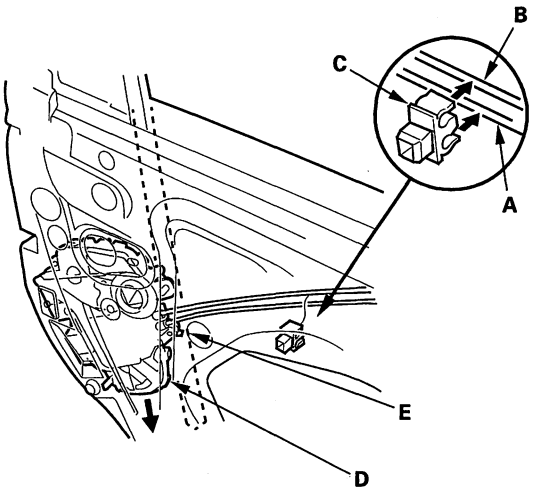


8. Remove the screw, then remove the latch protector (A) by releasing the hook (B).

**Fastener Location**

**▶ : Screw, 1**

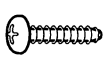

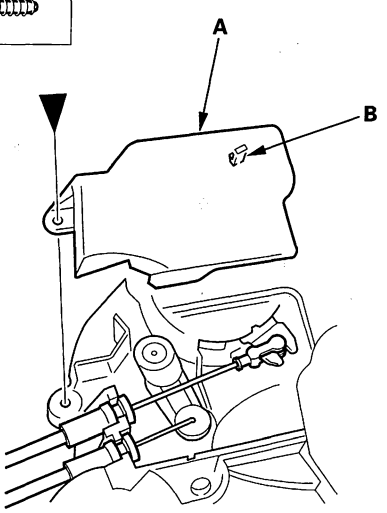


9. Detach the latch cable (A) and the inner handle cable (B) from the latch (C).

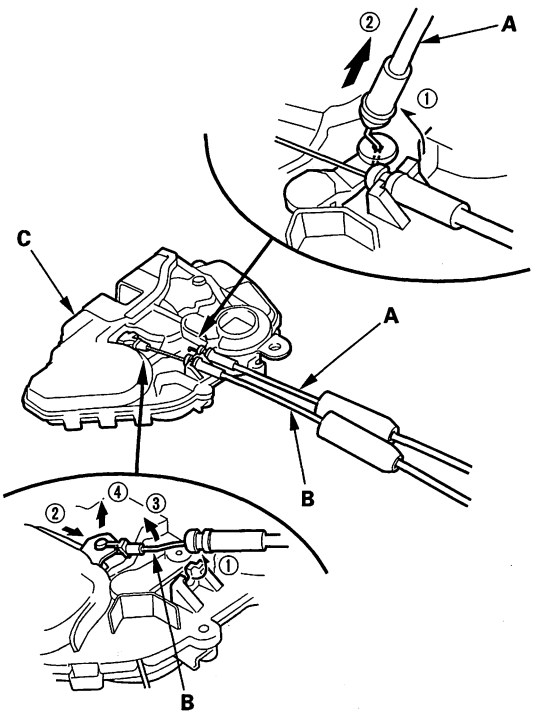


10. Install the latch in the reverse order of removal, and note these items:

- Make sure the connector is plugged in properly, and each rod is connected securely.
- Make sure the door locks and opens properly.



BACK

Protected by AR

## Rear Door Glass and Regulator Replacement

NOTE: Put on gloves to protect your hands.

1. Remove the door panel (see page 20-17).

2. Detach the harness clip (A), and disconnect the power door lock actuator connector (B). Remove the plug caps (C).

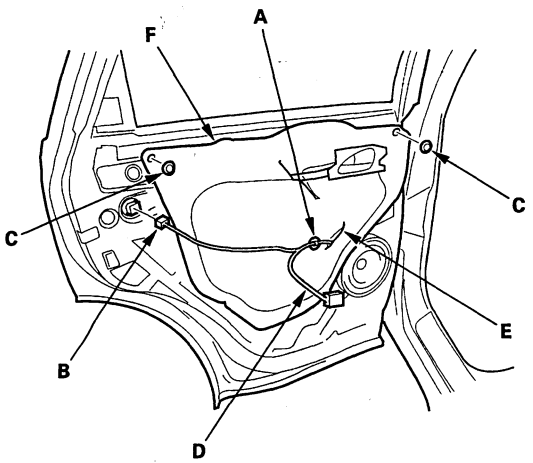


3. Pass the harness (D) through the slit (E) in the plastic cover (F), then remove the plastic cover.

4. Carefully lower the glass (A) until you can see the bolts, then remove them. Carefully lower the glass into the door. Take care not to drop the glass inside the door.

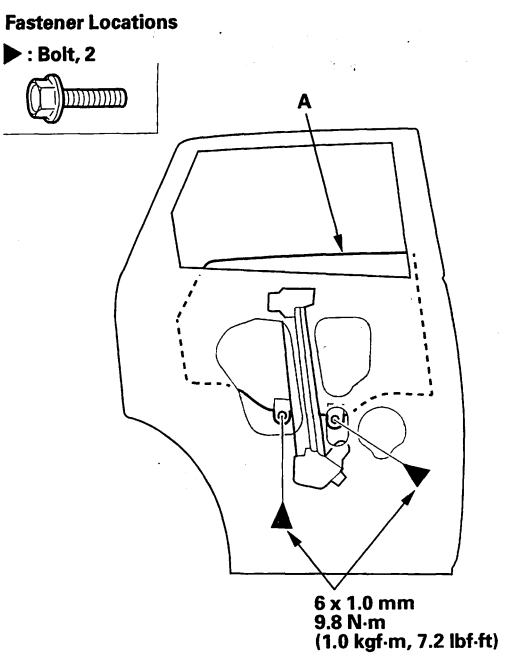


5. Remove the maintenance cap (A). Remove the bolt and nut from the rear lower channel (B).

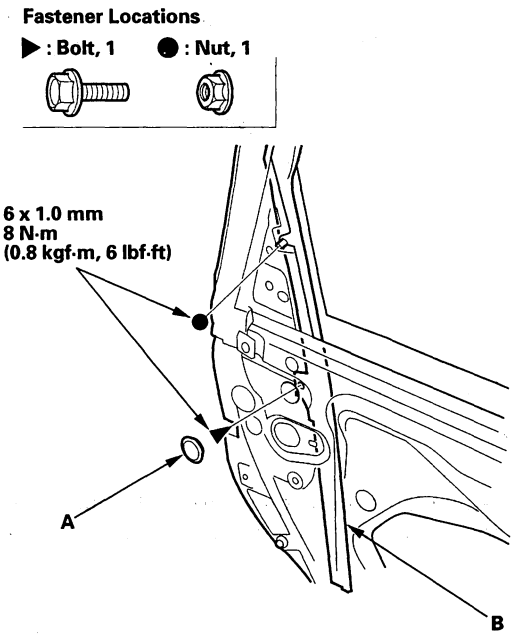


6. Pull the glass run channel (A) away as needed. Pull the rear lower channel (B) forward from the door, and release the channel from the glass (C) by pulling the channel up.

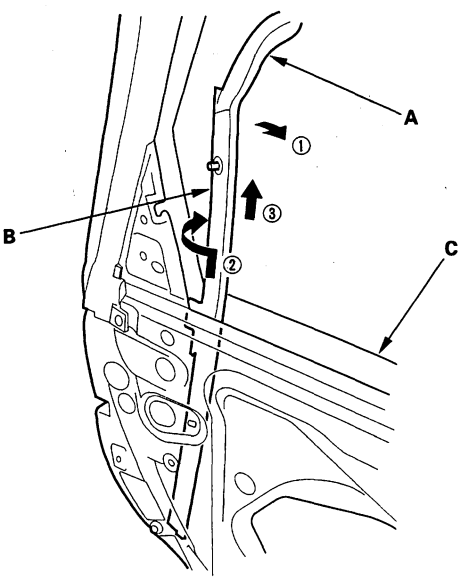


7. Twist the rear lower channel to pass it through the gap between the door panel and the rear sash, then pull the channel up to remove it.

(cont'd)

Protected by AR



## Rear Door Glass and Regulator Replacement (cont'd)

8. Remove the rear lower channel (A) from the glass channel (B).

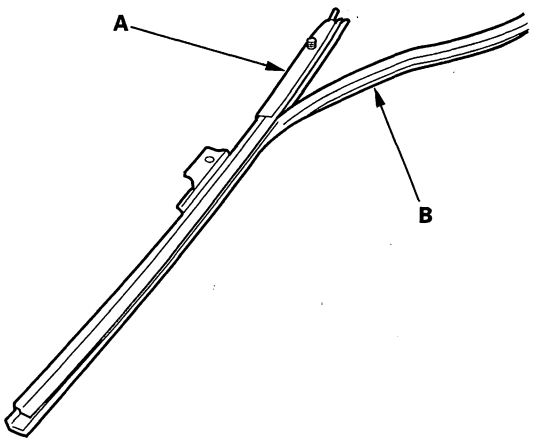


9. Carefully remove the glass (A) out through the window slot. Take care not to drop glass inside the door.

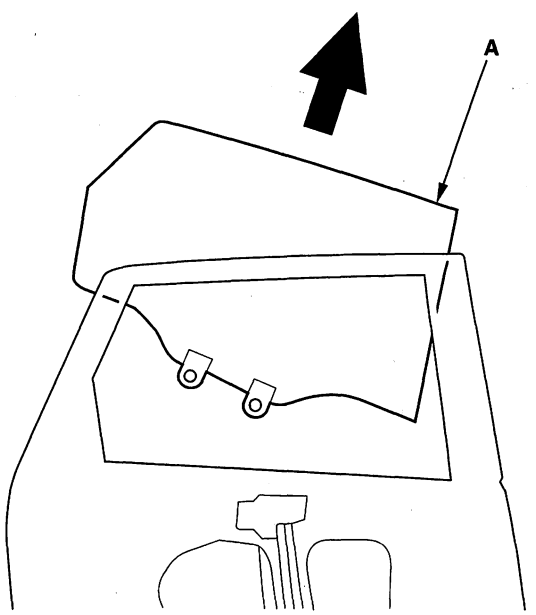


10. Disconnect the connector (A) from the regulator (B).

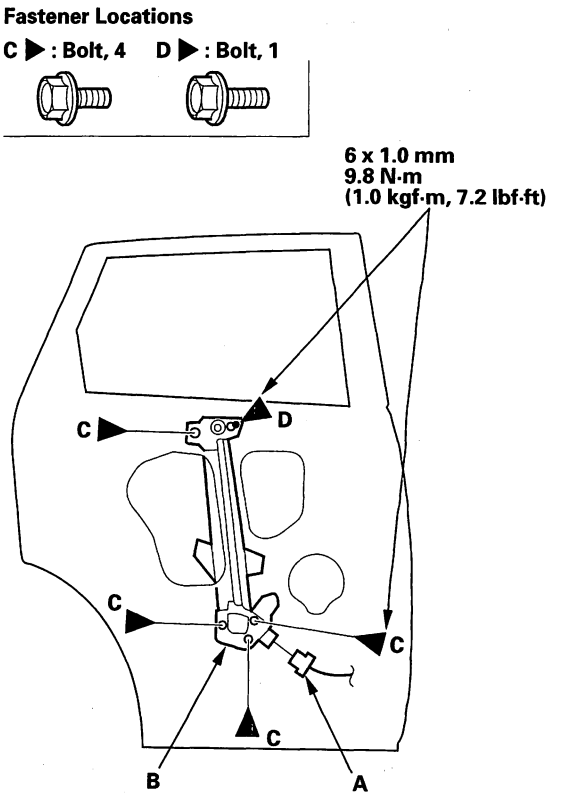


11. Remove the bolts (C), and loosen the bolt (D), then remove the regulator through the hole in the door.

12. Apply multipurpose grease to all the sliding surfaces of the regulator (A) where shown.

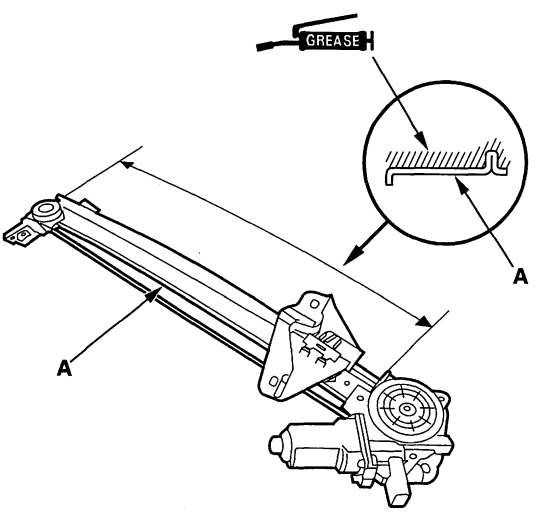




BACK

Protected by AR

13. Install the glass and regulator in the reverse order of removal, and note these items:

    - Roll the glass up and down to see if it moves freely without binding.
    - Make sure that there is no clearance between the glass and glass run channel when the glass is closed.
    - Adjust the position of the glass as necessary (see page 20-28).
    - When reinstalling the door panel, make sure the plastic cover is installed properly and sealed around its outside perimeter to prevent water leaks.
    - Check for water leaks (see step 7 on page 20-28).
    - Test-drive and check for wind noise and rattles.
    - Make sure the power door locks, windows, and power mirror operate properly.

## Rear Door Sash Inner Trim Replacement

NOTE: Put on gloves to protect your hands.

1. Remove the door panel (see page 20-17).

2. Using the clip remover, detach the clip fastening the rear door sash inner trim (A).

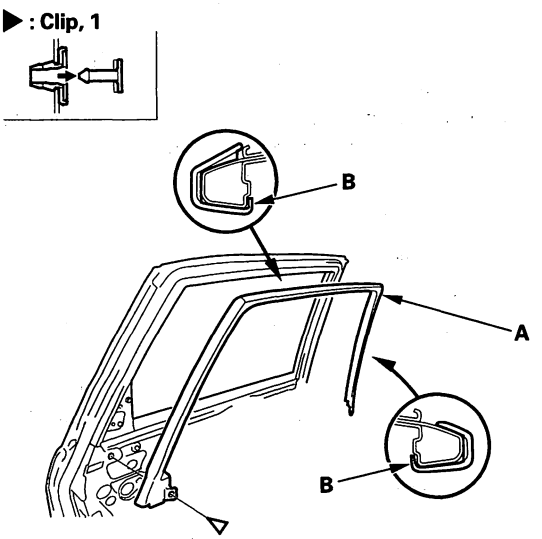


3. Pull the door glass opening side of the trim back to release the hooks (B) from the door glass opening flange of the door sash.

4. Install the trim in the reverse order of removal, and note these items:

    - Check if the clip is damaged or stress-whitened, and if necessary, replace it with a new one.
    - Push the hooks into place securely.

Protected by AR



## Rear Door Rear Sash Trim Replacement

NOTE: Put on gloves to protect your hands.

1. Lower the glass fully.
2. Remove the quarter inner trim (see step 5 on page 20-17).
3. From inside the door, remove the screw.
4. Pull up on the rear sash trim (A) with the rear of the door glass outer weatherstrip (B) to release the hooks (C), then remove it from the door and the weatherstrip. Do not remove the weatherstrip at this time, and take care not to damage the weatherstrip.

**Fastener Location**

**▶ : Screw, 1**

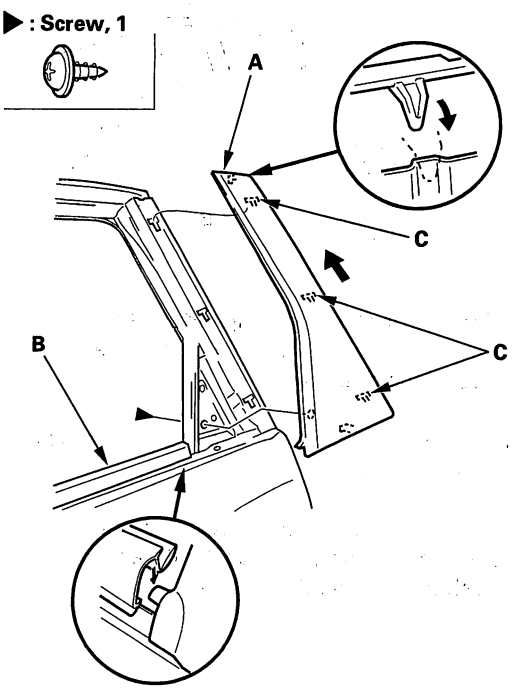


5. Install the rear sash trim in the reverse order of removal.
6. Push the rear portions of the door glass outer weatherstrip into place securely.

## Rear Door Glass Outer Weatherstrip Replacement

NOTE:
- Put on gloves to protect your hands.
- Take care not to scratch the door.

1. Remove these items:
   - Door panel (see page 20-17)
   - Plastic cover (see step 3 on page 20-19)
   - Rear door glass (see page 20-23)
2. Starting at the rear, release the hooks (A) the clips (B) and pull up the rear door glass outer weatherstrip (C) from the rear.

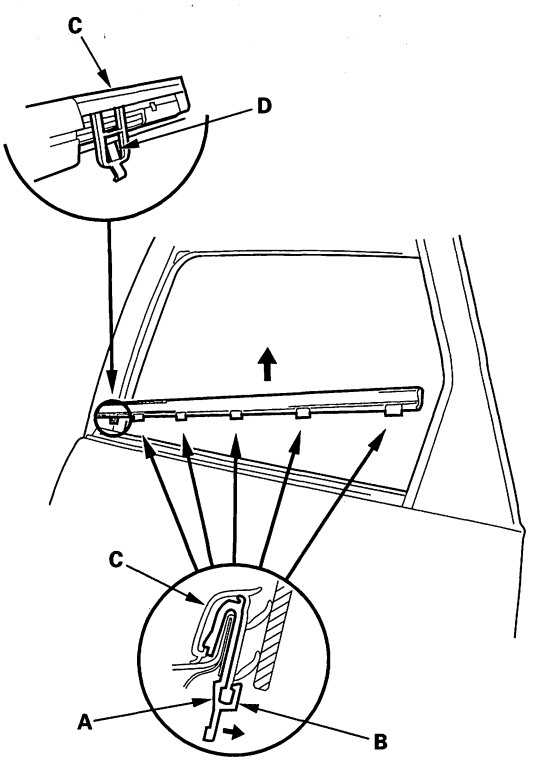


3. Release the front hook (D) out from inside of the door, then remove the weatherstrip.
4. Install a new weatherstrip in the reverse order of removal, and push it into place securely.



BACK

Protected by AR

## Lower Rear Door Sill Seal Replacement

NOTE:
- Put on gloves to protect your hands.
- Take care not to scratch the door.

1. Remove the lower sill seal (A) by pulling it.

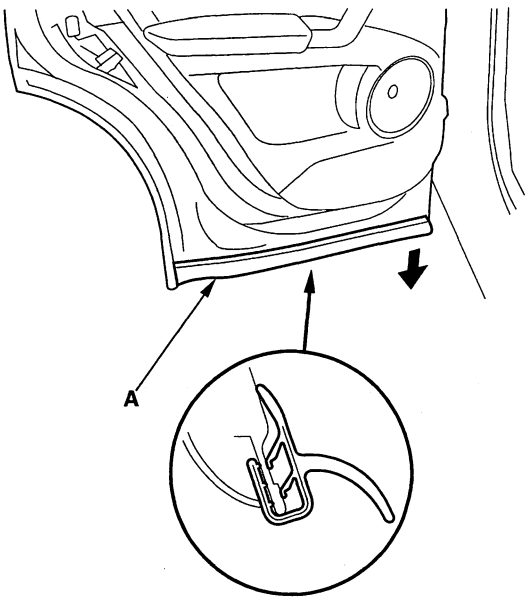


2. Install the lower sill seal in the reverse order of removal, and note these items:
   - Make sure there are no wrinkles in the seal.
   - Make sure the lower sill seal is installed in the door flange.

## Rear Door Weatherstrip Replacement

NOTE:
- Put on gloves to protect your hands.
- Take care not to scratch the door.
- Use a clip remover to remove the clips.

1. At the B-pillar, remove the door checker mounting bolt (A).

**Fastener Locations**

**A ▶ : Bolt, 1** **B ▷ : Clip, 2** **C ▷ : Clip, 15**

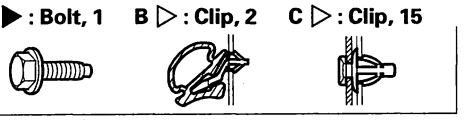

**D ▷ : Clip, 2**

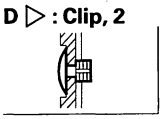

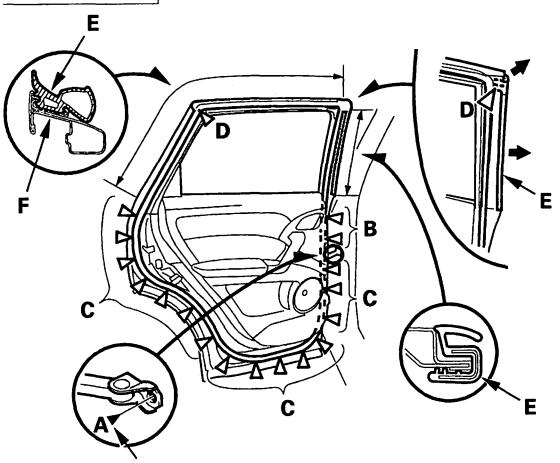


**8 x 1.25 mm**
**29 N·m**
**(3.0 kgf·m, 22 lbf·ft)**

2. Detach the clips (B, C, D), then remove the door weatherstrip (E).

3. Install the weatherstrip in the reverse order of removal, and note these items:
   - Check if the clips are damaged or stress-whitened, and if necessary, replace them with new ones.
   - Make sure the weatherstrip is installed in the holder (F) securely.
   - Apply medium strength type liquid thread lock to door checker mounting bolt before installation.
   - Check for water leaks.

BACK

Protected by AR



## Front and Rear Door Glass Adjustment

NOTE: Check the weatherstrips and glass run channel for damage or deterioration, and replace them if necessary.

1. Place the vehicle on a firm, level surface.

2. Remove these items:

   - Door panel, front door (see page 20-6), rear door (see page 20-17)
   - Plastic cover, front door (see step 3 on page 20-8), rear door (see step 3 on page 20-19)

3. Carefully move the glass (A) until you can see the glass mounting bolts (B), then loosen them.

**Front**

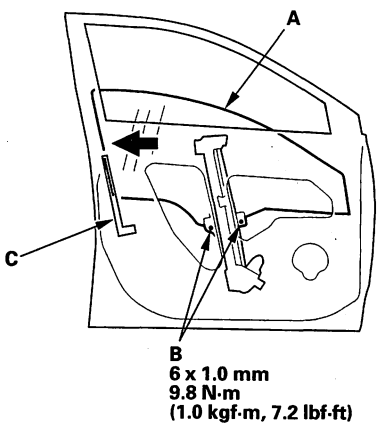


**Rear**

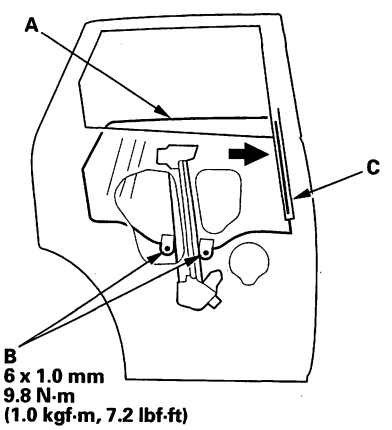


4. Push the glass against the channel (C), then tighten the glass mounting bolts.

5. Check that the glass moves smoothly.

6. Raise the glass fully, and check for gaps. Also check that the glass (A) contacts the glass run channel (B) evenly.

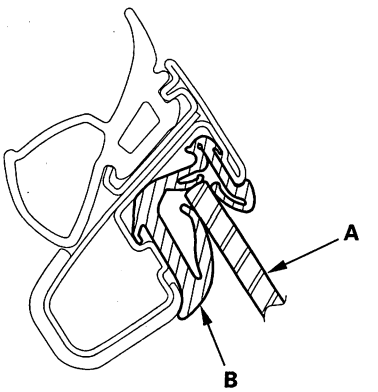


7. Check for water leaks. Run water over the roof and on the sealing area as shown, and note these items:

   - Use a 12 mm (1/2 in.) diameter hose (A).
   - Adjust the rate of water flow as shown (B).
   - Do not use a nozzle.
   - Hold the hose about 300 mm (12 in.) away from the door (C).

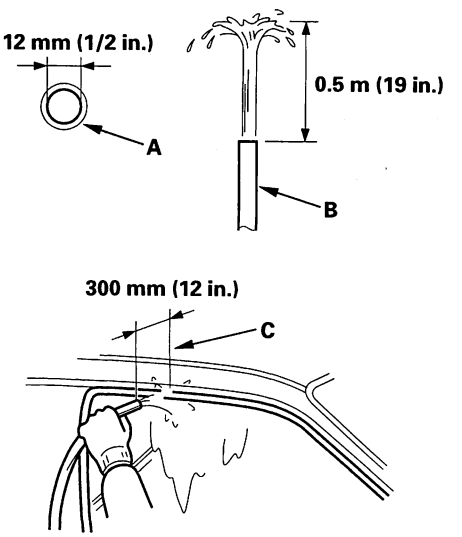


8. Attach the plastic cover making sure it is sealed around its outside perimeter to seal out water, then install the door panel:

   - Front door (see page 20-6)
   - Rear door (see page 20-17)



BACK

Protected by AR

## Front and Rear Door Position Adjustment

SRS components are located in the center pillar bottom area. Review the SRS component locations (see page 24-12), and the precautions and procedures (see page 24-14) before doing repairs or service.

NOTE: Check for a flush fit with the body, then check for equal gaps between the front, rear, and bottom door edges and the body. Check that the door and body edges are parallel. Before adjusting, replace the mounting bolts.

1. Place the vehicle on a firm, level surface when adjusting the doors.

2. Adjust at the hinges (A):

   - Pad a floor jack (B) with shop towels (C), then use the jack to support the door to prevent damage to the door while adjusting it.
   - On the front door: Remove the front inner fender (see page 20-176). Loosen the hinge mounting bolts (D) slightly, and move the door backward or forward, up or down as necessary to equalize the gaps.
   - On the rear door: Loosen the hinge mounting bolts (E) slightly, and move the door backward or forward, up or down as necessary to equalize the gaps.

**Front door**

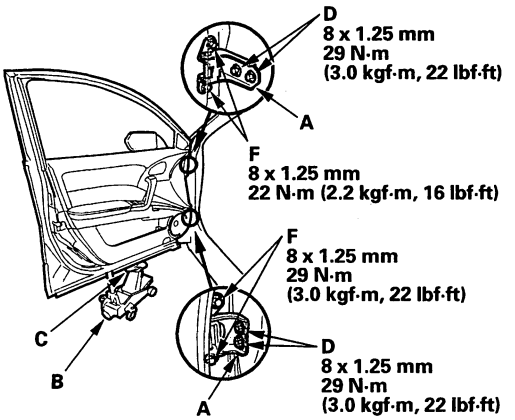


**Rear door**

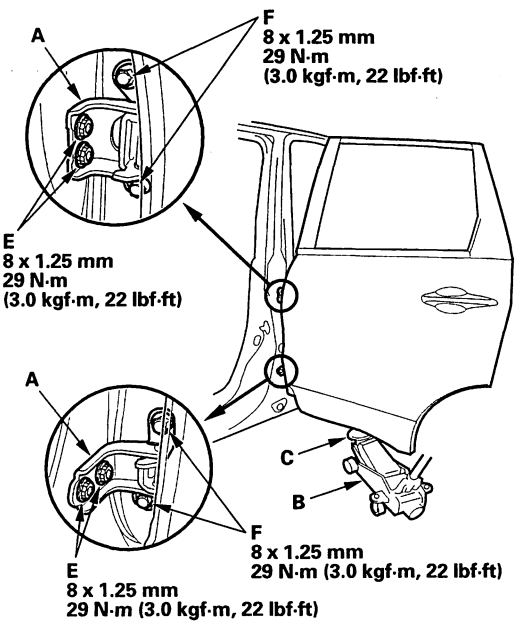


3. If necessary, replace the door mounting bolts with the adjusting bolts (P/N 90102-SFA-305) made specifically for door adjustment, then adjust at the door: Loosen the door mounting bolts (F) slightly, and move the door up or down as necessary to equalize the gaps, and move it in or out until it's flush with the body.

(cont'd)

Protected by AR



## Front and Rear Door Position Adjustment (cont'd)

4. Check that the door and body edges are parallel. If necessary, adjust the door cushions (A) to make the rear of the doors flush with the body.

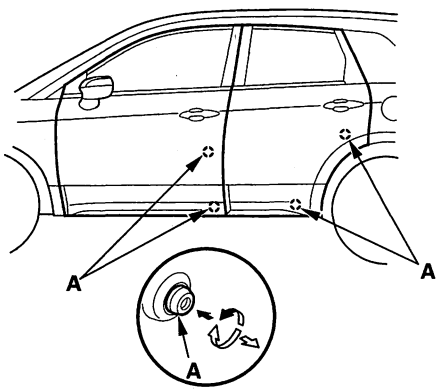


5. Apply touch-up paint to the hinge mounting bolts, and around the hinges.

6. Check for water leaks (see step 7 on page 20-28).

## Front and Rear Door Striker Adjustment

Make sure the door latches securely without slamming it. If necessary, adjust the striker (A): The striker nuts are fixed, but the striker can be adjusted slightly up or down, and in or out.

1. Loosen the screws (B).

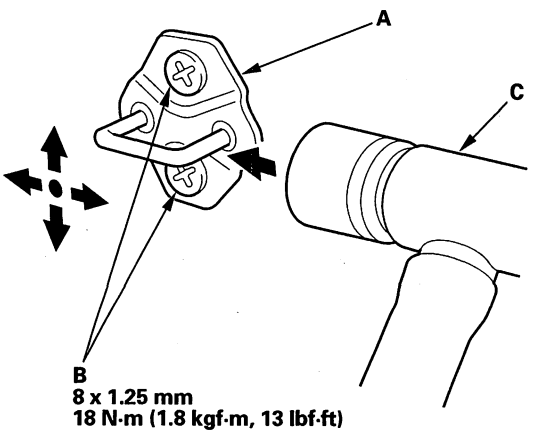


2. Wrap the striker with a shop towel, then adjust the striker by tapping it with a plastic hammer (C). Do not tap the striker too hard.

3. Lightly tighten the screws.

4. Hold the outer handle out, and push the door against the body to be sure the striker allows a flush fit. If the door latches properly, tighten the screws and recheck.



BACK

Protected by AR



## Component Location Index

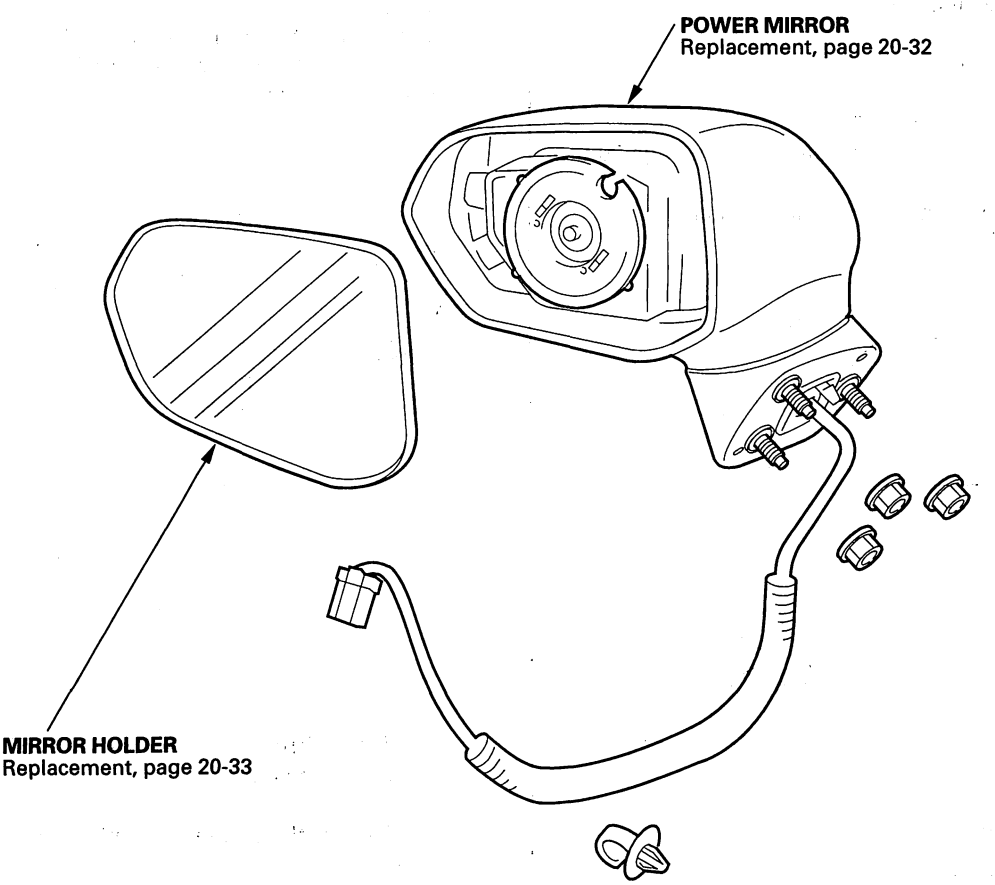


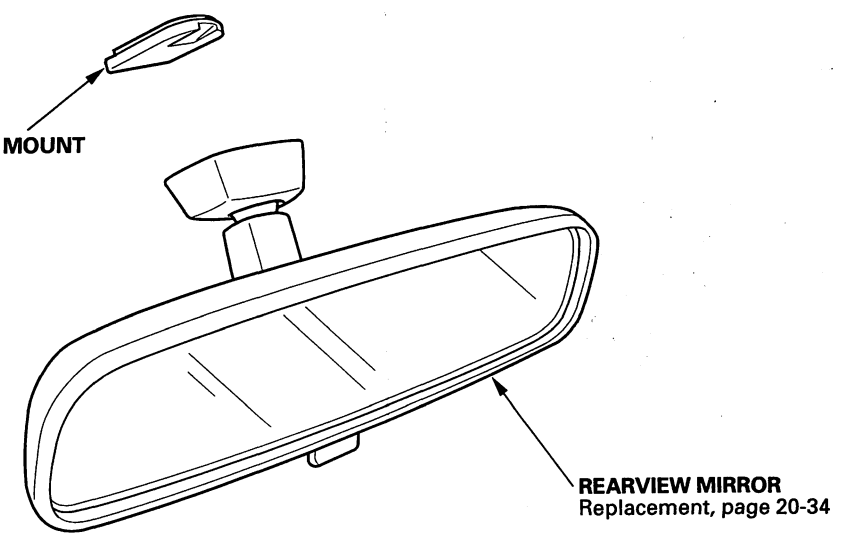

Protected by AR



## Power Mirror Replacement

1. Raise the door glass fully.

2. Remove these items:

   - Door panel (see page 20-6)
   - Plastic cover, as needed (see step 3 on page 20-8)

3. Disconnect the connector (A), and detach the harness clip (B).

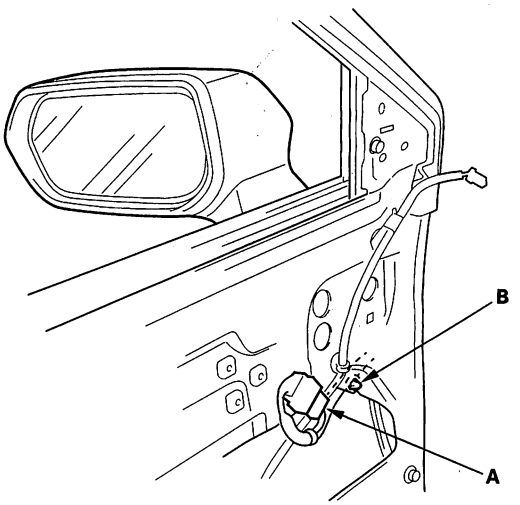


4. Remove the nuts.

**Fastener Locations**

● : Nut, 3

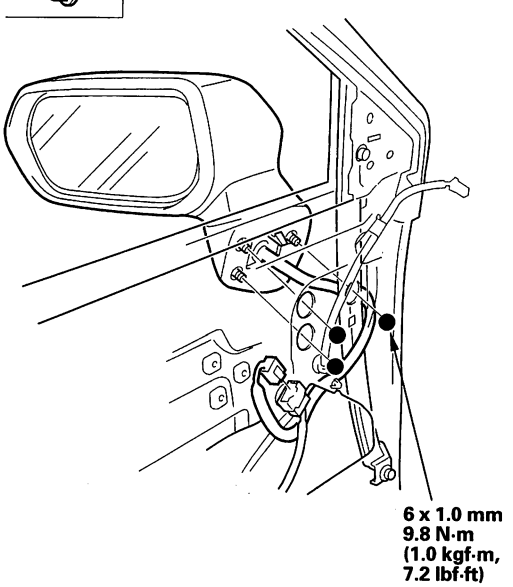


5. While holding the mirror (A), detach the clip (B), then remove the mirror, and pull the harness (C) out through the hole in the door. Take care not to scratch the door.

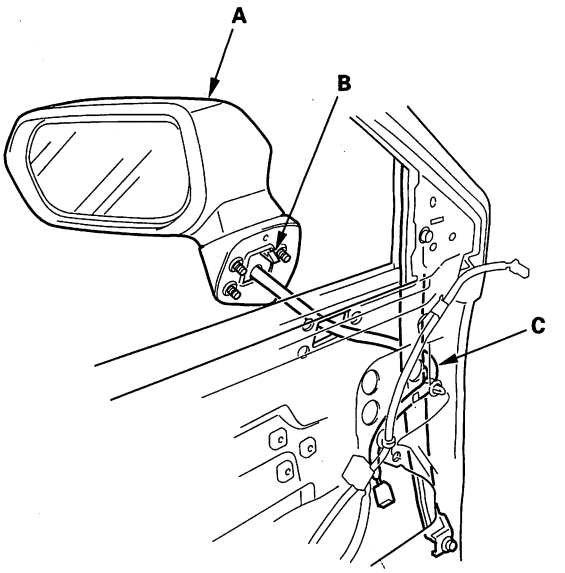


6. Install the mirror in the reverse order of removal, and note these items:

   - Make sure the connector is plugged in properly.
   - When reinstalling the door panel, make sure the plastic cover is installed properly and sealed around its outside perimeter to seal out water.



BACK

Protected by AR

## Mirror Holder Replacement

NOTE: When prying with a flat-tipped screwdriver, wrap it with protective tape to prevent damage.

1. Adjust the mirror fully to the inward position.

2. Insert a long, thin flat-tipped screwdriver in the opening between the lower edge of the mirror holder (A) and the mirror housing (B). Slide the tip of the screwdriver between the mirror holder and the inner holder (C) of the actuator.

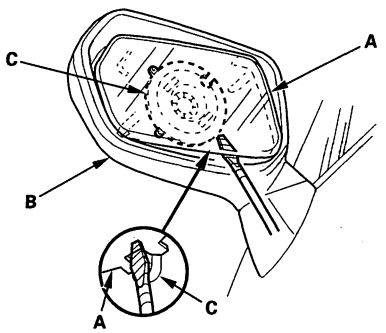


3. Quickly twist the screwdriver to separate the mirror holder from the mirror actuator.

4. Insert the screwdriver further under the mirror holder and twist it again.

   NOTE: Do not pry up on the mirror holder to separate the two parts, as this can cause either the mirror glass or actuator to break.

5. Separate the mirror holder (A) from the actuator (B) by slowly pulling the mirror apart while separating the adhesive (C), and release the hooks (D). Disconnect the mirror defogger connectors from the heater pad terminals.

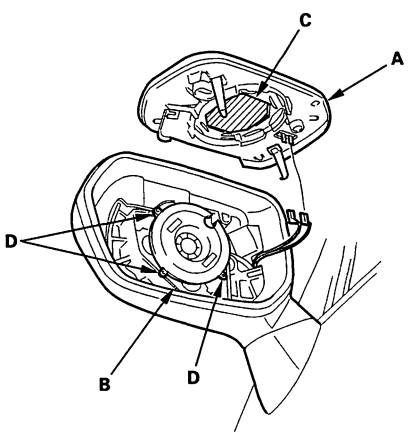


6. Before reinstalling the mirror holder to the inner holder (A) of the actuator, check the actuator rods (B) and the actuator boots (C):

   - If each rod is off the actuator hole, insert it securely.
   - The whole of each rod should be covered with the boot. If not, adjust the boot into proper position.

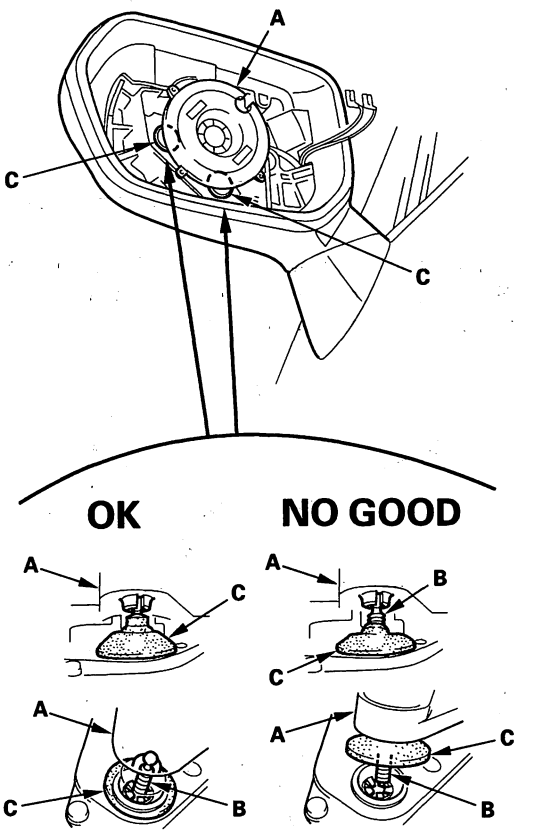


7. Reconnect the mirror defogger connectors.

8. Reattach the hooks of the mirror holder to the actuator, then position the mirror holder on the actuator. Carefully push on the clip portions of the mirror holder until the mirror holder locks into place.

9. Check the actuator operation.

Protected by AR



## Rearview Mirror Replacement

1. Release the hooks (A), then pull the mirror base cover (B) down.

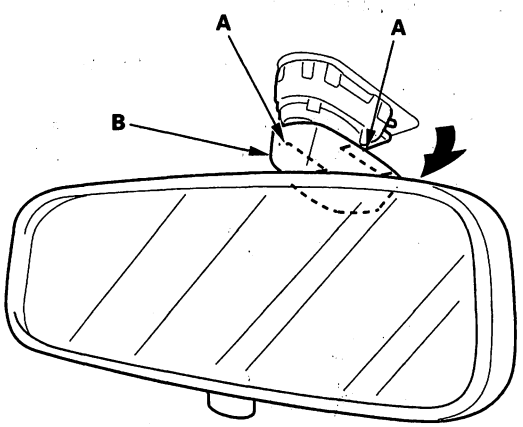


2. Pull the hook (A) down to release it from the mount (B), and slide the mirror base (C) rearward, then remove the rearview mirror (D).

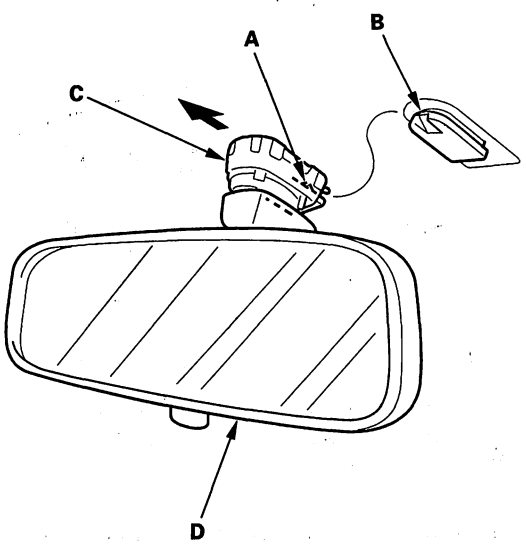


3. Fit the mirror base (A) over the mount (B), and secure the rearview mirror with the spring (C) and hook (D).

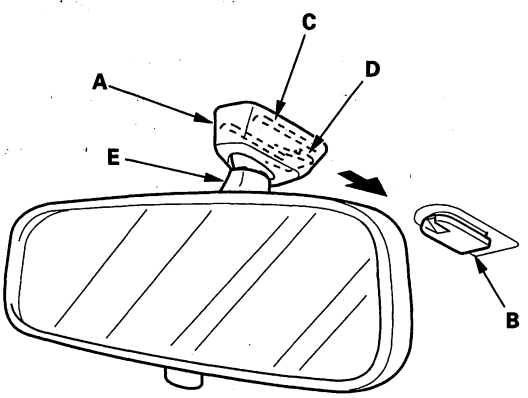


4. Install the mirror base cover (E) on the mirror base securely.



BACK

Protected by AR



## Component Location Index

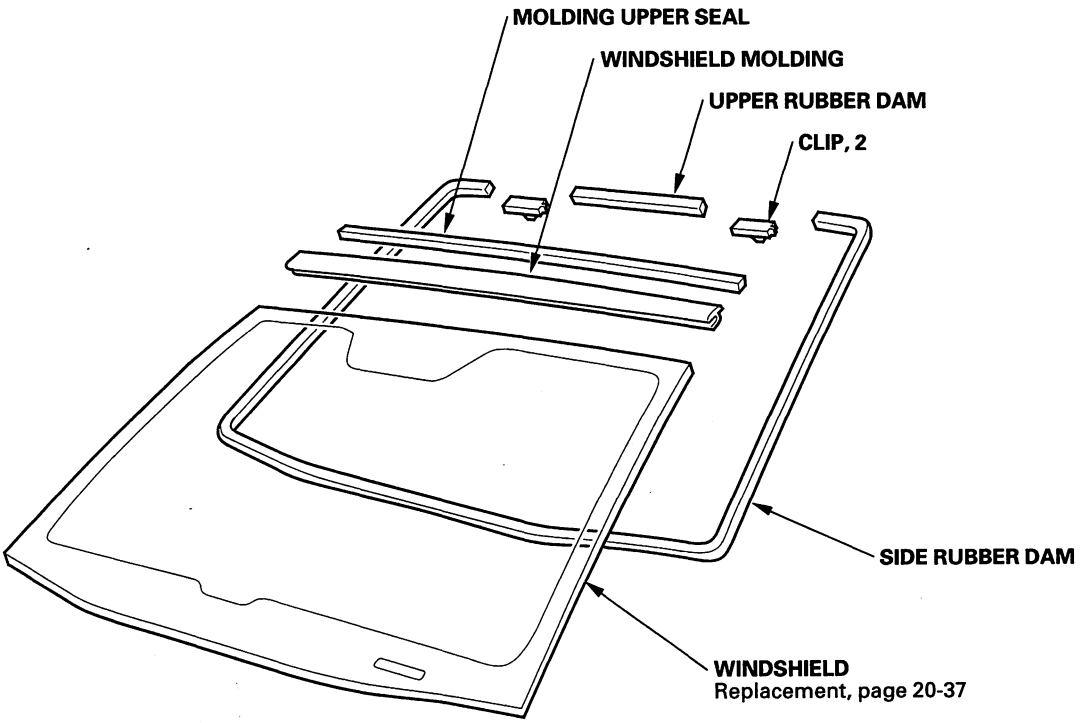


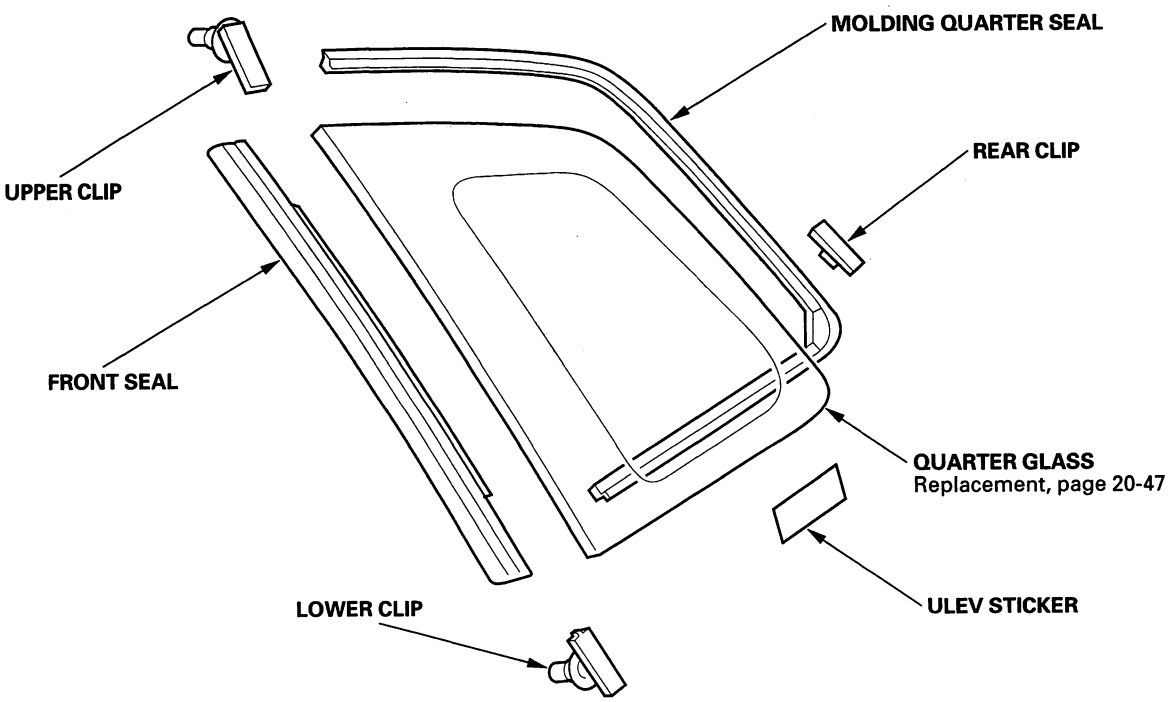


(cont'd)

Protected by AR



## Component Location Index (cont'd)

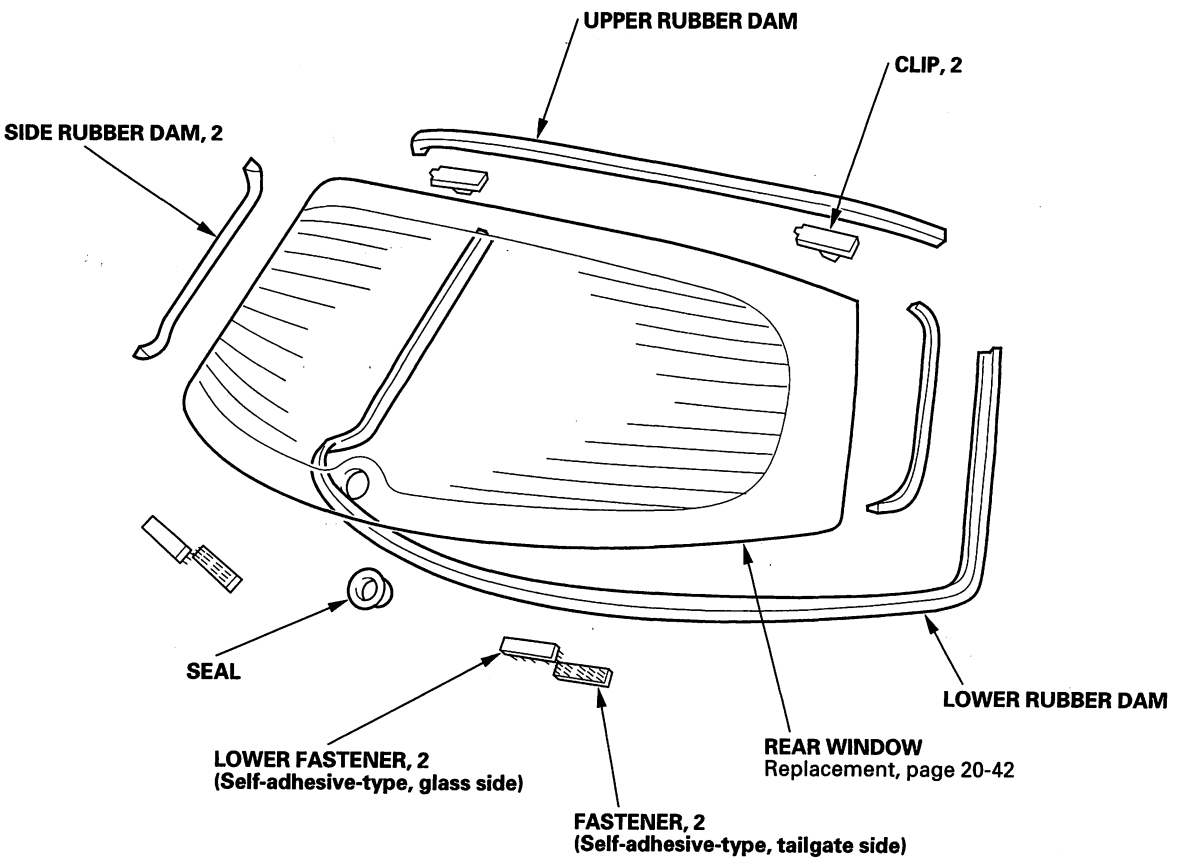




BACK

Protected by AR

## Windshield Replacement

NOTE:
- Put on gloves to protect your hands.
- Wear eye protection while cutting the glass adhesive with a piano wire.
- Use seat covers to avoid damaging the seat.
- When replacing a broken windshield, a commercially available windshield cutter can be efficiently used for cutting the adhesive. For details, follow the instruction of the tool manufacturer.

1. Remove these items:

   - Windshield wiper arms (see page 22-247)
   - Cowl covers (see page 20-163)
   - Rearview mirror (see page 20-34)
   - A-pillar trim, both sides (see page 20-69)
   - Roof moldings (see page 20-169)

2. Remove the molding (A) from the upper edge of the windshield (B). If necessary, cut the molding with a utility knife.

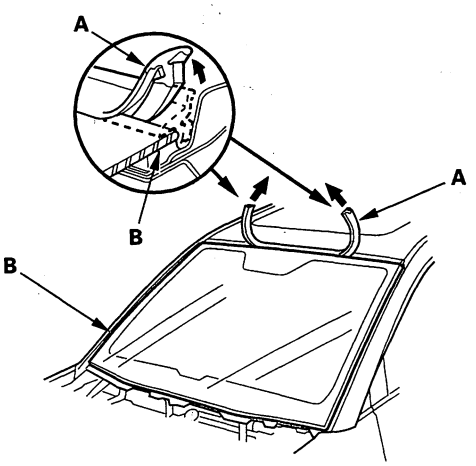


3. If the old windshield will be reinstalled, make alignment marks (A) across the glass and body with a grease pencil.

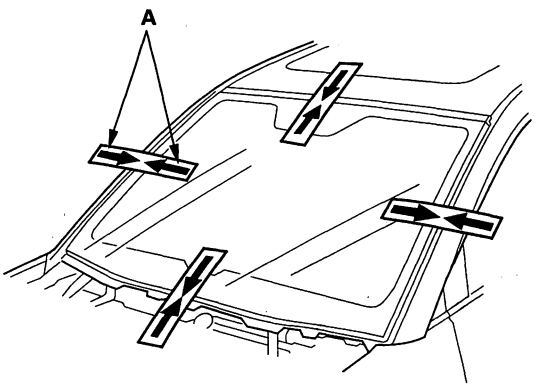


4. Pull down the front portion of the headliner (see page 20-85). Take care not to bend the headliner excessively, or you may crease or break it.

5. Apply protective tape along the edge of the dashboard and body. Using an awl, make a hole through the rubber dam and adhesive from inside the vehicle at the corner portion of the windshield. Push a piece of piano wire through the hole, and wrap each end around a piece of wood.

6. With a helper on the outside, pull the piano wire (A) back and forth in a sawing motion. Hold the piano wire as close to the windshield (B) as possible to prevent damage to the body and dashboard. Carefully cut through the rubber dam and adhesive (C) around the entire windshield.

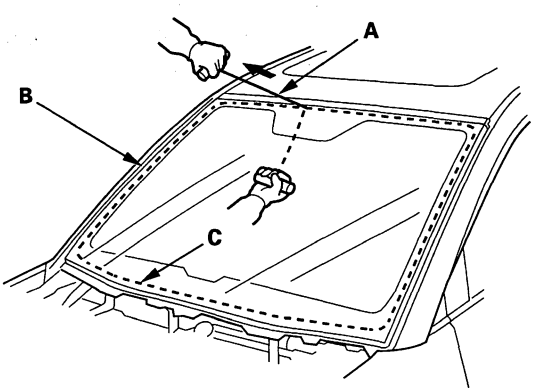


(cont'd)

Protected by AR



## Windshield Replacement (cont'd)

**Cutting positions**

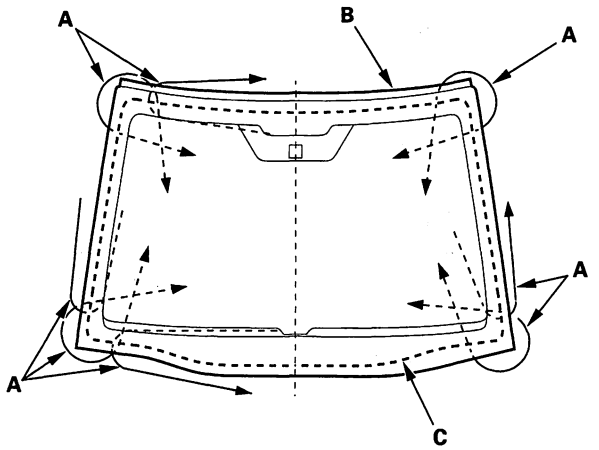


7. Carefully remove the windshield.

8. With a knife, scrape the old adhesive smooth to a thickness of about 2 mm (0.08 in.) on the bonding surface around the entire windshield opening flange:

   - Do not scrape down to the painted surface of the body; damaged paint will interfere with proper bonding.
   - Remove the rubber dam and clips from the body.

9. Clean the body bonding surface with a sponge dampened in alcohol. After cleaning, keep oil, grease and water from getting on the clean surface.

10. If the old windshield will be reinstalled, use a putty knife to scrape off the old adhesive, the clips and the rubber dam from the windshield. Clean the inside face and the edge of the windshield with alcohol where new adhesive will be applied. Make sure the bonding surface is kept free of water, oil, and grease.

11. Attach the upper rubber dam (A), side rubber dam (B), and clips (C) with adhesive tape to the inside face of the windshield (D) as shown:

    - Be sure the rubber dam and clips line up with the alignment marks (E).
    - Be sure the convex portion (F) of the left and right clips toward left.
    - Be careful not to touch the windshield where adhesive will be applied.

    **Rubber dams adhesive tape:**
    **Thickness 0.16 mm (0.006 in.)**
    **Width 3.5 mm (0.14 in.)**
    **Clips adhesive tape:**
    **Thickness 0.4 mm (0.016 in.)**
    **Width 10 mm (0.39 in.)**

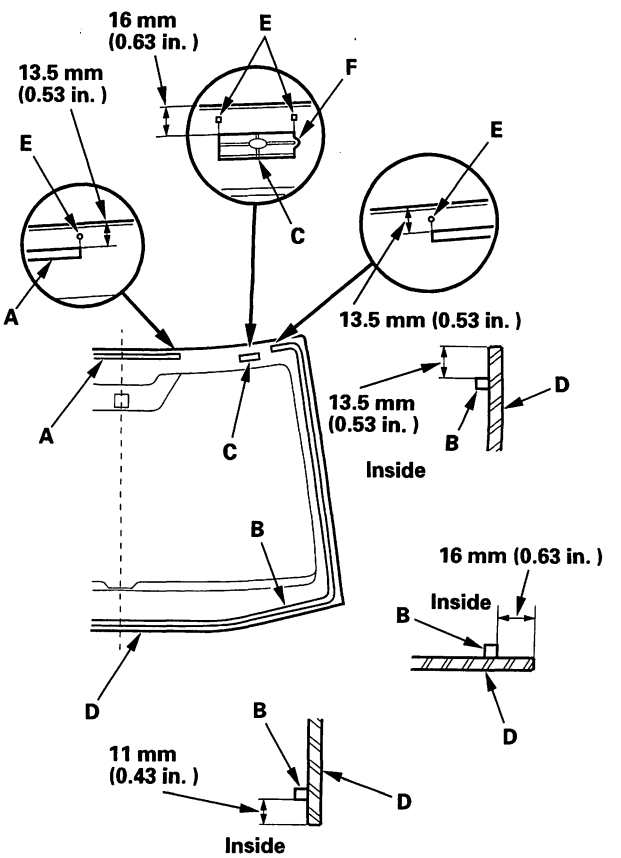




BACK

Protected by AR

12. Attach the molding (A) with adhesive tape (B) to the upper edge of the windshield (C). Be careful not to touch the windshield where the adhesive will be applied.

**Molding adhesive tape: Thickness 0.8 mm (0.03 in.)**
**Width 4 mm (0.16 in.)**

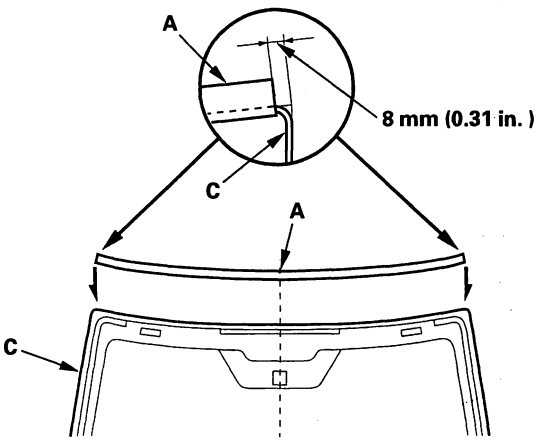


13. Apply primer to the molding (A), then attach the molding upper seal (B) with adhesive tape to the inside surface of the molding as shown.

**:Apply primer here.**

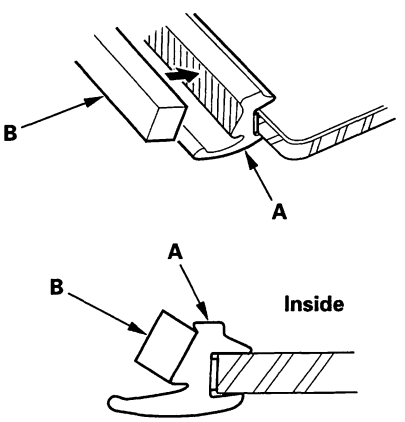


14. Set the windshield in the opening, and center it. Make alignment marks (A) across the windshield and body with a grease pencil at the four points shown. Make sure both clips (B) contact with the edge of the body holes. Be careful not to touch the windshield where adhesive will be applied.

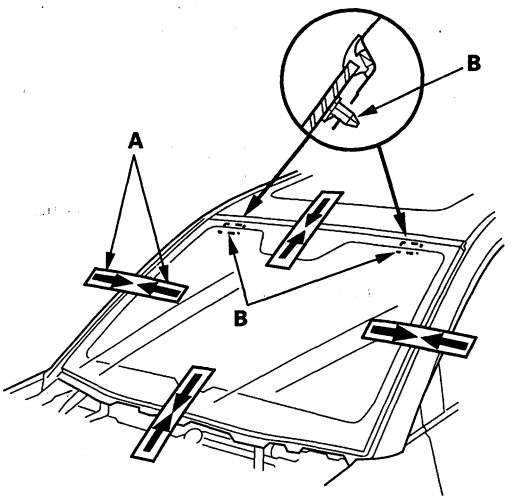


15. Remove the windshield.

(cont'd)

Protected by AR



## Windshield Replacement (cont'd)

16. With a sponge, apply a light coat of glass primer around the edge of the windshield (A) between the dams (B) and molding (C) as shown, then lightly wipe it off with gauze or cheesecloth:

    - Apply glass primer to the molding.
    - Do not apply body primer to the windshield, and do not get body and glass primer sponges mixed up.
    - Never touch the primed surfaces with your hands. If you do, the adhesive may not bond to the windshield properly, causing a leak after the windshield is installed.
    - Keep water, dust, and abrasive materials away from primed surfaces.

    **:Apply glass primer here.**

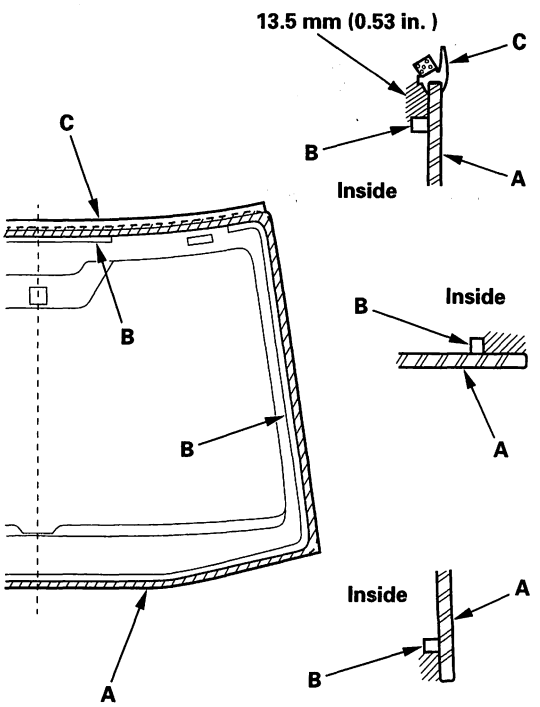


17. With a sponge, carefully apply a light coat of body primer to any exposed paint or metal around the flange where new adhesive will be applied. Let the primer dry for at least 10 minutes:

    - Do not apply body primer to any remaining original adhesive on the flange.
    - Be careful not to mix up the body and glass primer sponges.
    - Never touch the primed surfaces with your hands.
    - Mask off the dashboard before painting the flange.

    **:Apply body primer to exposed paint shown.**

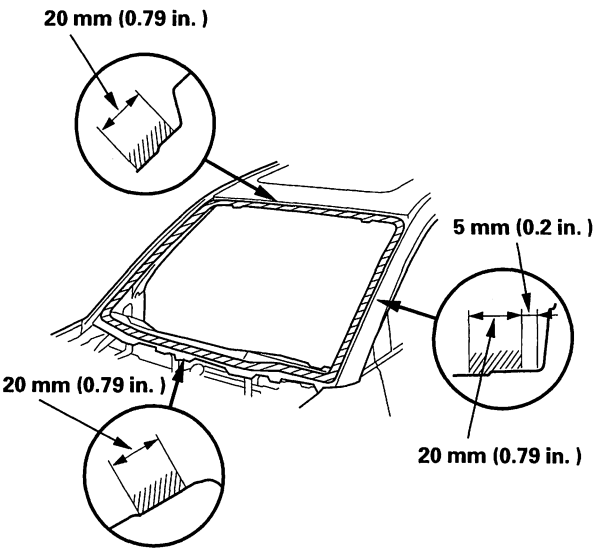




BACK

Protected by AR

18. Cut a "V" in the end of the nozzle (A) as shown.

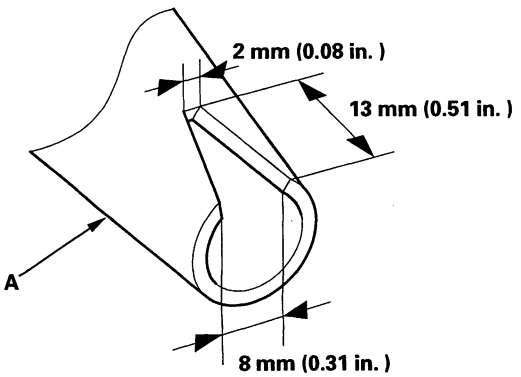


19. Put the cartridge in a caulking gun, and run a bead of adhesive (A) around the edge of the windshield (B) between the dams (C) and molding (D) as shown. Apply the adhesive within 30 minutes after applying the glass primer. Make a slightly thicker bead at each corner.

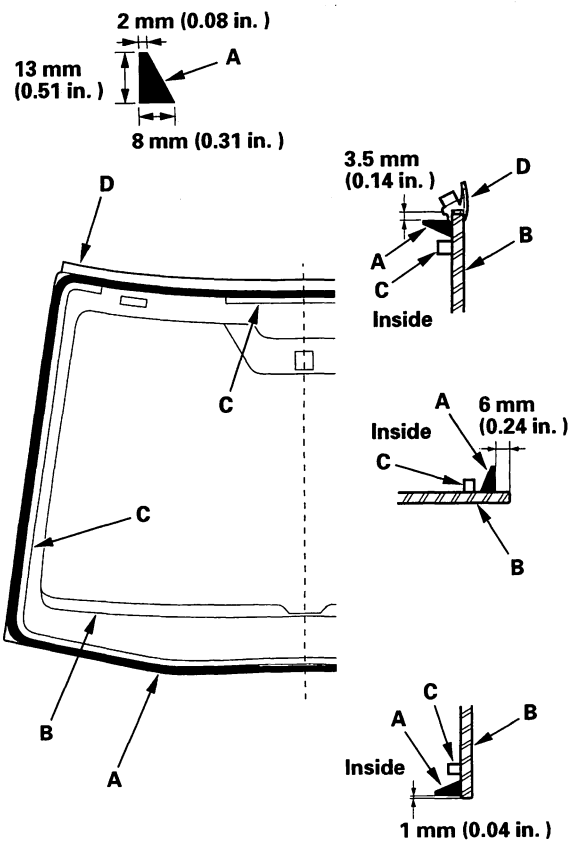


20. Use suction cups to hold the windshield over the opening, align it with the alignment marks made in step 14, and set it down on the adhesive. Lightly push on the windshield until its edges are fully seated on the adhesive all the way around.

    NOTE: Do not open or close the doors until the adhesive is dry.

21. Scrape or wipe the excess adhesive off with a putty knife or towel. To remove adhesive from a painted surface or the windshield, wipe with a soft shop towel dampened with alcohol.

22. After the adhesive has dried, then spray water over the windshield and check for leaks. Mark leaking areas, and let the windshield dry, then seal with sealant:

    - Let the vehicle stand for at least 4 hours after windshield installation. If the vehicle has to be used within the first 4 hours, it must be driven slowly.
    - Keep the windshield dry for the first hour after installation.

23. Reinstall all remaining removed parts. Install the rearview mirror after the adhesive has dried thoroughly.

    NOTE: Advise the customer not to do the following things for 2 to 3 days:

    - Slam the doors with all the windows rolled up.
    - Twist the body excessively (such as when going in and out of driveways at an angle or driving over rough, uneven roads).

Protected by AR



## Rear Window Replacement

NOTE:
- Put on gloves to protect your hands.
- Wear eye protection when removing the glass with piano wire.
- Use seat covers to avoid damaging any surfaces.
- Do not damage the rear window defogger grid lines and terminals.

1. Remove these items:
   - Tailgate lower trim panel (see step 4 on page 20-81)
   - Tailgate spoiler Trim (see page 20-172)
   - Rear window wiper arm (see page 22-249)

2. Remove the lower rubber dam (A) from the edge of the rear window. If necessary, cut the rubber dam with a utility knife.

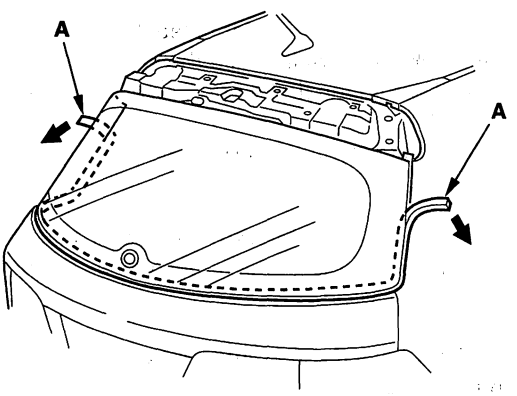


3. Disconnect the rear window defogger connectors (A).

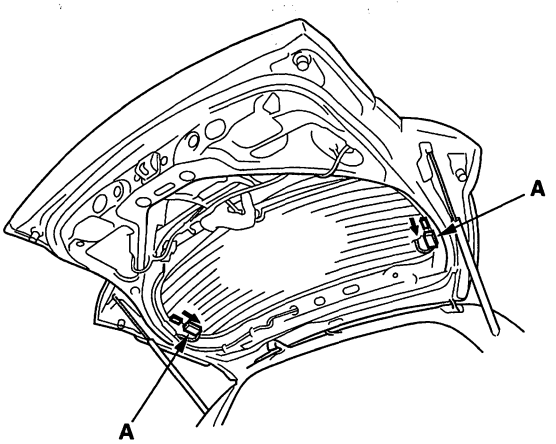


4. If the old rear window is to be reinstalled, make alignment marks (A) across the glass and body with a grease pencil.

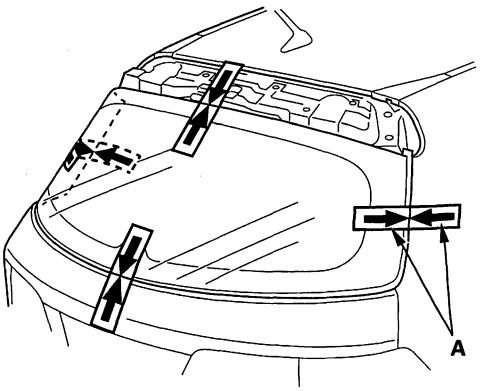


5. Apply protective tape along the inside and outside edges of the tailgate. Using an awl, make a hole through the adhesive from inside the vehicle at the corner portion of the rear window. Push the piano wire through the hole, and wrap each end around a piece of wood.

6. With a helper on the outside, pull the piano wire (A) back and forth in a sawing motion. Hold the piano wire as close to the rear window (B) as possible to prevent damage to the tailgate, and carefully cut through the adhesive (C) around the entire rear window.

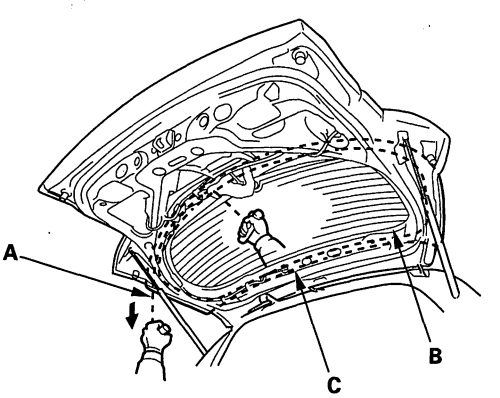




BACK

Protected by AR

**Cutting positions**

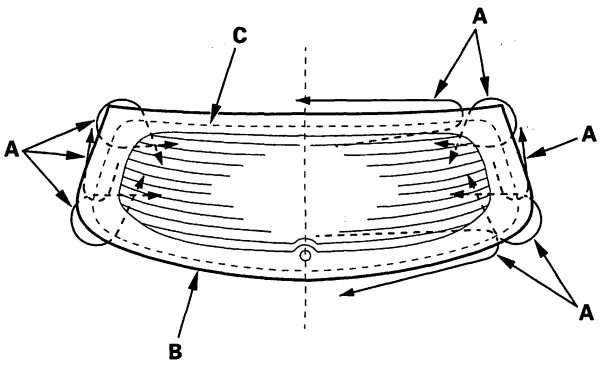


7. Carefully remove the rear window.

8. With a putty knife, scrape the old adhesive smooth to a thickness of about 2 mm (0.08 in.) on the bonding surface around the entire rear window opening flange:

   - Do not scrape down to the painted surface of the body; damaged paint will interfere with proper bonding
   - Remove the fasteners from the tailgate.

9. Clean the tailgate bonding surface with a sponge dampened in alcohol. After cleaning, keep oil, grease and water from getting on the surface.

10. If the old rear window is to be reinstalled, use a putty knife to scrape off all of the old adhesive, the fasteners and the rubber dams from the rear window. Clean the inside face and the edge of the rear window with alcohol where new adhesive is to be applied. Make sure the bonding surface is kept free of water, oil and grease.

11. Attach the clips (A), fasteners (B), upper rubber dam (C), and side rubber dams (D) with adhesive tape to the inside face of the rear window (E) as shown. Before installing the upper and side rubber dams, apply primer to the inside face of the rear window.

    - Be sure the clips, fasteners, and upper rubber dam line up with alignment marks (F).
    - With the printed dots (G) on the rear window as a guide, attach the side rubber dam to both side portions of the rear window.
    - Be careful not to touch the rear window where adhesive will be applied.

(cont'd)

Protected by AR



## Rear Window Replacement (cont'd)

**Clips adhesive tape:**
**Thickness 0.4 mm (0.016 in.)**
**Width 10 mm (0.39 in.)**
**Fasteners adhesive tape:**
**Thickness 0.6 mm (0.024 in.)**
**Width 7.5 mm (0.30 in.)**
**Upper rubber dam adhesive tape:**
**Thickness 0.16 mm (0.006 in.)**
**Width 3 mm (0.12 in.)**
**Side rubber dam adhesive tape:**
**Thickness 0.16 mm (0.006 in.)**
**Width 3 mm (0.12 in.)**

**:Apply primer here.**

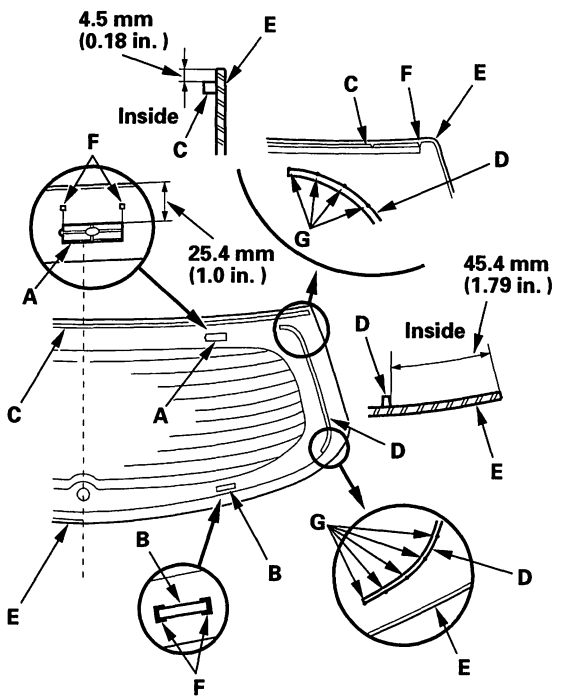


12. Apply primer to the edge of the rear window (A) where the lower rubber dam adhesive tape will be attached as shown. Attach the lower rubber dam (B) with adhesive tape (C) along the edge of the rear window:

- After installing the rubber dam, cut the ends (D) of the rubber dam as shown.
- Be careful not to touch the windshield where adhesive will be applied.

**Lower rubber dam adhesive tape:**
**Thickness 0.4 mm (0.016 in.)**
**Width, lower portions 6 mm (0.24 in.)/**
**side portions 7 mm (0.28 in.)**

**:Apply primer here.**

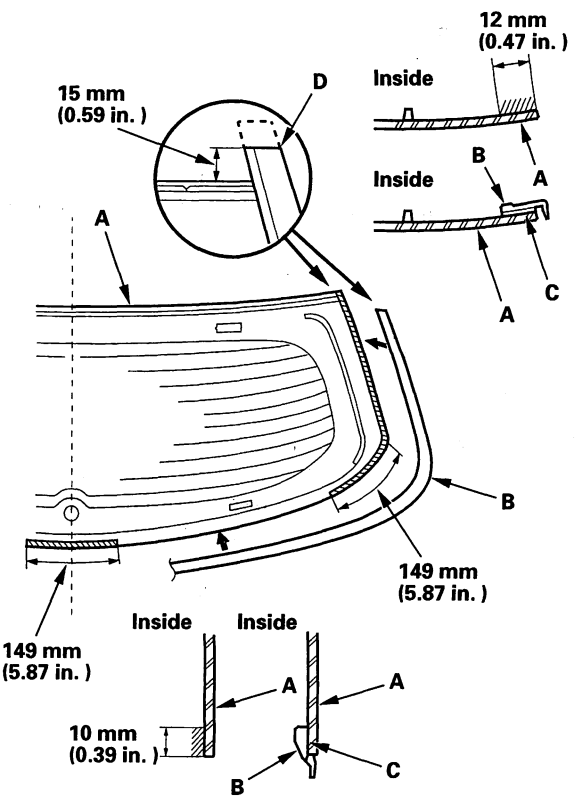




BACK

Protected by AR

13. Glue the fasteners (A) with adhesive tape to the tailgate as shown.

**Fasteners adhesive tape:**
**Thickness 0.6 mm (0.024 in.)**
**Width 9.5 mm (0.37 in.)**

**Fastener Locations**

**▷ : Fastener, 2**

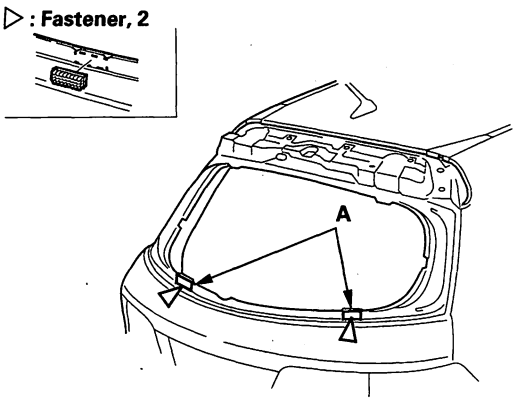


14. If a new glass is used set the rear window (A) in the opening, and center it. Make alignment marks (B) across the rear window and body with a grease pencil at the four points shown. Be careful no to touch the rear window where adhesive will be applied.

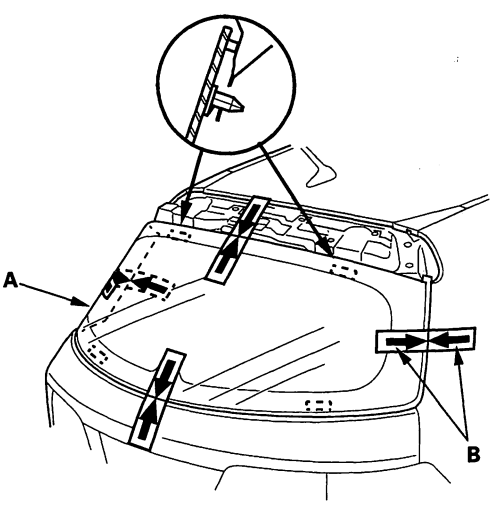


15. Remove the rear window.

16. With a sponge, apply a light coat of glass primer around the edge of the rear window (A) and along the rubber dams (B) as shown, then lightly wipe it off with gauze or cheesecloth:

- Do not apply body primer to the rear window, and do not get tailgate and glass primer sponges mixed up.
- Never touch the primed surfaces with your hands. If you do, the adhesive may not bond to the rear window properly, causing a leak after the rear window is installed.
- Keep water, dust, and abrasive materials away from the primed surface.

**:Apply glass primer here.**

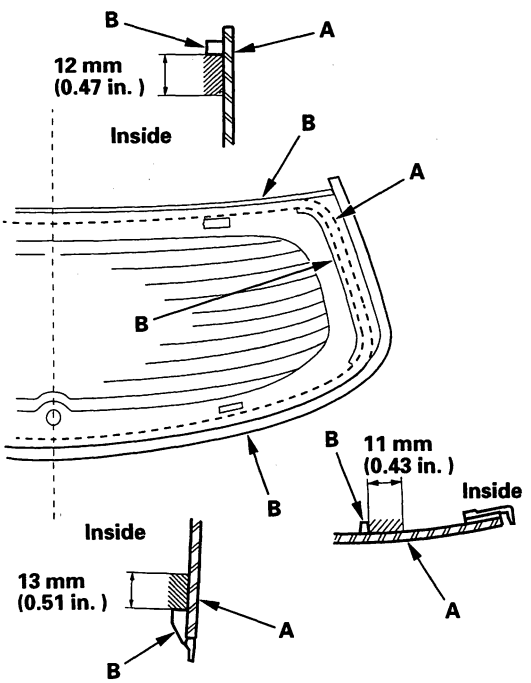


(cont'd)

Protected by AR



## Rear Window Replacement (cont'd)

17. With a sponge, apply a light coat of body primer to the original adhesive remaining around the rear window opening flange. Let the body primer dry for at least 10 minutes:

    - Do not apply body primer to any remaining original adhesive on the flange.
    - Be careful not to mix up the body and glass primer sponges.
    - Never touch the primed surfaces with your hands.

    ////// :Apply body primer here.

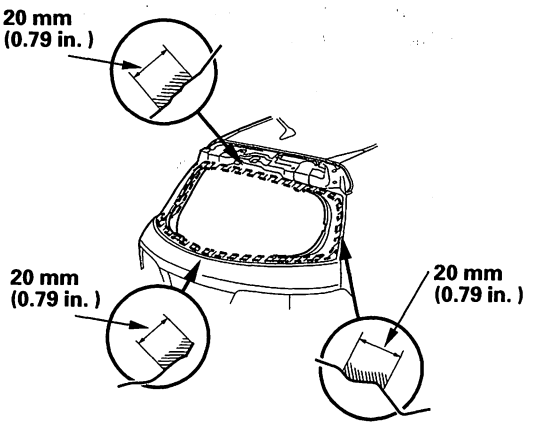


18. Before filling a cartridge, cut a "V" in the end of the nozzle (A) as shown.

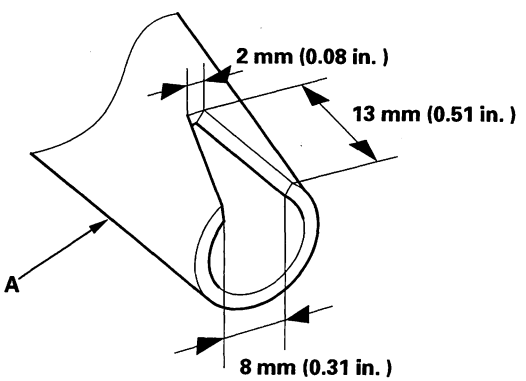


19. Pack adhesive into the cartridge without air pockets to ensure continuous delivery. Put the cartridge in a caulking gun, and run a bead of adhesive (A) on the glass primer trace (B) along the rubber dams (C) as shown.
    Apply the adhesive within 30 minutes after applying the glass primer. Make a slightly thicker bead at each corner.

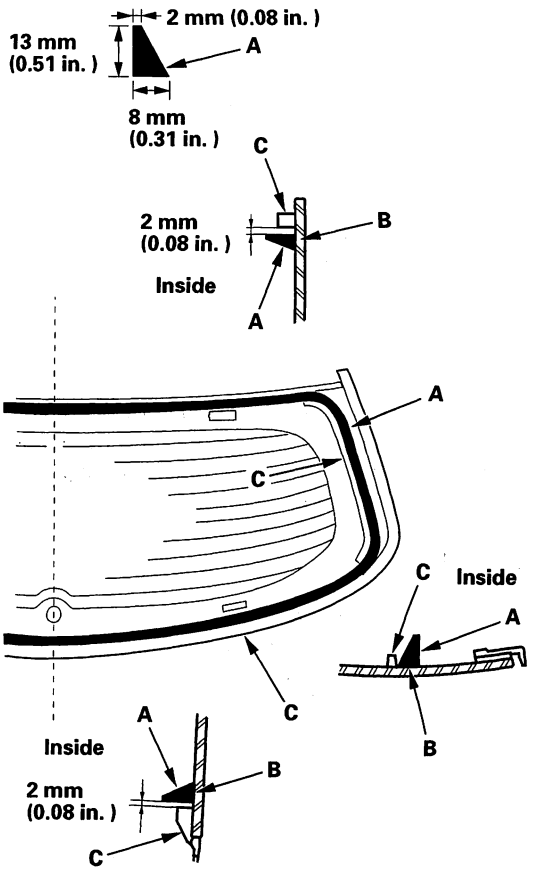




BACK

Protected by AR

20. Use suction cups to hold the rear window over the opening, align it with the alignment marks you made in step 14, and set it down on the adhesive. Lightly push on the rear window until its edges are fully seated on the adhesive all the way around.

    NOTE: Do not open or close any of the doors for about an hour until the adhesive is dry.

21. Scrape or wipe the excess adhesive off with a putty knife or towel. To remove adhesive from a painted surface or the rear window, use a soft shop towel dampened with alcohol.

22. After the adhesive has dried, spray water over the rear window and check for leaks. Mark the leaking areas, let the rear window dry, then seal with sealant. Let the vehicle stand for at least 4 hours after rear window installation. If the vehicle has to be used within the first 4 hours, it must be driven slowly.

23. Reinstall all remaining removed parts.

    NOTE: Advise the customer not to do the following things for 2 to 3 days:
    - Slam the doors with all the windows rolled up.
    - Twist the body excessively (such as when going in and out of driveways at an angle or driving over rough, uneven roads).

## Quarter Glass Replacement

NOTE:
- Put on gloves to protect your hands.
- Wear eye protection when removing the glass with piano wire.
- Use seat covers to avoid damaging any surfaces.

1. Remove these items.

   - Cargo area side trim panel (see page 20-78).
   - Quarter pillar trim (see page 20-75).

2. Remove the front seal (A) and molding quarter seal (B) from the front edge of the quarter glass (C). If necessary, cut the seals with a utility knife.

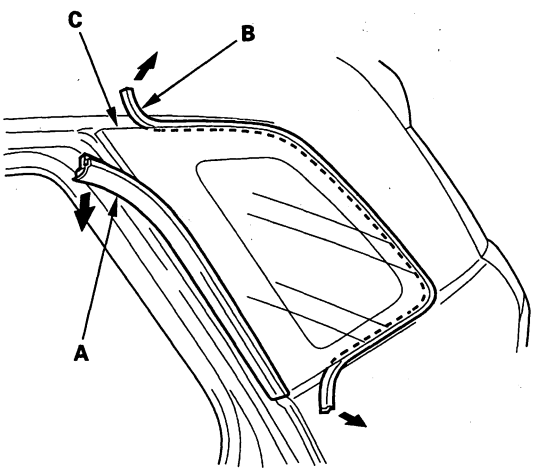


(cont'd)

Protected by AR



## Quarter Glass Replacement (cont'd)

3. Apply protective tape along the inside and outside edges of the body. Using an awl, make a hole through the adhesive from inside the vehicle. Push a piece of piano wire through the hole, and wrap each end around a piece of wood.

4. With a helper on the outside, pull the piano wire (A) back and forth in a sawing motion. Hold the piano wire as close to the quarter glass (B) as possible to prevent damage to the body, and carefully cut through the adhesive (C) around the entire quarter glass.

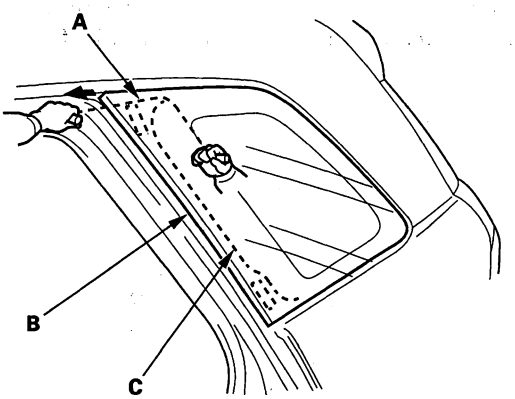


**Cutting positions**

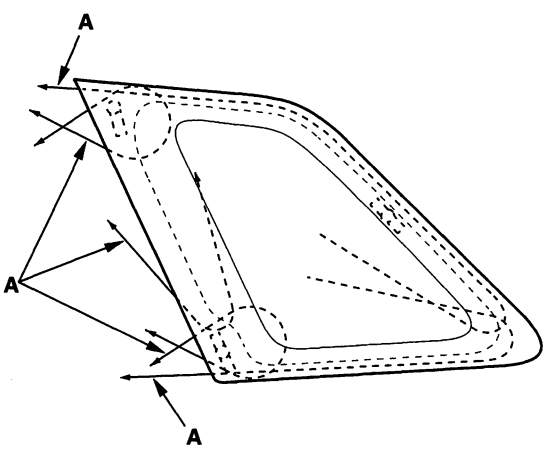


5. Carefully remove the quarter glass.

6. With a putty knife, scrape the old adhesive smooth to a thickness of about 2 mm (0.08 in.) on the bonding surface around the entire quarter glass opening flange:

   - Do not scrape down to the painted surface of the body; damaged paint will interfere with proper bonding.
   - Remove the clips and fastener from the body.

7. Clean the body bonding surface with a sponge dampened in alcohol. After cleaning, keep oil, grease and water from getting on the surface.

8. If the old quarter glass is to be reinstalled, use a putty knife to scrape off all of the old adhesive, and clips from the quarter glass. Clean the inside face and the edge of the quarter glass with alcohol where new adhesive is to be applied. Make sure the bonding surface is kept free of water, oil and grease.



BACK

Protected by AR

9. Set the quarter glass (A) in the opening, and center it. From inside the vehicle, make an alignment mark (B) to the quarter glass where the rear clip will be installed with a grease pencil. Be careful not to touch the glass where adhesive will be applied.

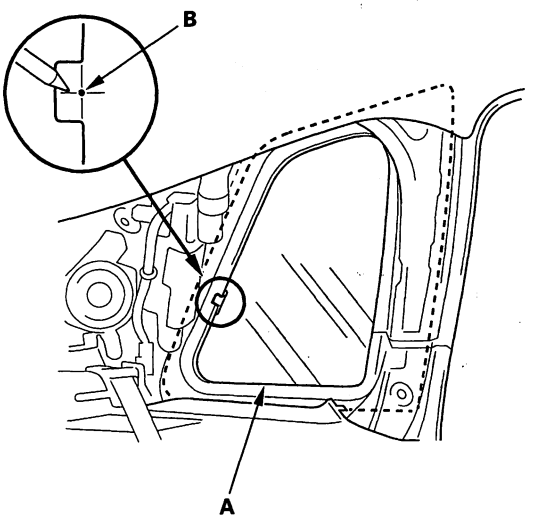


10. Remove the quarter glass.

11. Attach the upper clip (A), lower clip (B), and rear clip (C) with adhesive tape to the inside face of the quarter glass (D) as shown.

- Align the center of the rear clip with the alignment marks (E) you made in step 9.
- Be sure the clips line up with the alignment marks (F).
- Be careful not to touch the quarter glass where adhesive will be applied.

**Upper clip adhesive tape:**
**Thickness 1.3 mm (0.05 in.)**
**Width 10 mm (0.39 in.)**
**Lower clip adhesive tape:**
**Thickness 1.3 mm (0.05 in.)**
**Width 11 mm (0.43 in.)**
**Rear clip adhesive tape:**
**Thickness 0.4 mm (0.016 in.)**
**Width 7.5 mm (0.30 in.)**

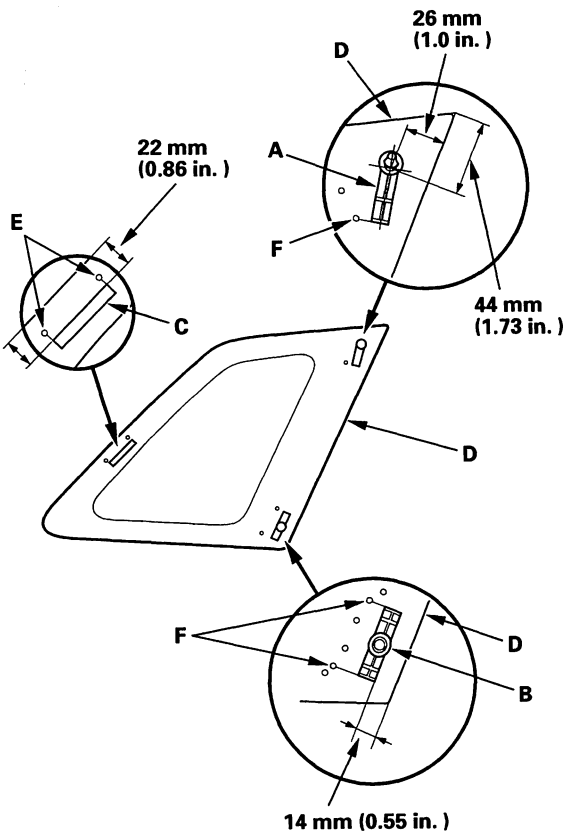


(cont'd)

Protected by AR



## Quarter Glass Replacement (cont'd)

12. Apply primer to the edge of the quarter glass (A) where the molding quarter seal adhesive tape and front seal adhesive tape will be attached as shown. Be careful not to touch the quarter glass where adhesive will be applied.

:Apply primer here.

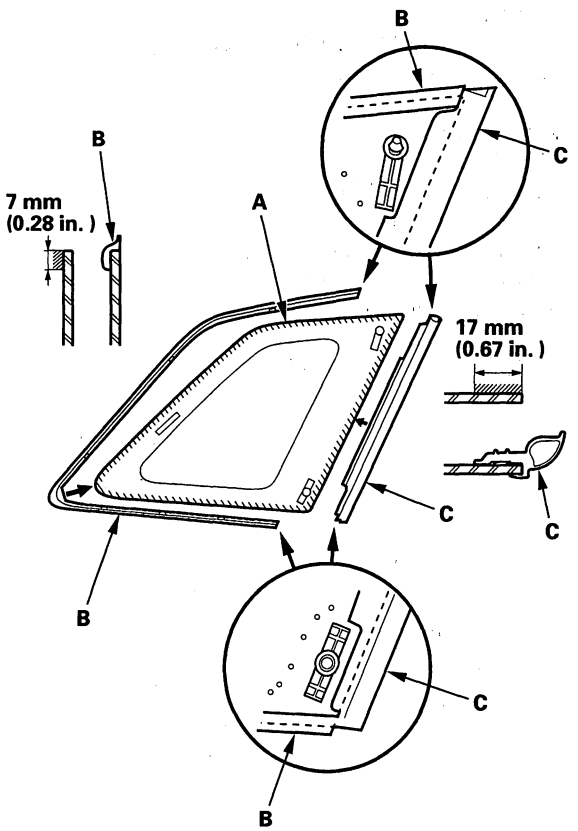


13. Attach the molding quarter seal (B) and front seal (C) with adhesive tape to the inside face of the quarter glass.

- First glue the molding quarter seal to the rear corner portion of the quarter glass, then glue the upper and lower portions of the seal around the edge of the quarter glass. Be sure the upper end and lower end of the molding quarter seal contacts the front seal.
- Be careful not to touch the seals where adhesive will be applied.

**Molding quarter seal adhesive tape:**
**Thickness 0.4 mm (0.016 in.)**
**Width 4 mm (0.16 in.)**
**Front seal adhesive tape:**
**Thickness 0.8 mm (0.03 in.)**
**Width 6 mm (0.24 in.)**



BACK

Protected by AR

14. With a sponge, apply a light coat of glass primer along the edge of the front seal (A) and molding (B) as shown, then lightly wipe it off with gauze or cheesecloth:

    - With the printed dots (C) on the quarter glass (D) as a guide, apply the glass primer to the front portion of the quarter glass.
    - Do not apply body primer to the quarter glass, and do not get body and glass primer sponges mixed up.
    - Never touch the primed surfaces with your hands. If you do, the adhesive may not bond to the quarter glass properly, causing a leak after the quarter glass is installed.
    - Keep water, dust, and abrasive materials away from primed surfaces.

    **:Apply glass primer here.**

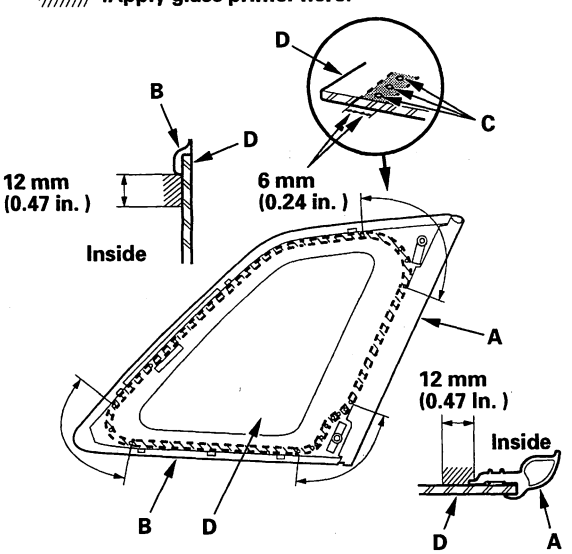


15. With a sponge, carefully apply a light coat of body primer to any exposed paint or metal around the flange where new adhesive will be applied. Let the primer dry for at least 10 minutes:

    - Do not apply body primer to any remaining original adhesive on the flange.
    - Be careful not to mix up the body and glass primer sponges.
    - Never touch the primed surfaces with your hands.

    **:Apply body Primer here.**

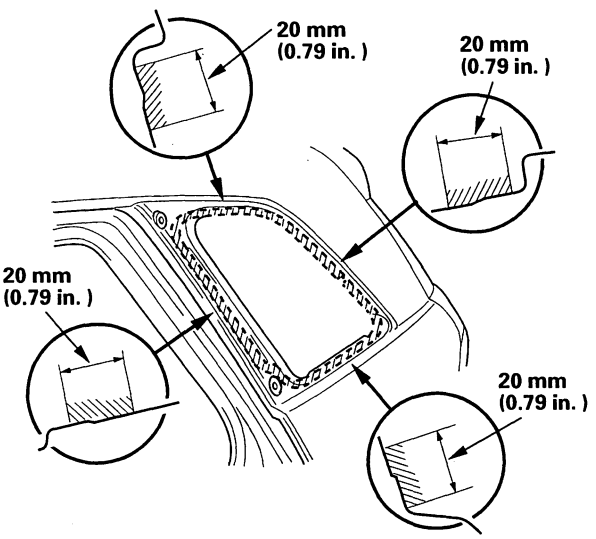


16. Cut a "V" in the end of the nozzle (A) on the adhesive cartridge as shown.

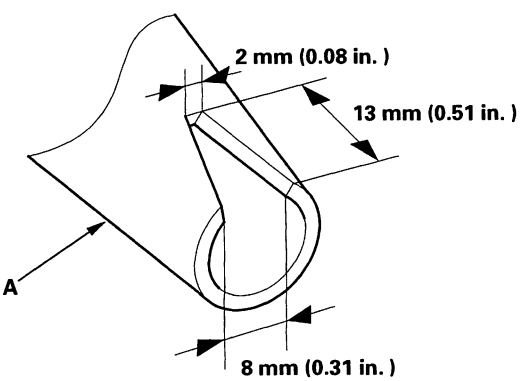


(cont'd)

Protected by AR



## Quarter Glass Replacement (cont'd)

17. Pack adhesive into the cartridge without air pockets to ensure continuous delivery. Put the cartridge in a caulking gun, and run a bead of adhesive (A) along the seals (B) as shown. With the printed dots on the quarter glass (C) as a guide, apply the adhesive to the upper and lower corner portions of the quarter glass. Apply the adhesive within 30 minutes after applying the glass primer. Make a slightly thicker bead at each corner.

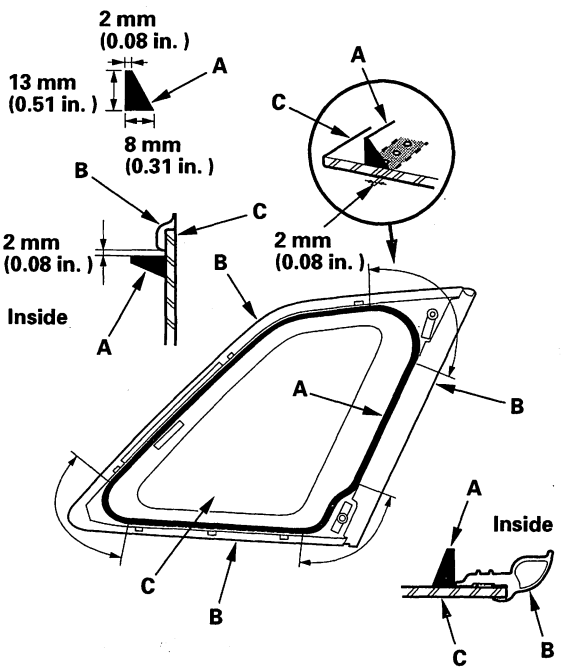


18. Use suction cups (A) to hold the quarter glass (B) over the opening, align it with the clips (C) and set it down on the adhesive. Lightly push on the quarter glass until its edges are fully seated on the adhesive all the way around.

    NOTE: Do not open or close any of the doors for about an hour until the adhesive is dry.

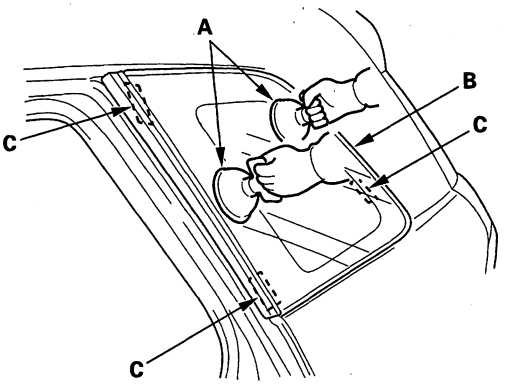


19. Scrape or wipe the excess adhesive off with a putty knife or towel. To remove adhesive from a painted surface or the quarter glass, use a soft shop towel dampened with alcohol.

20. After the adhesive has dried, spray water over the quarter glass and check for leaks. Mark the leaking areas, let the quarter glass dry, then seal with sealant. Let the vehicle stand for at least 4 hours after quarter glass installation. If the vehicle has to be used within the first 4 hours, it must be driven slowly.

21. Reinstall all remaining removed parts.

    NOTE: Advise the customer not to do the following things for 2 to 3 days:
    - Slam the doors with all the windows rolled up.
    - Twist the body excessively (such as when going in and out of driveways at an angle or driving over rough, uneven roads).



BACK

Protected by AR



## Component Location Index

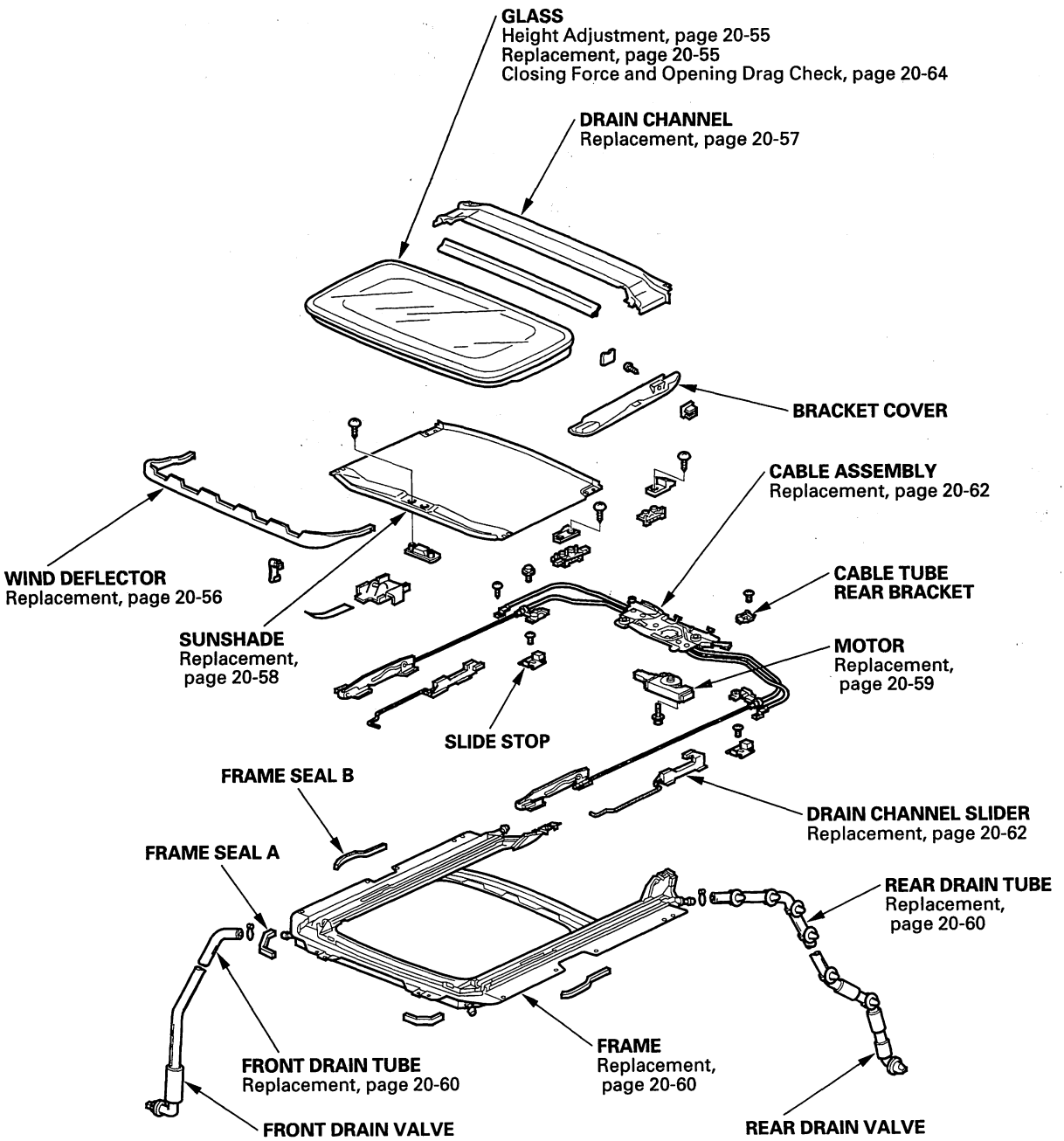

Protected by AR



## Symptom Troubleshooting Index

| Symptom | Diagnostic procedure |
|---|---|
| Water leaks from moonroof | 1. Check for a clogged drain tube.<br>2. Check for a gap between the glass weatherstrip and the roof panel.<br>3. Check for a defective or an improperly installed glass weatherstrip or drain channel.<br>4. Check for a gap between the drain seal and the roof panel.<br>5. Adjust the moonroof height. |
| Wind noise from moonroof | 1. Check for excessive clearance between the glass weatherstrip and the roof panel.<br>2. Adjust the moonroof height. |
| Motor noise from moonroof | 1. Check for a loose motor.<br>2. Check for a worn gear or bearing.<br>3. Check for a deformed cable assembly. |
| Moonroof glass does not move, but motor turns | 1. Check for a defective gear or inner cable.<br>2. Check for foreign matter stuck between the guide rail and the slider.<br>3. Check for a loose inner cable.<br>4. Make sure the cable assembly is attached properly. |
| Moonroof glass does not move and motor does not turn (glass can be moved with moonroof wrench) | 1. Check for a blown fuse.<br>2. Check for a faulty moonroof switch.<br>3. Check for a run down battery.<br>4. Check for a defective motor control unit. |
| Moonroof glass does not stop at proper flush closed position | 1. Reset the moonroof control unit (see page 22-291).<br>2. Check glass height adjustment. |
| Moonroof glass moves in a jerking motion (moves 40 mm (1.57 in.), stops for 0.4 seconds, and repeats) | Reset the moonroof control unit (see page 22-291). |
| During auto close operation, moonroof glass reverses when no object is trapped | Check for dirt and debris in the track. Reset the moonroof control unit (see page 22-291). |
| Moonroof glass moves, but there is no AUTO function | Reset the moonroof control unit (see page 22-291). |



BACK

Protected by AR

## Glass Height Adjustment

The roof panel (A) should be even with the glass weatherstrip (B), to within 0+1/−1 mm (0+0.04/−0.04 in.) all the way around, and should be to length of between the roof panel and glass, to within 13.5+1/−1 mm (0.55+0.04/−0.04 in). If not, make the following adjustment:

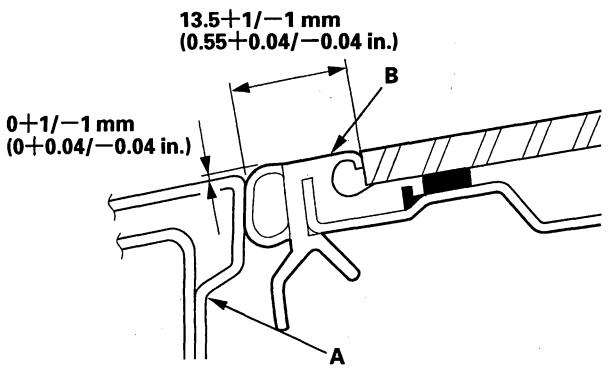


1. Remove the bracket cover.
2. Adjust the glass (A).
   - 1 Using a T25 TORX bit, slightly loosen the bolts.
   - 2 Move the glass up or down and forward or rearward.
   - 3 Tighten all bolts securely.

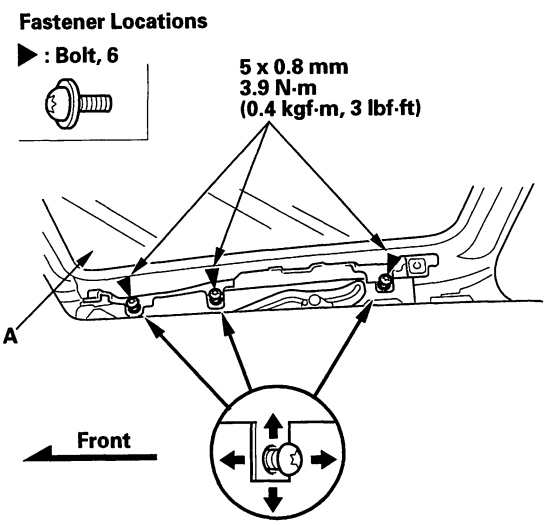


3. If necessary, repeat on the opposite side.

## Glass Replacement

1. Close the glass fully.
2. Slide the sunshade all the way back.
3. Pry out the lid (A), remove the screws (B), and release the hooks (C), then remove both bracket covers (D). With a T25 TORX bit, remove the bolts (E) from both glass brackets (F).

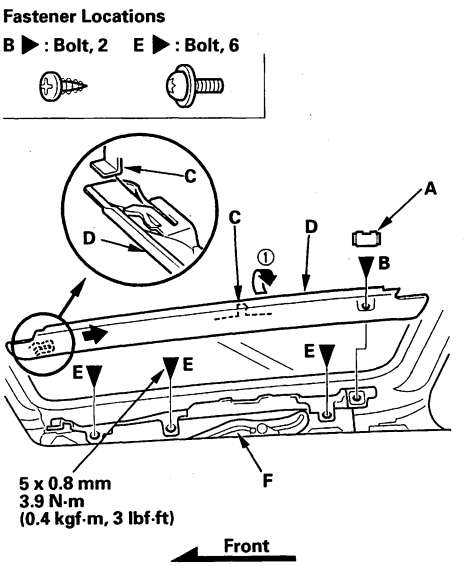


4. Remove the glass (A) by lifting it up. Do not damage the roof panel.

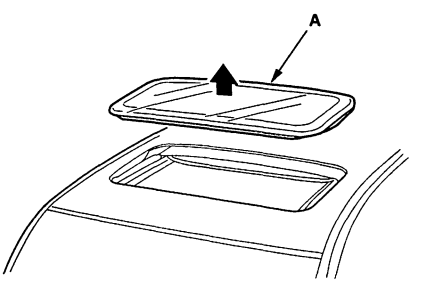


5. Install the glass in the reverse order of the removal, and adjust the glass height alignment.
6. Reset the moonroof control unit (see page 22-291).
7. Check for water leaks. Use free-flowing water from a hose without a nozzle. Do not use high-pressure water.

   NOTE: It is normal for some water to seep past the moonroof into the moonroof frame, and exit through the drains.

Protected by AR



## Wind Deflector Replacement

1. Open the glass fully.
2. Remove the links (A) from both sides.

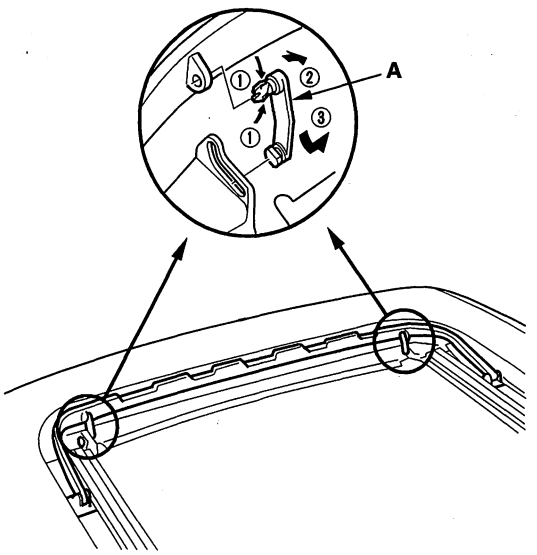


3. Remove the wind deflector (A).

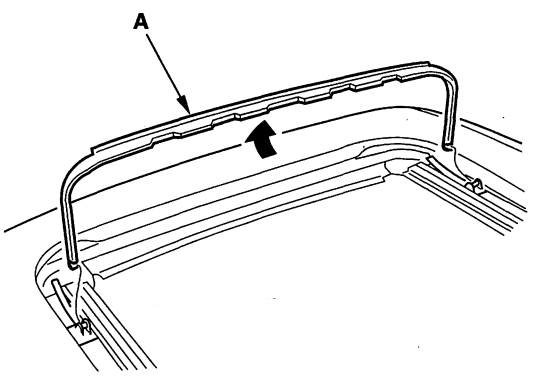


4. Pry up on the deflector bases (A) and release the hooks (B), then remove the bases with springs (C) from both sides by sliding the base forward.

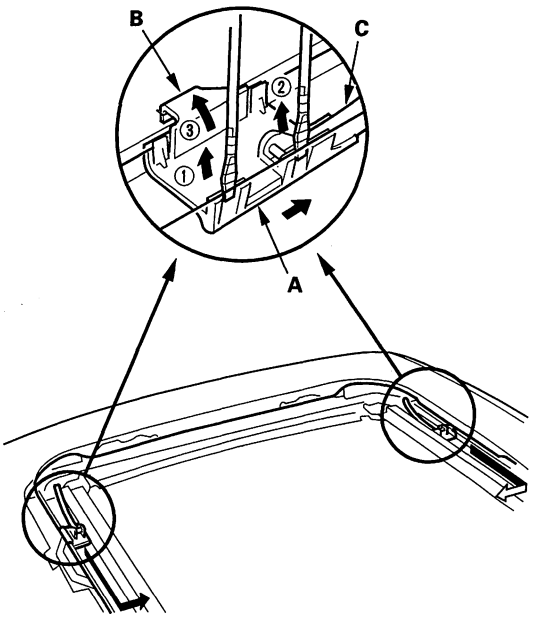


5. Install the deflector in the reverse order of removal.
6. Reset the moonroof control unit (see page 22-291).



BACK

Protected by AR

## Drain Channel Replacement

1. Remove the glass (see page 20-55).

2. With the moonroof wrench, move both glass brackets (A) to the position where the moonroof normally tilts up and disconnect the drain channel rods (B) on both sides.

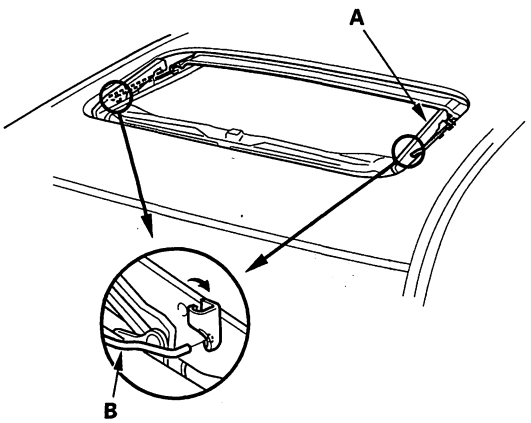


3. Slide the drain channel (A) forward.

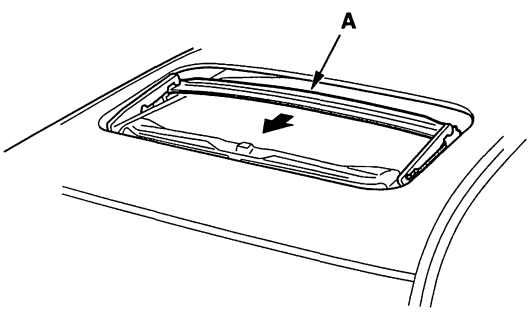


4. Pull the rear edge of the drain channel (A) up while pushing both clips (B), and release the channel from both hooks (C) of the drain channel slider by pulling it rearward.

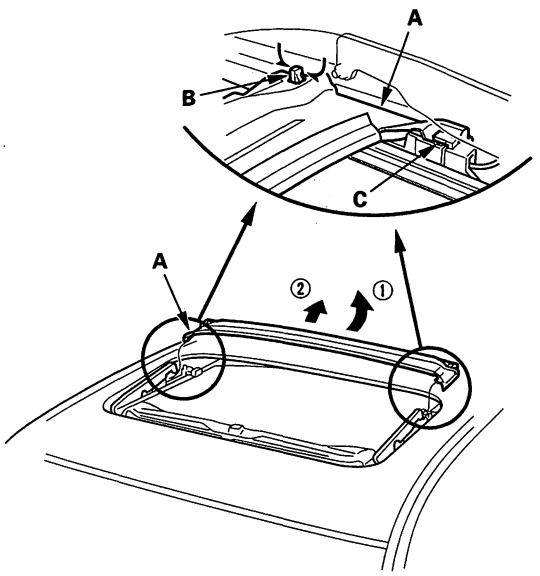


5. Remove the drain channel.

6. Install the channel in the reverse order of removal, and note these items:

   - Push the clip portions into place securely.
   - Check the glass height adjustment (see page 20-55).
   - Reset the moonroof control unit (see page 22-291).

7. Check for water leaks. Let the water run freely from a hose without a nozzle. Do not use a high-pressure spray.

Protected by AR



## Sunshade Replacement

1. Remove the drain channel (see page 20-57).
2. Slide the sunshade (A) until you can see both sunshade slider spacers (B).

**Fastener Locations**

▶ : Screw, 4

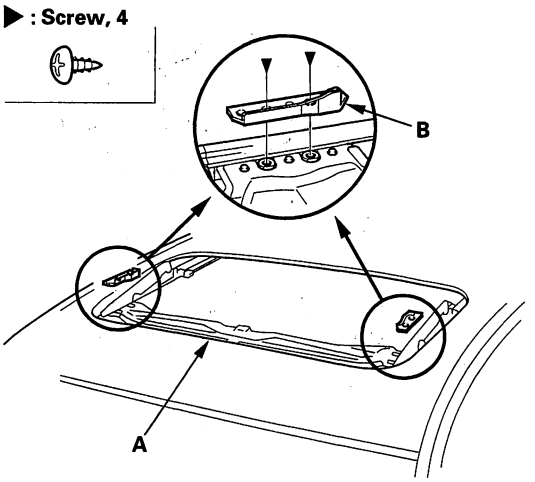


3. Remove the screws, then remove both spacers.

4. While lifting the front portion of the sunshade (A), move the sunshade forward until you can see both sunshade rear hooks (B). Do not damage the sunshade and hooks.

**Fastener Locations**

▶ : Screw, 4

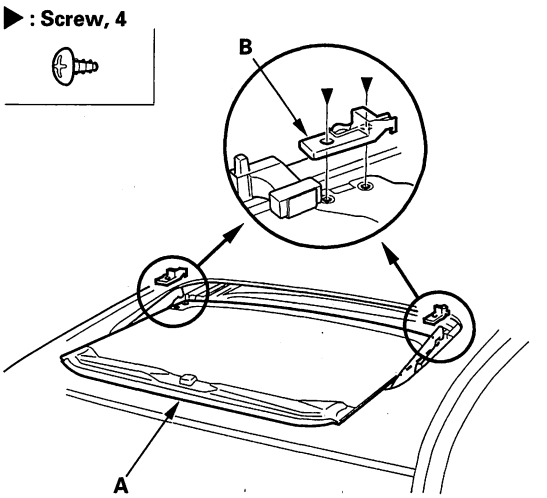


5. Remove the screws, then remove both hooks.



BACK

Protected by AR

6. Remove the sunshade (A).

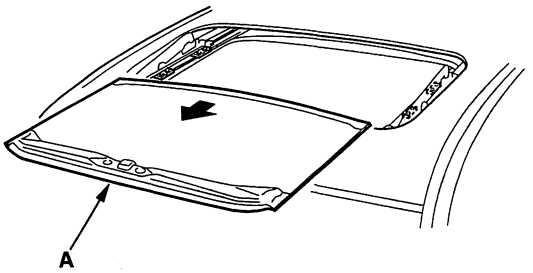


7. Remove both front sunshade base sliders (A) and both rear sunshade base sliders (B).

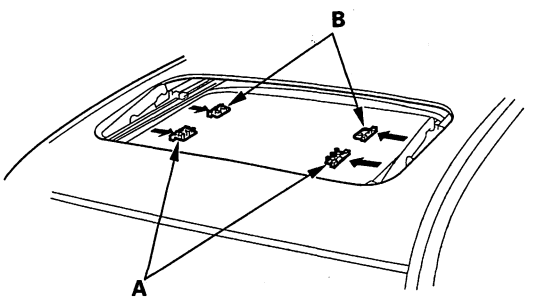


8. Install the sunshade in the reverse order of removal, and check the glass height adjustment (see page 20-55).

9. Check for water leaks. Let the water run freely from a hose without a nozzle. Do not use a high-pressure spray.

## Motor Replacement

1. Remove the headliner (see page 20-85).

2. Put on gloves to protect your hands. Disconnect the connector (A), and remove the screws, then remove the motor (B).

**Fastener Locations**

**▶ : Screw, 3**

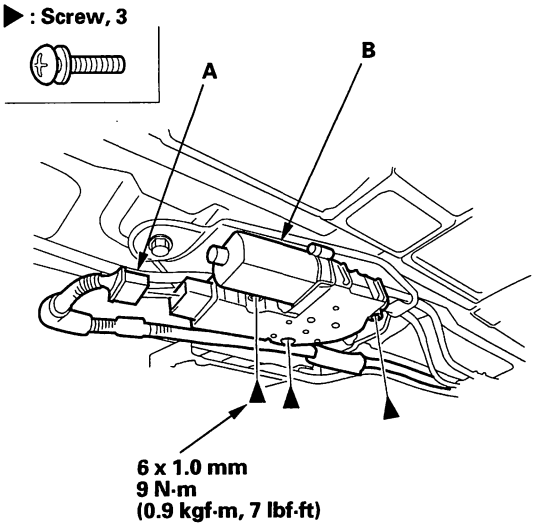


3. Install the motor in the reverse order of removal, and note these items:

- Make sure the connector is plugged in properly.
- Reset the moonroof control unit (see page 22-291).
- Check the motor operation.

Protected by AR



## Frame and Drain Tube Replacement

SRS components are located in this area. Review the SRS component locations (see page 24-12) and the precautions and procedures (see page 24-14) before doing repairs or service.

1. Remove these items:
   - Headliner (see page 20-85)
   - Moonroof glass (see page 20-55)

2. Put on gloves to protect your hands. Disconnect the motor connector (A).

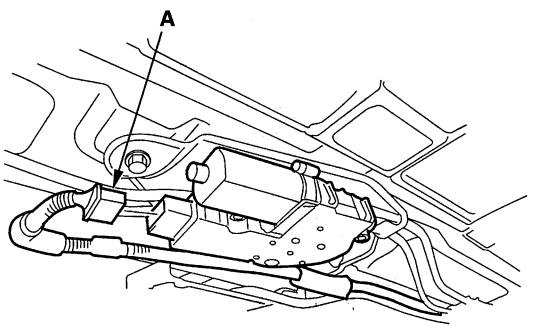


3. Disconnect the drain tubes (A).

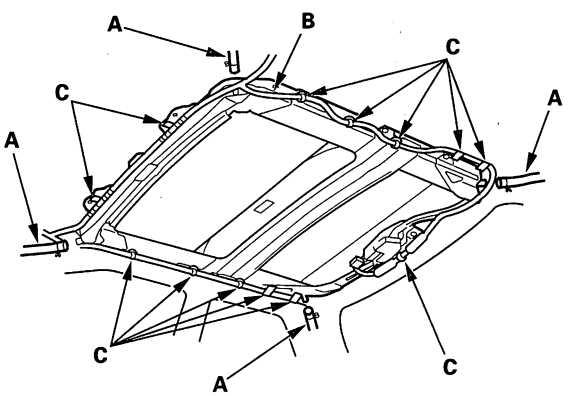


4. Remove the interior harness (B) by detaching the harness clips (C).

5. With an assistant holding the frame (A), remove the bolts, starting at the rear, and release the rear hooks (B) by moving the frame forward.

**Fastener Locations**

**▶ : Bolt, 9**

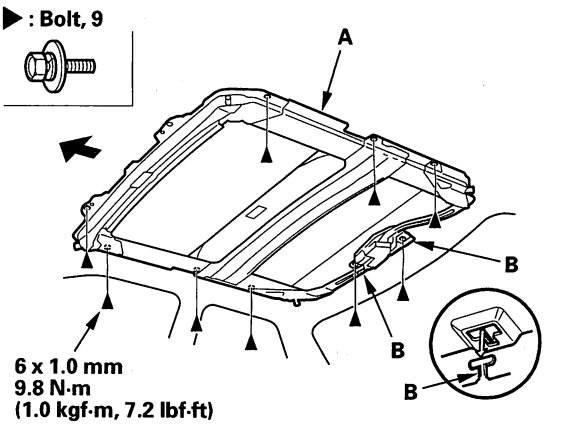


6. With the help of an assistant, carefully remove the frame through the front door opening. Take care not to scratch the interior trim and body, or tear the seat covers.

7. To remove a front drain valve (A) from the body, remove the kick panel, left or right (see step 3 on page 20-67), and the driver's dashboard undercover (see page 20-102) or passenger's dashboard undercover (see page 20-103). Remove the drain tube by pulling it down out of the A-pillar.

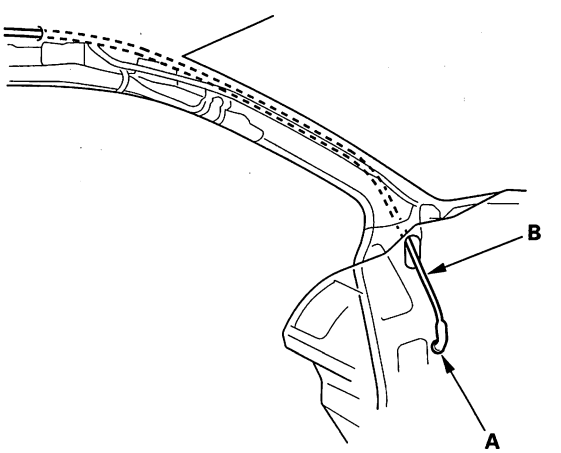




BACK

Protected by AR

8. To remove a rear drain valve (A) from the body, remove these parts:

   - Cargo area floor (see page 20-78)
   - Quarter pillar trim panel (see page 20-75)
   - Cargo area side trim panel (see page 20-76)

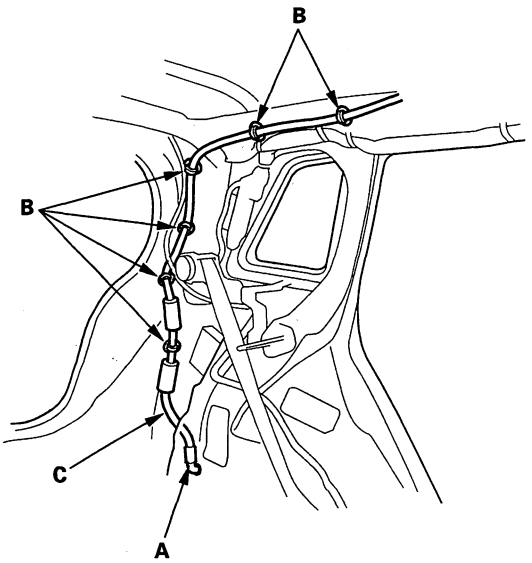


9. Detach the clips (B), then remove the tube (C) by pulling it down out of the pillar.

10. Install the frame and drain tube in the reverse order of removal, and note these items:

    - Before installing the frame, clear the drain tubes and drain valves using compressed air.
    - When installing, tie a string to the top end of the new drain tube and pull it up into the roof.
    - Check the frame seal.
    - Clean the surface of the frame.
    - When installing the frame, first attach the rear hooks into the body holes.
    - Make sure the connectors are plugged in properly.
    - When connecting the drain tube, slide it over the frame nozzle at least 10 mm (0.39 in.).
    - Install the tube clip (A) on the drain tube (B) as shown.

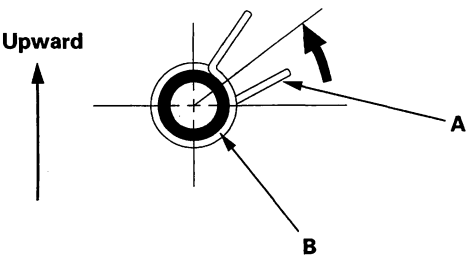


11. Check for water leaks. Let the water run freely from a hose without a nozzle. Do not use a high-pressure spray.

Protected by AR



## Drain Channel Slider and Cable Assembly Replacement

1. Remove the frame (see page 20-60).

2. Remove these parts from the frame:

   - Sunshade (see page 20-58)
   - Moonroof motor (see page 20-59)

3. Put on gloves to protect your hands. Remove the screws (A, B) securing the slide stops (C), and cable tube rear brackets (D), cable tube side bracket mounting bolts (E) and the cable tube mounting screws (F) from both sides of the frame (G).

**Fastener Locations**

**A ▶ : Screw, 2** **B ▶ : Screw, 2** **E ▶ : Bolt, 2**

**F ▶ : Bolt, 2**

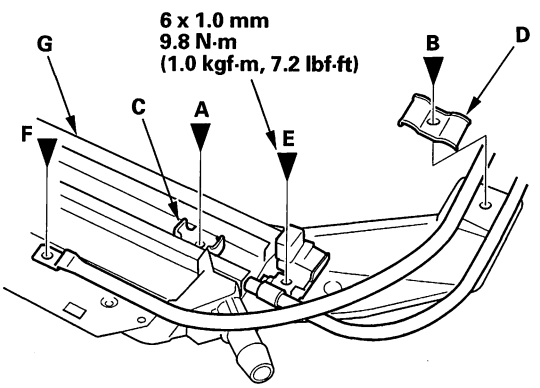


4. Turn both cable tube side brackets (A) up to release the hooks (B) from the holes in both sides of the frame.

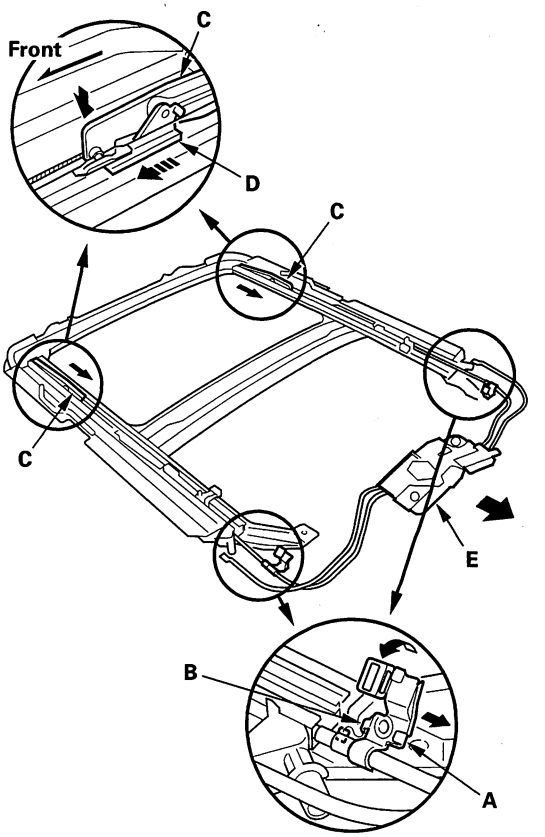


5. Pivot the glass brackets (C) down by sliding the link lifters (D) back, then slide both glass brackets back with the link lifters.

6. Slide the cable assembly (E) half-way.



BACK

Protected by AR

7. Remove the slide stops (A) and the drain channel sliders (B) from both sides.

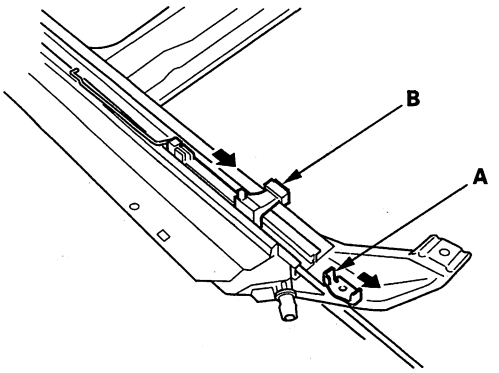


8. Slide the cable assembly (A) and both glass brackets (B) back, remove the deflector sliders (C) from both glass brackets, then remove them from the frame (D).

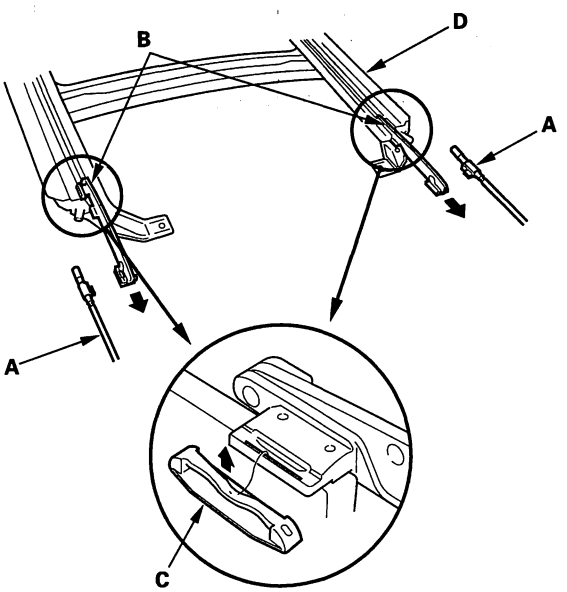


9. Install the slider and cable assembly in the reverse order of removal, and note these items:

- Damaged parts should be replaced.
- Apply multipurpose grease to the glass bracket (A) and guide rail portion of the frame (B) indicated by the arrows.
- Before reinstalling the motor, make sure both link lifters are parallel, and in the fully closed position.
- Before reinstalling the motor, install the frame and glass, then check the opening drag (see page 20-64).
- After reinstalling the motor, reset the moonroof control unit (see page 22-291).

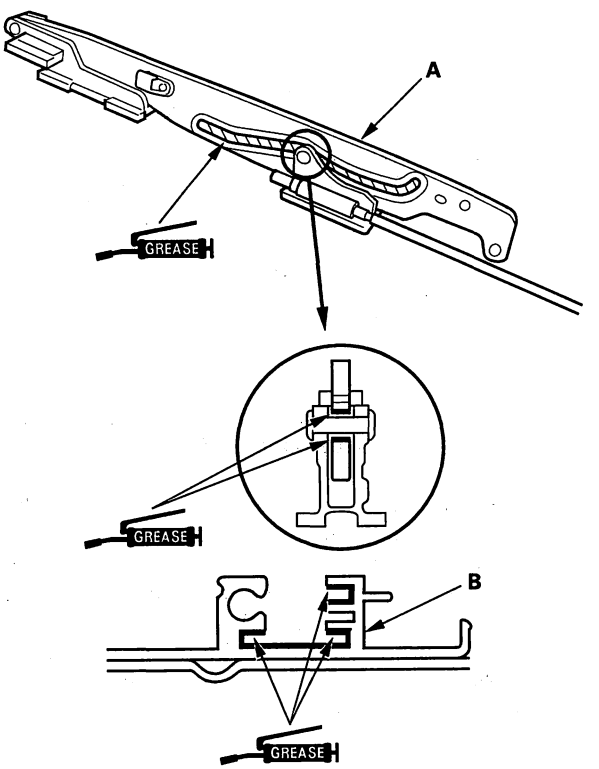

Protected by AR



## Closing Force and Opening Drag Check

1. Remove the headliner (see page 20-85).

2. Closing force check:

   - With a shop towel (A) on the leading edge of the glass (B), attach a spring scale (C) as shown.
   - Have an assistant hold the switch to close the glass while you measure the force required to stop it.
   - Read the force as soon as the glass stops moving, then immediately release the switch and spring scale.

   **Closing force: 200—290 N (20—30 kgf, 44—66 lbf)**

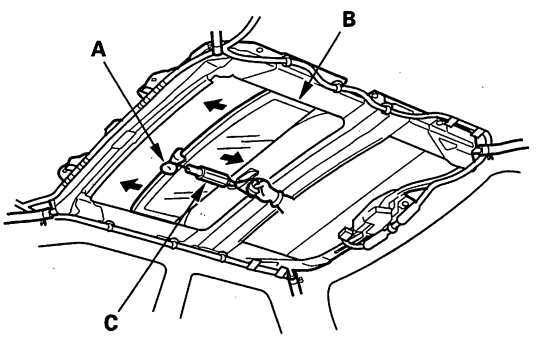


3. If the force in not within specification, remove the moonroof motor (see page 20-59), then check:

   - The gear portion and the inner cable for breakage and damage. If the gear portion is broken, replace the motor. If the inner cable is damaged, remove the frame (see page 20-60), and replace the cable (see page 20-62).
   - The moonroof control unit input test (see page 22-293). If the motor fails to run or doesn't turn smoothly, replace it.
   - The opening drag. Go to step 4.

4. Opening drag check: Protect the leading edge of the glass with a shop towel (A). Measure the effort required to open the glass using a spring scale (B) as shown.

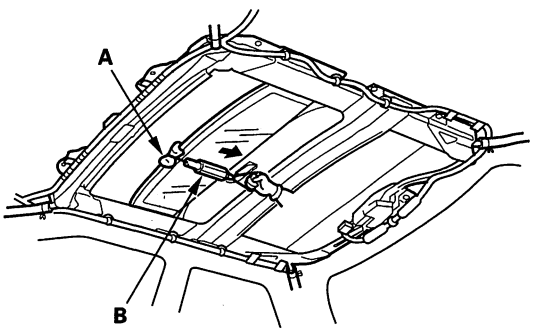


5. If the load is over 40 N (4 kgf, 9 lbf), check:

   - The side clearance and glass height adjustment (see page 20-55).
   - For broken or damaged sliding parts. If any sliding parts are damaged, replace them.



BACK

Protected by AR



## Component Location Index

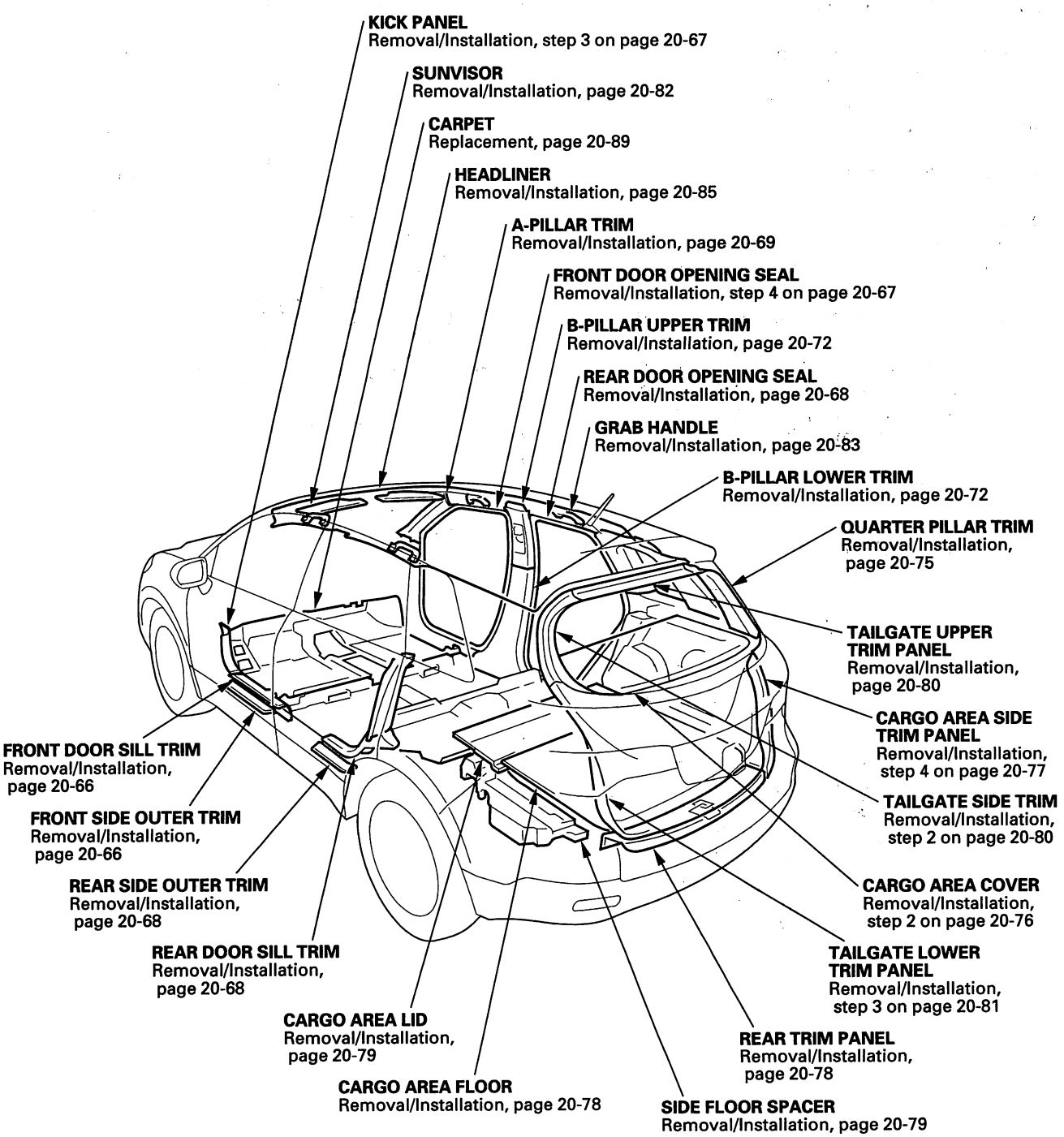


BACK

Protected by AR



## Trim Removal/Installation - Door Areas

**Special Tools Required**
KTC trim tool set SOJATP2014 *
* Available through the American Honda Tool and Equipment Program; call 888-424-6857

SRS components are located in this area. Review the SRS component locations (see page 24-12) and the precautions and procedures (see page 24-14) before doing repairs or service.

### Front Door Sill Area

NOTE:
- Put on gloves to protect your hands.
- Use the appropriate tool from the KTC trim tool set to avoid damage when removing components.
- Take care not to bend or scratch the trim and panels.

1. Detach the hooks (A) and tabs (B) from the kick panel (C) and B-pillar lower trim (D), and pull the front door sill trim (E) up by hand to detach the clips (F, G), then remove it.

**Driver's side**

**Fastener Locations**

F ▷ : Clip, 1 (Gray)  G ▷ : Clip, 3  I ▷ : Clip, 4

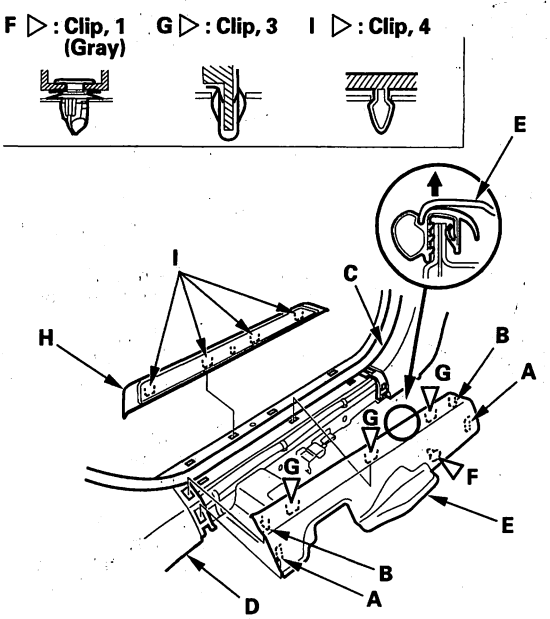


**Passenger's side**

**Fastener Locations**

F ▷ : Clip, 2 (Gray)  G ▷ : Clip, 3  I ▷ : Clip, 3

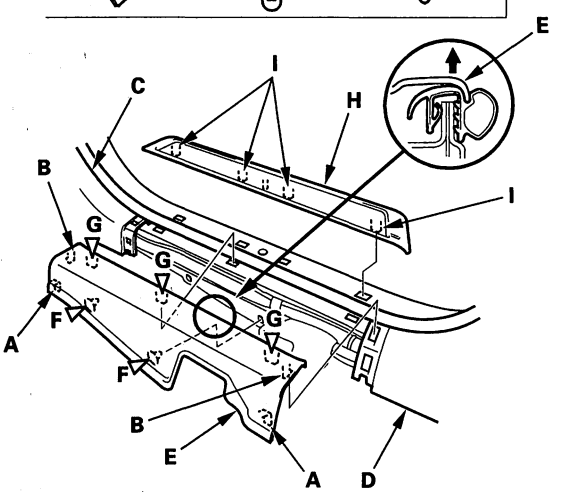


2. If necessary, pull the front side outer trim (H) up to detach the clips (I), then remove the trim.



BACK

Protected by AR

3. Remove the driver's side kick panel (A) or the passenger's side kick panel (B).

   -1 Pull out the door opening seal (C) as needed from the kick panel hooks (D) and the door opening flange.
   -2 Pull the kick panel back by hand to detach the clips then remove it.

**Driver's side**

**Fastener Locations**

▷ : Clip, 2 (Gray)

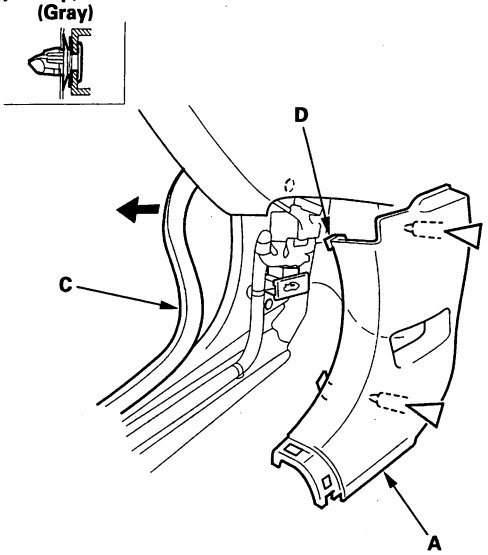


**Passenger's side**

**Fastener Locations**

▷ : Clip, 2 (Gray)

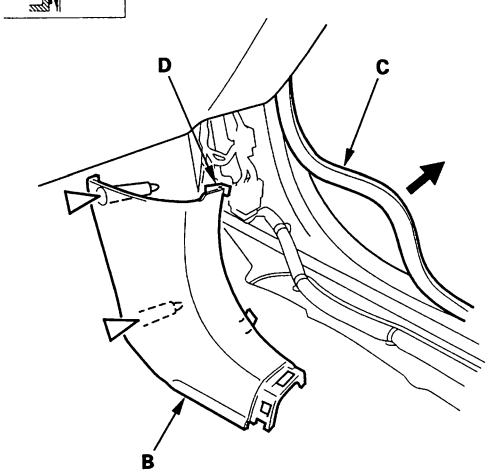


4. Pull out the front door opening seal (A) from the trim hooks (B) and around the front door opening flange, then remove the seal.

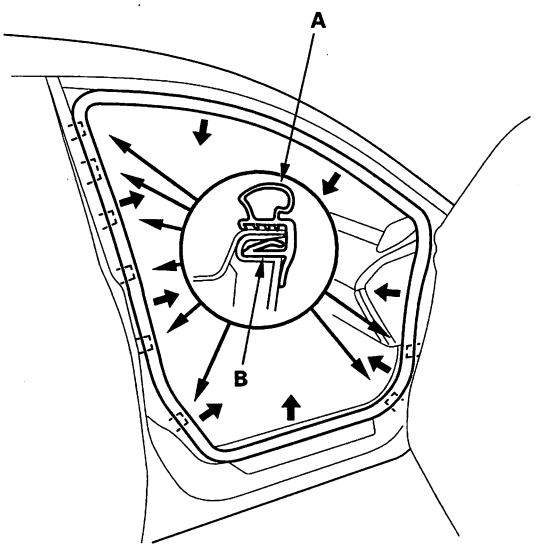


5. Install the trim in the reverse order of removal, and note these items:

   - Check if the clips are damaged or stress-whitened, and if necessary, replace them with new ones.
   - Push the clips and hooks into place securely.

Protected by AR



## Trim Removal/Installation - Door Areas (cont'd)

**Special Tools Required**
KTC trim tool set SOJATP2014 *
* Available through the American Honda Tool and Equipment Program; call 888-424-6857

### Rear Door Sill Area

NOTE:
- Put on gloves to protect your hands.
- Use the appropriate tool from the KTC trim tool set to avoid damage when prying components.
- Take care not to bend or scratch the trim and panels.

1. Tip the front of the rear seat up.

2. Detach the hook (A) and tab (B) from the B-pillar lower trim (C), and pull the rear door sill trim (D) up by hand to detach the clips (E, F), then remove it.

**Fastener Locations**

**E ▷ : Clip, 3 (Gray)** **F ▷ : Clip, 2** **H ▷ : Clip, 2**

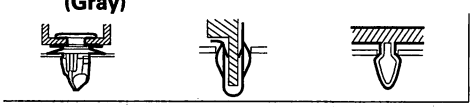

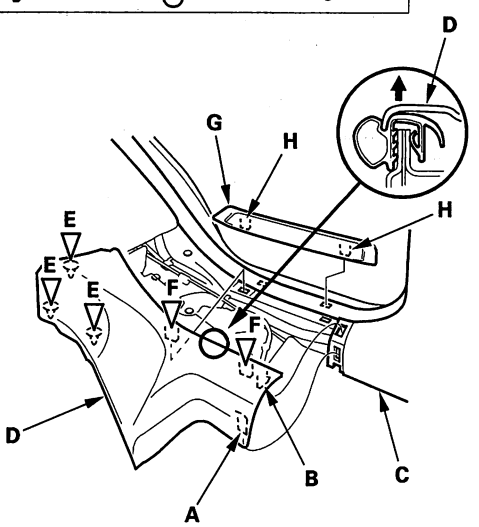


3. If necessary, pull the rear side outer trim (G) up to detach the clips (H), then remove the trim.

4. Pull out the rear door opening seal (A) from the trim hooks (B) and around the front door opening flange, then remove the seal.

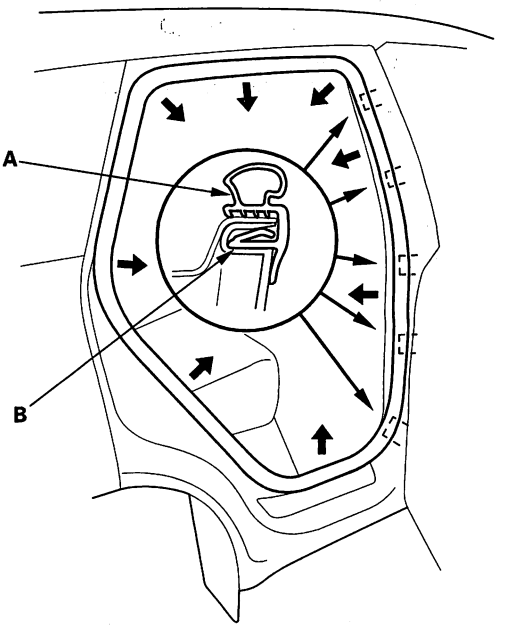


5. Install the trim in the reverse order of removal, and note these items:

   - Check if the clips are damaged or stress-whitened, and if necessary, replace them with new ones.
   - Push the clips and hooks into place securely.



BACK

Protected by AR

# Trim Removal/Installation - Pillar Areas

**Special Tools Required**
KTC trim tool set SOJATP2014 *
* Available through the American Honda Tool and Equipment Program; call 888-424-6857

## A-Pillar Trim

SRS components are located in this area. Review the SRS component locations (see page 24-12) and the precautions and procedures (see page 24-14) before doing repairs or service.

NOTE:
- Follow the A-pillar trim installation procedure carefully; improper installation could cause the side curtain airbags to deploy improperly and possibly cause injury.
- Put on gloves to protect your hands.
- Use the appropriate tool from the KTC trim tool set to avoid damage when prying components.
- Take care not to scratch the trim and panels.
- The upper clip in the A-pillar trim (A) consists of a resin grommet (B) and a metal pin (C). The groove (D) in the grommet secures it to the body panel (E). The shoulder (F) on the grommet is broken during removal, so the clip must be replaced with a new one when the trim is reinstalled.

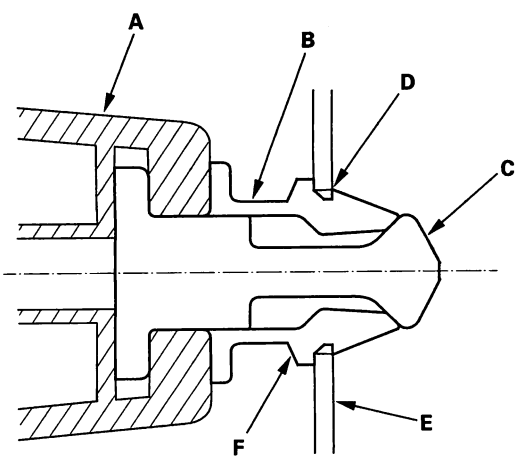


1. Pull the front door opening seal away from the A-pillar as needed (see step 4 on page 20-67).

2. Hit the upper clip A-pillar trim (A) with a rubber mallet. The clip is under the point (B) where the triangle mark (C) on the edge of the trim indicates. Hitting the clip breaks the shoulder (D) on the grommet (E) and pushes the pin (F) and grommet against the body (G).

   NOTE: The clip must be replaced with a new one when the A-pillar trim is reinstalled.

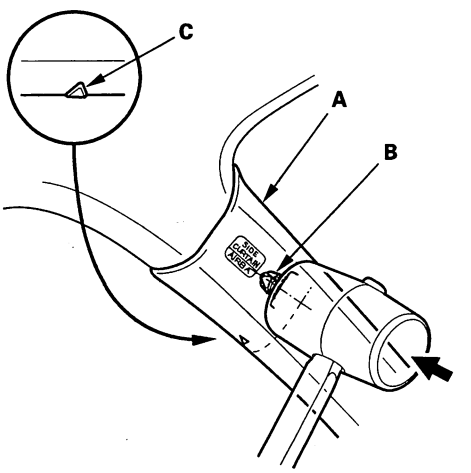


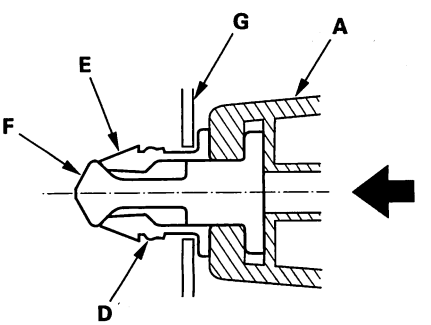


(cont'd)

Protected by AR



## Trim Removal/Installation - Pillar Areas (cont'd)

3. Pull the top of the A-pillar trim (A) back by hand to remove the pin (B) from the grommet (C) remaining in the body (D).

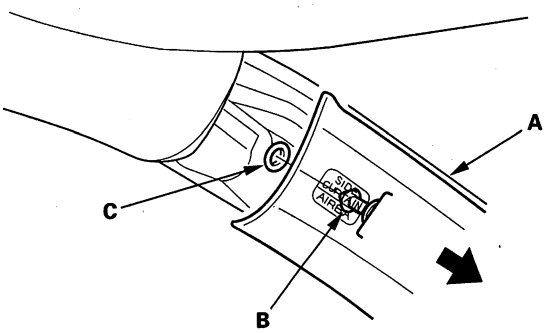


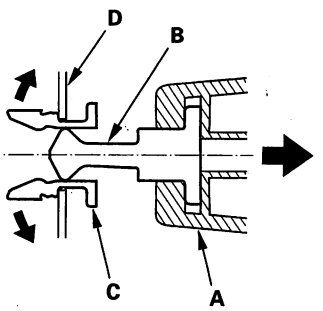


4. Remove the A-pillar trim (A) by hand to detach the remaining clips, then pull the trim up from the dashboard (B).

**Fastener Locations**

▷: **Clip, 2 (Gray)**

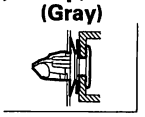

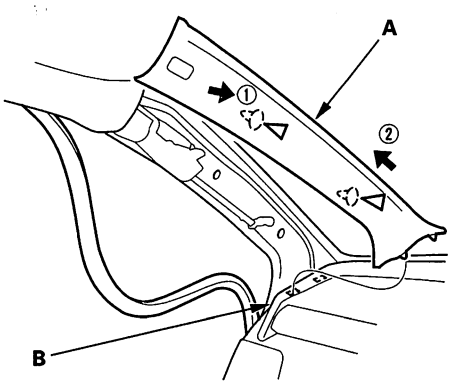


5. Remove the grommet from the body.

   NOTE: The upper clip must be replaced with a new one because the grommet is damaged during removal.

6. If the side curtain airbag has been deployed, replace the A-pillar trim with a new one.

7. If the side curtain airbag has not been deployed, check the A-pillar trim (A):

   - To prevent the side curtain airbags from deploying improperly and possibly causing injury, inspect the A-pillar trim and replace it if it has any of these types of damage:
     – Any cracks, deformations, or stress-whitenings
     – Any cracks or stress-whitened in the clip and pin seating surfaces (B)
     – Damaged top of the upper clip pin (C)
   - Replace the upper clip with a new one because it was damaged during removal.
   - Check for damaged or stress-whitened clips (D), and replace them with new ones.

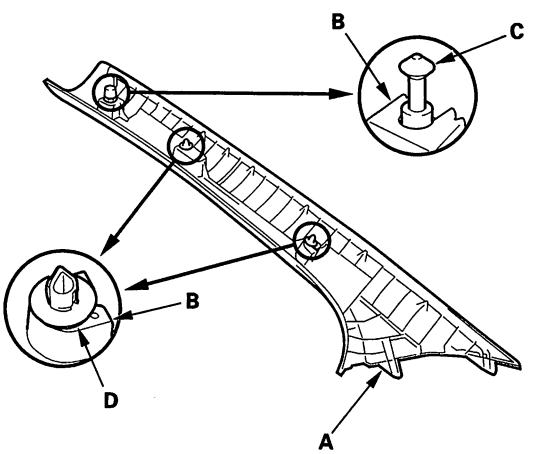




BACK

Protected by AR

8. Before installing the A-pillar trim (A), carefully remove the grommet (B) from the pin (C) on the new upper clip.

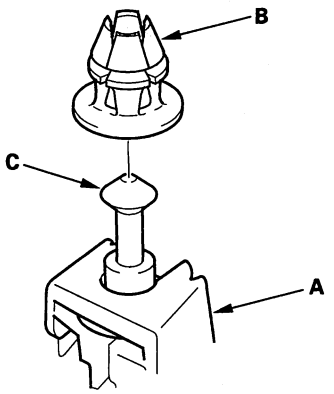


9. Check the overlap between the headliner and A-pillar trim, and if necessary, adjust it (see page 24-144).

10. Carefully reinstall the grommet (A) on the pin (B) and seat them on the A-pillar trim (C) as shown.

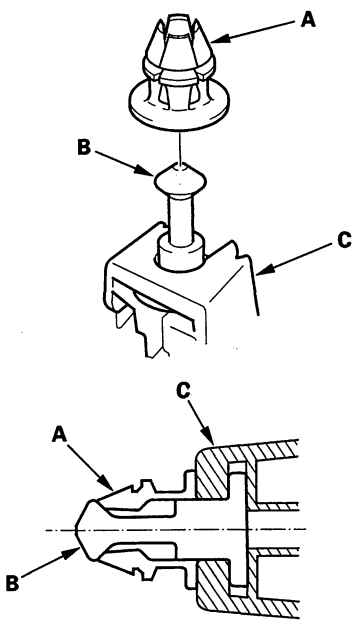


11. Reinstall the A-pillar trim (A).

-1 Insert the bottom of the trim into the dashboard (B).
-2 Place the trim over the A-pillar (C), and fit its upper clip (D) and the other clips (E) into holes (F) in the A-pillar, then lightly push the trim into place.

NOTE:
- Make sure the side curtain airbag isn't tucked down under the clips and ribs.
- Push lightly on the upper clip. If you push too hard, the clip will be damaged, and it will not hold the trim properly.

**Fastener Locations**

**E ▷ : Clip, 2 (Gray)**

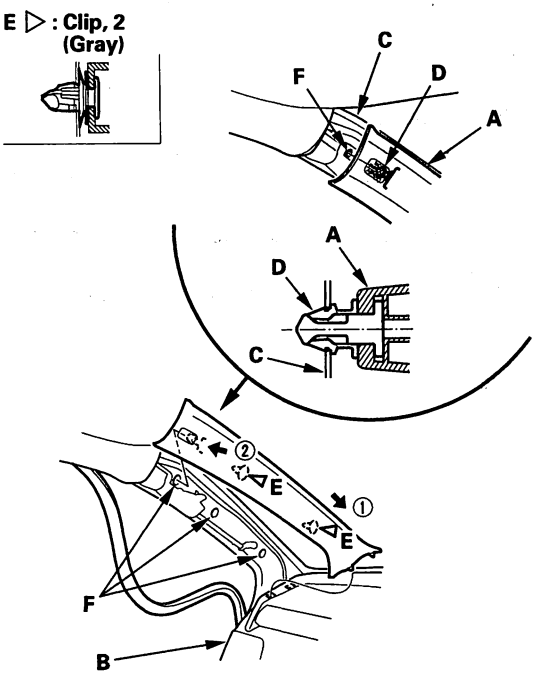


12. Reinstall the front door opening seal.

Protected by AR



## Trim Removal/Installation - Pillar Areas (cont'd)

**Special Tools Required**
KTC trim tool set SOJATP2014 *
* Available through the American Honda Tool and Equipment Program; call 888-424-6857

### B-Pillar Upper/Lower Trim

SRS components are located in this area. Review the SRS component locations (see page 24-12) and the precautions and procedures (see page 24-14) before doing repairs or service.

NOTE:
- Put on gloves to protect your hands.
- Use the appropriate tool from the KTC trim tool set to avoid damage when prying components.
- Take care not to bend or scratch the trim and panels.

1. Remove these items:
   - Front door sill trim (see page 20-66)
   - Rear door sill trim (see page 20-68)
   - Front door opening seal, as needed (see step 4 on page 20-67)
   - Rear door opening seal, as needed (see step 4 on page 20-68)
   - Remove the lower anchor bolt (see step 3 on page 20-118)
2. Slide the front seat forward fully.
3. Remove the B-pillar lower trim (A).
   - -1 Pull the upper portion of the trim back to release the upper hooks (B).
   - -2 Detach the lower clips by pulling the bottom of the trim back by hand.

**Fastener Locations**

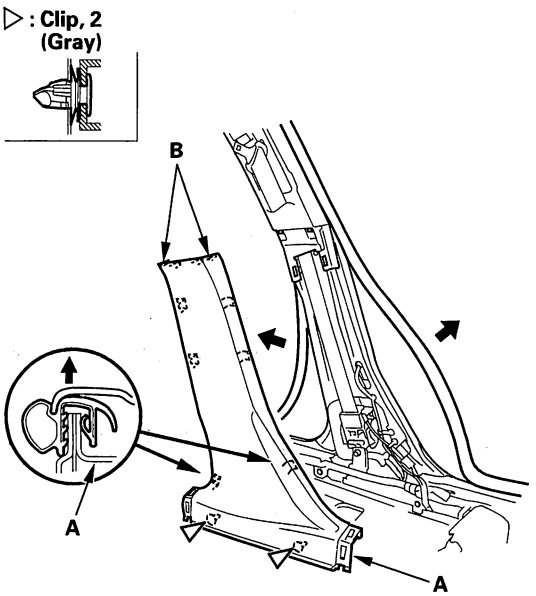


4. Pull the bottom of the B-pillar upper trim (A) back by hand to detach the lower hooks (B). Release the upper pin (C) by pulling the top of the B-pillar upper trim.

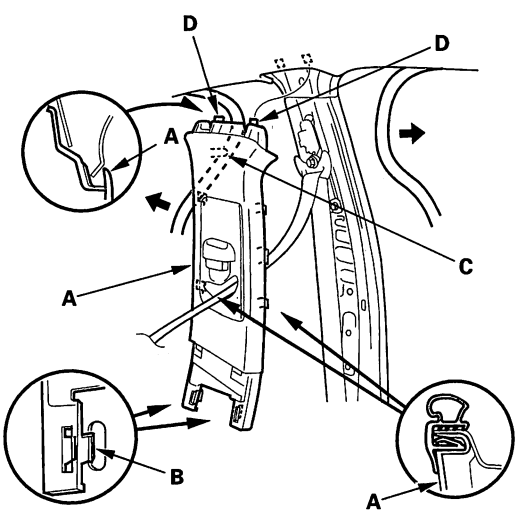


5. Pull the trim down to release the upper hooks (D).



BACK

Protected by AR

6. Pass the front seat belt (A) lower anchor out through a hole in the slider (B), then remove the B-pillar upper trim (C).

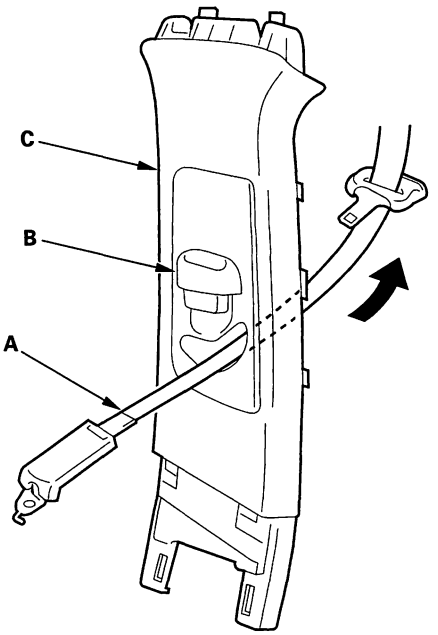


7. Remove the slider (A) from the B-pillar upper trim (B).

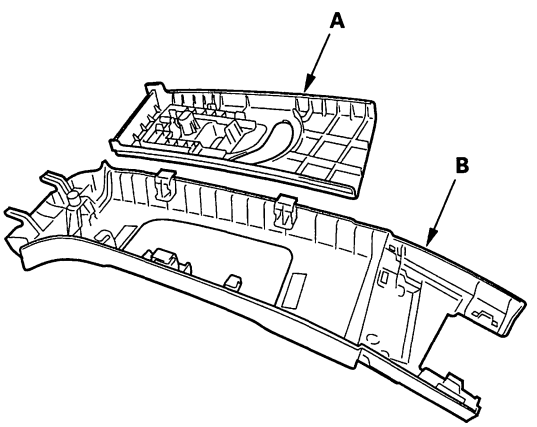


8. Install the trim in the reverse order of removal, and note these items:

- Replace any damaged clips (A) with new ones.
- If the side curtain airbag has deployed, replace the B-pillar upper and lower trim and all clips on the trim with new ones (see page 24-143).
- To prevent the side curtain airbags from deploying improperly and possibly causing injury, inspect the trim and replace it if it has any of these types of damage:
  - Any cracks or deformations in the B-pillar upper trim (B) and the upper hooks (C), and any stress-whitened clips in the upper part of the trim
  - Any cracks or deformations in the B-pillar lower trim (D), and any breakages in the part (E) fitted with the B-pillar upper trim
  - Any cracks or stress-whitened clips in the seating surface (F)
- Replace any damaged parts with new ones.
- Make sure the top of the trim overlaps with the headliner correctly (see page 24-144).
- Make sure the pin (G) on the front seat belt shoulder anchor adjuster (H) and the hole (I) on the back of the slider are engaged when installing the B-pillar upper trim.
- Make sure the trim hook is installed into the side curtain airbag B-pillar bracket securely.
- Push the clip and hooks into place securely.
- Before installing the anchor bolt, make sure there are no twists or kinks in the seat belt.

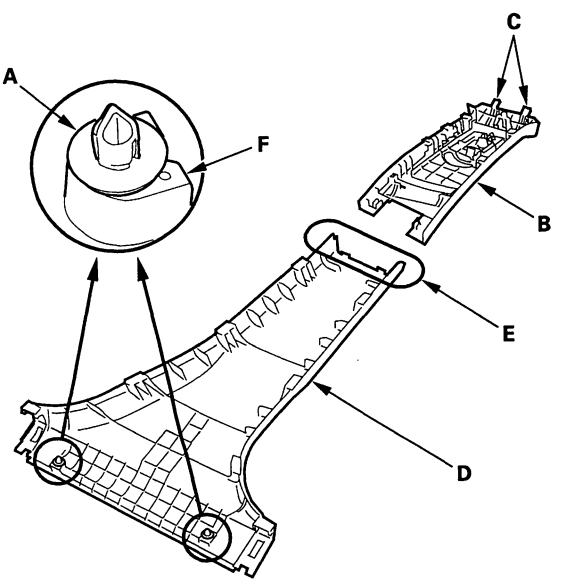


(cont'd)

Protected by AR



## Trim Removal/Installation - Pillar Areas (cont'd)

**Slider engagement with shoulder anchor adjuster**

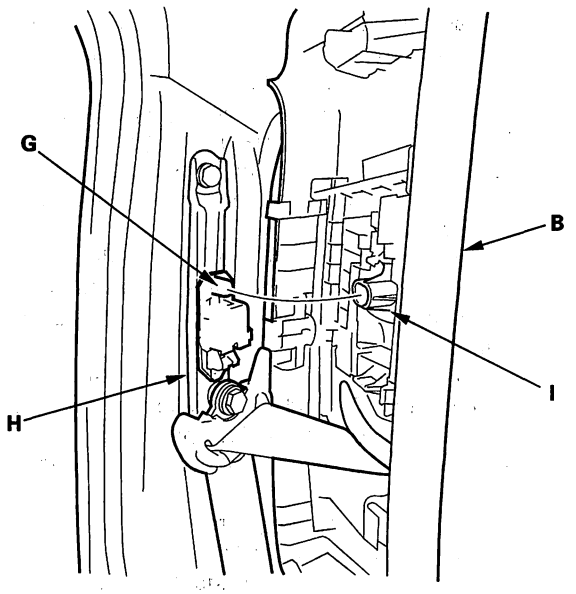




BACK

Protected by AR

**Special Tools Required**
KTC trim tool set SOJATP2014 *
* Available through the American Honda Tool and Equipment Program; call 888-424-6857

## Quarter pillar Trim

SRS components are located in this area. Review the SRS component locations (see page 24-12) and the precautions and procedures (see page 24-14) before doing repairs or service.

NOTE:
- Put on gloves to protect your hands.
- Use the appropriate tool from the KTC trim tool set to avoid damage when prying components.
- Take care not to bend or scratch the trim and panels.

1. Remove these items:

   - Cargo area side trim panel (see page 20-76)
   - Tailgate weatherstrip, as needed (see page 20-158)
   - Rear door opening seal, as needed (see step 4 on page 20-68)

2. Remove the quarter pillar trim (A).

   -1 Detach the clips (B, C) and pin (D) by pulling the trim back.
   -2 Lower the trim to release the upper hooks (E).

**Fastener Locations**

B ▷ : Clip, 1 (Gray)  C ▷ : Clip, 4 (Gray)  D ▷ : Pin, 1

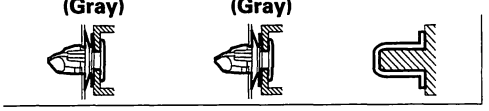

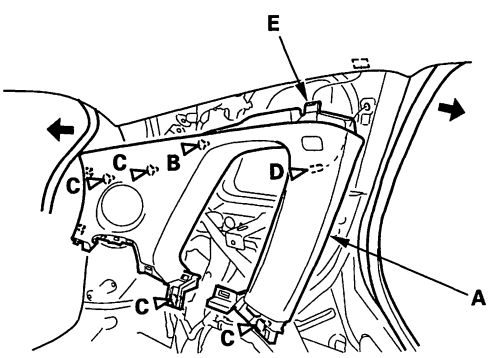


3. Install the trim in the reverse order of removal, and note these items:

   - Replace any stress-whitened or damaged clips (A) with new ones.
   - If the side curtain airbag has deployed, replace the quarter pillar trim and all clips on the trim with new ones (see page 24-143).
   - To prevent the side curtain airbags from deploying improperly and possibly causing injury, inspect the trim and replace it if it has any of these types of damage:
     – Any cracks or deformations in the quarter pillar trim (B) and the upper hook (C), and any stress-whitened areas in the upper part of the trim
     – Any cracks or stress-whitened areas in the clips seating surface (D)
   - Replace any damaged parts with new ones.
   - Make sure the top of the trim overlaps with the headliner correctly (see page 24-144).
   - Push the clip and hooks into place securely.

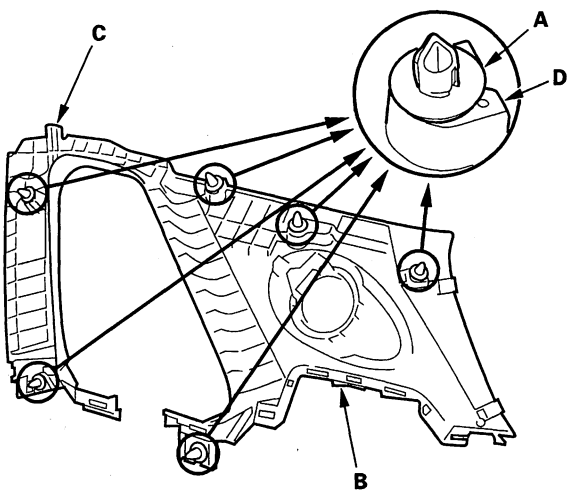

Protected by AR



## Trim Removal/Installation - Rear Side Area

**Special Tools Required**
KTC trim tool set SOJATP2014 *
* Available through the American Honda Tool and Equipment Program; call 888-424-6857

SRS components are located in this area. Review the SRS component locations (see page 24-12) and the precautions and procedures (see page 24-14) before doing repairs or service.

NOTE:
- Put on gloves to protect your hands.
- Use the appropriate tool from the KTC trim tool set to avoid damage when prying components.
- Take care not to bend or scratch the trim and panels.

1. Remove these items:
   - Tailgate weatherstrip, as needed (see page 20-158)
   - Rear door opening seal, as needed (see step 4 on page 20-68)
   - Rear door sill trim (see page 20-68)
   - Rear trim panel (see page 20-78)
   - Cargo area floor (see page 20-78)
   - Seat side bolster (see page 20-138)
   - Cargo area lid (see page 20-79)

2. Remove the hook (A) of the cover from the pin (B) of the tailgate each side trim, then pull out the cargo area cover (C) to release the lock (D) and remove the cover.

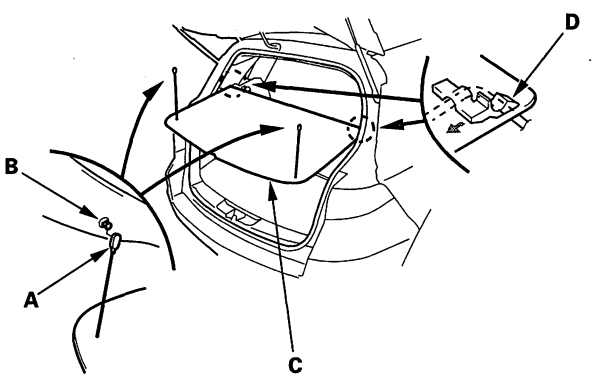


3. Open the lid (A) and remove the screw (B), then remove the cargo hook (C) (two places).

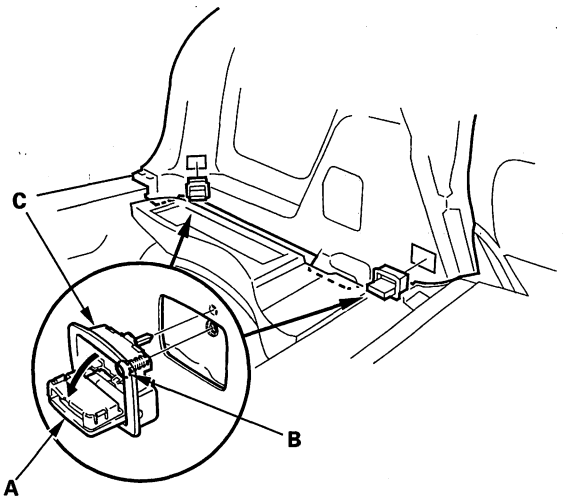




BACK

Protected by AR

4. Remove the cargo area side trim panel (A).

   -1 Using the appropriate trim tool, pry out the lid (B) from the cargo area side trim panel (C) then remove the bolts (D) of the rear side hanger (E).
   -2 Remove the clips (F), then remove the trim panel back by hand to detach the clips (G).
   -3 Pull out the upper edge of the panel back to release the upper hooks (H) from the quarter pillar trim (I).
   -4 Pull the rear seat belt out through the slit in the seat belt retractor cover then remove the cargo area side trim panel.
   -5 Driver's side: Disconnect the cargo area light connector (J).

**Driver's side**

**Fastener Locations**

**D ▶ : Bolt, 2  F ▷ : Clip, 3  G ▷ : Clip, 5 (Gray)**

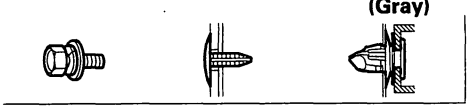

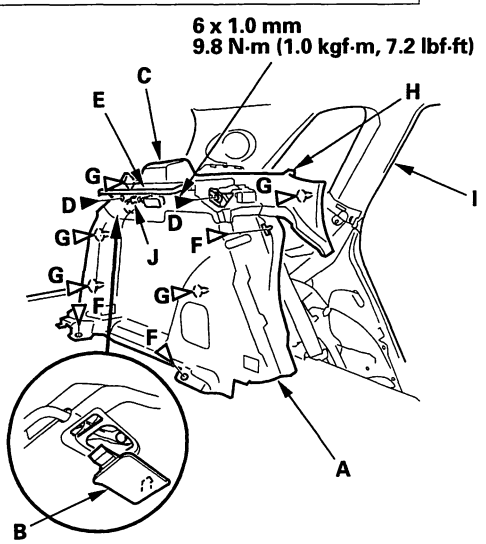


**Passenger's side**

**Fastener Locations**

**D ▶ : Bolt, 2  F ▷ : Clip, 3  G ▷ : Clip, 5 (Gray)**

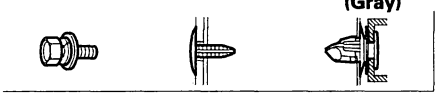

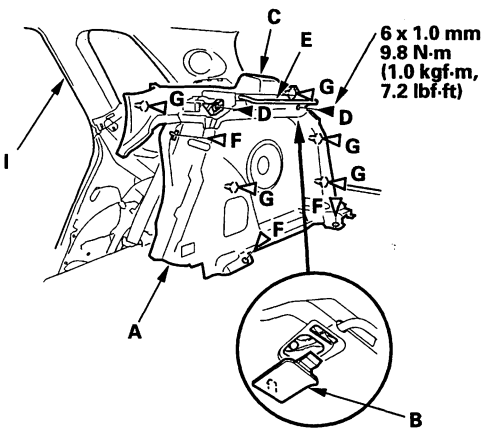


5. Remove the screws and release the hooks (A) from the panel, and remove the seat belt retractor cover (B) and side trim hanger (C).

**Fastener Locations**

**▶ : Screw, 2**

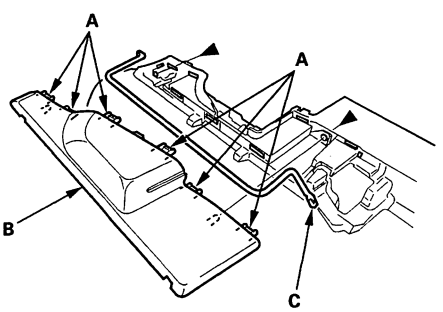


6. Install the trim in the reverse order of removal, and note these items:

   - Check if the clips are damaged or stress-whitened, and if necessary, replace them with new ones.
   - Make sure the cargo area light connector is plugged in properly.
   - When installing the panel, make sure there are no pinches in the seat belt.
   - Push the clips and hooks into place securely.

BACK

Protected by AR



## Trim Removal/Installation - Cargo Area

**Special Tools Required**
KTC trim tool set SOJATP2014 *
* Available through the American Honda Tool and Equipment Program; call 888-424-6857

NOTE:
- Put on gloves to protect your hands.
- Use the appropriate tool from the KTC trim tool set to avoid damage when prying components.
- Take care not to bend or scratch the trim and panels.

### Rear Trim Panel

1. Remove the cargo area floor.

2. Remove the tailgate weatherstrip, as needed (see page 20-158).

3. Detach the clips (A, B, C) by pulling the rear trim panel (D).

**Fastener Locations**

A ▷ : Clip, 2 B ▷ : Clip, 2 (Green) C ▷ : Clip, 2 (Gray)

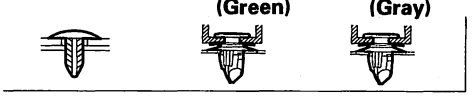

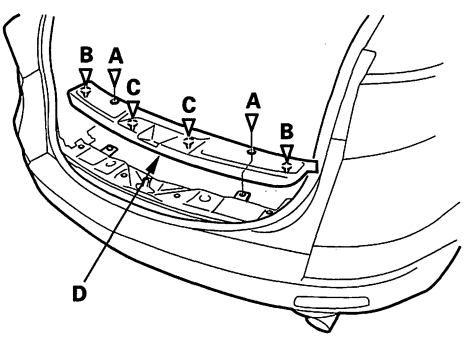


4. Install the trim in the reverse order of removal, and note these items:

   - Check if the clips are damaged or stress-whitened, and if necessary, replace them with new ones.
   - Push the clips into place securely.

### Cargo Area Floor

1. Remove the cargo area floor (A).

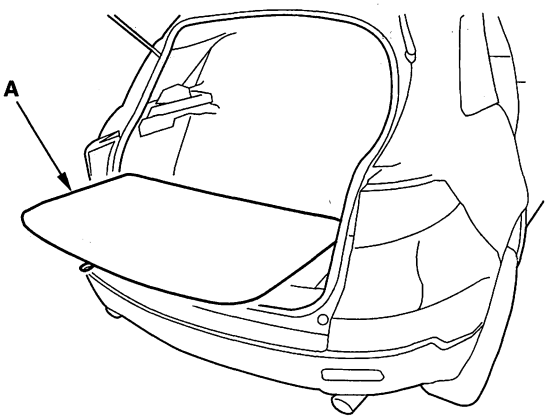


2. Install the floor in the reverse order of removal.



BACK

Protected by AR

## Cargo Area Lid

1. Fold both rear seats down.
2. Remove the cargo area cover and floor.
3. Lift up the cargo area lid (A) to detach the clips (B, C).

**Fastener Locations**

**B ▷ : Clip, 1** **C ▷ : Clip, 3**

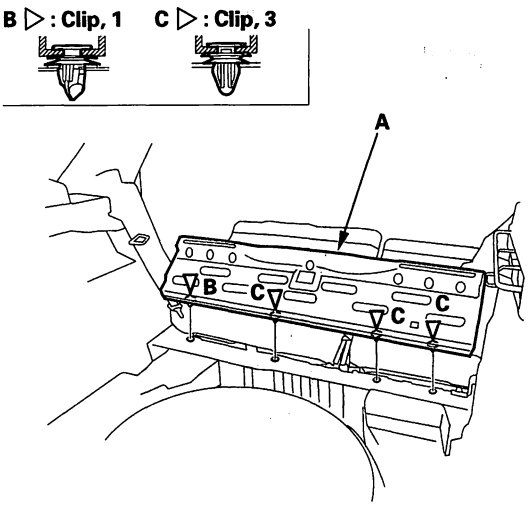


4. Install the lid in the reverse order of removal, and note these items:
   - Check if the clips are damaged or stress-whitened, and if necessary, replace them with new ones.
   - Push the clips into place securely.

## Side Floor Spacer

1. Remove the cargo area side trim panel, as needed (see page 20-76).
2. Remove the side floor spacers (A).

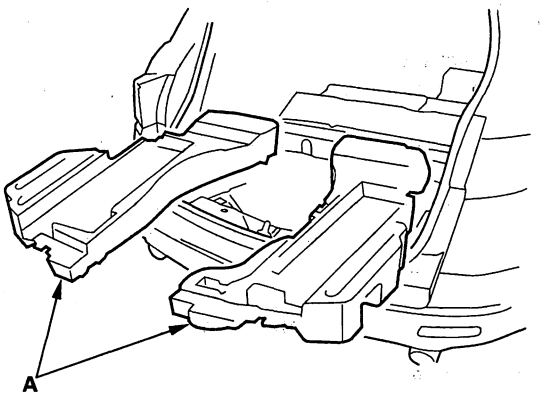


3. Install the spacers in the reverse order of removal.

Protected by AR



## Trim Removal/Installation - Tailgate Area

**Special Tools Required**
KTC trim tool set SOJATP2014 *
* Available through the American Honda Tool and Equipment Program; call 888-424-6857

NOTE:
- Put on gloves to protect your hands.
- Use the appropriate tool from the KTC trim tool set to avoid damage when prying components.
- Take care not to bend or scratch the trim and panels.

1. Remove the tailgate upper trim panel (A).

   -1 Disengage the hooks (B) and tabs (C) from the left tailgate side trim (D) and right tailgate side trim (E).
   -2 Pull the tailgate upper trim panel by hand to detach the clips, then remove it.

**Fastener Locations**

▷ : Clip, 4 (Gray)

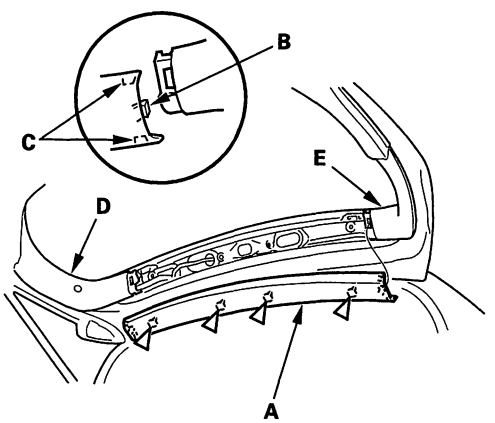


2. Remove the tailgate side trim (A).

   -1 Disengage the hook (B) and tab (C) from the tailgate lower trim panel (D).
   -2 Pull the tailgate side trim back by hand to detach the clips (E, F) and hooks, then remove it.

**Fastener Locations**

E ▷ : Clip, 1 (Gray)
F ▷ : Clip, 1 (Orange)

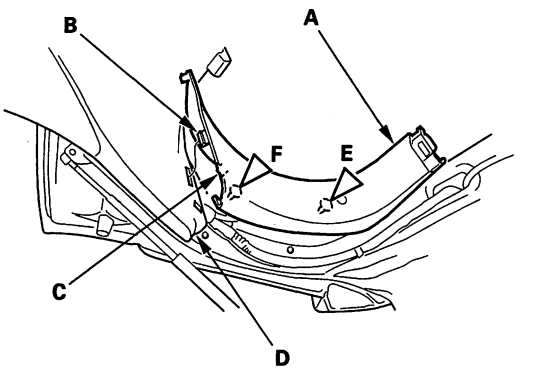




BACK

Protected by AR

3. Remove the tailgate lower grip (A).

   -1 Using a trim tool to release the hooks (B) and tabs (C), pull and remove the tailgate lower grip caps (D) from the lower grip .
   -2 Remove the screws and remove the tailgate lower grip from the tailgate lower trim panel (E).

**Fastener Locations**

**▶ : Screw, 2**

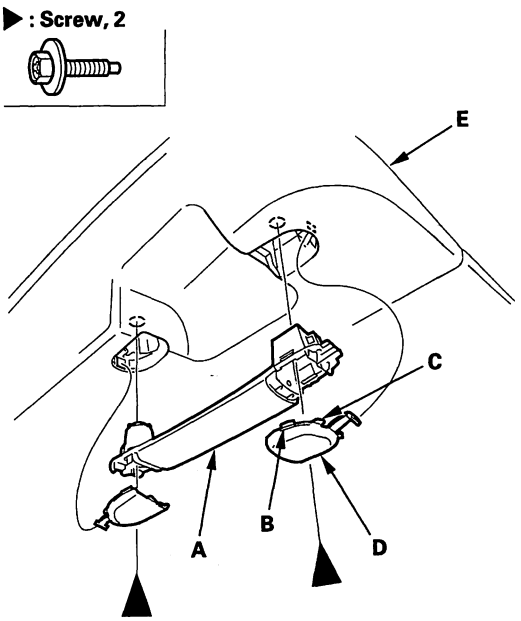


4. Pull the tailgate lower trim panel (A) back by hand, and detach the clips (B, C), then remove it.

**Fastener Locations**

**B ▷ : Clip, 14 (Gray)**  **C ▷ : Clip, 2 (Black)**

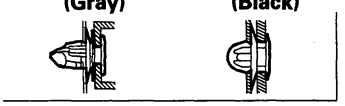

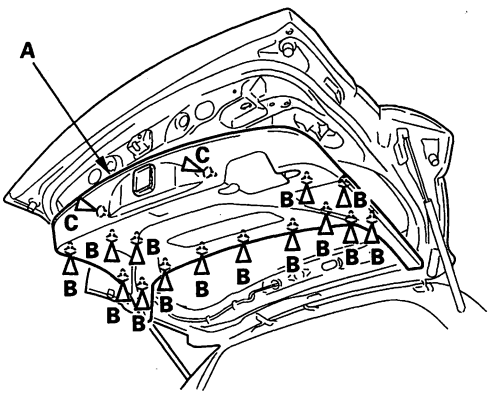


5. Install the trim in the reverse order of removal, and note these items:

   - Check if the clips are damaged or stress-whitened, and if necessary, replace them with new ones.
   - Push the clips and hooks into place securely.

Protected by AR



## Sunvisor Removal/Installation

**Special Tools Required**
KTC trim tool set SOJATP2014 *
* Available through the American Honda Tool and Equipment Program; call 888-424-6857

NOTE:
- Put on gloves to protect your hands.
- Use the appropriate tool from the KTC trim tool set to avoid damage when prying components.
- Take care not to bend or scratch the trim and panels.

1. From both sides, using a trim tool, release the tabs (A) from the bracket (B).

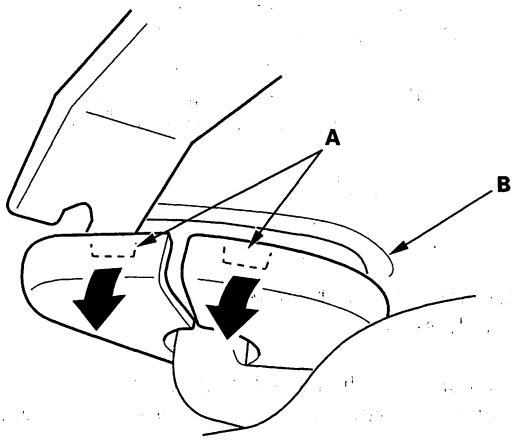


2. Remove the sunvisor cap (A) from the bracket (B). Turn the cap, and remove it.

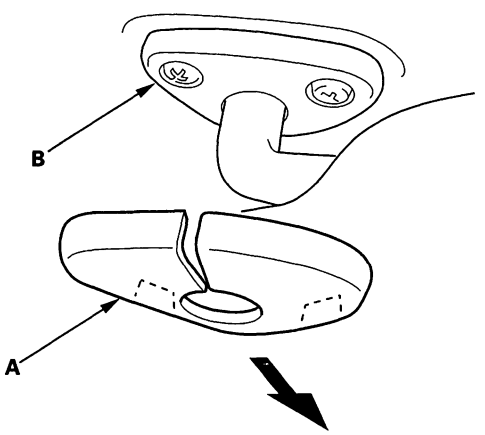


3. Remove the sunvisor (A).
   - 1 Using a T25 TORX bit, remove the self-tapping ET screws.
   - 2 Remove the sunvisor from the body and holder (B).
   - 3 Disconnect the vanity mirror light connector (C).

**Fastener Locations**

▶ : Screw, 2

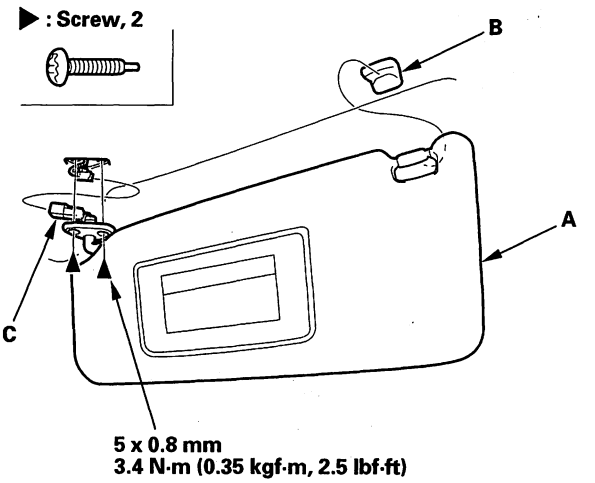


4. Using a flat-tip screwdriver, push the hook (A), and turn the holder (B) 90 °, then pull it out.

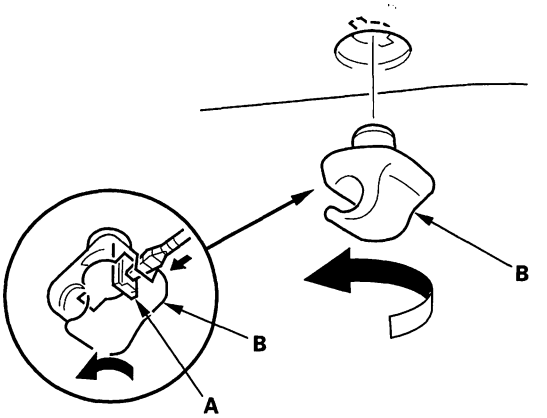




BACK

Protected by AR

5. Install the sunvisor in the reverse order of removal, and note these items:

   - If the side curtain airbag has deployed, replace the sunvisor with a new one (see page 24-143).
   - To prevent the side curtain airbags from deploying improperly and possibly causing injury, inspect removed pieces and replace them if they have any of these types of damage:
     - Any cracks in the sunvisor stay base (A)
     - Any bends or cracks in the sunvisor stay shaft (B)
     - Any cracks in the sunvisor base (C)
     - Any cracks or breakages in the vanity mirror base (D)
   - If the threads on a visor screws are worn out, use an oversized self-tapping ET screw, P/N 90137-S30-003, made specifically for this application.

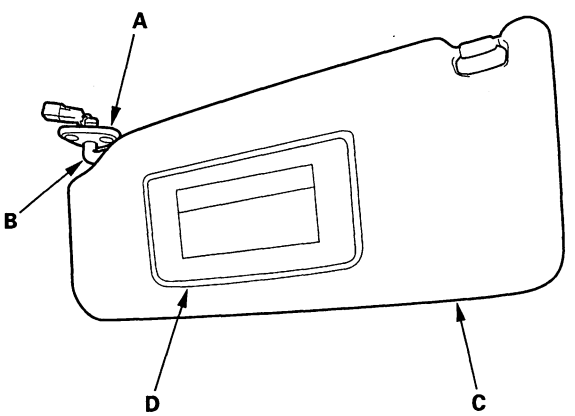


## Grab Handle Removal/Installation

**Special Tools Required**
KTC trim tool set SOJATP2014 *
* Available through the American Honda Tool and Equipment Program; call 888-424-6857

NOTE: Use the appropriate tool from the KTC trim tool set to avoid damage when prying components.

1. Lower the grab handle (A), then pull out the stops (B).

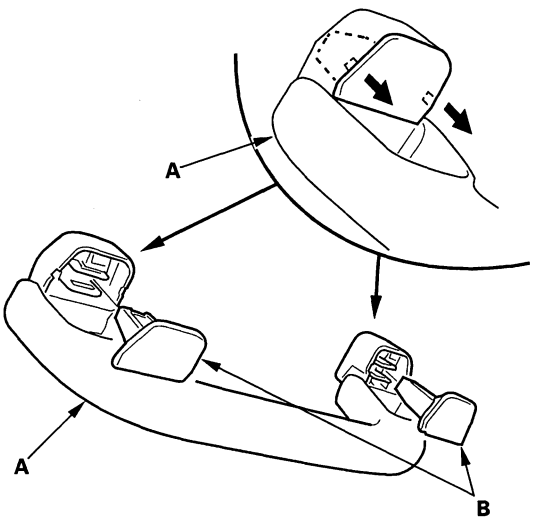


(cont'd)

Protected by AR



## Grab Handle Removal/Installation (cont'd)

2. While pinching the clips (A), release the hooks (B), then remove the grab handle (C).

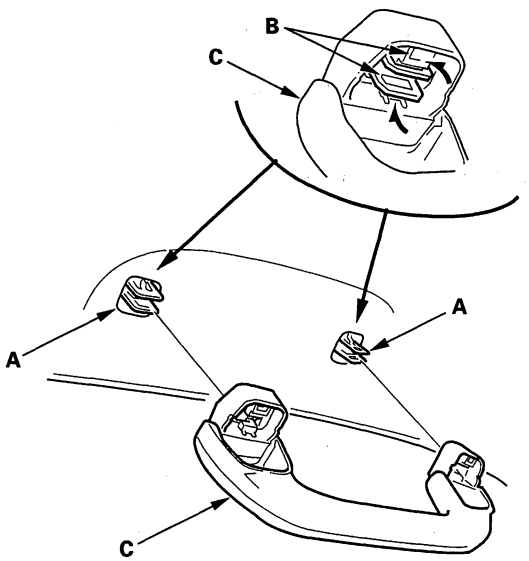


3. Using a pair of pliers, remove all of the clips (A) by pinching its hooks.

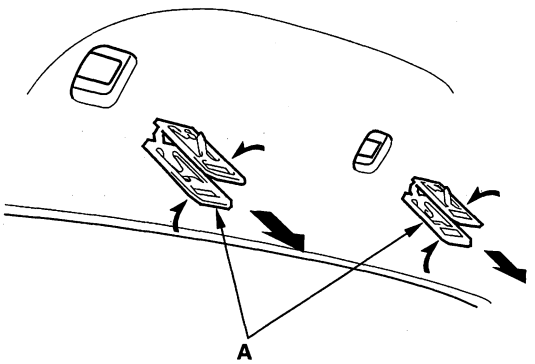


4. If the side curtain airbag has deployed, replace the grab handle with a new one (see page 24-143).

5. If the side curtain airbag has not deployed, to prevent the side curtain airbags from deploying improperly and possibly causing injury, inspect removed pieces and replace them if they have any of these types of damage:

   - Any cracks or breakages in the grab handle (A).
   - Any cracked or stress-whitened in the stops (B).

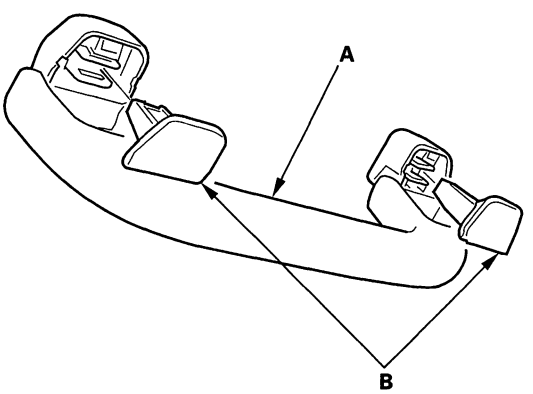




BACK

Protected by AR

6. Install the clips (A) to the grab handle (B), then install the stops (C) fully into the clips.

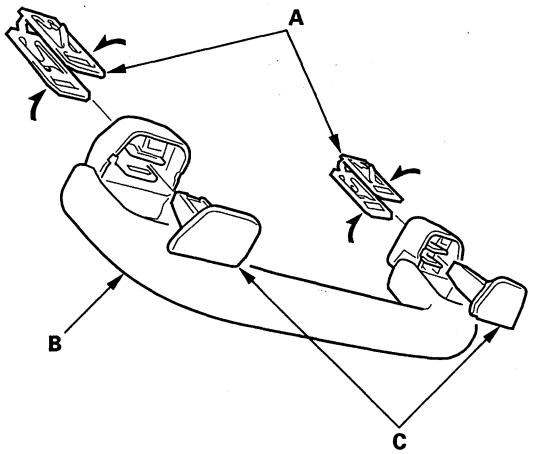


7. Position the grab handle (A) on the bracket (B), and push on the grab handle until the clips (C) snap into place securely.

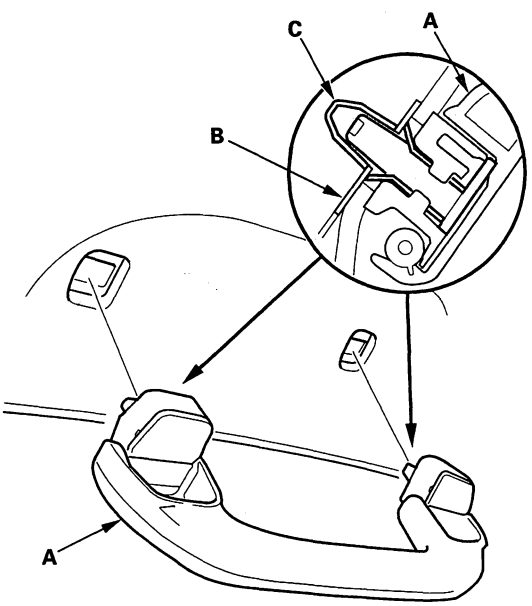


## Headliner Removal/Installation

**Special Tools Required**
KTC trim tool set SOJATP2014 *
* Available through the American Honda Tool and Equipment Program; call 888-424-6857

SRS components are located in this area. Review the SRS component locations (see page 24-12) and the precautions and procedures (see page 24-14) before doing repairs or service.

NOTE:
- Put on gloves to protect your hands.
- Take care not to bend or scratch the trim and panels.
- Use the appropriate tool from the KTC trim tool set to avoid damage when prying components.

1. Make sure you have the anti-theft codes for the audio and the navigation system (if equipped), then write down the audio presets.

2. Disconnect the negative cable from the battery, and wait at least 3 minutes before beginning work.

3. Remove these items:

   - A-pillar trim, both sides (see page 20-69)
   - Ceiling light (see page 22-197)
   - B-pillar lower trim (see page 20-72)
   - B-pillar upper trim, both sides (see page 20-72)
   - Quarter pillar trim, both sides (see page 20-75)
   - Sunvisors, both sides (see page 20-82)
   - Grab handles, four places (see page 20-83)

(cont'd)

Protected by AR



## Headliner Removal/Installation (cont'd)

4. Remove the roof console (A).

   -1 Detach the clip (B) and release the hooks (C) by pulling the map light assembly (D).
   -2 Disconnect the front individual map light connector (E) and the moonroof switch connector (F), then remove the map light assembly.
   -3 Remove the bolts (G), and remove the roof console.

**Fastener Locations**

**B ▷ : Clip, 1** **G ▶ : Bolt, 4**

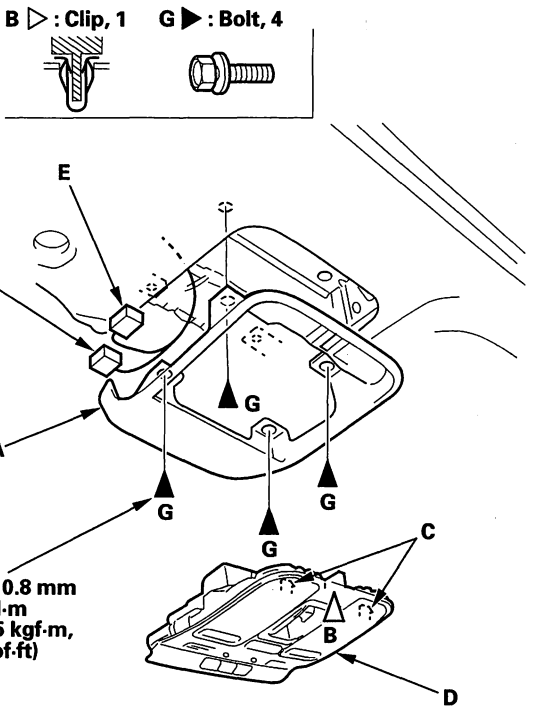


5. Lower the headliner (A).

   -1 Remove the front door inner seals (B), and rear door inner seals (C) from each roof portion.
   -2 Release the rear clips from the headliner.
   -3 Lower the headliner.

**Fastener Locations**

**▷ : Clip, 3**

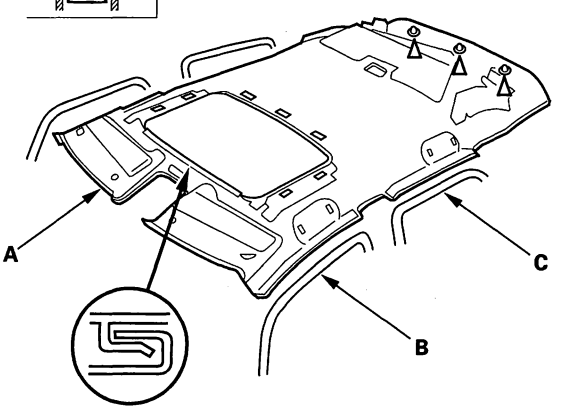


6. With the help of an assistant, pull the headliner (A) out through the tailgate opening. Do not bend the liner. Bending the liner will crease and damage it.

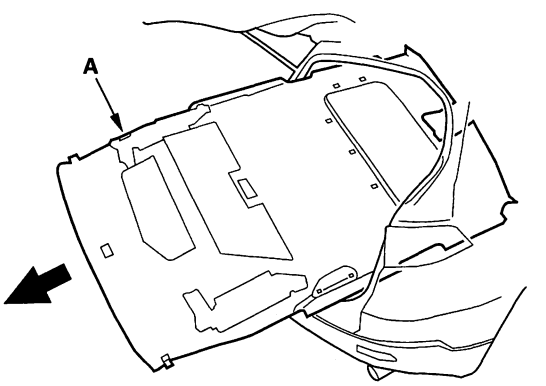




BACK

Protected by AR

7. If necessary, remove the side curtain airbag mounting bolt (A) and grab handle bracket mounting bolts (B), clips (C), then remove the grab handle bracket (D) from each side by releasing the hooks (E).

**Front**

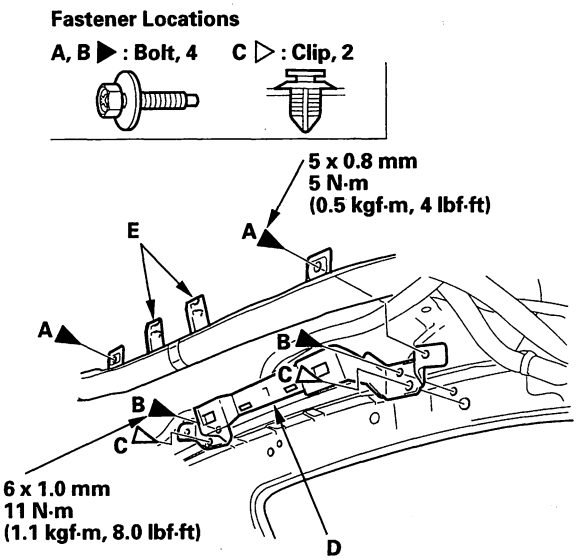


**Rear**

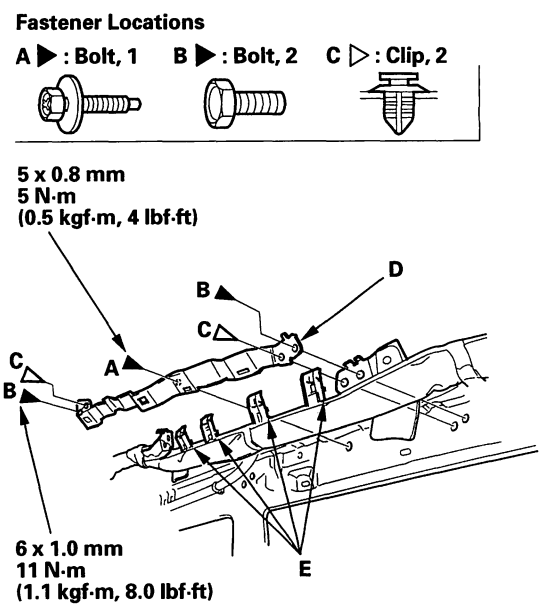


8. Install the headliner in the reverse order of removal, and note these items:

- If the side curtain airbag has deployed, replace the headliner and removed trim pieces with new ones (see page 24-143).
- To prevent the side curtain airbags from deploying improperly and possibly causing injury, inspect removed pieces and replace them if they have any of these types of damage:
  - Any crease or tears in the headliner (A)
  - Any cracks or breakages in the grab handle (B)
  - Any damages around the grab handle holes (C) or sunvisor holes in the headliner
  - Any cracks in the sunvisor stay base (D)
  - Any bends or cracks in the sunvisor stay shaft (E)
  - Any cracks in the sunvisor base (F)
  - Any cracks or breakages in the vanity mirror base (G)
  - Any Velcro fasteners (H) and clip bases (I) which have come off the headliner
- When installing the grab handle, push on the handle against the bracket (J) until the clips (K) snap into place securely.
- Check for damaged or stress-whitened clips, and if necessary, replace them with new ones.
- Check that both sides of the headliner are securely attached to the trim.
- Make sure the headliner overlaps the trim pieces correctly (see page 24-143).
- When reinstalling the headliner through the tailgate opening, be careful not to fold or bend it. Also, be careful not to scratch the body.
- Reconnect the negative cable to the battery.
- Set the clock.
- Enter the anti-theft code for the audio and the navigation system (if equipped), then enter the audio presets.
- Check for any DTCs that may have been set during repairs, and clear them.

(cont'd)

Protected by AR



## Headliner Removal/Installation (cont'd)

**Headliner**

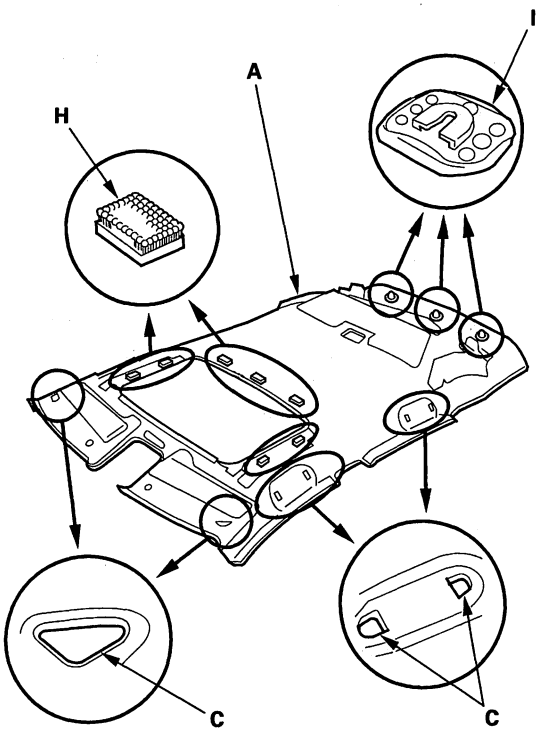


**Grab handle**

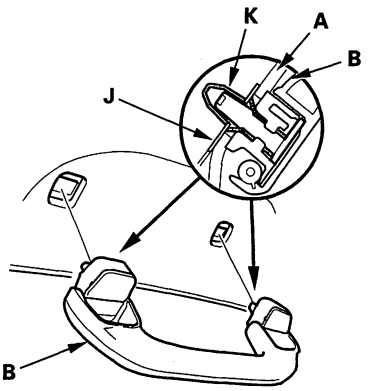


**Sunvisor**

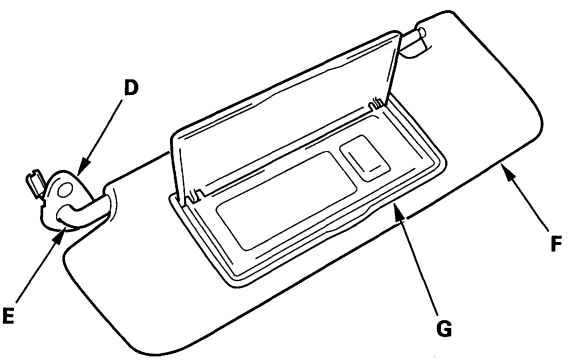




BACK

Protected by AR

# Carpet Replacement

**Special Tools Required**
KTC trim tool set SOJATP2014 *
* Available through the American Honda Tool and Equipment Program; call 888-424-6857

SRS components are located in this area. Review the SRS component locations (see page 24-12) and the precautions and procedures (see page 24-14) before doing repairs or service.

NOTE:
- Put on gloves to protect your hands.
- Use the appropriate tool from the KTC trim tool set to avoid damage when prying components.
- Take care not to damage, wrinkle or twist the carpet.
- Be careful not to damage the dashboard or other interior trim pieces.

1. Remove these items:
   - Front seats, both sides (see page 20-118)
   - Rear seat cushion (see page 20-137)
   - Front door sill trim, both sides (see page 20-66)
   - Rear door sill trim, both sides (see page 20-68)
   - Kick panels, both sides (see step 3 on page 20-67)
   - B-pillar lower trim (see page 20-72)
   - Driver's dashboard undercover (see page 20-102)
   - Passenger's dashboard undercover (see page 20-103)
   - Center console (see page 20-92)
   - Steering joint cover (see step 6 on page 17-25)
   - Stereo amplifier (see page 23-107)
   - Navigation unit (if equipped) (see page 23-190)

2. Detach the clips, then remove the footrest (A).

**Fastener Locations**
▷ : **Clip, 2**

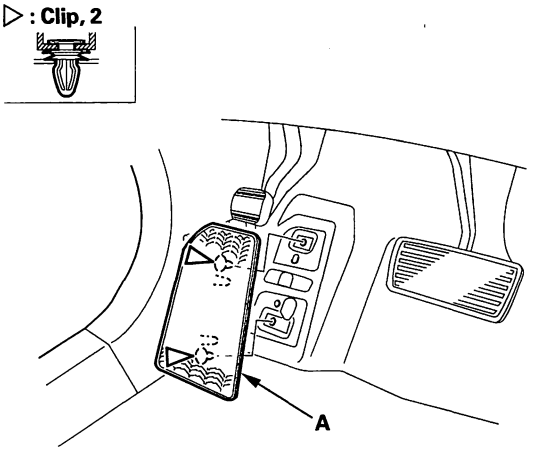


3. Detach the clip, then remove the rear heater joint (A).

**Fastener Location**
▷ : **Clip, 1**

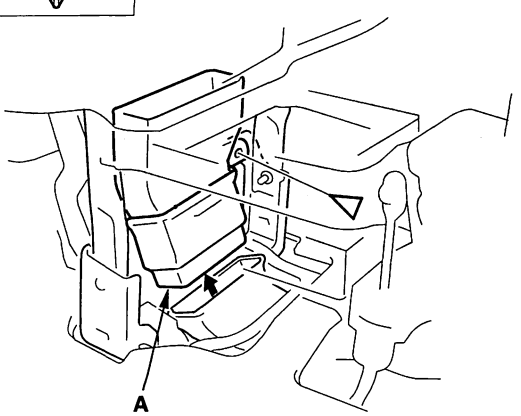


(cont'd)

Protected by AR



## Carpet Replacement (cont'd)

4. Disconnect the connectors in the dashboard lower center sections (see step 6 on page 20-112).

5. Remove the bolts (A, B), and remove the dashboard center brackets (C).

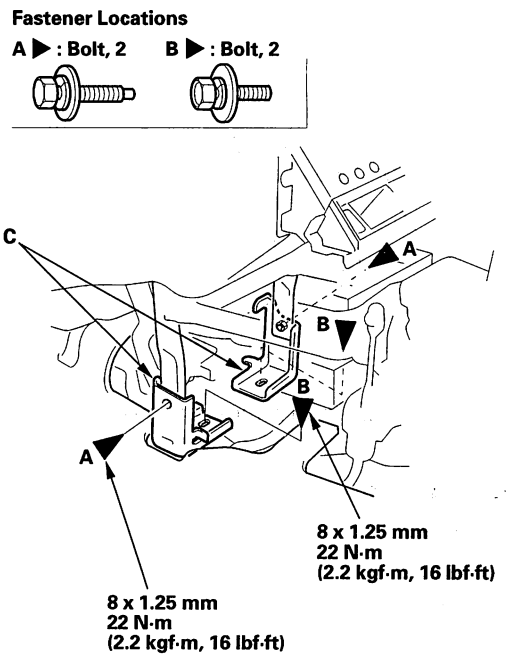


6. Remove the bolts of the A/T lever bracket (A), then separate the A/T lever bracket from the center frame (B) by moving to driver's side. Do not disconnect of the A/T shift cable.

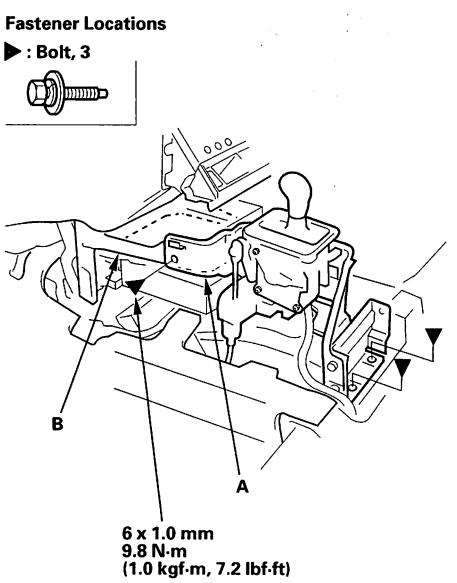


7. Detach the clips and release the fastener (A), then pull back the front carpet (B) from under the dashboard.

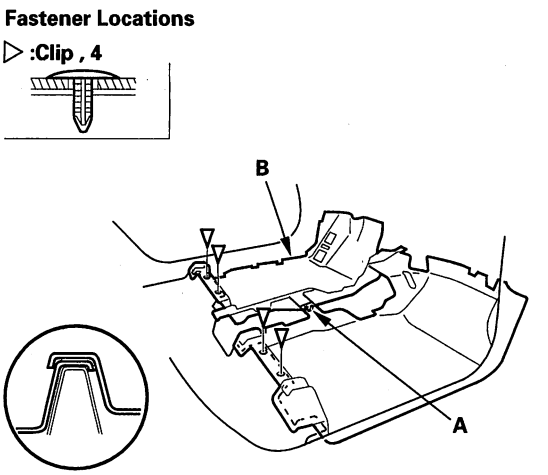


8. From back of the front carpet: Release the hooks (A) of the base (B) with a flat-tip screwdriver, and push up the projections of the holder from the base to remove the floor mat holder (C).

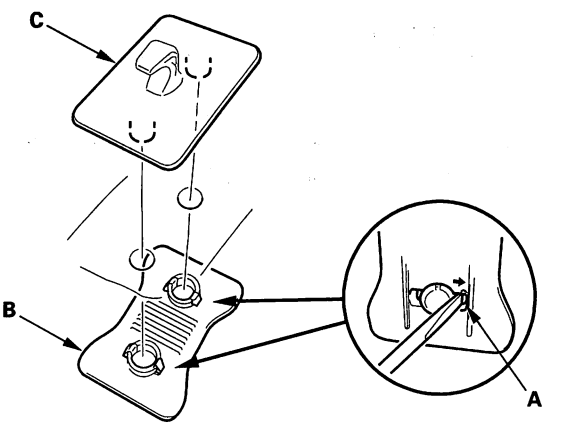




BACK

Protected by AR

9. Detach the clips, then pull up the rear carpet from under the seat side bolster both sides. Pull back the rear carpet (A), and remove it.

**Fastener Locations**

▷ :Clip , 2

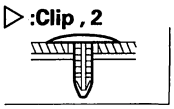

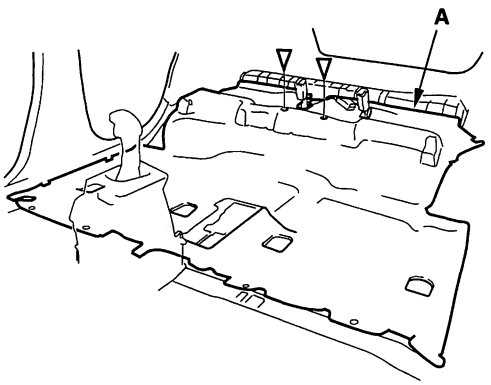


10. Install the front carpet and rear carpet in the reverse order of removal, and note these items:

- Take care not to damage, wrinkle or twist the front and rear carpets.
- Make sure the seat harnesses are routed correctly.
- Slip the rear carpet under both seat side bolster.
- Check if the clips are damaged or stress-whitened, and if necessary, replace them with new ones.
- Push the fasteners and clips into place securely.

Protected by AR



## Center Console Removal/Installation

**Special Tools Required**
KTC trim tool set SOJATP2014 *
* Available through the American Honda Tool and Equipment Program; call 888-424-6857

SRS components are located in this area. Review the SRS component locations (see page 24-12) and the precautions and procedures (see page 24-14) before doing repairs or service.

NOTE:
- Put on gloves to protect your hands.
- Use the appropriate tool from the KTC trim tool set to avoid damage when prying components.
- Take care not to scratch the center console, dashboard, and related parts.

1. Detach the hooks (A) by pulling the AT gear position indicator cover (B) up.

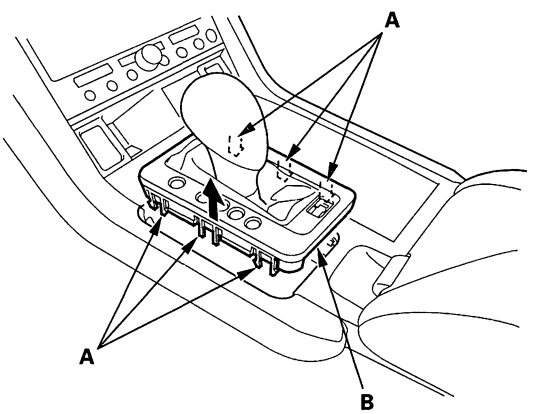


2. Remove the driver's console trim (A) and passenger's console trim (B).

   1 Detach the clips (C) by pulling up on the rear portion of the trim up.
   2 Detach the clips (D) by pulling it up from the dashboard, then remove it.

**Fastener Locations**
**C ▷ : Clip, 2  D ▷ : Clip, 5**

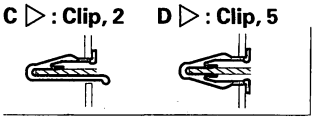

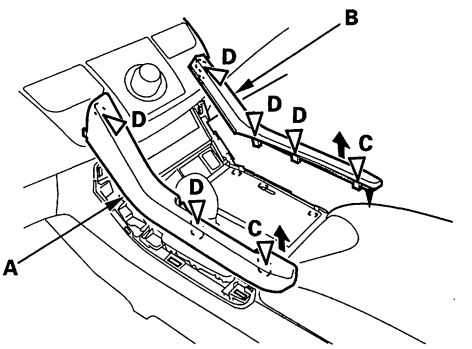


3. Open the armrest (A), and detach the clips, then remove the center console panel (B) up.

**Fastener Locations**
**▷ : Clip, 6**

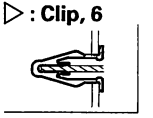

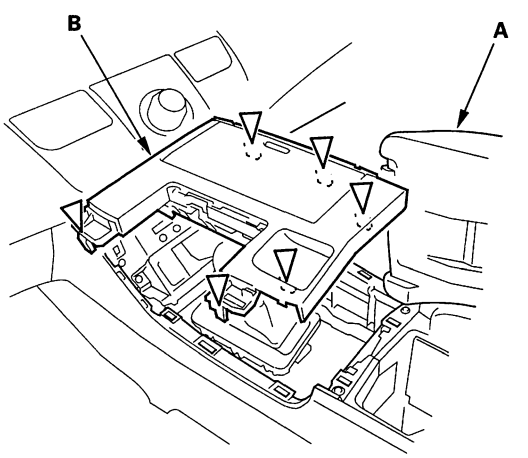




BACK

Protected by AR

4. Remove the screw (A) and clip (B), then pull out the driver's console cover (C) to detach the clips (D). Release the fastener (E) and hooks (F), then remove the cover.

**Fastener Locations**

**A ▶ : Screw, 1 B ▷ : Clip, 1 D ▷ : Clip, 3**

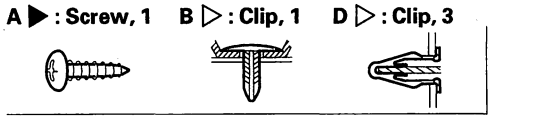

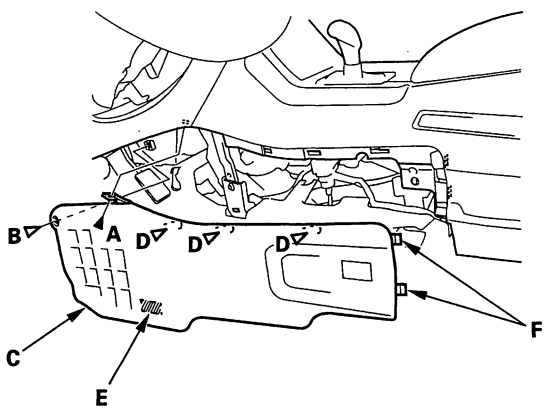


5. Detach the clips and hooks (A) by pulling the passenger's console cover (B) out, and pull it backward to release the pin (C) from the passenger's dashboard undercover, then remove it.

**Fastener Locations**

**▷ : Clip, 3**

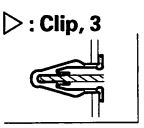

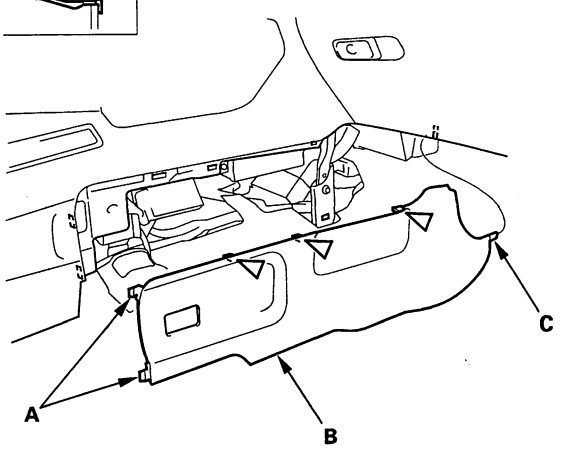


6. Remove the center console (A):

   1. Disconnect the accessory power socket connector and console light connector.
   2. Remove the bolts (B) of the console.
   3. Lift the rear of the console, then detach the clips (C) by pulling the console backward to remove.

**Fastener Locations**

**B ▶ : Bolt, 6 C ▷ : Clip, 4**

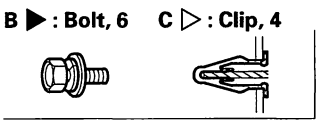

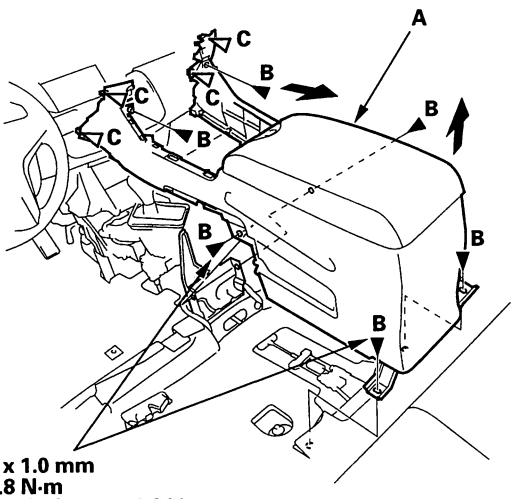


**6 x 1.0 mm**
**9.8 N·m**
**(1.0 kgf·m, 7.2 lbf·ft)**

7. Install the center console in the reverse order of removal, and note these items:

   - Check if the clips are damaged or stress-whitened, and if necessary, replace them with new ones.
   - Push the clips into place securely.

Protected by AR



## Center Console Armrest Removal/ Installation

NOTE: Take care not to scratch the armrest, center console and related parts.

1. Remove the armrest base (A).
   1. Open the armrest (B), then remove the screws (C).
   2. Pull out the armrest base to detach the clips (D).

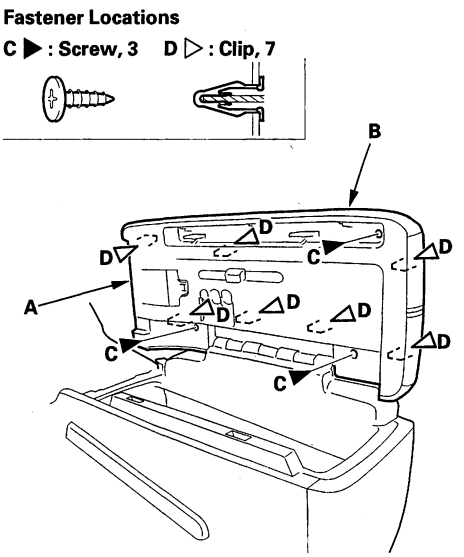


2. Remove the screws, then remove the armrest (A) from the armrest hinge (B).

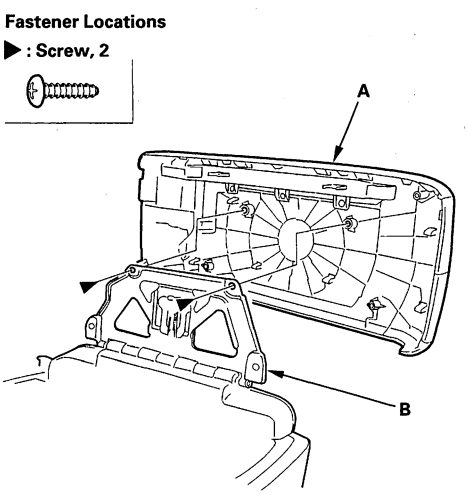


3. Install the center console armrest in the reverse order of removal. Check if the clips are damaged or stress-whitened, and if necessary, replace them with new ones.

## Armrest Lock Replacement

NOTE: Take care not to scratch the armrest and related parts.

1. Remove the center console armrest (see page 20-94)
2. Remove the screws, then remove the armrest lock (A) from the center console armrest (B).

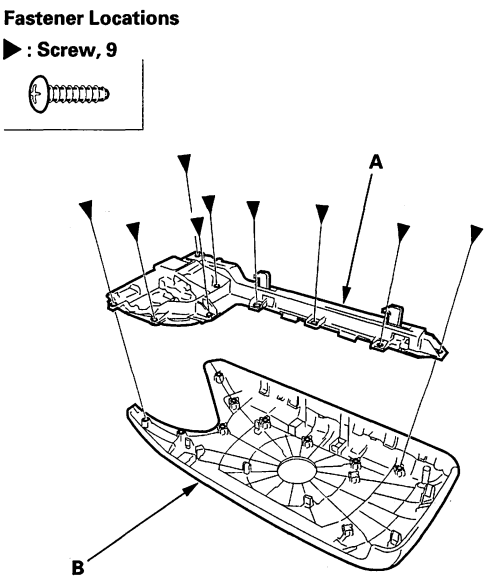


3. Pull out the armrest lock cover (A) to detach the hooks (B) from the armrest lock (C). If necessary, remove the key cylinder (D) by pulling out the spring (E).

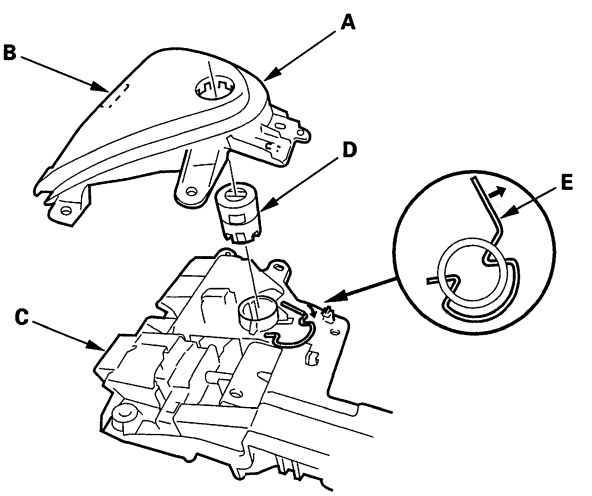


4. Install the armrest lock in the reverse order of removal.



BACK

Protected by AR

# Center Console Disassembly/Reassembly

**Special Tools Required**
KTC trim tool set SOJATP2014 *
* Available through the American Honda Tool and Equipment Program; call 888-424-6857

NOTE:
- Put on gloves to protect your hands.
- Use the appropriate tool from the KTC trim tool set to avoid damage when prying components.
- Take care not to scratch the center console and related parts.

1. Remove the center console (see page 20-92).

2. Remove the center console armrest (see page 20-94).

3. Pull out the center console rear trim (A) to detach the clips.

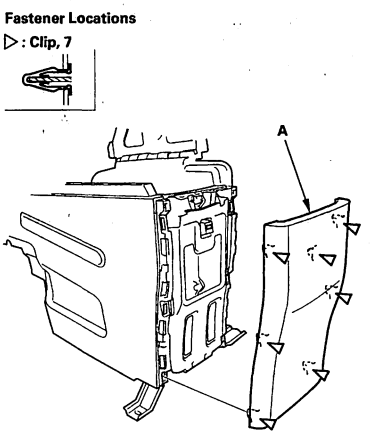


4. Remove the screw (A), then pull out the passenger's console (B) to detach the clips (C, D) and hooks (E), then remove it.

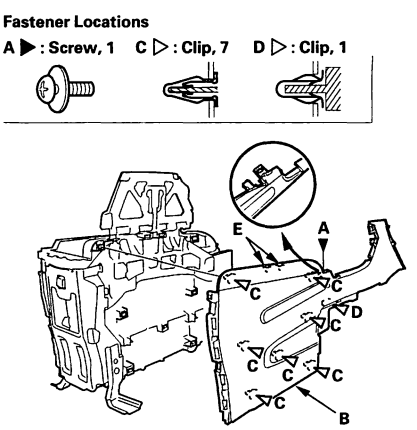


5. Remove the screws (A, B), then remove the armrest hinge (C) from the console box (D).

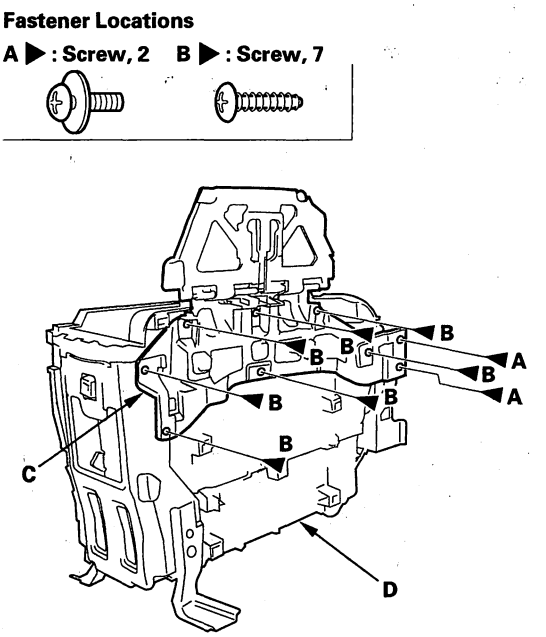


6. Detach the hooks (A) by pulling out the latch hole trim (B), then remove it.

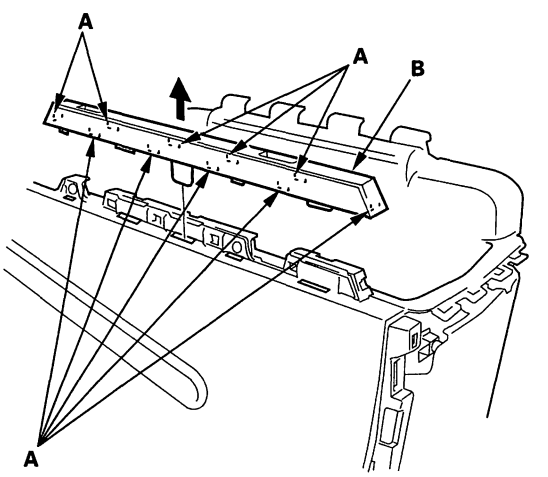


(cont'd)

Protected by AR



## Center Console Disassembly/Reassembly (cont'd)

7. Remove the screws (A, B), then pull out the driver's console (C) to detach the clips (D, E) and hooks (F), then remove it.

**Fastener Locations**

**A ▶ : Screw, 1** **B ▶ : Screw, 2** **D ▷ : Clip, 8**

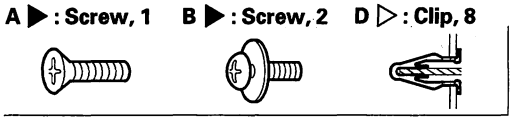

**E ▷ : Clip, 1**

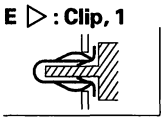

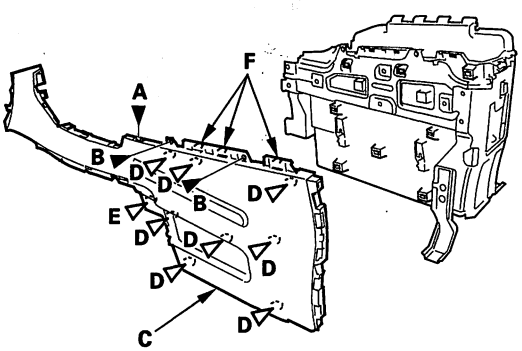


8. Remove the screws (A, B), then remove the center console rear bracket (C), center console driver's bracket (D) and center console bracket (E) away from the console box (F) as shown.

**Fastener Locations**

**A ▶ : Screw, 10** **B ▶ : Screw, 4**

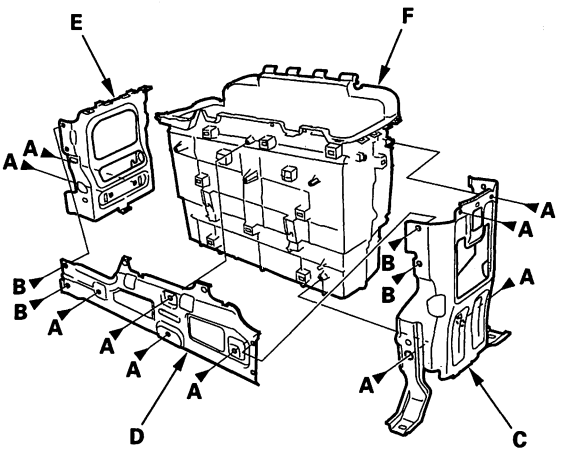


9. Assemble the console in the reverse order of removal.



BACK

Protected by AR

10. If necessary, remove the audio pocket (A) from the dashboard.

    1 Remove the screws.
    2 Pull out the audio pocket, and disconnect the front accessory power socket connector (B), driver's seat heater switch connector (C) and front passenger's seat heater switch connector (D).
    3 Remove the pocket by pushing it to the left.

**Fastener Locations**

▶ : Screw, 2

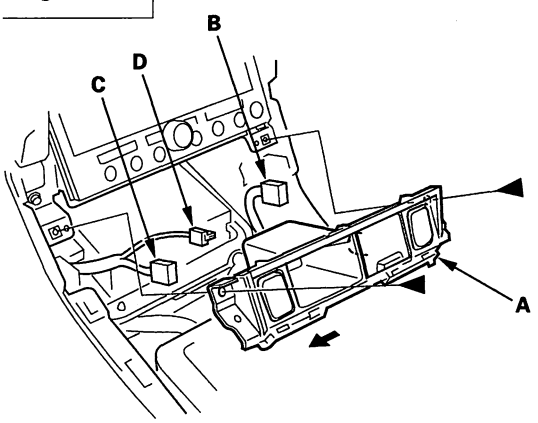


11. Assemble the console in the reverse order of removal.

## Center Console Beverage Holder Replacement

NOTE: Take care not to scratch the center console, dashboard, and related parts.

1. Remove the console center panel (see step 3 on page 20-92).

2. Remove the screws, then remove the center console beverage holder (A) from the center console panel (B).

**Fastener Locations**

▶ : Screw, 7

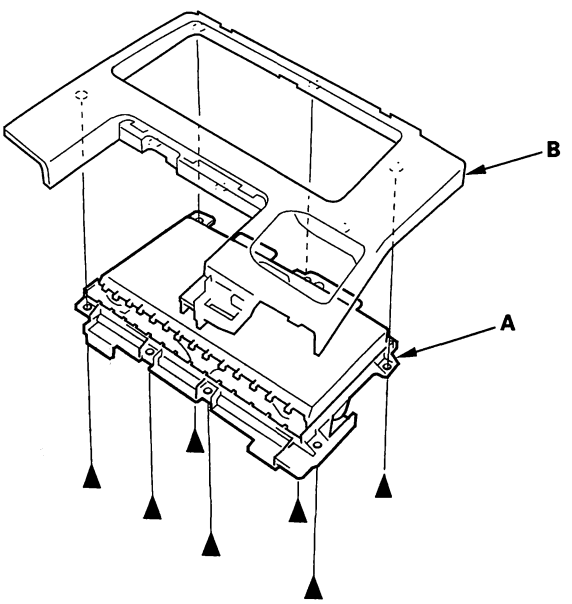


3. Install the beverage holder in the reverse order of removal.

Protected by AR



## Dashboard Side Trim Removal/ Installation

**Special Tools Required**
KTC trim tool set SOJATP2014 *
* Available through the American Honda Tool and Equipment Program; call 888-424-6857

NOTE:
- Put on gloves to protect your hands.
- Use the appropriate tool from the KTC trim tool set to avoid damage when prying components.
- Take care not to scratch the dashboard, and related parts.

1. Using a trim tool, pry up on the front bottom edge of the dashboard side trim (A) to release the clips. Gently pull out the trim to detach the clips, then remove the trim.

**Fastener Locations**
▷ : Clip, 3

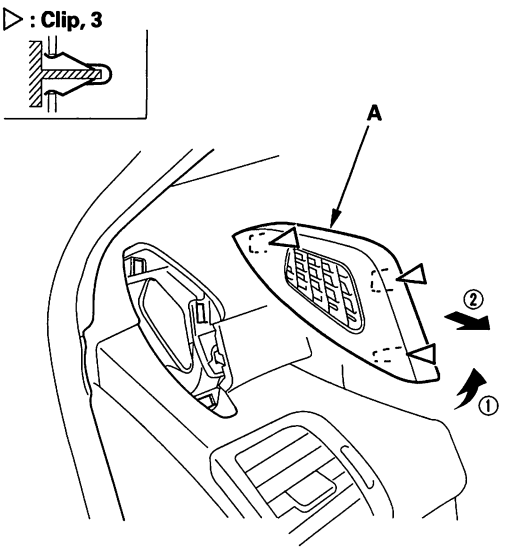


2. Install the trim in the reverse order of removal, and note these items:
   - Check if the clips are damaged or stress-whitened, and if necessary, replace them with new ones.
   - Push the clips into place securely.

## Left Driver's Dashboard Panel Removal/Installation

**Special Tools Required**
KTC trim tool set SOJATP2014 *
* Available through the American Honda Tool and Equipment Program; call 888-424-6857

NOTE:
- Put on gloves to protect your hands.
- Use the appropriate tool from the KTC trim tool set to avoid damage when prying components.
- Take care not to scratch the dashboard, and related parts.

1. Remove the dashboard side trim, left side (see page 20-98)

2. Gently pull out the left driver's dashboard panel (A) to release the clip and hook (B), then remove the panel.

**Fastener Location**
▷ : Clip, 1

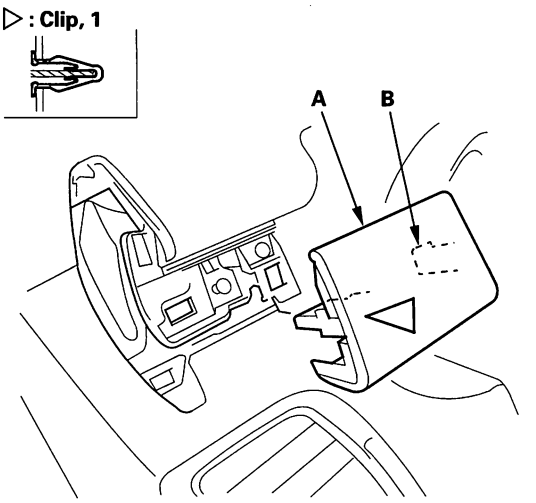


3. Install the panel in the reverse order of removal, and note these items:
   - Check if the clip is damaged or stress-whitened, and if necessary, replace it with a new one.
   - Push the clip and hook into place securely.



BACK

Protected by AR

## Passenger's Dashboard Trim Panel Removal/Installation

**Special Tools Required**
KTC trim tool set SOJATP2014 *
* Available through the American Honda Tool and Equipment Program; call 888-424-6857

NOTE:
- Put on gloves to protect your hands.
- Use the appropriate tool from the KTC trim tool set to avoid damage when prying components.
- Take care not to scratch the dashboard, and related parts.

1. Remove the dashboard side trim, right side (see page 20-98)

2. Gently pull out the trim panel (A) to release the clips, then remove the panel.

**Fastener Locations**
▷ : **Clip, 6**

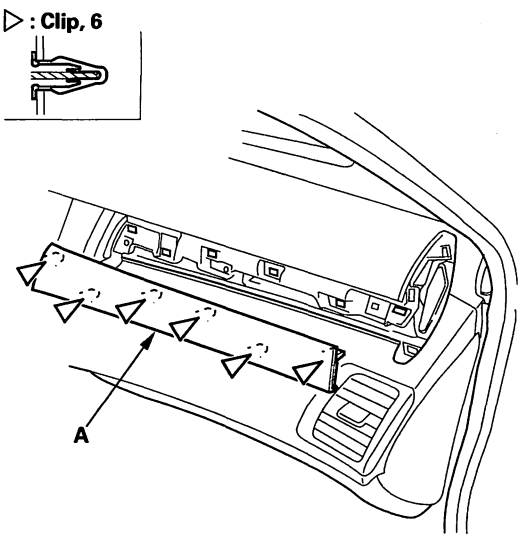


3. Install the panel in the reverse order of removal, and note these items:

   - Check if the clips are damaged or stress-whitened, and if necessary, replace them with new ones.
   - Push the clips into place securely.

## Right Driver's Dashboard Panel Removal/Installation

**Special Tools Required**
KTC trim tool set SOJATP2014 *
* Available through the American Honda Tool and Equipment Program; call 888-424-6857

NOTE:
- Put on gloves to protect your hands.
- Use the appropriate tool from the KTC trim tool set to avoid damage when prying components.
- Take care not to scratch the dashboard, and related parts.

1. Gently pull out the right driver's dashboard center panel (A) to release the clip, then remove the panel.

**Fastener Location**
▷ : **Clip, 1**

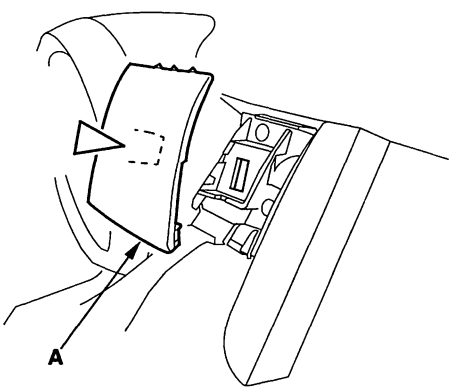


2. Install the panel in the reverse order of removal, and note these items:

   - Check if the clip is damaged or stress-whitened, and if necessary, replace it with a new one.
   - Push the clips into place securely.

Protected by AR



## Center Panel Trim Removal/ Installation

**Special Tools Required**
KTC trim tool set SOJATP2014 *
* Available through the American Honda Tool and Equipment Program; call 888-424-6857

NOTE:
- Put on gloves to protect your hands.
- Use the appropriate tool from the KTC trim tool set to avoid damage when prying components.
- Take care not to scratch the dashboard, and related parts.

1. Remove these items:
   - Right driver's dashboard panel (see page 20-99)
   - Passenger's dashboard trim panel (see page 20-99)
2. Gently pull out the center panel trims (A) to release the clips, then remove the trims.

**Fastener Locations**
▷ : Clip, 4

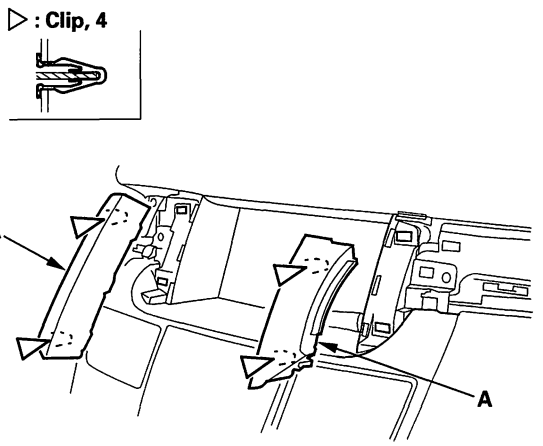


3. Install the trims in the reverse order of removal, and note these items:
   - Check if the clips are damaged or stress-whitened, and if necessary, replace them with new ones.
   - Push the clips into place securely.

## Instrument Panel Removal/ Installation

**Special Tools Required**
KTC trim tool set SOJATP2014 *
* Available through the American Honda Tool and Equipment Program; call 888-424-6857

NOTE:
- Put on gloves to protect your hands.
- Use the appropriate tool from the KTC trim tool set to avoid damage when prying components.
- Take care not to scratch the dashboard, and related parts.

1. Remove these items:
   - Right driver's dashboard panel (see page 20-99)
   - Left driver's dashboard panel (see page 20-98)
2. Release the tilt/telescopic lock lever, and adjust the steering wheel to full tilt down position and to the full telescopic out position.
3. Remove the screws (A).

**Fastener Locations**
A ▶ : Screw, 2  C ▷ : Clip, 5

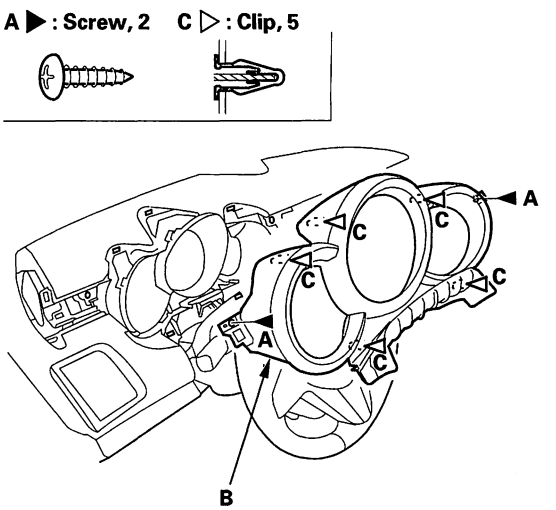


4. Gently pull out the instrument panel (B) to release the clips (C), then remove the panel.
5. Install the panel in the reverse order of removal, and note these items:
   - Check if the clips are damaged or stress-whitened, and if necessary, replace them with new ones.
   - Push the clips into place securely.



BACK

Protected by AR

# Center Panel Removal/Installation

**Special Tools Required**
KTC trim tool set SOJATP2014 *
* Available through the American Honda Tool and Equipment Program; call 888-424-6857

NOTE:
- Put on gloves to protect your hands.
- Use the appropriate tool from the KTC trim tool set to avoid damage when prying components.
- Take care not to scratch the dashboard, and related parts.

1. Remove these items:

   - Right driver's dashboard panel (see page 20-99)
   - Passenger's dashboard trim panel (see page 20-99)
   - Center panel trim (see page 20-100)

2. Remove the center panel (A).

   -1 Remove the screws (B).
   -2 Gently pull out the panel to release the clips (C, D), then remove the panel.
   -3 Disconnect the climate switch connectors (E), hazard warning switch connector (F) and audio switch connectors (G).

**Fastener Locations**

**B ▶ : Screw, 2 C ▷ : Clip, 2 D ▷ : Clip, 1**

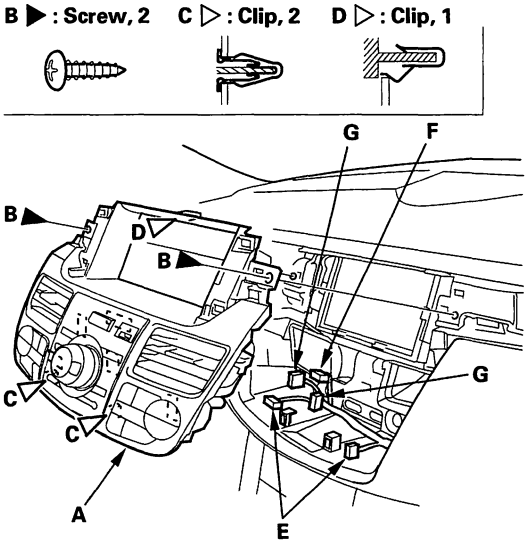


3. Install the panel in the reverse order of removal, and note these items:

   - Check if the clips are damaged or stress-whitened, and if necessary, replace them with new ones.
   - Push the clips into place securely.
   - Make sure the connectors are plugged in properly.

BACK

Protected by AR



## Driver's Dashboard Undercover Removal/Installation

NOTE: Take care not to scratch the dashboard, and related parts.

1. Remove the driver's dashboard undercover (A).

   -1 Turn the lock knob (B) 90 °.
   -2 Gently pull down the right side edge to detach the clips.

**Fastener Locations**

▷ : **Clip, 2**

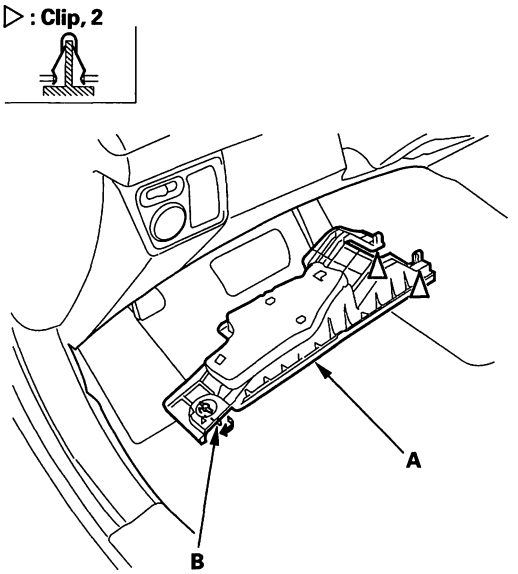


2. Install the undercover in the reverse order of removal, and note these items:

   - Check if the clips are damaged or stress-whitened, and if necessary, replace them with new ones.
   - Push the clips into place securely.

## Driver's Switch Panel Removal/ Installation

**Special Tools Required**
KTC trim tool set SOJATP2014 *
* Available through the American Honda Tool and Equipment Program; call 888-424-6857

NOTE:
- Put on gloves to protect your hands.
- Use the appropriate tool from the KTC trim tool set to avoid damage when prying components.
- Take care not to scratch the dashboard, and related parts.

1. Remove the driver's switch panel (A).

   -1 Pull out the bottom of the panel to release the clips, and pull it down to release the hooks (B).
   -2 Disconnect the power mirror switch connectors (C) and VSA OFF switch connectors (D).

**Fastener Locations**

▷ : **Clip, 2**

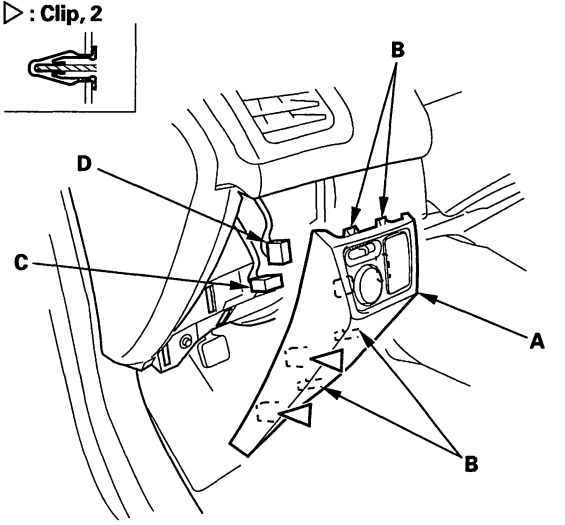


2. Install the panel in the reverse order of removal, and note these items:

   - Check if the clips are damaged or stress-whitened, and if necessary, replace them with new ones.
   - Push the clips into place securely.
   - Make sure the connectors are plugged in properly.



BACK

Protected by AR

## Dashboard Side Vent Removal/ Installation

NOTE: Take care not to scratch the dashboard, and related parts.

1. Remove the driver's switch panel (see page 20-102). For of the right side outlet: Detach the hook of the glove box damper and release the glove box stop on each side from the dashboard by pushing them inside (see step 2 on page 20-104).

2. Push the back of the dashboard side vent (A) by hand from the driver's switch panel or glove box opening to release the hooks (B) on the side vent. Gently pull out the side vent to remove it.

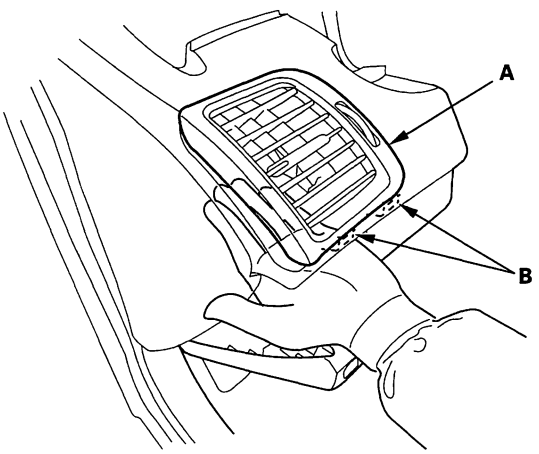


3. Install the side vent in the reverse order of removal.

## Passenger's Dashboard Undercover Removal/Installation

NOTE: Take care not to scratch the dashboard, and related parts.

1. Remove the passenger's dashboard undercover (A).

   -1 Gently pull down the front edge to detach the clips.
   -2 Pull the cover away to release the pins (B) of the cover from the holders.

**Fastener Locations**

▷ : **Clip, 3**

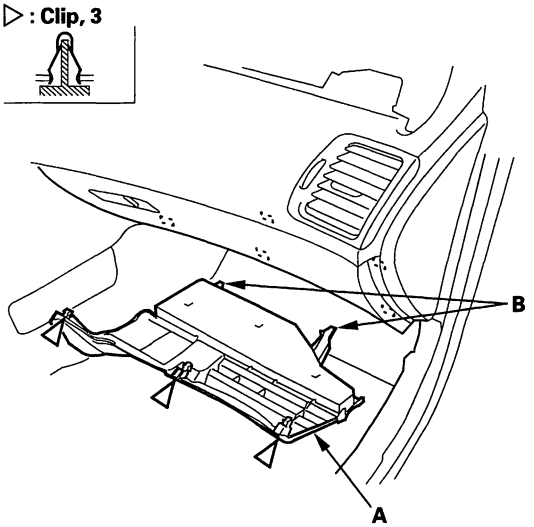


2. Install the undercover in the reverse order of removal, and note these items:

   - Check if the clips are damaged or stress-whitened, and if necessary, replace them with new ones.
   - Push the clips into place securely.

Protected by AR



## Glove Box Removal/Installation

NOTE: Take care not to scratch the dashboard, and related parts.

1. Remove the bolts.

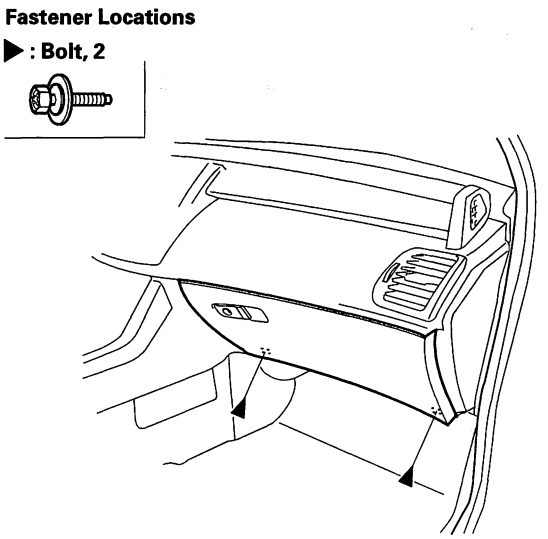


2. Detach the hook (A) of the glove box damper. While holding the glove box (B), push in on the stops (C) to release them from the glove box.

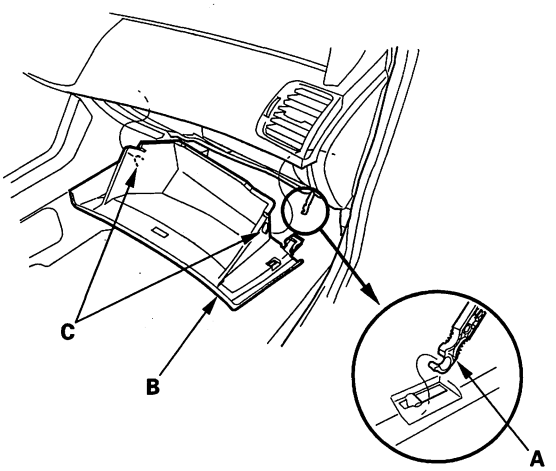


3. Install the glove box in the reverse order of removal.

## Glove Box Damper Replacement

NOTE: Take care not to scratch the dashboard, and related parts.

1. Remove these items:
   - Glove box (see page 20-104)
   - Dashboard side lid right side (see step 4 on page 20-108)

2. Detach the clip of the glove box damper (A) by pinching it to release from inside the dashboard, then remove the damper.

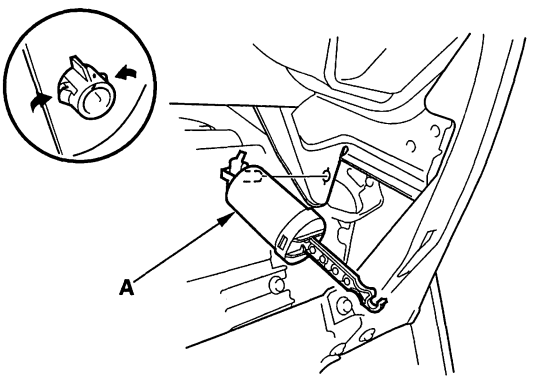


3. Install the damper in the reverse order of removal.



BACK

Protected by AR

## Glove Box Striker Replacement

NOTE: Take care not to scratch the dashboard, and related parts.

1. Detach the hook of the glove box damper and release the glove box stop on each side from the dashboard by pushing them inside (see step 2 on page 20-104).

2. Remove the screws, then remove the glove box striker (A).

**Fastener Locations**

**▶ : Screw, 3**

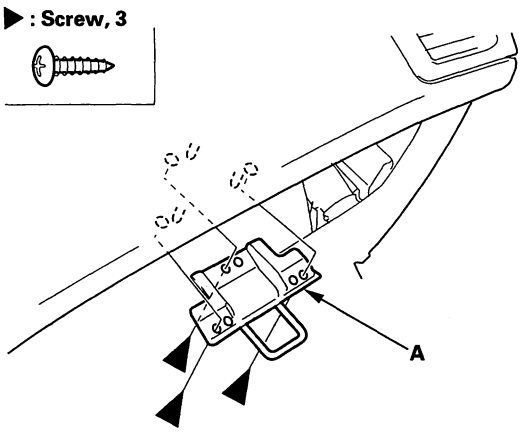


3. Install the striker in the reverse order of removal.

## Center Upper Dashboard Panel Removal/Installation

**Special Tools Required**

KTC trim tool set SOJATP2014 *

* Available through the American Honda Tool and Equipment Program; call 888-424-6857

NOTE:
- Put on gloves to protect your hands.
- Use the appropriate tool from the KTC trim tool set to avoid damage when prying components.
- Take care not to scratch the dashboard, and related parts.

1. Pry up on the edge of the center upper dashboard panel (A) with a trim tool to detach the clips. Gently pull out panel to release the clips from the dashboard.

**Fastener Locations**

**▷ : Clip, 5**

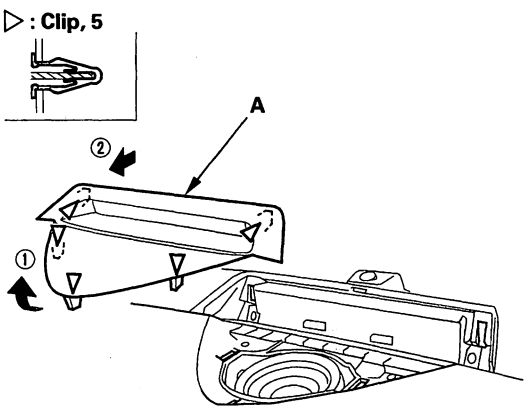


2. Install the panel in the reverse order of removal, and note these items:

   - Check if the clips are damaged or stress-whitened, and if necessary, replace them with new ones.
   - Push the clips into place securely.

BACK

Protected by AR



## Upper Dashboard Panel Removal/Installation

**Special Tools Required**
- KTC trim tool set SOJATP2014 *
- Trim pad remover, Snap-on A 177A or equivalent, commercially available

* Available through the American Honda Tool and Equipment Program; call 888-424-6857

SRS components are located in this area. Review the SRS component locations (see page 24-12) and the precautions and procedures (see page 24-14) before doing repairs or service.

NOTE:
- Put on gloves to protect your hands.
- Use the appropriate tool from the KTC trim tool set to avoid damage when prying components.
- Take care not to bend or scratch the dashboard, and related parts.

1. Remove these items:
   - Center upper dashboard panel (see page 20-105)
   - Right driver's dashboard panel (see page 20-99)
   - Dashboard side trim, both sides (see page 20-98)
   - Passenger's dashboard trim panel (see page 20-99)
   - Center panel (see page 20-101)
   - Instrument panel (see page 20-100)
   - Gauge control module (see page 22-284)
2. Disconnect the front passenger's airbag 4P connector and three mounting nuts of the front passenger's airbag (see page 24-147).
3. Remove the screws.

**Fastener Locations**

**▶ : Screw, 7**

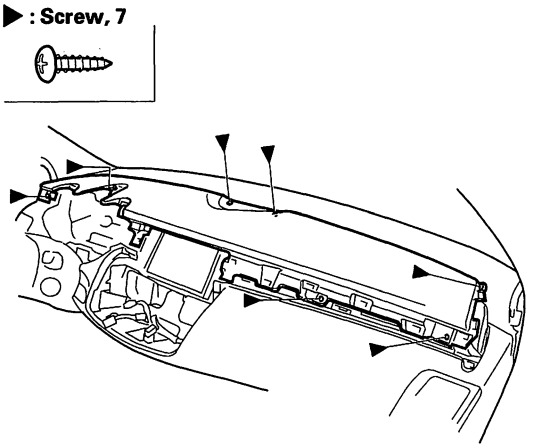

4. Detach the clips along the front edge of the upper dashboard panel (A). Gently pull up the panel to release the hooks from the dashboard (B).

**Fastener Locations**

**▷ : Clip, 11**

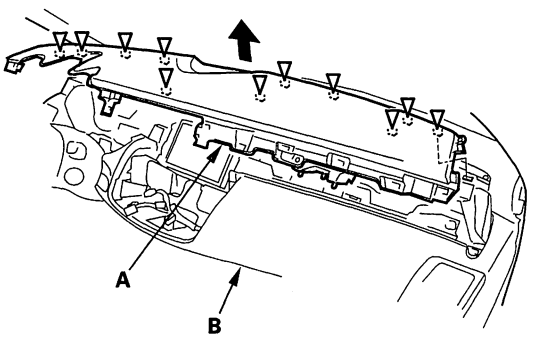


5. If necessary, remove the front passenger's airbag from the upper dashboard panel (see step 5 on page 24-147).
6. Install the panel in the reverse order of removal, and note these items:
   - Check if the clips are damaged or stress-whitened, and if necessary, replace them with new ones.
   - Push the clips into place securely.



BACK

Protected by AR

## Column Cover Removal/Installation

SRS components are located in this area. Review the SRS component locations (see page 24-12) and the precautions and procedures (see page 24-14) before doing repairs or service.

NOTE:
- Put on gloves to protect your hands.
- Use the appropriate tool from the KTC trim tool set to avoid damage when prying components.
- Take care not to scratch the dashboard, and related parts.

1. Release the tilt/telescopic lock lever, and adjust the steering wheel to full tilt down position and to the full telescopic out position.

2. Turn the steering wheel to left and remove the screw (A). Release the hook (B) of the upper column cover (C) while pushing the cover from the front side.

**Fastener Locations**

**A, D ▶ : Screw, 2  H ▶ : Screw, 1  I ▶ : Screw, 2**

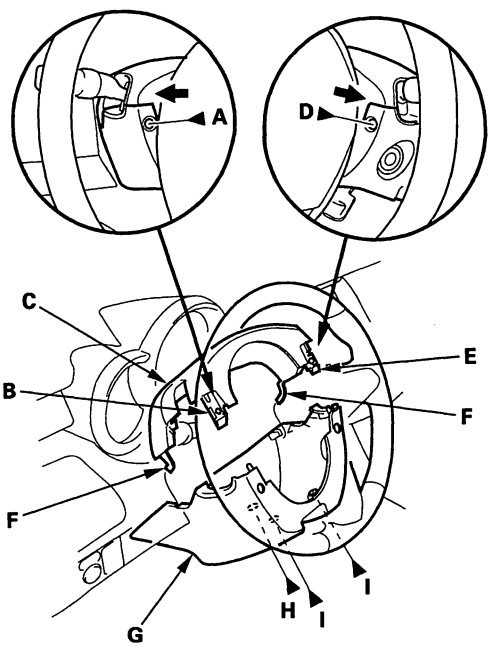


3. Turn the steering wheel to the right and remove the screw (D). Release the hook (E) of the upper column cover is in the same as the step 2.

4. Separate the upper column cover from the lower column cover by pulling up it lightly. Release the hooks (F) of the cover to remove it from the lower column cover (G).

5. Remove the screws (H, I), and remove the lower column cover from the steering column.

6. Install the covers in the reverse order of removal, and push the hooks into place securely.

Protected by AR



## Dashboard Replacement

**Special Tools Required**
KTC trim tool set SOJATP2014 *
* Available through the American Honda Tool and Equipment Program; call 888-424-6857

SRS components are located in this area. Review the SRS component locations (see page 24-12) and the precautions and procedures (see page 24-14) before doing repairs or service.

NOTE:
- Have an assistant help you when removing and installing the dashboard.
- Put on gloves to protect your hands.
- Use the appropriate tool from the KTC trim tool set to avoid damage when prying components.
- Take care not to scratch the dashboard, and related parts.

1. Make sure you have the anti-theft codes for the audio and the navigation system (if equipped), then write down the audio presets.

2. Disconnect the negative cable from the battery, and wait at least 3 minutes before beginning work.

3. Remove these items:

   - Front seats, both sides (see page 20-118)
   - Center console (see page 20-92)
   - Steering column (see page 17-25)
   - Driver's switch panel (see page 20-102)
   - Upper dashboard panel (see page 20-106)
   - Center panel (see page 20-101)
   - Glove box (see page 20-104)
   - Driver's dashboard undercover (see page 20-102)
   - Passenger's dashboard undercover (see page 20-103)
   - Gauge control module (see page 22-284)
   - Audio unit (see page 23-99)
   - Navigation display unit, with navigation system (see page 23-191)
   - Audio-HVAC display unit, without navigation system (see page 23-101)
   - Front center speaker (see page 23-102)
   - Audio-HVAC subdisplay unit, with navigation system (see page 23-101)
   - Sunlight sensor (see page 21-80)
   - In-car temperature sensor (see page 21-78)
   - A-pillar trim, both sides (see page 20-69)
   - Kick panel, both sides (see step 4 on page 20-67)

**Driver's side**

4. Using a KTC trim tool, pry up on the front bottom edge of the dashboard side lid (A) to release the clips. Gently pull out to release the hooks (B), then remove the lid. Repeat on the other side of the dashboard.

**Fastener Locations**
▷ : Clip, 3

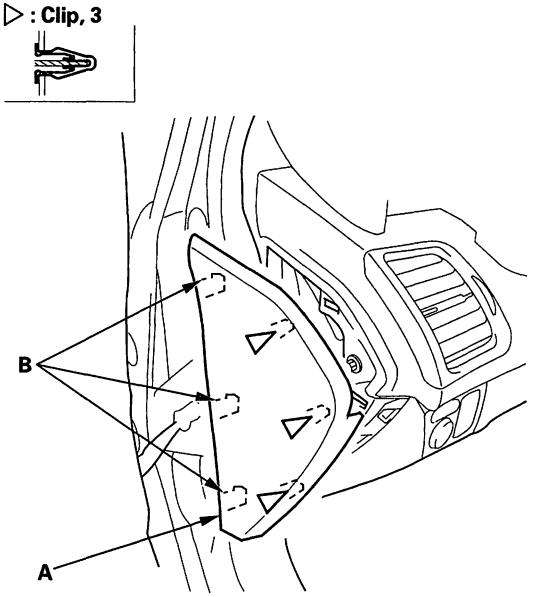


5. Remove the screws, then remove the GPS antenna bracket (A) (with navigation system), then push the antenna out through the hole in the dashboard.

**Fastener Locations**
▶ : Screw, 2

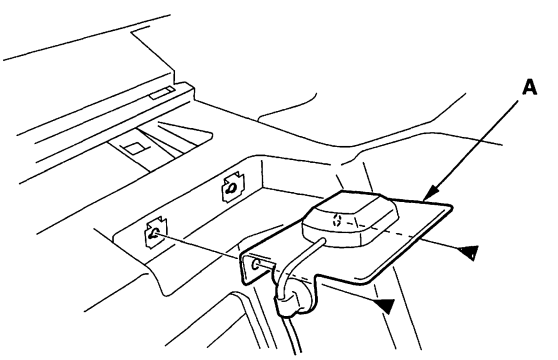




BACK

Protected by AR

**Center**

6. Detach the wire harness clip (A) from the center upper dashboard panel opening.

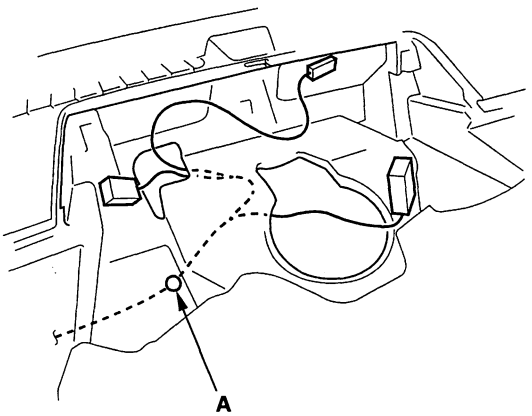


7. Detach the wire harness clips (A) from center panel opening.

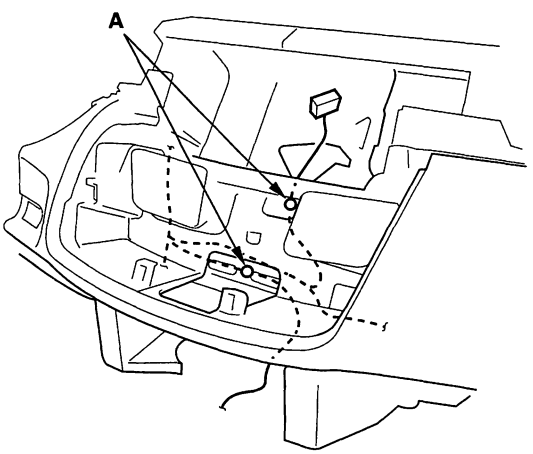


**Passenger's side**

8. Disconnect the antenna 2P connector (A), and detach the wire harness clips (B) from the glove box opening.

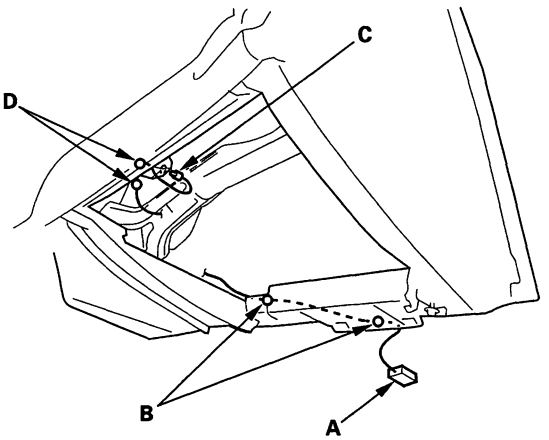


9. Carefully pry the glove box light (C) from the inside of the dashboard, and detach the wire harness clips (D).

(cont'd)

Protected by AR



## Dashboard Replacement (cont'd)

10. From the front of the dashboard (A), remove the screws (B) and bolts (C).

**Fastener Locations**

**B ▶ : Screw, 2  C ▶ : Bolt, 11**

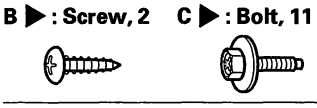

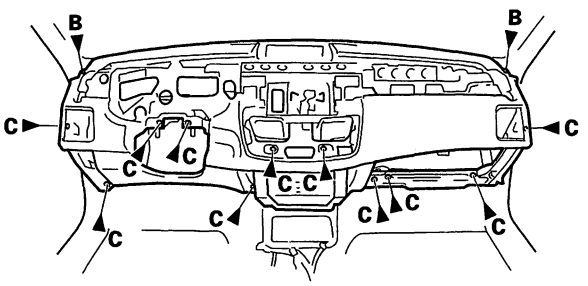


11. Lift up on the dashboard (A) to release it from the guide pins (B), then carefully remove the dashboard through the front door opening.

NOTE: Lay the dashboard on its front or back. Do not rest it on the lower console opening or you may damage it.

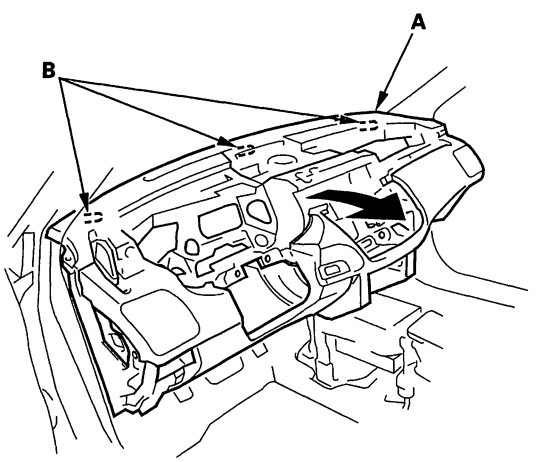


12. Install the dashboard in the reverse order of removal, and note these items:

- Make sure the dashboard fits onto the guide pins correctly.
- Before tightening the bolts, make sure the wire harnesses are not pinched.
- Make sure the connectors are plugged in properly.
- Reconnect the negative cable to the battery.
- Enter the anti-theft codes for the audio and the navigation system (if equipped), then enter the audio presets.
- Check for any DTCs that may have been set during repairs, and clear them.



BACK

Protected by AR

# Dashboard/Steering Hanger Beam Removal/Installation

**Special Tools Required**
KTC trim tool set SOJATP2014 *
* Available through the American Honda Tool and Equipment Program; call 888-424-6857

SRS components are located in this area. Review the SRS component locations (see page 24-12) and the precautions and procedures (see page 24-14) before doing repairs or service.

NOTE:
- Have an assistant help you when removing and installing the dashboard.
- Put on gloves to protect your hands.
- Use the appropriate tool from the KTC trim tool set to avoid damage when prying components.
- Take care not to scratch the dashboard, and related parts.

1. Make sure you have the anti-theft codes for the audio and the navigation system (if equipped), then write down the audio presets.

2. Disconnect the negative cable from the battery, and wait at least 3 minutes before beginning work.

3. Remove these items:

   - Front seats, both sides (see page 20-118)
   - Center console (see page 20-92)
   - Steering column (see page 17-25)
   - Glove box (see page 20-104)
   - Driver's dashboard undercover (see page 20-102)
   - Passenger's dashboard undercover (see page 20-103)
   - In-car temperature sensor (see page 21-78)
   - A-pillar trim, both sides (see page 20-69)
   - Kick panel, both sides (see step 4 on page 20-67)
   - Dashboard side lid, passenger's side (see step 4 on page 20-108)

**Driver's side**

4. From under the dash, disconnect the left side wire harness connectors (A), engine compartment wire harness connectors (B), are the roof wire harness connector (C).

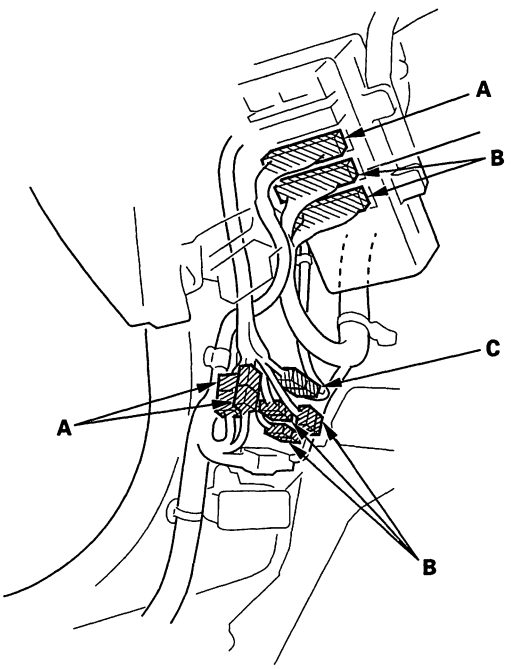


5. From under the dash, disconnect the driver's door wire harness connectors (A), and the left TPMS subharness connector (B).

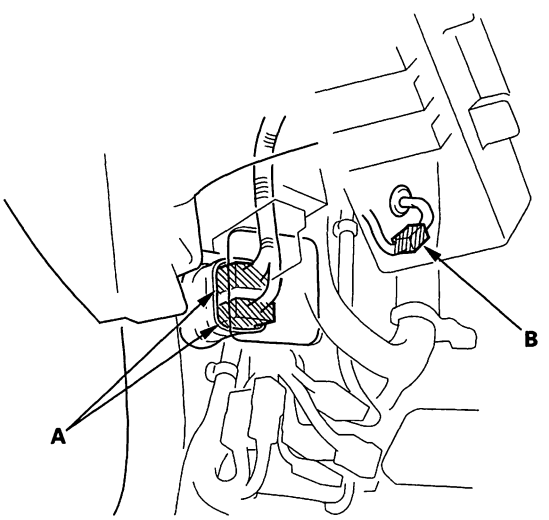


(cont'd)

BACK

Protected by AR



## Dashboard/Steering Hanger Beam Removal/Installation (cont'd)

**Center**

6. From under the dash, disconnect the A/T gear position indicator panel light/park pin switch connector (A), A/T shift lock solenoid connector (B), SRS control unit connector A (C), yaw rate-lateral acceleration sensor connector (D), SRS wire harness connector (E).

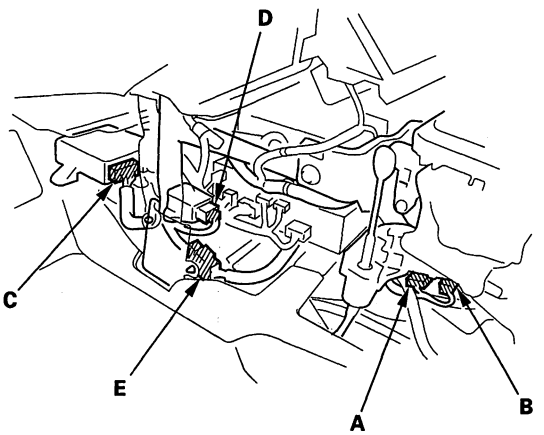


7. From under the dash, disconnect the HandsFreeLink control unit connector (A). Using a T30 TORX bit, remove the ground bolt (B), and release the wire harness clips (C).

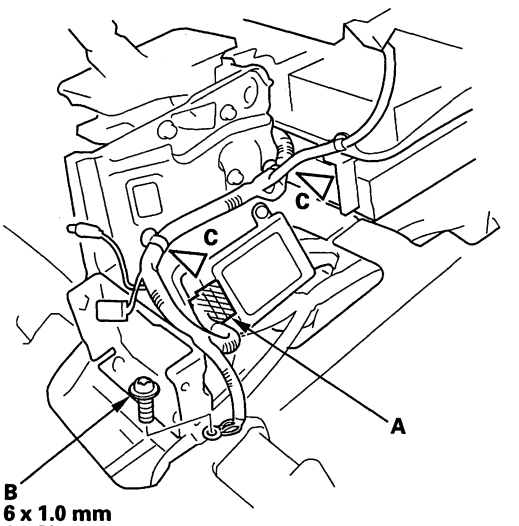


**6 x 1.0 mm**
**9.8 N·m**
**(1.0 kgf·m, 7.2 lbf·ft)**
Use a T30 TORX bit.



BACK

Protected by AR

**Passenger's side**

8. From under the dash, disconnect the XM receiver connector or AcuraLink control unit connectors (with navigation system) (A), engine compartment wire harness connectors (B), antenna connector (C), and the right side wire harness connectors (D).

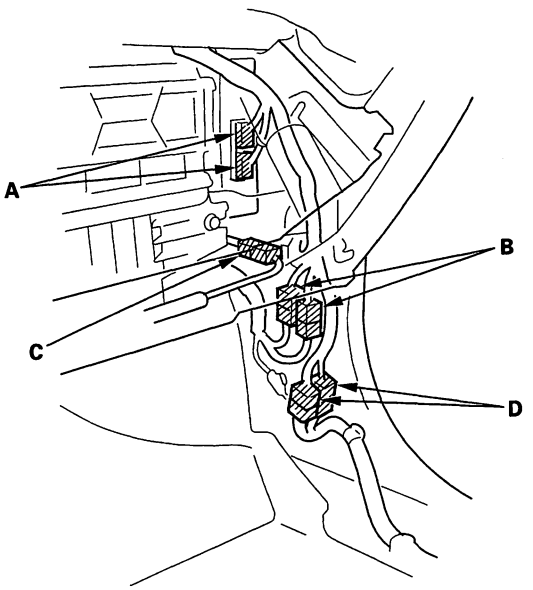


9. From under the dash, disconnect the right TPMS subharness connector (A), and the front passenger's door wire harness connectors (B).

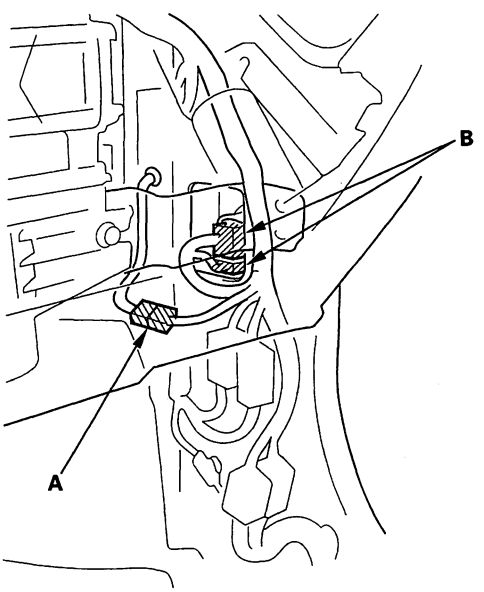


10. From under the dash, disconnect the climate control unit connector (A), and release the wire harness clip (B).

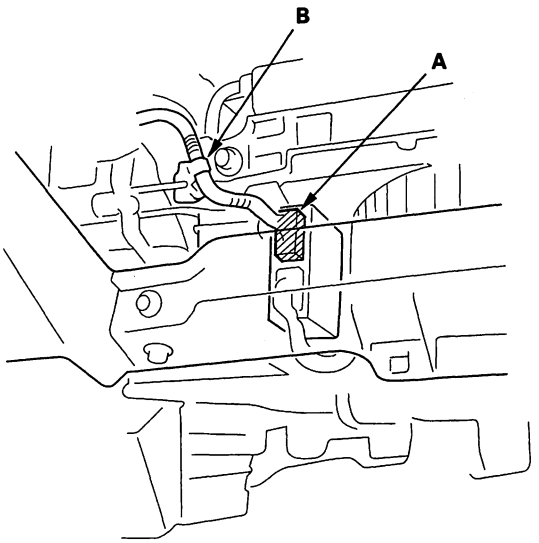


11. Detach the clip, then remove the rear heater joint (A).

**Fastener Location**

▷ : **Clip, 1**

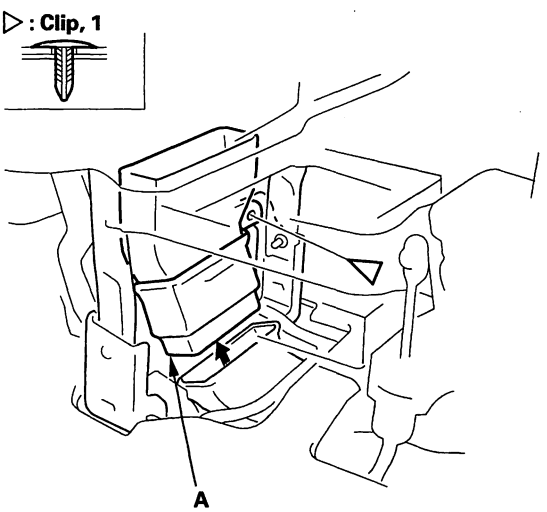


(cont'd)

Protected by AR



## Dashboard/Steering Hanger Beam Removal/Installation (cont'd)

12. Remove the bolts (A, B), and remove the center brackets (C) from the dashboard center frame (D).

**Fastener Locations**

**A ▶ : Bolt, 2  B ▶ : Bolt, 2**

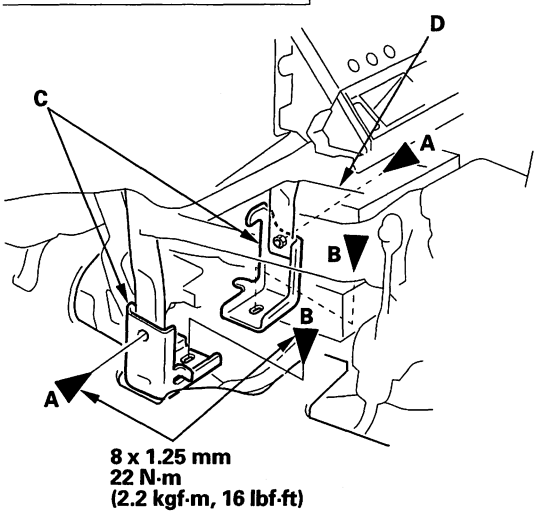


13. Remove the bolts of the A/T lever bracket (A), then separate the A/T lever bracket from the center frame (B) by moving to the driver's side. Do not disconnect of the A/T shift cable.

**Fastener Locations**

**▶ : Bolt, 3**

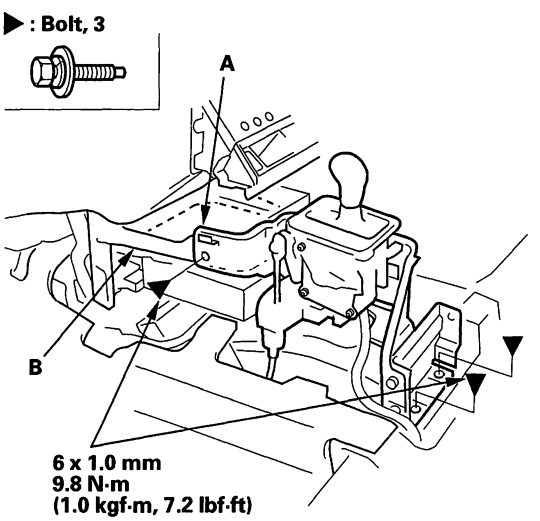


14. From the driver's side: Remove the bolt (A) from brake pedal bracket, and remove the nut (B) from the body.

15. From passenger's side: Remove the bolts (C) from the holes of the steering hanger beam.

**Fastener Locations**

**A ▶ : Bolt, 1  B ● : Nut, 1  C, E ▶ : Bolt, 4**

**F ▶ : Bolt, 1**

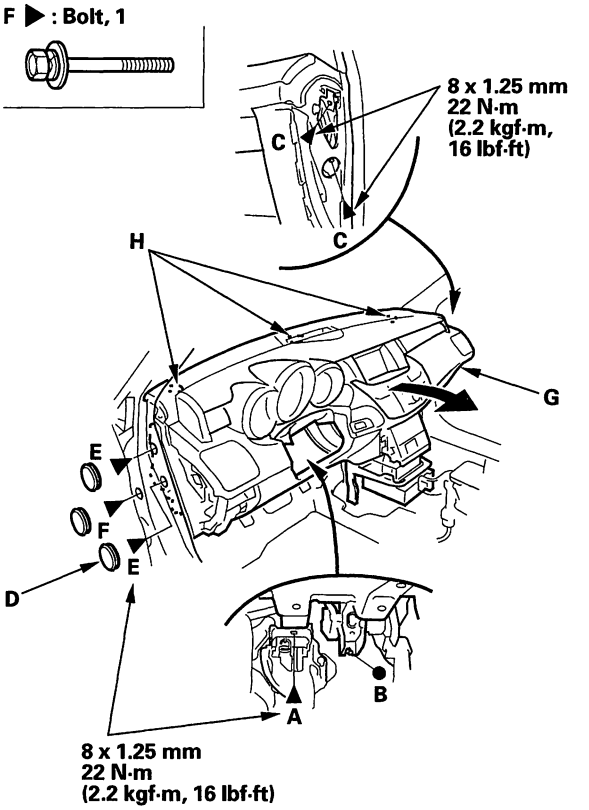


16. Remove the caps (D), then remove the bolts (E, F), and lift up on the dashboard/steering hanger beam (G) to release it from the guide pins (H) on the body.

NOTE: Before removing the dashboard/steering hanger beam, make sure all the harnesses have been disconnected.

17. Carefully remove the dashboard/steering hanger beam through the front door opening or you may damage it.



BACK

Protected by AR

18. Install the dashboard/steering hanger beam in the reverse order of removal, and note these items:

    - Reinstall the center brackets on the center frame, and slightly tighten the mounting bolts. Reinstall the dashboard on the body. After tightening the dashboard mounting bolts and nut, tighten the center bracket mounting bolts and center frame mounting bolts.
    - Make sure the dashboard/steering hanger beam fits onto the guide pins correctly.
    - Apply liquid thread lock to the bolts securing the center bracket and the dashboard before reinstallation.
    - Before tightening the bolts, make sure the wire harnesses are not pinched.
    - Make sure the connectors are plugged in properly.
    - Reconnect the negative cable to the battery.
    - Enter the anti-theft codes for the audio and the navigation system (if equipped), then enter the audio presets.
    - Check for any DTCs that may have been set during repairs, and clear them.

Protected by AR



## Component Location Index

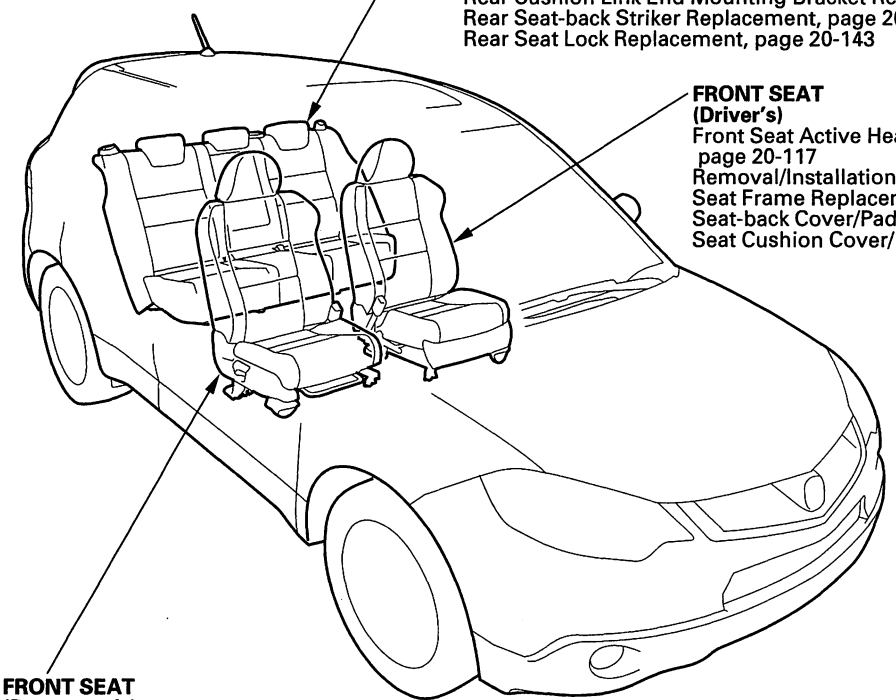

**REAR SEAT**
Removal/Installation, page 20-137
Armrest Beverage Holder Replacement, page 20-136
Armrest Replacement, page 20-135
Seat-back Cover/Pad Replacement, page 20-139
Seat Side Bolster Cover Replacement, page 20-143
Seat Cushion Cover/Pad Replacement, page 20-144
Rear Cushion Link End Mounting Bracket Replacement, page 20-138
Rear Seat-back Striker Replacement, page 20-139
Rear Seat Lock Replacement, page 20-143

**FRONT SEAT**
**(Driver's)**
Front Seat Active Headrest Inspection, page 20-117
Removal/Installation, page 20-118
Seat Frame Replacement, page 20-121
Seat-back Cover/Pad Replacement, page 20-126
Seat Cushion Cover/Pad Replacement, page 20-131

**FRONT SEAT**
**(Passenger's)**
Front Seat Active Headrest Inspection, page 20-117
Removal/Installation, page 20-118
Seat Frame Replacement, page 20-121
Seat-back Cover/Pad Replacement, page 20-126
Seat Cushion Cover/Pad Replacement, page 20-131



BACK

Protected by AR

# Front Seat Active Headrest Inspection

NOTE: If the vehicle has been in a collision, always inspect the active headrests, even if they appear reusable, by doing the following procedure.

## Resetting Headrest Position

1. Push the head restraint (A) forward fully from the locked position to return the inside inertia lock (B).

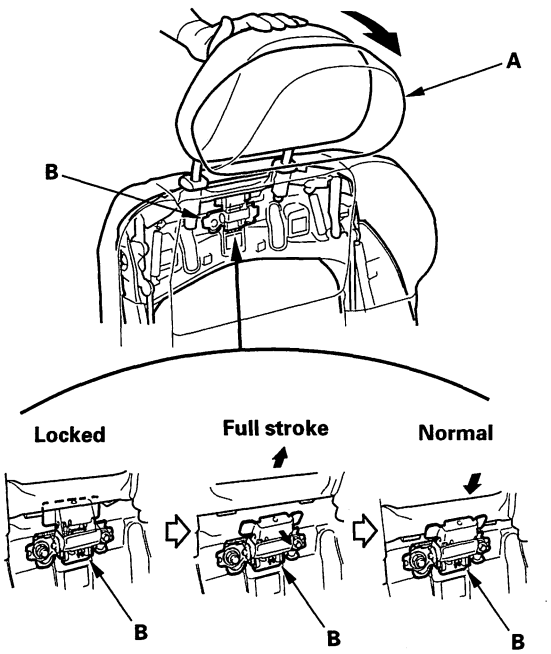


2. Slowly raise the head restraint into the normal position.

**Inspection**

3. Fold the seat-back forward, then recline the seat-back to the first lock position, and adjust the head restraint to the head restraint position.

4. Apply masking tape on the top of the head restraint.

5. Make marks (A) on both sides at 250 mm (9.84 in.) upward from the roots of the head restraint frame (B) along the back of the head restraint (C) surface. Make a center of these points as a datum point (D).

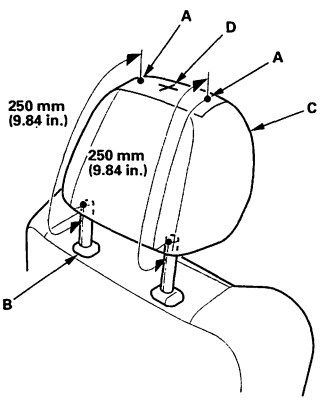


6. Push the head restraint (A) forward, and check: With a scale, measure the level amount of the head restraint movement. The head restraint should move than 50 mm (2.0 in.) without resistance. If it is less than 50 mm (2.0 in.), or the head restraint doesn't move smoothly, replace the seat-back frame assembly:

   - Passenger's seat (see page 20-121)
   - Driver's seat (see page 20-122)

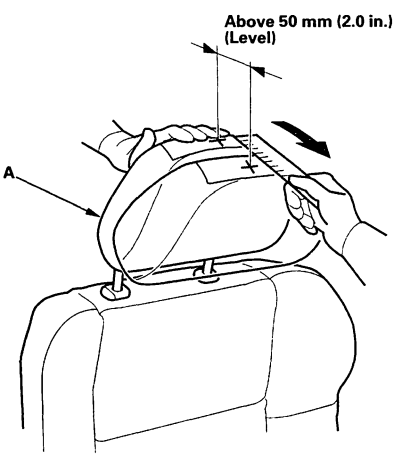

Protected by AR



## Front Seat Removal/Installation

**Special Tools Required**
KTC trim tool set SOJATP2014 *
* Available through the American Honda Tool and Equipment Program; call 888-424-6857

SRS components are located in this area. Review the SRS component locations (see page 24-12) and the precautions and procedures (see page 24-14) before doing repairs or service.

NOTE:
- Put on gloves to protect your hands.
- When prying with a flat-tip screwdriver, wrap it with protective tape to prevent damage.
- Take care not to scratch the body or tear the seat covers.
- Use the appropriate tool from the KTC trim tool set to avoid damage when prying components.

1. Make sure you have the anti-theft code for the audio and the navigation system (if equipped), then write down the audio presets.

2. Tilt the steering wheel all the way up, and telescope it all the way in.

3. Slide the front seat forward fully, then move it to the lowest position (driver's seat).
   Driver's seat: Carefully push in on the bottom edge of the anchor cover (A) to release the lock tab (B) then slide the cover up to release the hooks (C), and remove the cover.
   Passenger's seat: Carefully pry up on the bottom edge of the anchor cover (D) to release the hooks (E), and remove the cover.

**Driver's seat**

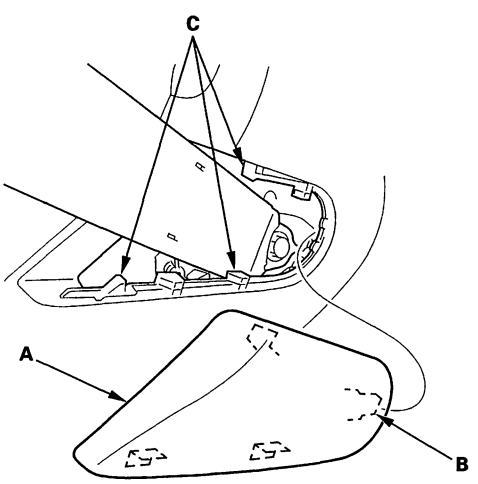


**Passenger's seat**

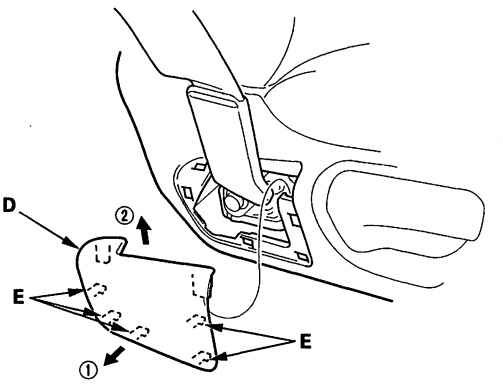


4. Remove the seat belt lower anchor bolt (A).

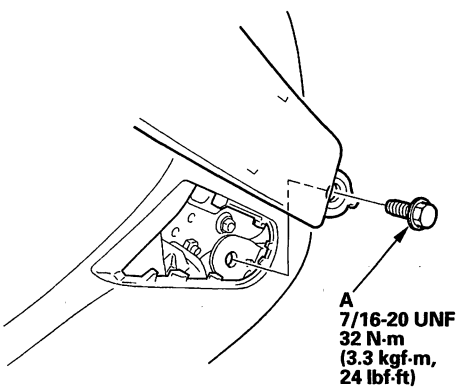


5. Raise the seat fully, and slide it halfway to the rear so you can access the seat mounting bolts.

6. Slide the seat all the way forward, and remove the rear outer seat track end covers (A) and rear inner seat track end covers (B).

**Outer seat track end cover, driver's seat rear**

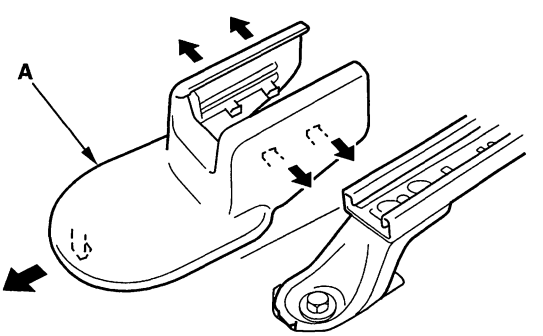




BACK

Protected by AR

**Inner seat track end cover, driver's seat rear**

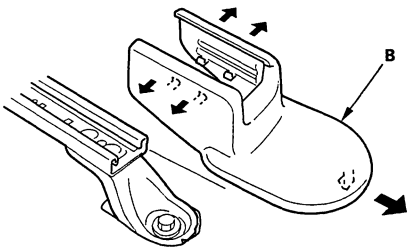


**Outer seat track end cover, passenger's seat rear**

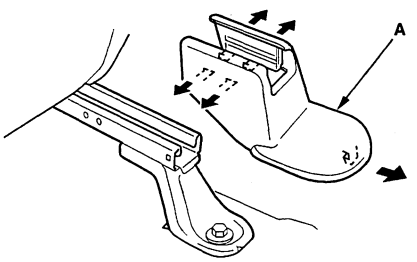


**Inner seat track end cover, passenger's seat rear**

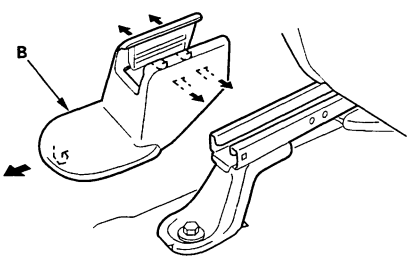


7. Remove the bolts.

**Fastener Locations**

**▶ : Bolt, 2**

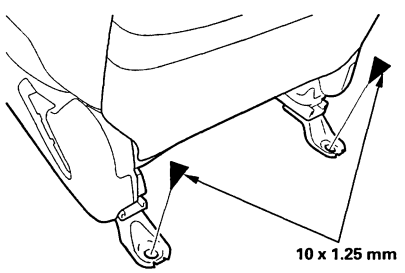


8. Slide the seat all the way back.

9. Passenger's seat: Remove the outer seat track end cover (A) and inner seat track end cover (B).

**Outer seat track end cover, passenger's seat front**

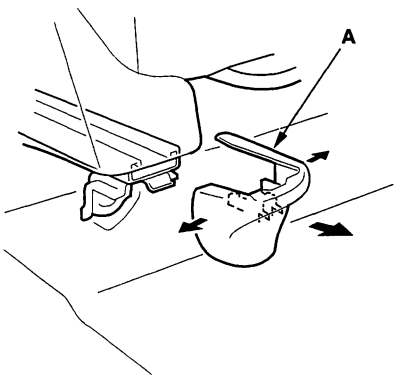


**Inner seat track end cover, passenger's seat front**

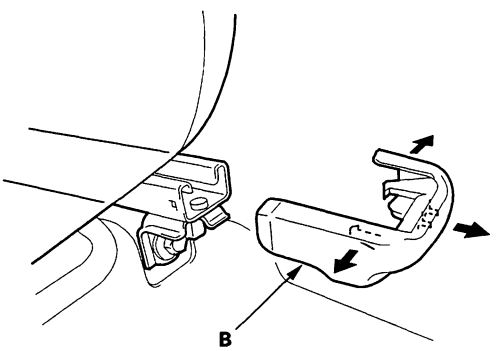


10. Remove the bolts securing the front seat (A).

**Fastener Locations**

**▶ : Bolt, 2**

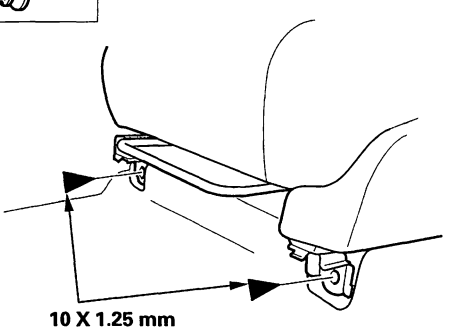


11. Disconnect the negative cable from the battery, and wait at least 3 minutes before removing the seat.

(cont'd)

Protected by AR



## Front Seat Removal/Installation (cont'd)

12. Lift up the front seat, then detach the harness clips (A), and disconnect the side airbag connector (B), the seat belt buckle tensioner connector (C), driver's seat wire harness connector (D), ODS unit harness connector (E).

**Passenger's seat**

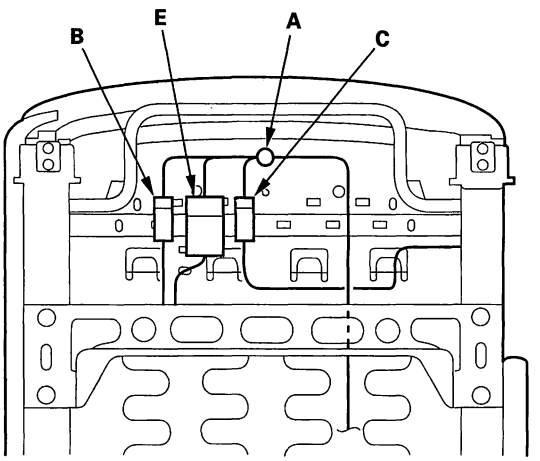


**Driver's seat**

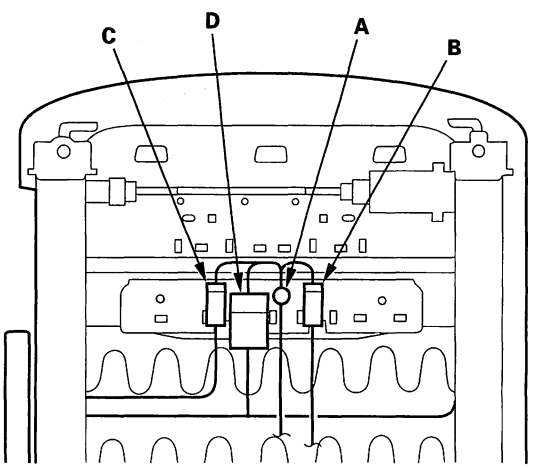


13. With the help of an assistant, carefully remove the front seat through the front door opening.

14. Install the seat in the reverse order of removal, and note these items:

- Apply medium strength type liquid thread lock to the seat mounting bolts before reinstallation.
- Tighten the seat mounting bolts to the specified torque in the sequence shown. Slide the seat all the way back and tighten ① and ②, then slide it forward and tighten ③ and ④. The driver's seat is shown; the passenger's seat is similar.
- Make sure each connector is plugged in properly.
- Tighten the bolts by hand first, then tighten them to specification with a torque wrench.
- Reconnect the negative cable to the battery.
- Enter the anti-theft code for the audio or the navigation system, then enter the audio presets.
- Set the clock.
- Check for any DTCs that may have been set during repairs, and clear them.

**Fastener Locations**

▶ : Bolt, 4

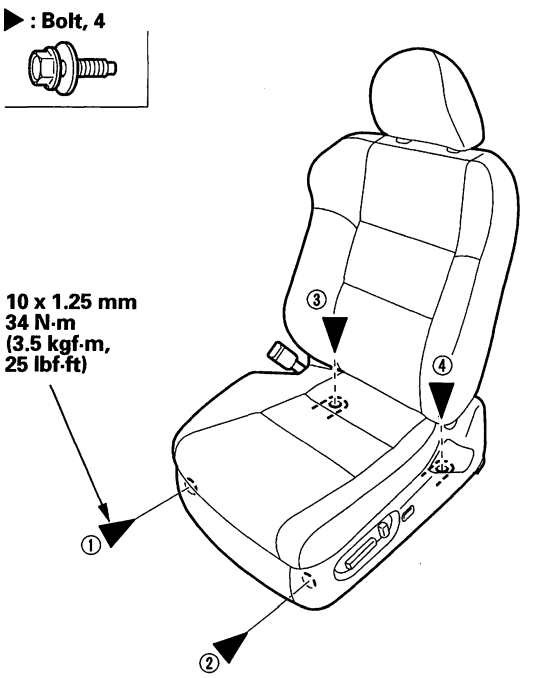




BACK

Protected by AR

# Front Seat Frame Replacement

## Passenger's Seat

Calibrate the ODS unit after any of these actions (see page 24-29):

- Front passenger's seat replacement (including any seat components)
- Replacement of the seat weight sensors
- After a vehicle collision

NOTE:
- Put on gloves to protect your hands.
- Apply oil to the pivot portions of the slide locks.
- Apply multipurpose grease to the sliding portions of the seat tracks.
- If the side airbag has deployed, replace the seat frame and related parts with new ones (see page 24-143).

1. Remove the front seat (see page 20-118).

2. Remove these items:

   - Front seat-back cover (see page 20-126)
   - Front seat cushion cover (see page 20-131)
   - ODS unit (see page 24-167)

3. Gently pull out the center cover (A), then detach the clip, and release the hooks (B).

**Fastener Location**

▷ : **Clip, 1**

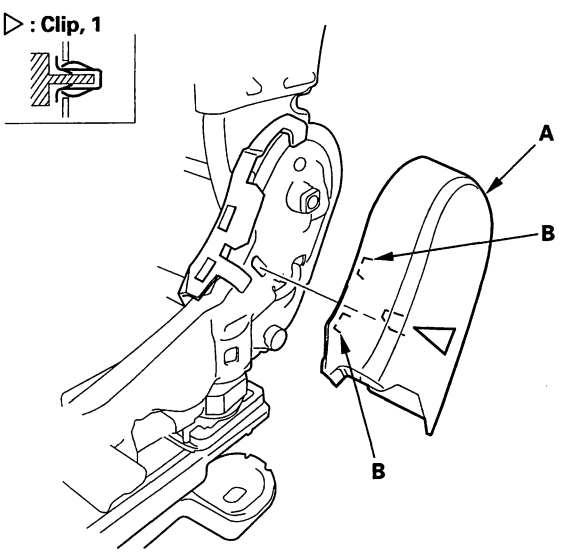


4. Remove the clips, then remove the recline inner covers (A) from the seat frame (B).

**Fastener Locations**

▷ : **Clip, 4**

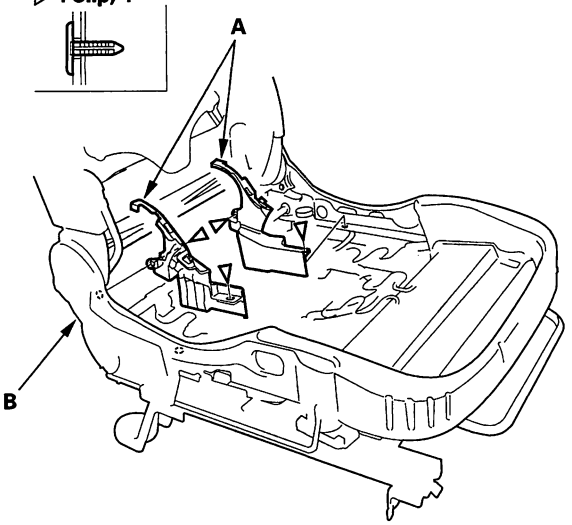


5. Remove the bolts, and release the seat cushion springs (A) from the hooks (B), then remove the seat cushion frame (C).

**Fastener Locations**

▶ : **Bolt, 4**

**8 x 1.25 mm**
**22 N·m**
**(2.2 kgf·m,**
**16 lbf·ft))**

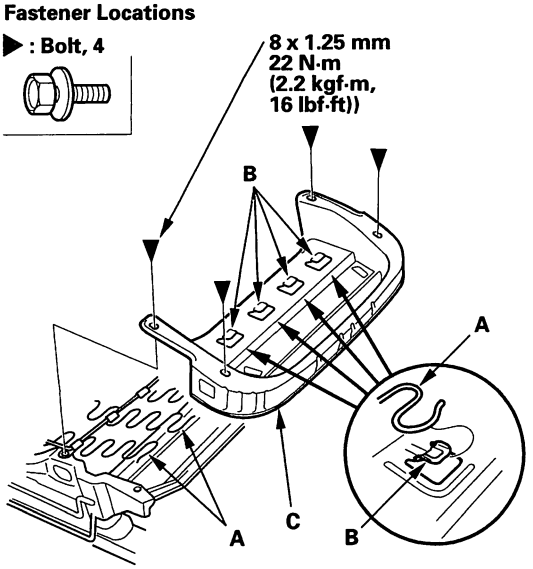


6. Remove the seat weight sensors (see page 24-165).

(cont'd)

Protected by AR



## Front Seat Frame Replacement (cont'd)

7. If necessary, remove the bushings (A, B) from the seat cushion frame (C).

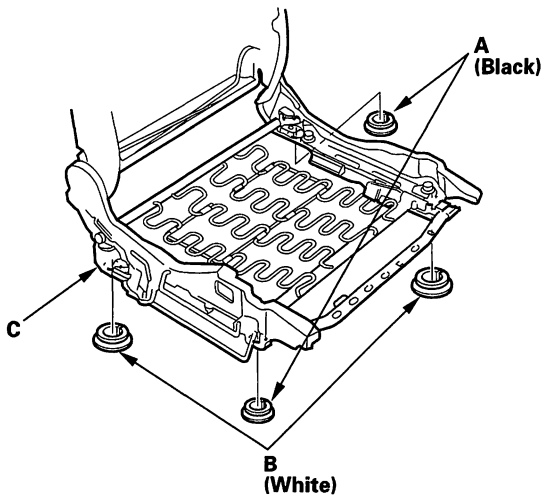


8. Install the new seat frame in the reverse order of removal, and note these items:

   - Make sure the ODS unit connector is plugged in properly.
   - Check if the clips are damaged or stress-whitened, and if necessary, replace them with new ones.
   - Push the clips into place securely.

### Driver's Seat

Check the operation of the driver's seat position sensor after any of these actions (see page 24-31):

- Driver's seat position sensor replacement
- Cover plate (front side of driver's seat slide rail) replacement

NOTE:
- Put on gloves to protect your hands.
- Apply oil to the pivot portions of the slide lock.
- Apply multipurpose grease to the sliding portions and pivot portions of the seat tracks.
- If the side airbag has deployed, replace the seat frame and related parts with new ones (see page 24-143).

1. Remove the front seat (see page 20-118).

2. Remove these items:

   - Front seat back cover/pad (see page 20-126)
   - Front seat cushion cover/pad (see page 20-131)
   - Seat position sensor (see page 24-169)
   - Front seat belt buckle (see page 24-6)

3. Remove the screw, gently pull out the center cover (A) to detach the hooks (B), and release the hook (C), then remove the cover.

**Fastener Location**

**▶ : Screw, 1**

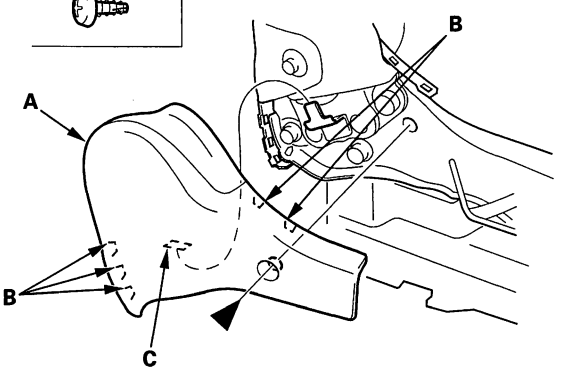




BACK

Protected by AR

4. Gently pull out the outer upper rail cover (A), then detach the clips, and release the hooks (B).

**Fastener Locations**

▶ : Clip, 2

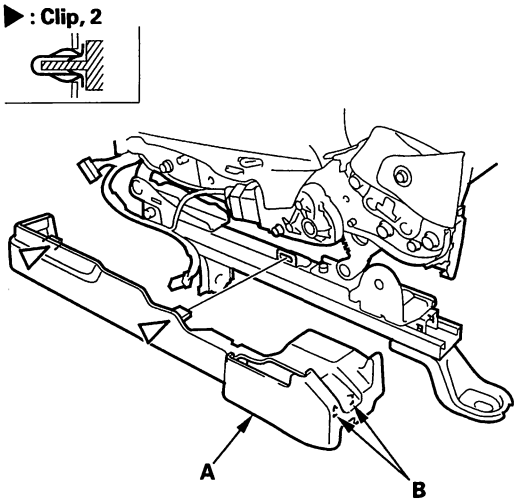


5. Gently pull out the inner upper rail cover (A) to release the hooks (B), then remove it.

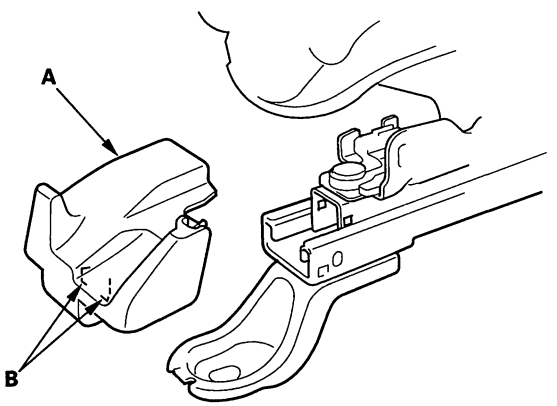


6. Remove the clips, then remove the recline inner covers (A) from the seat frame (B).

**Fastener Locations**

▷ : Clip, 2

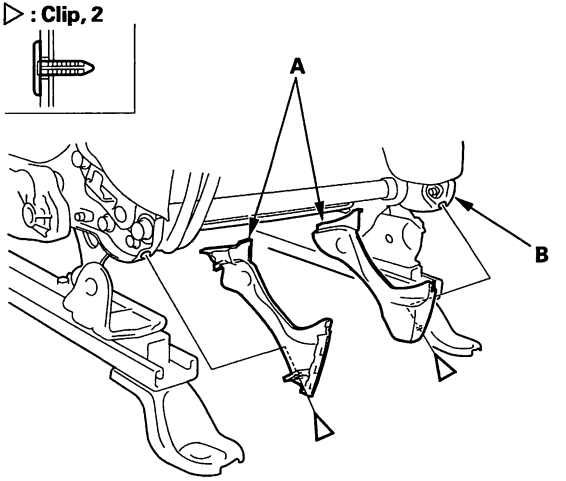


7. Separate the front seat-back flame (A) and seat cushion frame (B).

   1. Disconnect the seat wire harness connector (C).
   2. Detach the SRS wire harness connector (D) from the frame.
   3. Remove the bolts, then remove the front seat-back frame.

**Fastener Locations**

▶ : Bolt, 4

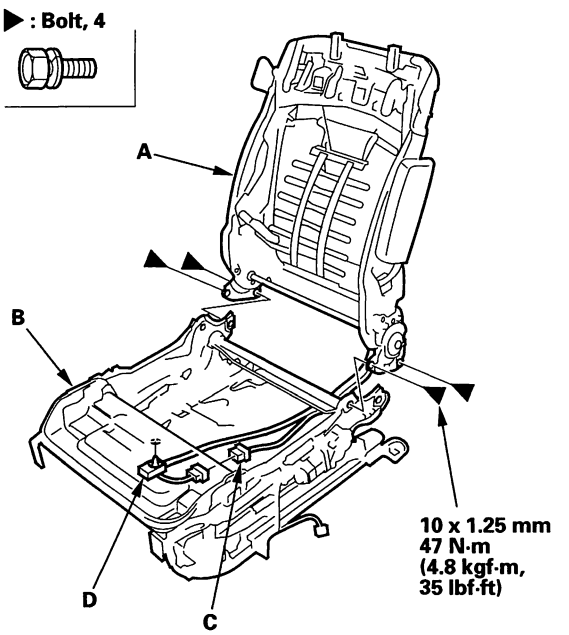


(cont'd)

Protected by AR



## Front Seat Frame Replacement (cont'd)

8. Disconnect the recline motor connector and power lumber support motor connector, then release the harness bands (A). Remove the power seat cord (B). Remove the bolt and push nut (C), then remove the connecting rod (D), rod cover (E), and recline motor (F) from the seat-back frame (G).

   NOTE:
   - Replace the push nut with new ones. Make sure the push nut is installed correctly.
   - Apply liquid thread lock to the motor mounting bolt before reinstallation.

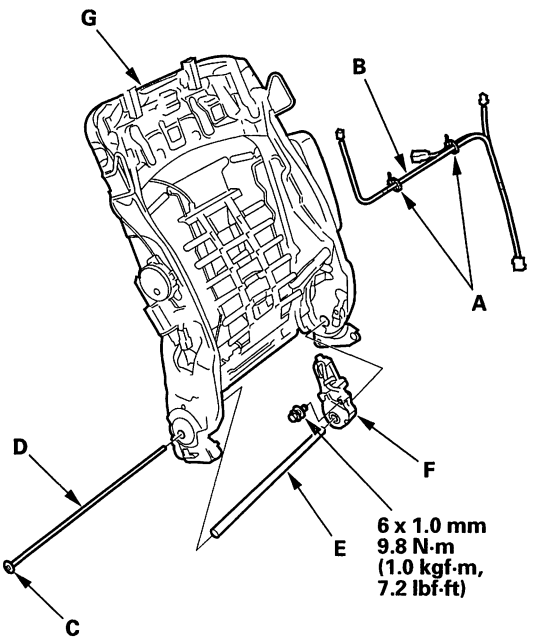


9. Remove the nuts, and remove the lumbar support motor (A). Release the upper springs (B) and lumbar springs (C) from the seat-back frame (D), then remove the front seat lumbar (E).

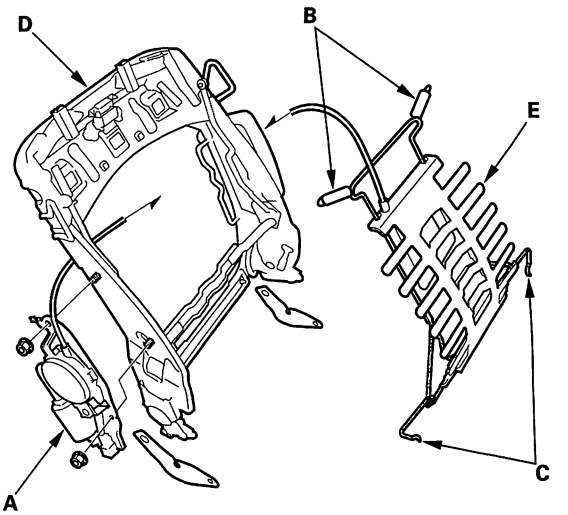




BACK

Protected by AR

10. Disconnect the harness connectors and harness band, and remove the driver's seat harness (A). Remove the rear up-down motor (B), front up-down motor (C), slide motor/left side gear box (D), right side gear box (E), seat cushion frame (F), seat position sensor (G), and harness bracket (H) from the slide/up-down adjuster (I).

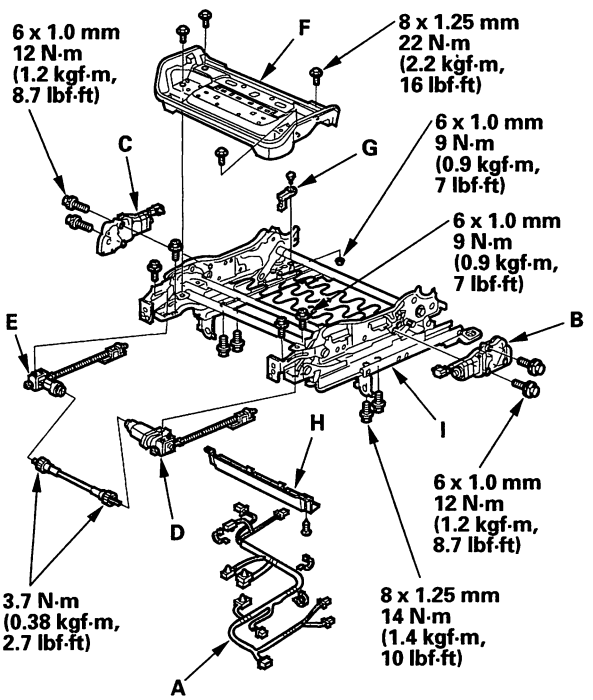


11. Install the new seat frame in the reverse order of removal, and note these items:

- Make sure seat position sensor connector is plugged in properly.
- Check if the clips are damaged or stress-whitened, and if necessary, replace them with new ones.
- Push the clips into place securely.

Protected by AR



## Front Seat-back Cover/Pad Replacement

**Special Tools Required**
KTC trim tool set SOJATP2014 *
* Available through the American Honda Tool and Equipment Program; call 888-424-6857

SRS components are located in this area. Review the SRS component locations (see page 24-12) and the precautions and procedures (see page 24-14) before doing repairs or service.

- Check the operation of the driver's seat position sensor after any of these actions (see page 24-31):
  - Driver's seat position sensor replacement
  - Cover plate (front side of driver's seat slide rail) replacement
- Calibrate the ODS unit after any of these actions (see page 24-29):
  - Front passenger's seat replacement (including any seat components)
  - Replacement of the seat weight sensors
  - After a vehicle collision

NOTE:
- Take care not to tear the seams or damage the seat covers.
- On the passenger's seat, do not touch the ODS sensor in the seat-back pad, and keep it away from oil. Oil can corrode the sensor causing it to fail.
- Put on gloves to protect your hands.

1. Remove the front seat (see page 20-118).

2. Remove the head restraint.

3. From under the seat cushion, release the hooks (A) from the seat cushion frame spring (B).

**Passenger's seat**

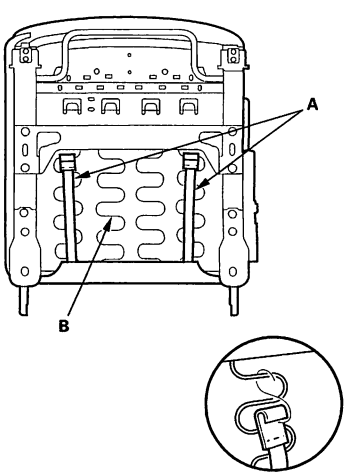


**Driver's seat**

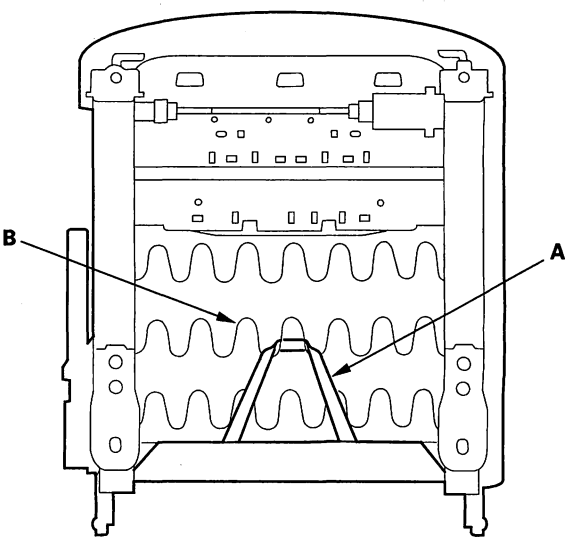


4. Detach the clips and hooks (A) by pulling the bottom of the back cover (B) back, then gently pull down the cover to release the hooks (C) from the seat frame, and remove the panel.

**Fastener Locations**
▷ : Clip, 2

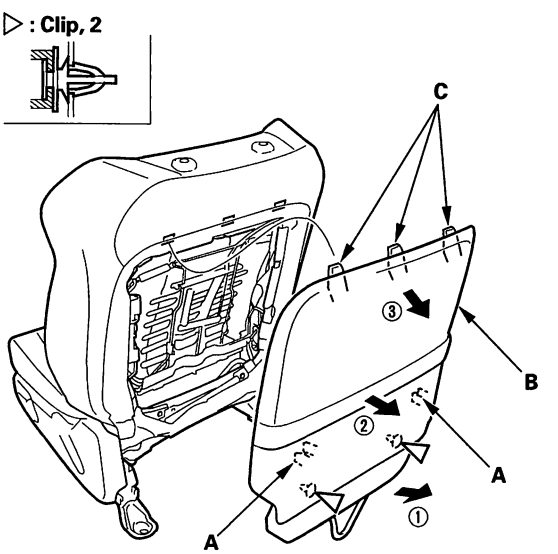




BACK

Protected by AR

5. Release the fasteners (A) of the seat cushion cover. Release the hooks (B), then pull back the seat-back cover (C).

**Passenger's seat**

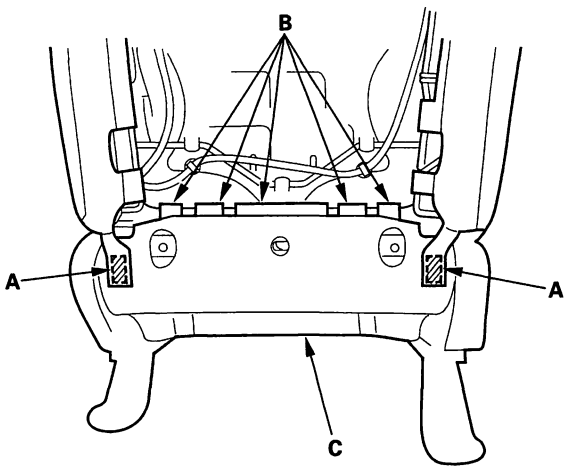


**Driver's seat**

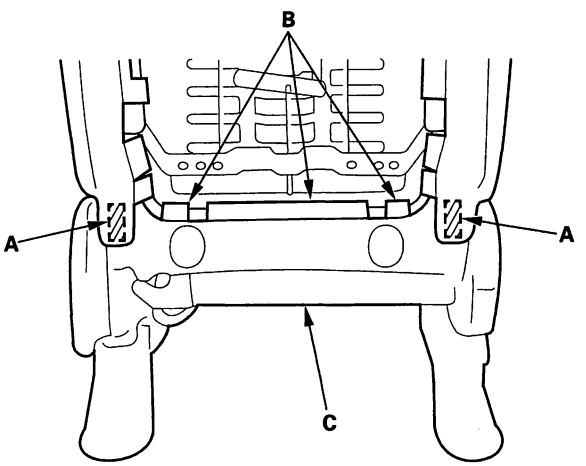


6. Release the fastener (A) of the seat-back cover (B), and pull the cover back.

**Passenger's seat**

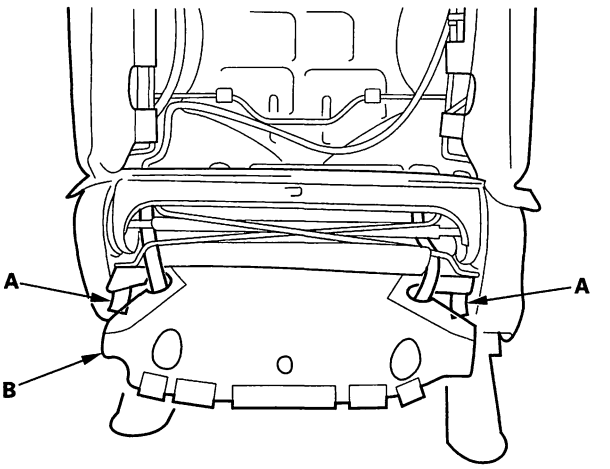


**Driver's seat**

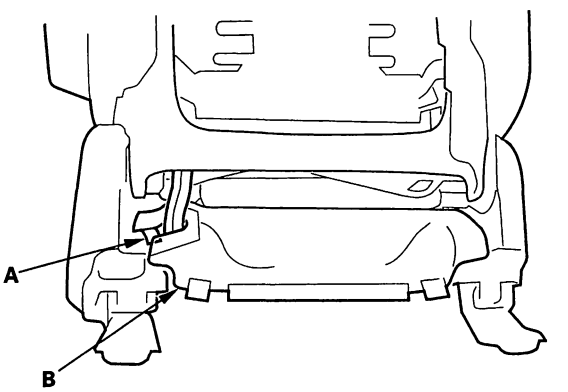


(cont'd)

Protected by AR



## Front Seat-back Cover/Pad Replacement (cont'd)

7. Driver's seat: Remove the wire tie (A) and pull the driver's seat wire harness (B), then disconnect the seat heater back connector (C).

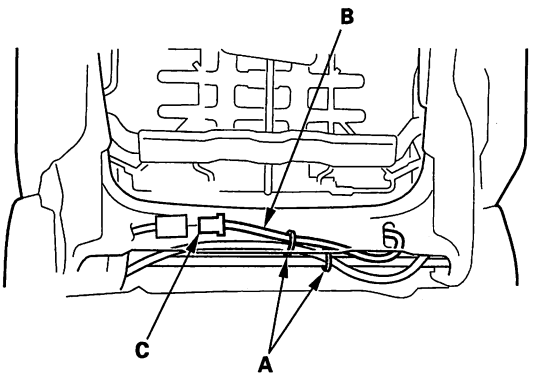


8. Release the hook strips (A), then loosen the seat-back cover (B).

**Passenger's seat**

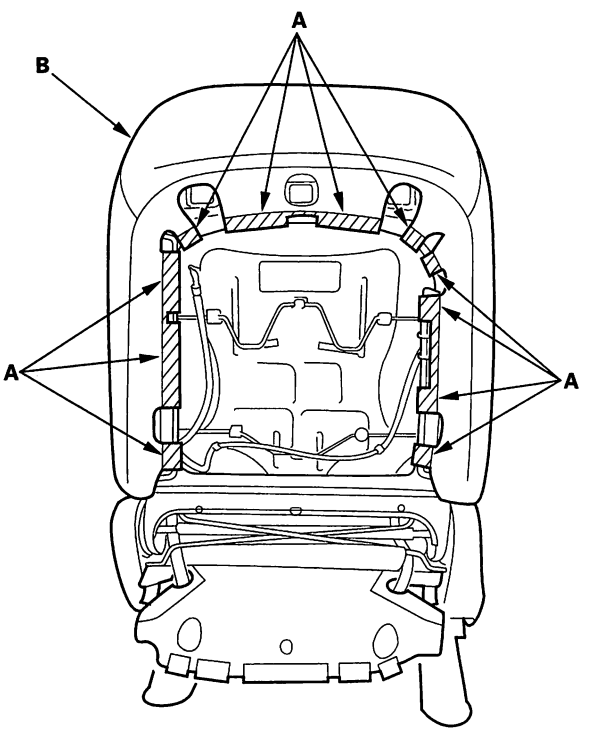


**Driver's seat**

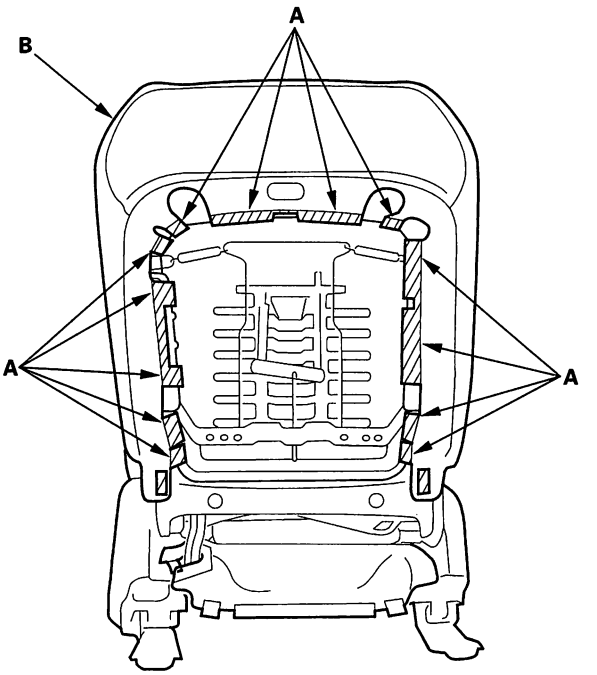


9. Release the front hook (A) and rear hook (B) of the reinforcing cloth (C) from the seat-back frame (D).

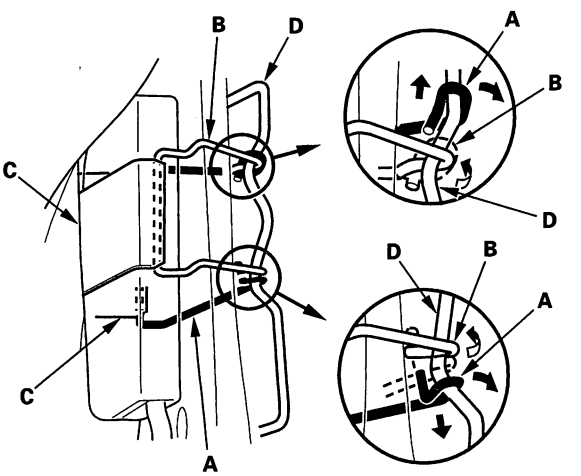




BACK

Protected by AR

10. Passenger's: Turn over the seat-back cover (A), and remove the ODS unit cover (B). Disconnect the ODS sensor connectors (C) from the ODS unit (D), and pull them in through the hole in the seat frame. Detach the harness clips (E, F).

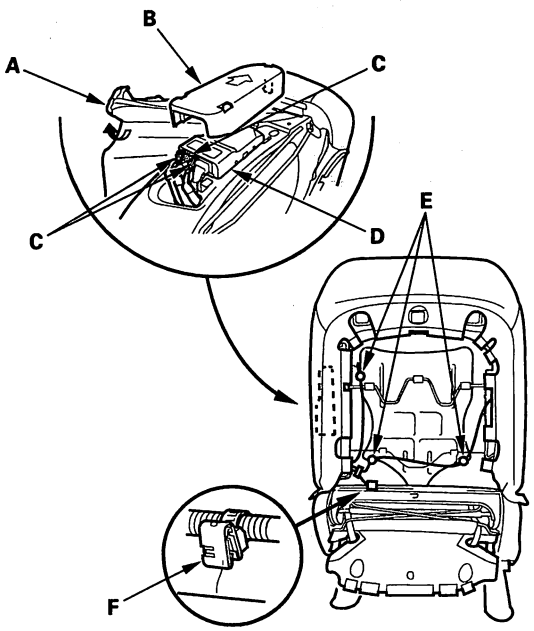


11. Pinch the tabs on the ends of the head restraint guides (A), and remove them from the seat-back.

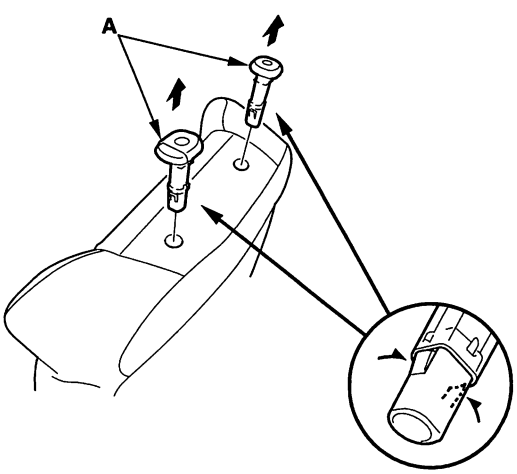


12. Remove the seat-back cover/pad (A) from the seat-back frame (B).

**Passenger's seat**

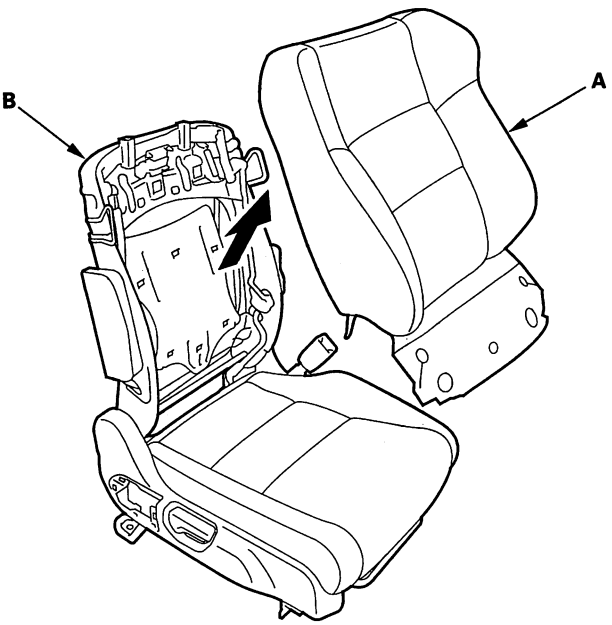


**Driver's seat**

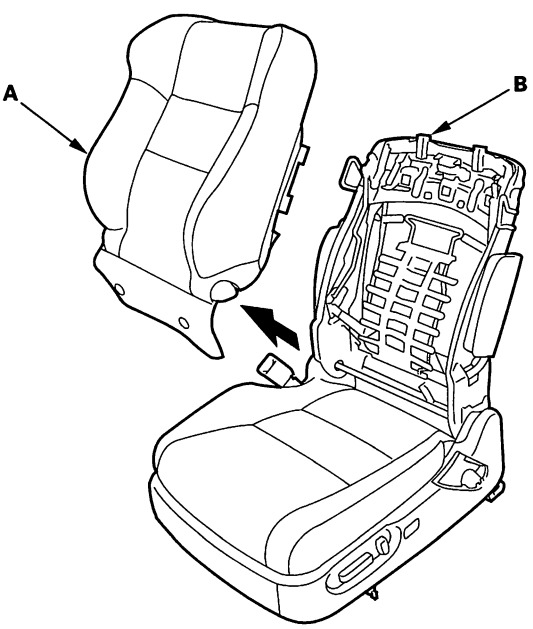


(cont'd)

Protected by AR



## Front Seat-back Cover/Pad Replacement (cont'd)

13. Pull back the edge of the seat-back cover all the way around, and release the clips (A), then remove the seat-back cover.

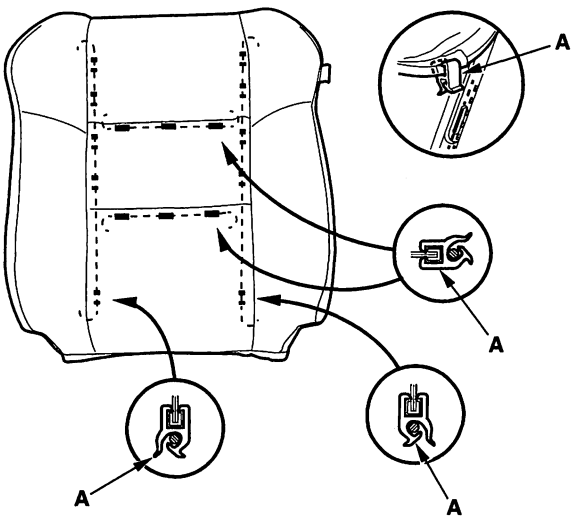


14. Install the cover in the reverse order of removal, and note these items:

- Reinitialize the ODS unit (see page 24-28).
- To prevent wrinkles when installing a seat-back cover, make sure the material is stretched evenly over the pad before securing the clips, hooks, and hook strips.
- Replace any clips you removed with new ones (A).
- Make sure the side airbag harness and ODS subharness (passenger's seat) are routed properly.

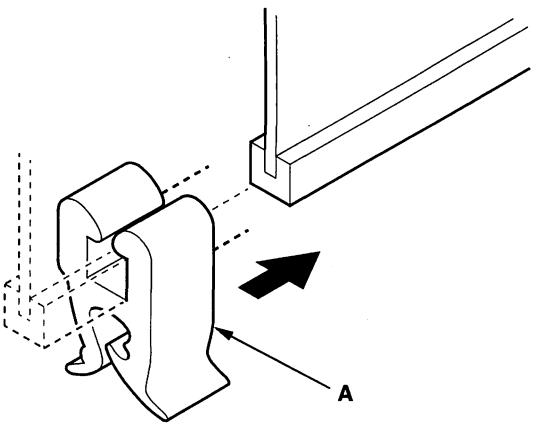




BACK

Protected by AR

# Front Seat Cushion Cover/Pad Replacement

**Special Tools Required**
KTC trim tool set SOJATP2014 *
* Available through the American Honda Tool and Equipment Program; call 888-424-6857

SRS components are located in this area. Review the SRS component locations (see page 24-12) and the precautions and procedures (see page 24-14) before doing repairs or service.

- Check the operation of the driver's seat position sensor after any of these actions (see page 24-31):
  - Driver's seat position sensor replacement
  - Cover plate (front side of driver's seat slide rail) replacement
- Calibrate the ODS unit after any of these actions (see page 24-29):
  - Front passenger's seat replacement (including any seat components)
  - Replacement of the seat weight sensors
  - After a vehicle collision

NOTE:
- Use the appropriate tool from the KTC trim tool set to avoid damage when prying components.
- Take care not to tear the seams of damage the seat covers.
- Put on gloves to protect your hands.

1. Remove the front seat (see page 20-118).

2. Driver's seat: Remove the screw and release the hooks (A) and tab (B), then remove the front cover (C).

**Fastener Location**
▶ : Screw, 1

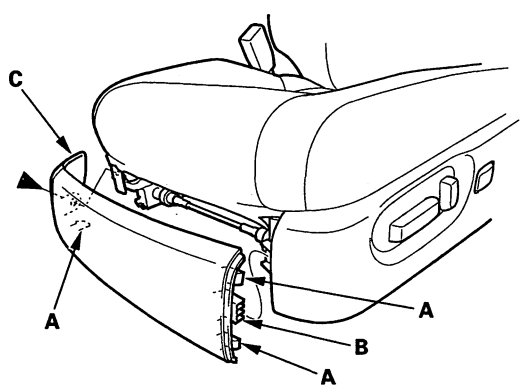


3. Driver's seat: Remove the recline cover (A).

-1 Remove the screw and detach the hooks (B).
-2 Pull up the cover, then detach the hooks (C).
-3 Disconnect the recline switch and up-down switch connector (D), lumbar support switch connector (E).

**Driver's seat**

**Fastener Location**
▶ : Screw, 1

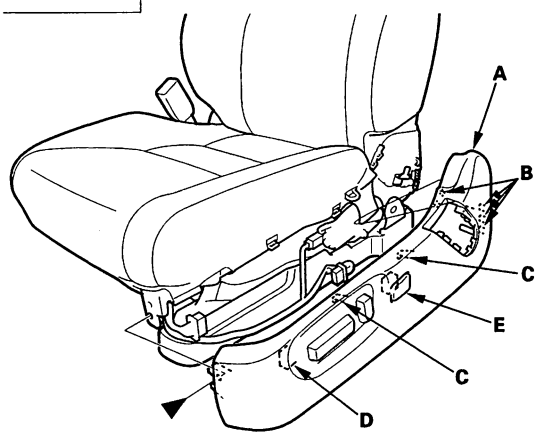


4. Passenger's seat: Remove the recline cover (A).

-1 Remove the recline knob (B) and screw (C).
-2 Gently pull out the cover, then detach the clip (D), and release the hooks (E), and remove it towards the back.

**Passenger's seat**

**Fastener Locations**
C ▶ : Screw, 1 D ▷ : Clip, 1

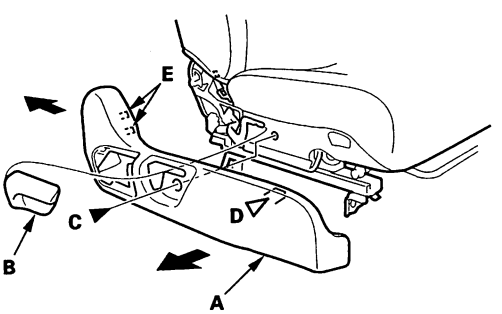


(cont'd)

Protected by AR



## Front Seat Cushion Cover/Pad Replacement (cont'd)

5. From under the seat cushion, release the hooks (A) from the seat cushion frame spring (B).

**Passenger's seat**

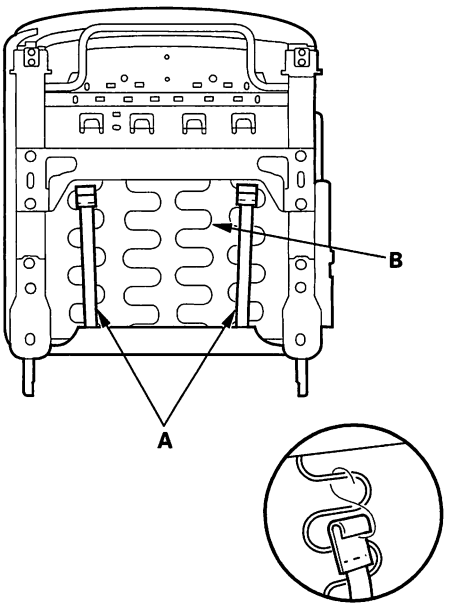


**Driver's seat**

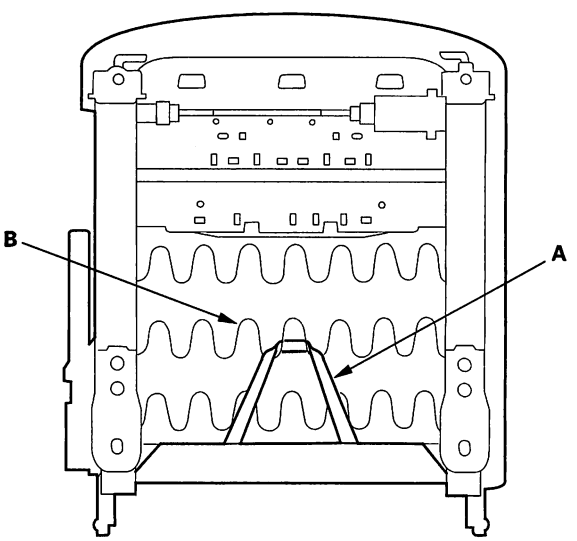


6. From the under the seat, detach the harness clip (A) and disconnect the seat cushion heater connector (B). Detach the connector clip, and pull it to outside of the seat. Release the hooks (C), then pull the seat cushion cover (D) back.

**Passenger's seat**

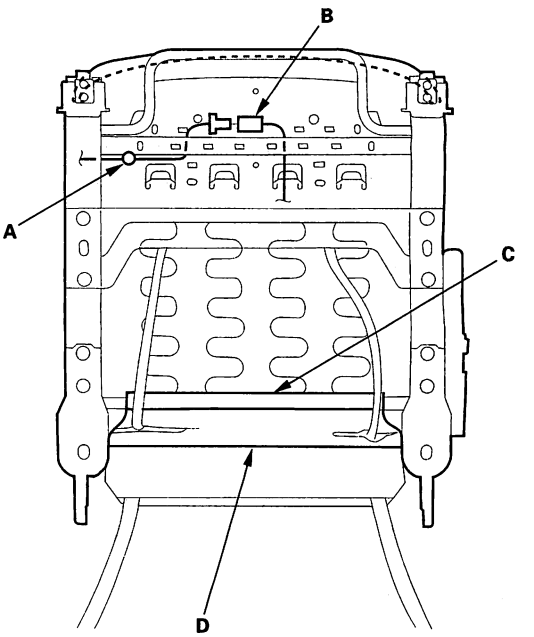


**Driver's seat**

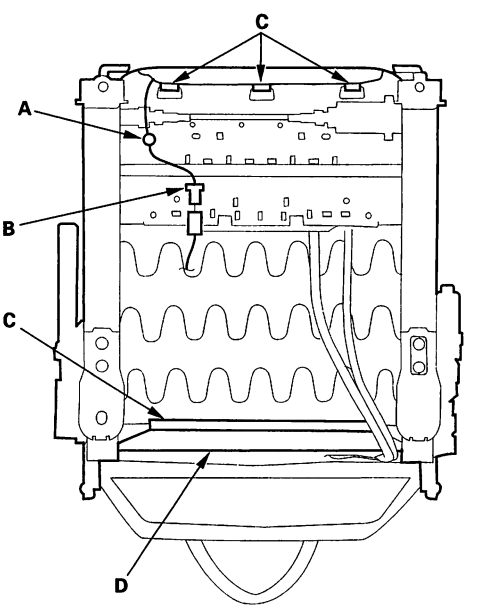




BACK

Protected by AR

7. Release the hook strips (A) from the seat frame.

**Passenger's seat**

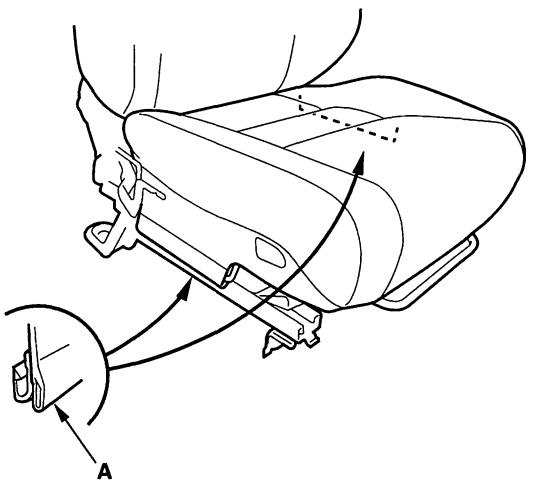


**Driver's seat**

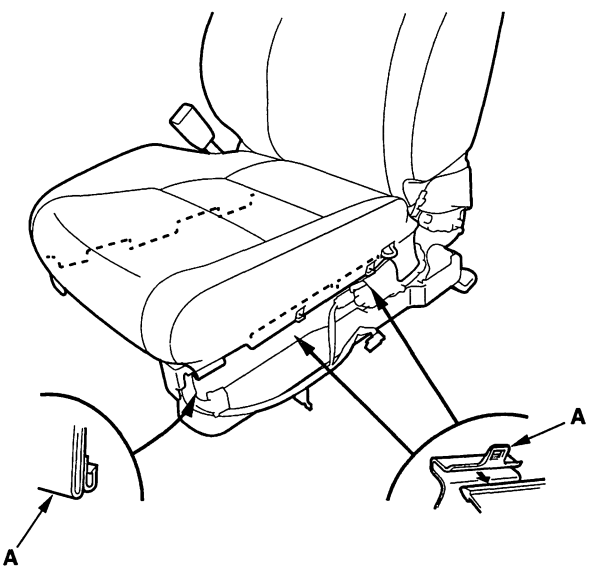


8. Remove the seat cushion/pad (A) from the seat frame (B).

**Passenger's seat**

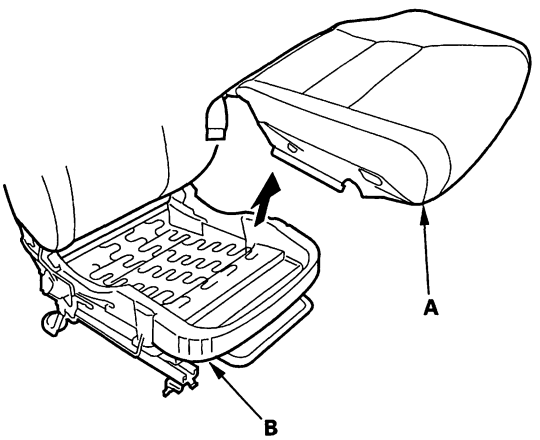


**Driver's seat**

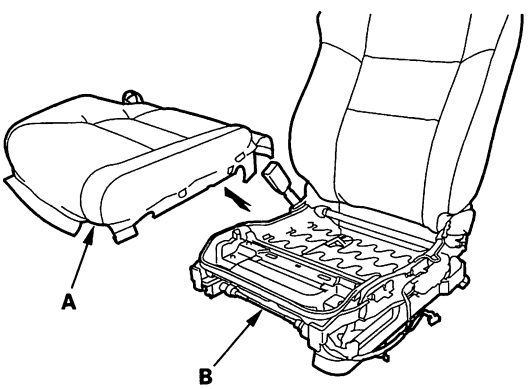


(cont'd)

Protected by AR



## Front Seat Cushion Cover/Pad Replacement (cont'd)

9. Pull back the edge of the seat-back cover all the way around, and release the clips (A), then remove the seat-back cover.

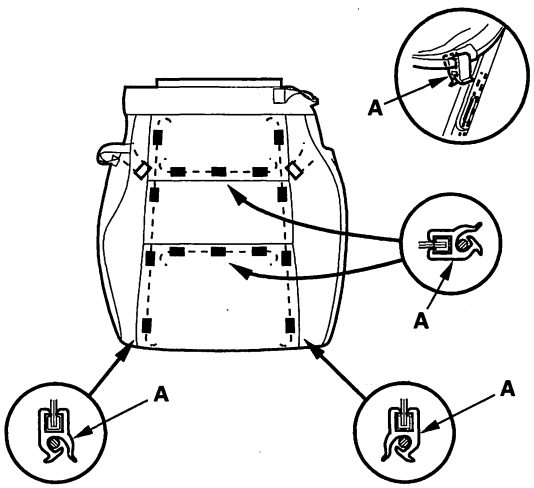


10. Install the cover in the reverse order of removal, and note these items:

    - To prevent wrinkles when installing a seat-back cover, make sure the material is stretched evenly over the pad before securing the clips, hooks, and hook strips.
    - Replace any clips you removed with new ones (A).

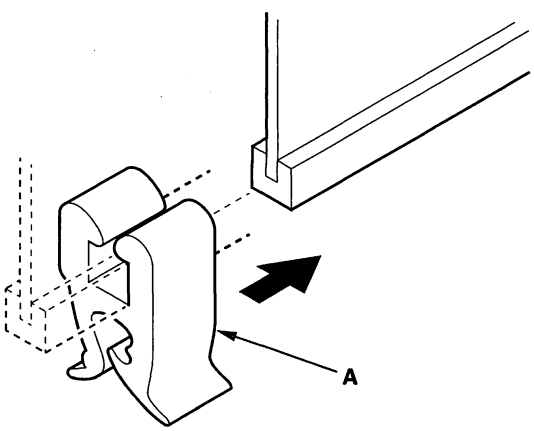




BACK

Protected by AR

## Rear Seat Armrest Replacement

NOTE: Take care not to tear the seams or damage the seat covers.

1. Gently pull forward on the top edge of the armrest center cover (A) to release the hook (B), then push forward to remove the cover.

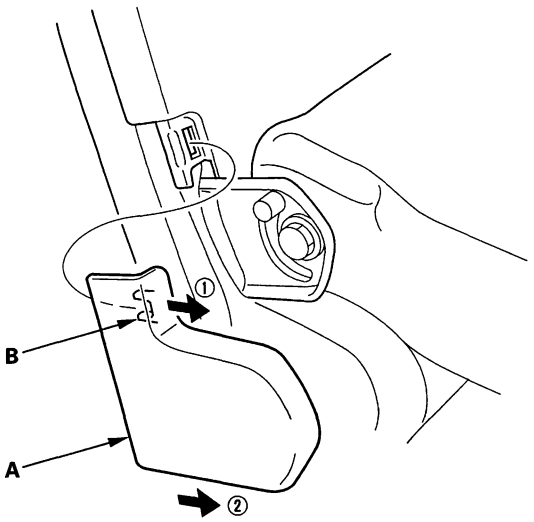


2. Remove the pivot bolt, wave washer (A), washer (B), armrest washer (C), and 6 mm bolt (D).

**Fastener Location**

**▶ : Bolt, 1**

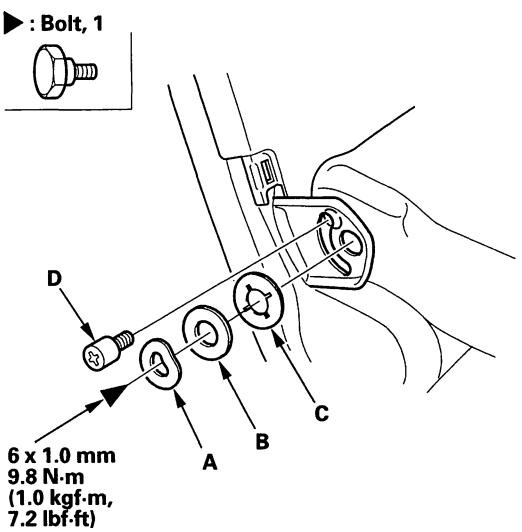


3. Slide the armrest (A) toward the driver's side of the vehicle, and remove the center pin (B) from the frame (C) by pulling back on the armrest.

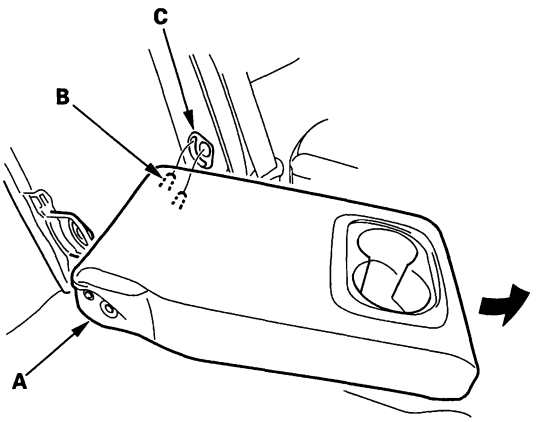


4. Install the armrest in the reverse order of removal.

BACK

Protected by AR



## Rear Seat Armrest Beverage Holder Replacement

**Special Tools Required**
KTC trim tool set SOJATP2014 *
* Available through the American Honda Tool and Equipment Program; call 888-424-6857

NOTE:
- Use the appropriate tool from the KTC trim tool set to avoid damage when prying components.
- Take care not to tear the seams or damage the seat covers.

1. Using a trim tool, push in at the ribs (A) of the rear hooks (B) to pull up the beverage holder (C), then release the hooks from the wire (D).

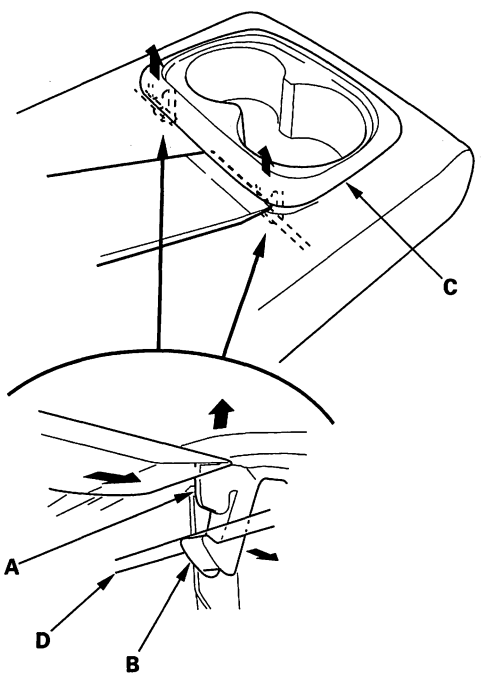


2. Release the front hooks (A) from the wire (B), then remove the beverage holder (C).

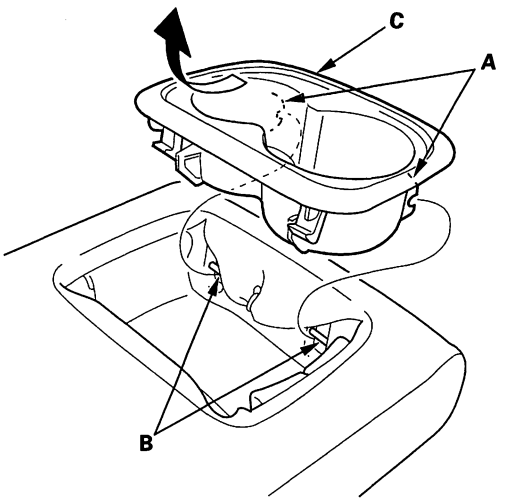


3. Install the beverage holder in the reverse order of removal. Make sure the front hooks are installed securely to the wire, then push down on the beverage holder and install the rear hooks into the wire securely.



BACK

Protected by AR

# Rear Seat Removal/Installation

## Rear Seats

NOTE:
- Put on gloves to protect your hands.
- Take care not to tear the seams or damage the seat covers.
- Have an assistant help you when removing and installing the rear seat.

1. Remove the head restraint and the center head restraint.

2. Lift the seat cushion front end, and tilt the cushion forward.

3. Remove the rear cushion link ends (A) from the link bracket. With the help of an assistant, remove the left rear cushion (B) and right rear cushion (C) through both the rear door openings.

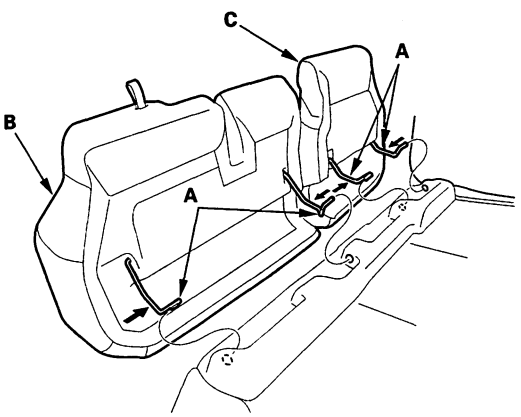


4. Remove the rear center seat belt lower anchor bolt (A) and rear seat bolt securing the rear seat.

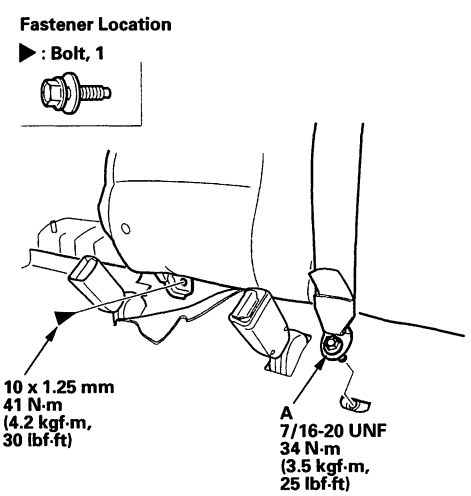


5. Fold the seat back forward.

6. Remove the cargo area lid (see page 20-79).

7. Remove the nuts securing the rear seat.

**Left rear seat**

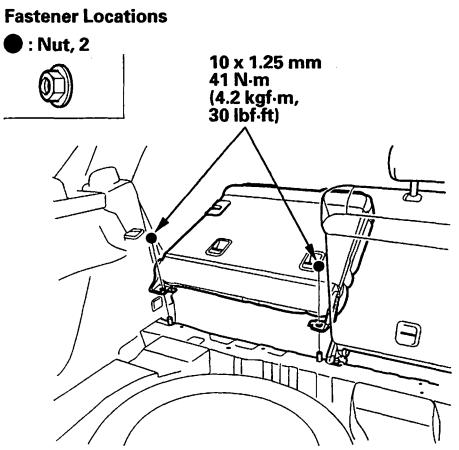


**Right rear seat**

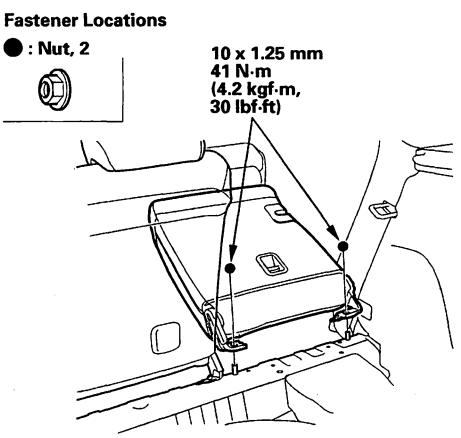


8. With the help of an assistant, remove the left rear seat and right rear seat through both the rear door openings.

9. Install the seat in the reverse order of removal, and note these items:

   - Before installing the anchor belt, make sure there are no twists or kinks in the center seat belt.
   - Tighten the seat bolt and nuts to the specified torque.

(cont'd)

Protected by AR



## Rear Seat Removal/Installation (cont'd)

### Seat Side Bolster

NOTE: Take care not to scratch the body or tear the seat covers.

1. Fold the seat back forward.
2. Remove the rear door sill trim (see page 20-68).
3. Remove the seat side bolster mounting bolt.
4. Pull the seat belt (A) out through the slit (B) in the seat belt guide (C).

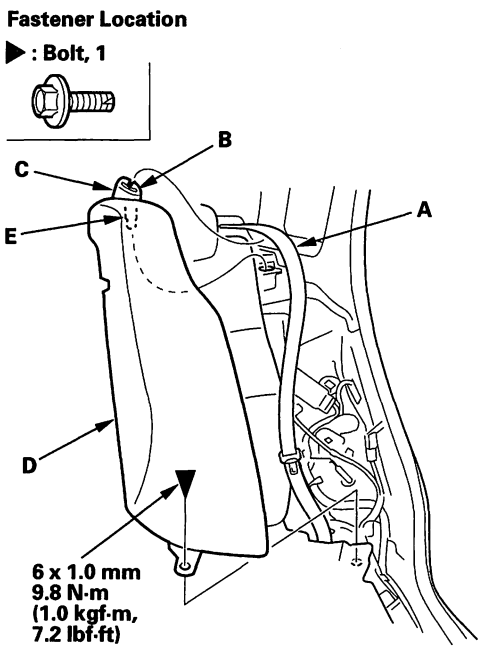


5. Lift the seat side bolster (D) up to release the hook (E), then remove the seat side bolster.
6. Install the seat in the reverse order of removal, and note these items:
   - Before attaching the seat side bolster, make sure there are no twists or kinks in the seat belt.
   - Guide the belt over the front of the seat side bolster as you install the holder.

## Rear Seat Cushion Link End Mounting Bracket Replacement

1. Remove the rear seat cushion.
2. Lift up carpet and remove the mounting bolts, then remove the rear seat cushion link end mounting bracket (A).

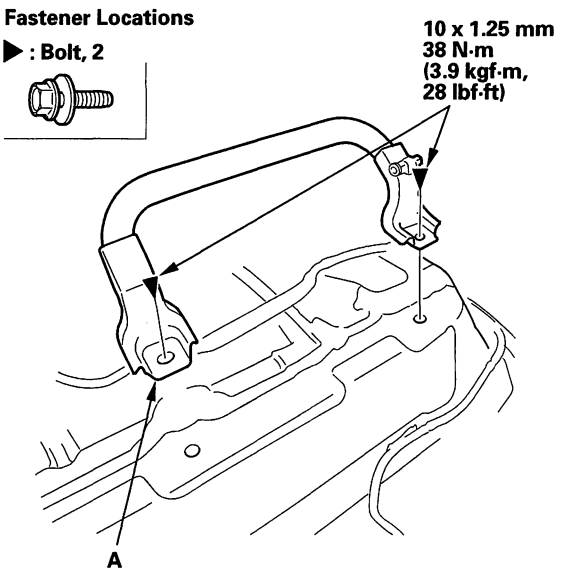


3. Install the bracket in the reverse order of removal.



BACK

Protected by AR

## Rear Seat-back Striker Replacement

NOTE: Take care not to scratch the inner trim.

1. Remove the cargo area side trim panel (see page 20-76).

2. Remove the bolts, then remove the seat-back strikers (A).

**Driver's side**

**Fastener Locations**

**▶ : Bolt, 3**

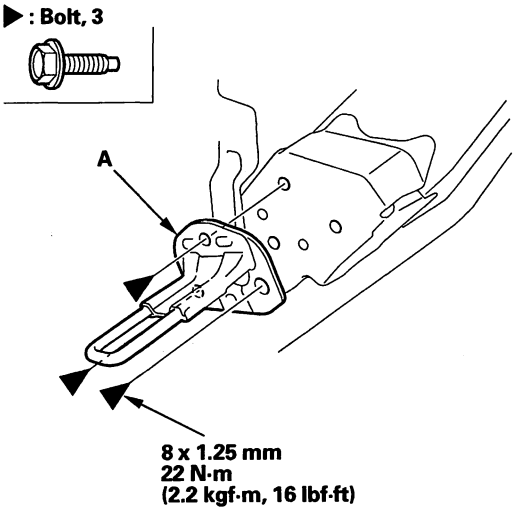


**Passenger's side**

**Fastener Locations**

**▶ : Bolt, 2**

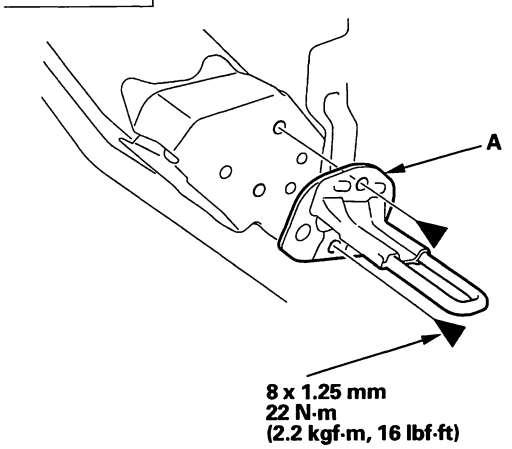


3. Install the striker in the reverse order of removal.

## Rear Seat-back Cover/Pad Replacement

NOTE:
- Put on gloves to protect your hands.
- Take care not to tear the seams or damage the seat covers.

1. Remove the rear seat (see page 20-137).

2. Remove the rear seat armrest (see page 20-135).

3. Remove the pivot bracket (A).

   -1 Using a T40 TORX bit, remove the pivot bolt (B).
   -2 Remove the pivot cover (C) and pivot bracket. If necessary, remove the bushing (D) and pivot washer (E).

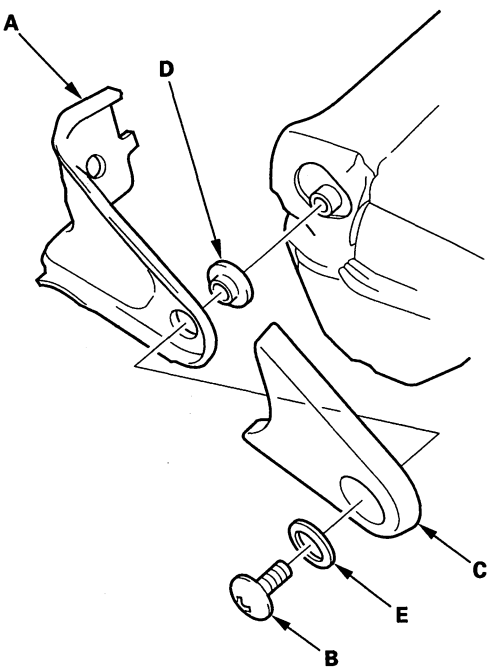

Use a T40 TORX bit.

4. Install the bracket in the reverse order of removal, and note these items:

   - Apply multipurpose grease to the moving portions of the bushing.
   - Replace any damage or stress-whitened bushing and pivot washer with new one.

(cont'd)

Protected by AR



## Rear Seat-back Cover/Pad Replacement (cont'd)

5. Remove the clips (A), and detach the clips (B), then remove the striker hole cover (C).

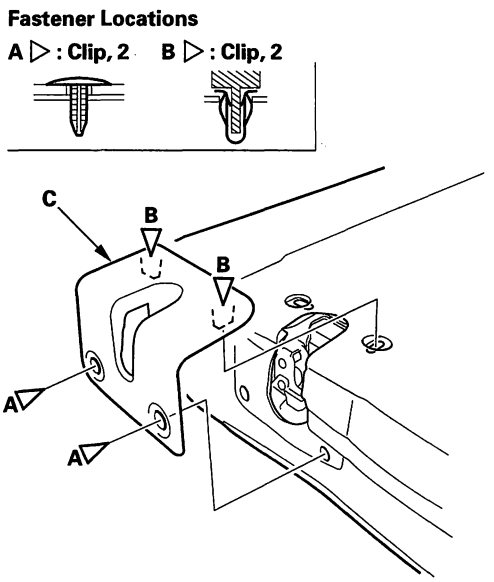


6. Release the hooks (A), then remove the tether anchor cover (B).

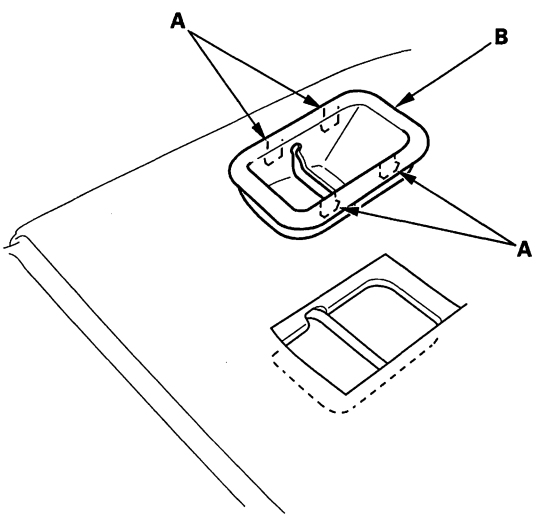


7. Pull out the cap (A), and remove the screw.

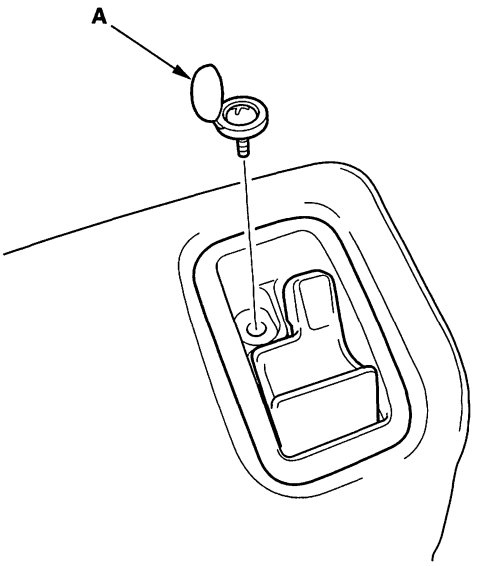


8. Pull up the rear edge of the lock knob trim (A) to release, and remove trim from the hole in the seat-back.

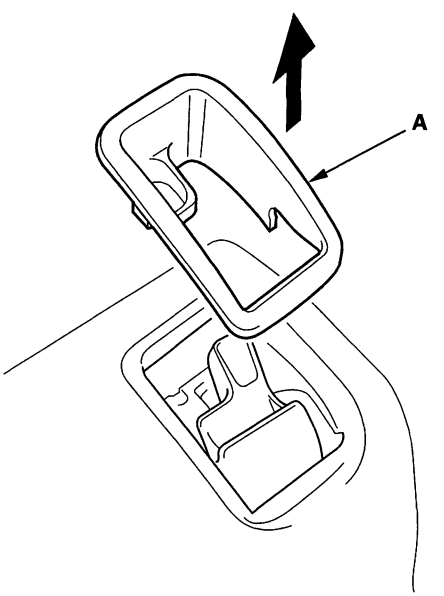




BACK

Protected by AR

9. Remove the screws, and release the hooks (A), then remove the seat belt hole cover (B). Slip the rear center seat belt out through the slit (C) in the seat belt hole cover.

**Fastener Locations**

**▶ : Screw, 2**

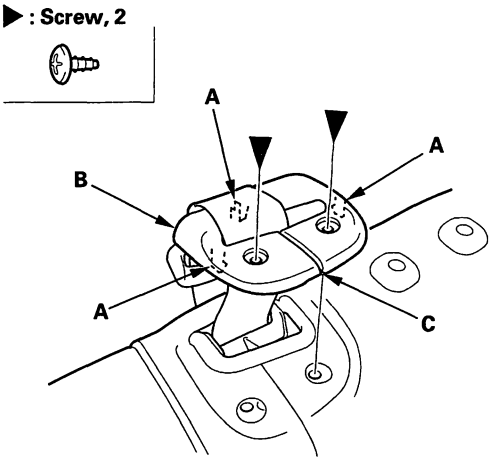


10. Pull out the armrest cover (A) to release the upper edge of the cover, and detach the clip. Pull out the armrest cover to release the hooks (B) from the seat-back frame wire (C) and the hook (D).

**Fastener Location**

**▷ : Clip, 1**

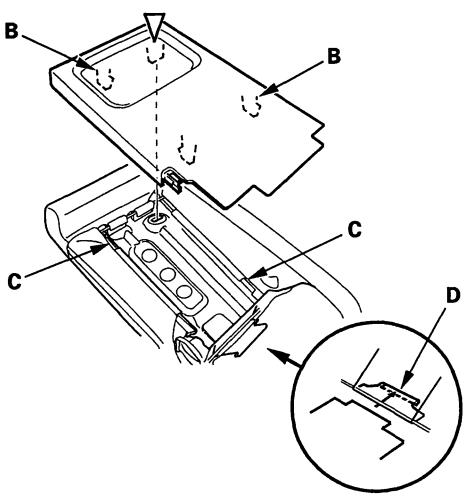


11. From behind the seat-back, release the hook (A), and unzip the seat-back cover (B). Pull back the seat-back cover.

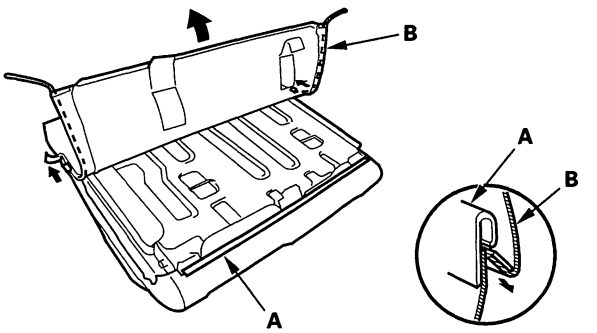


12. Release the clips.

**Fastener Locations**

**▷ : Clip, 8**

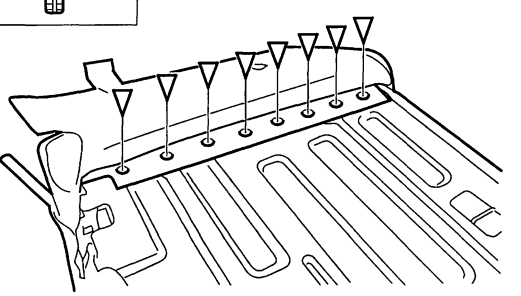

(cont'd)

Protected by AR



## Rear Seat-back Cover/Pad Replacement (cont'd)

13. Release the hooks (A) from the seat-back frame wire (B).

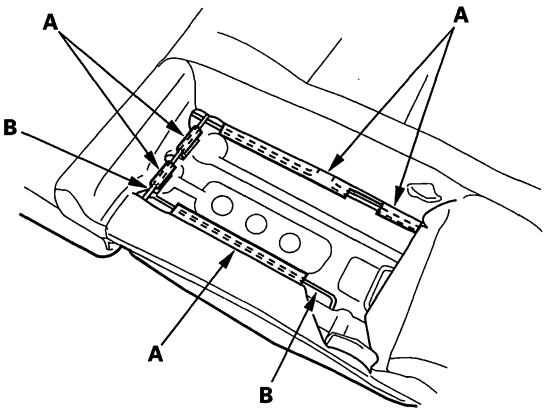


14. Pull out the head restraint guides (A) and center headrest guides (B) while pinching the tabs on the ends of the guides, and remove them.

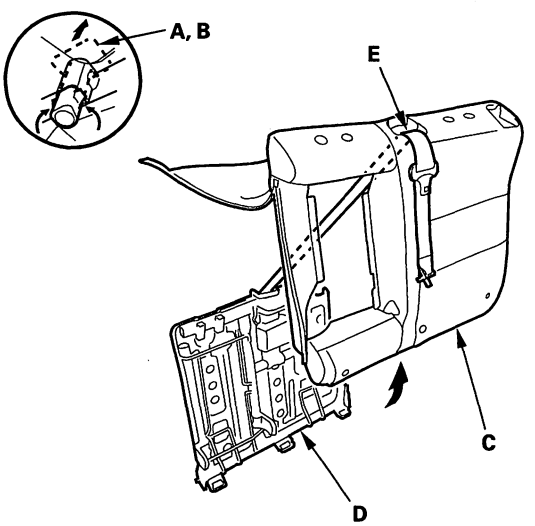


15. Remove the seat-back cover/pad (C) from the seat-back frame (D), and pass the center seat belt (E) out through a hole in the seat-back cover/pad.

16. Pull back the edge of the seat cushion cover all the way around, and release the clips (A) and plastic plate (B), then remove the seat cushion cover (C).

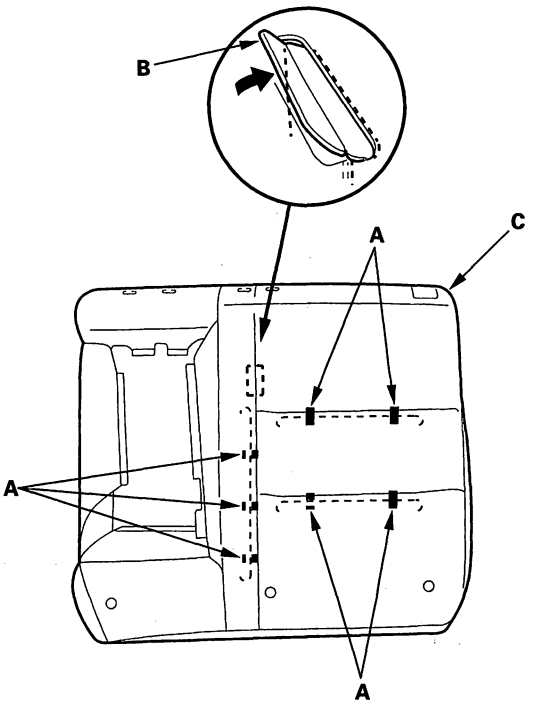


17. Install the cover in the reverse order of removal, and note these items:

- To prevent wrinkles when installing a seat cushion cover, make sure the material is stretched evenly over the pad before securing the clips.
- Replace any clips (A) you removed with new ones. Install them with commercially available upholstery ring pliers (B).

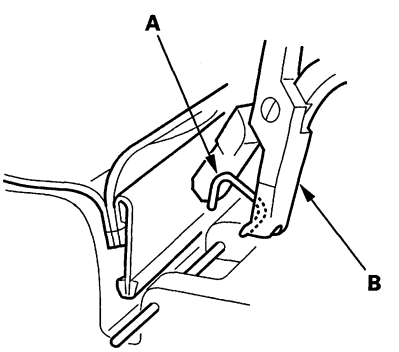




BACK

Protected by AR

## Rear Seat Lock Replacement

NOTE:
- Put on gloves to protect your hands.
- Take care not to tear the seams or damage the seat covers.

1. Remove the rear seat (see page 20-137).
2. Remove the seat-back cover/pad (see page 20-139).
3. Remove the bolts securing the rear seat lock (A).

**Fastener Locations**

**▶ : Bolt, 2**

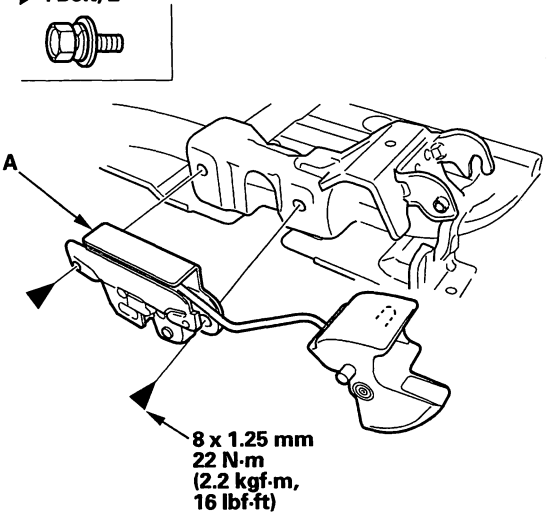


4. Install the bracket in the reverse order of removal, and make sure the rear seat locks and unlocks properly.

## Rear Seat Side Bolster Cover Replacement

NOTE: Take care not to tear the seams or damage the seat covers.

1. Remove the side seat bolster (see page 20-138).
2. Remove the screws (A).
3. Pull out the seat belt guide (B) to detach the clip (C), and remove the rear back side plate (D).

**Fastener Locations**

**A ▶ : Screw, 2  C ▷ : Clip, 1**

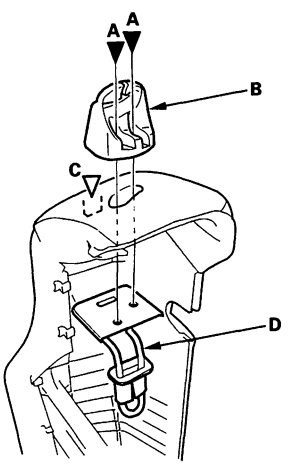


4. Release the all the hook strips (A), and fold back the seat side bolster cover (B), and release the cover from the hooks (C).

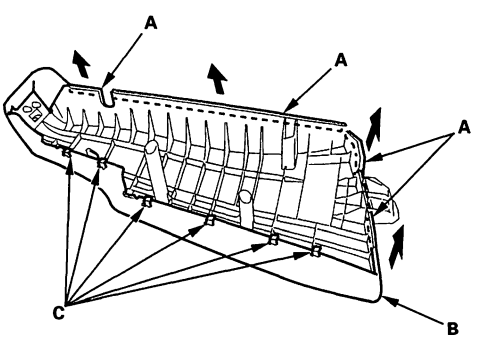


5. Install the cover in the reverse order of removal. To prevent wrinkles when installing a side bolster cover, make sure the material is stretched evenly over the pad before securing the hook strips and staples.

Protected by AR



## Rear Seat Cushion Cover/Pad Replacement

NOTE:
- Put on gloves to protect your hands.
- Take care not to tear the seams or damage the seat covers.
- The left seat cushion is shown; the right seat cushion is similar.

1. Remove the rear seat cushions (see step 3 on page 20-137).

2. Release the hook strips (A) of the seat cushion cover (B) from the seat cushion frame wire.

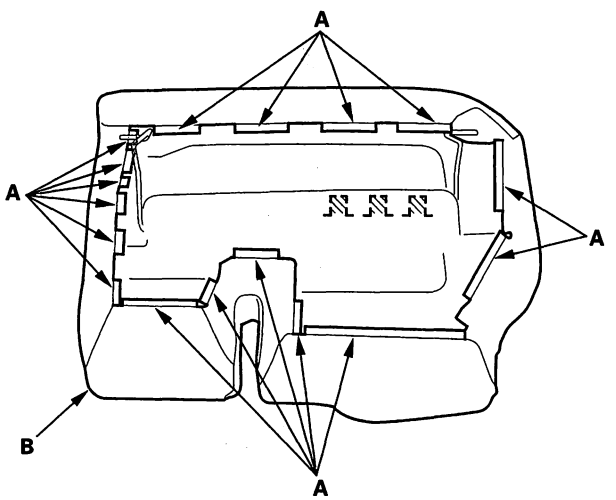


3. Pull out the seat cushion frame (A) and cushion undercover (B) from the seat cushion cover/pad (C) to separate them.

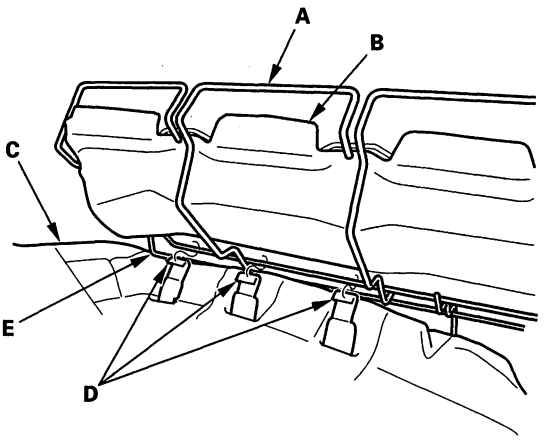


4. Release the hook strips (D) from the frame wire (E).

5. Remove the under cover (A) from the frame (B). Take care not to damage the cover.

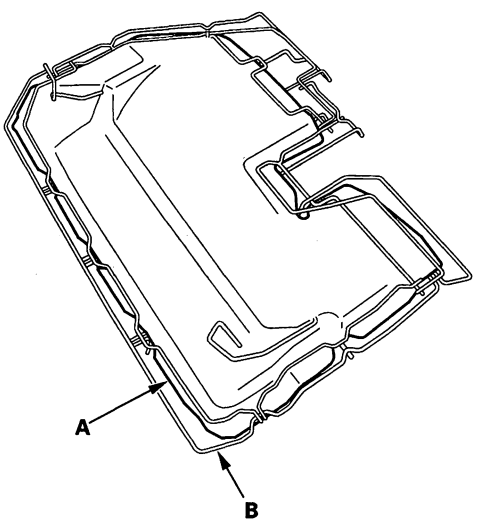




BACK

Protected by AR

6. Pull back the edge of the seat cushion cover (A) all the way around, and release the clips (B), then remove the seat cushion cover.

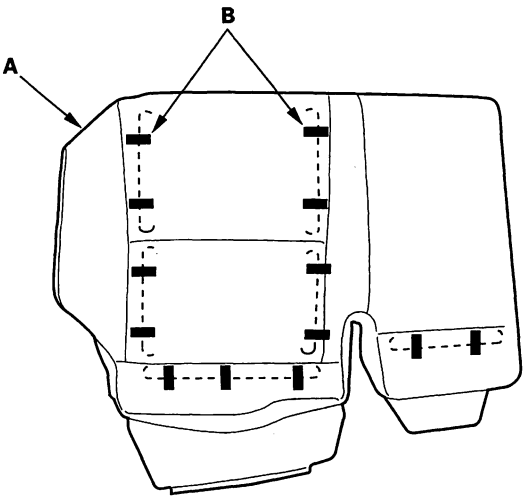


7. Install the cover in the reverse order of removal, and note these items:

   - To prevent wrinkles when installing a seat cushion cover, make sure the material is stretched evenly over the pad before securing the clips and hook strips.
   - Replace any clips (A) you removed with new ones. Install them with commercially available upholstery ring pliers (B).

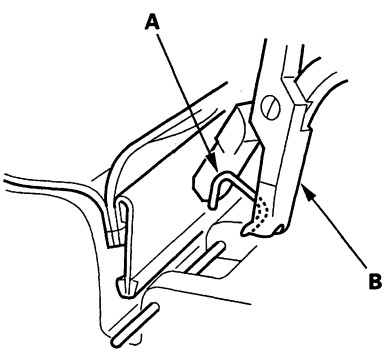

Protected by AR



## Front Bumper Removal/Installation

NOTE:
- Have an assistant help you when removing and installing the front bumper.
- Take care not to scratch the front bumper and body.
- Put on gloves to protect your hands.

1. Remove the screws (A, B), and clips (C, D) securing the front bumper (E).

   NOTE: To remove the clips, pry the inner clip up at the edge near the line (F) on its head.

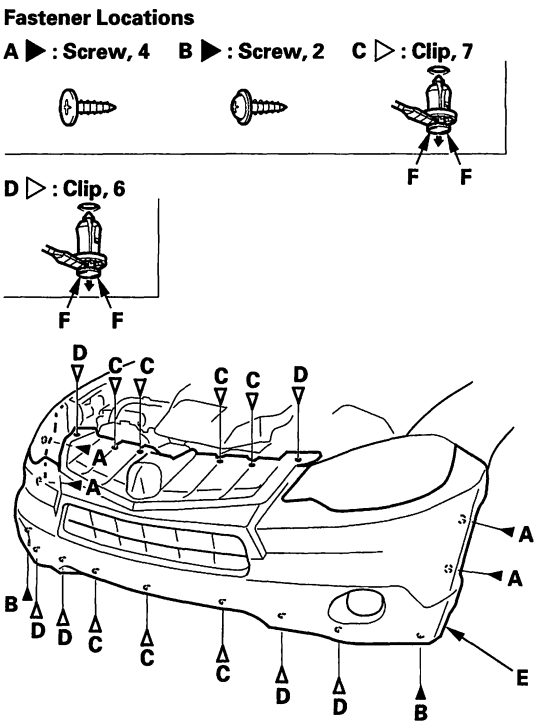


2. Pull on the front bumper (A) at the wheel arch areas to release it from the hooks (B) on the side spacers (C).

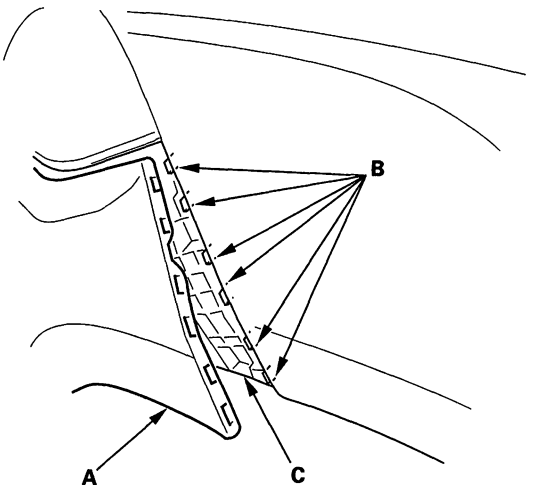


3. With the help of an assistant, while pulling the wheel arch portion away from the side spacer (A), pull the front bumper to release the bumper from the hooks (B) on the corner upper beam (C).

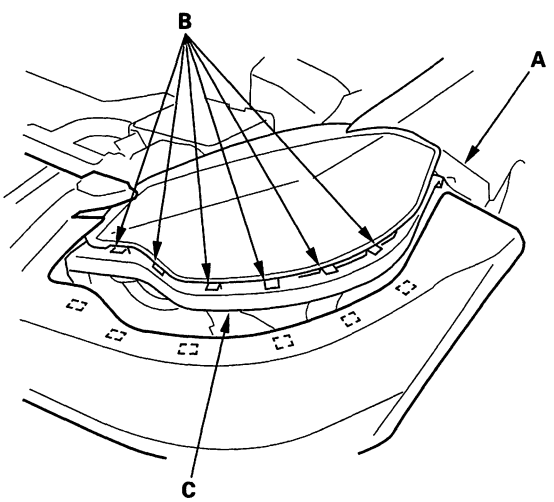




BACK

Protected by AR

4. With the help of an assistant, disconnect the front fog light connectors (A), then remove the front bumper (B).

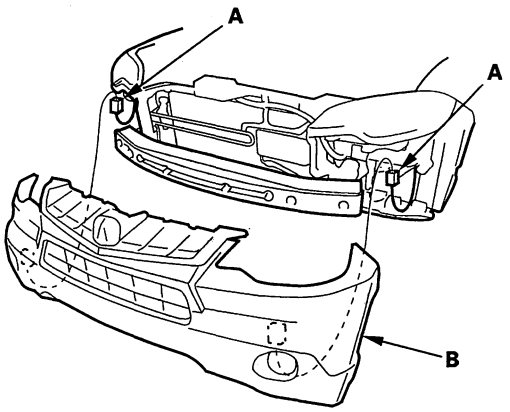


5. Remove the front bumper absorber (A) from the front bumper beam (B).

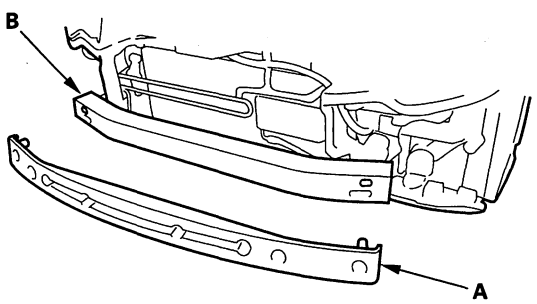


6. Install the bumper in the reverse order of removal, and note these items:

- Make sure the front fog light connectors are plugged in properly.
- Make sure the front bumper engages the hooks (of both corner upper beams and side spacers) on each side securely.
- Push the clips and hooks into place securely.
- Check if the clips are damaged or stress-whitened, and if necessary, replace them with new ones.

Protected by AR



## Front Bumper Disassembly/Reassembly

NOTE: Take care not to scratch the bumper faces.

1. Remove the front bumper (see page 20-148).

2. Remove the screws (A) and the front fog lights, then remove the bolts (B) and clips (C) securing the front bumper upper face (D) and the front bumper lower face (E).

**Fastener Locations**

**A ▶ : Screw, 6 B ▶ : Bolt, 2 C ▷ : Clip, 2**

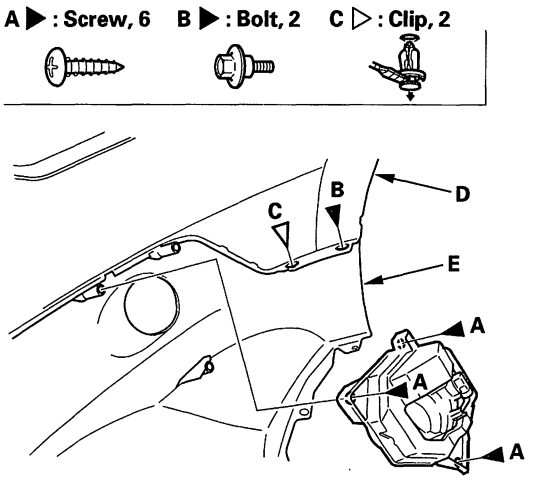


3. With the help of an assistant, detach the hooks (A) and separate the front bumper upper face from the front bumper lower face.

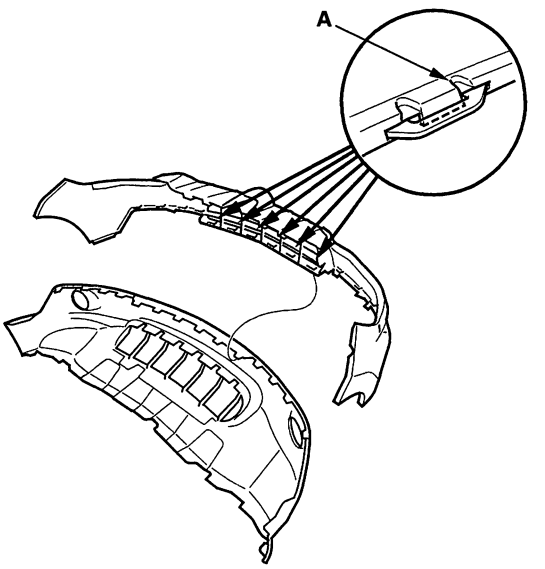


4. Reassemble the bumper faces in the reverse order of removal.



BACK

Protected by AR

## Upper Front Bumper Grille Replacement

NOTE:
- Take care not to scratch the front bumper.
- Put on gloves to protect your hands.

1. Remove the front bumper (see page 20-148).

2. Release the hooks (A) from the front bumper upper face (B), then remove the upper front bumper grille (C).

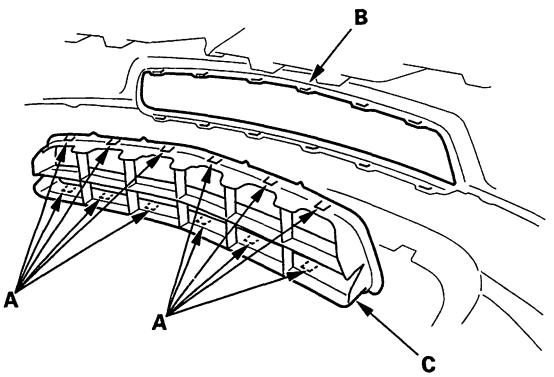


3. Install the upper front bumper grille in the reverse order of removal. Push the hooks into place securely.

## Lower Front Bumper Grille Replacement

NOTE:
- Take care not to scratch the front bumper.
- Put on gloves to protect your hands.

1. Remove the front bumper (see page 20-148).

2. Release the hooks (A) from the front bumper lower face (B), then remove the lower front bumper grille (C).

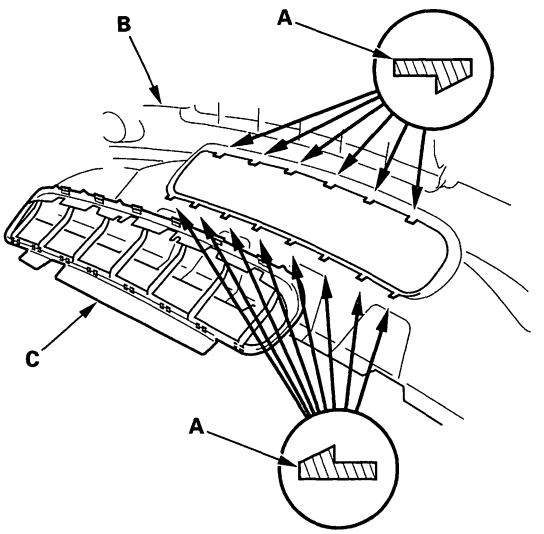


3. Install the lower front bumper grille in the reverse order of removal. Push the hooks into place securely.

Protected by AR



## Rear Bumper Removal/Installation

NOTE:
- Have an assistant help you when removing and installing the rear bumper.
- Take care not to scratch the rear bumper and body.
- Put on gloves to protect your hands.

1. Remove the caps (A). Then remove the bolts (B), screws (C) and clips (D) securing the rear bumper (E).

**Fastener Locations**

**B ▶ : Bolt, 4  C ▶ : Screw, 4  D ▷ : Clip, 4**

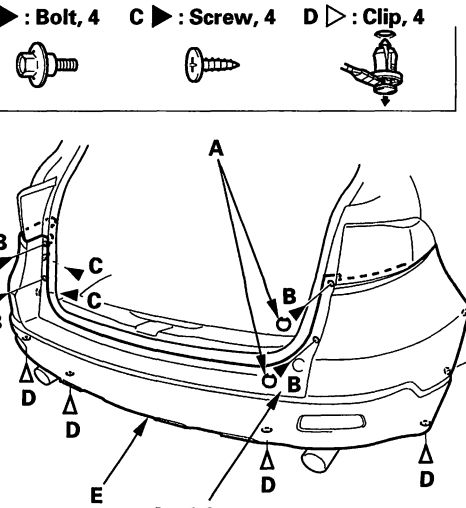


**6 x 1.0 mm**
**9.8 N·m (1.0 kgf·m, 7.2 lbf·ft)**

2. Pull on the rear bumper (A) at the wheel arch areas to release it from the hooks (B) on the side spacers (C).

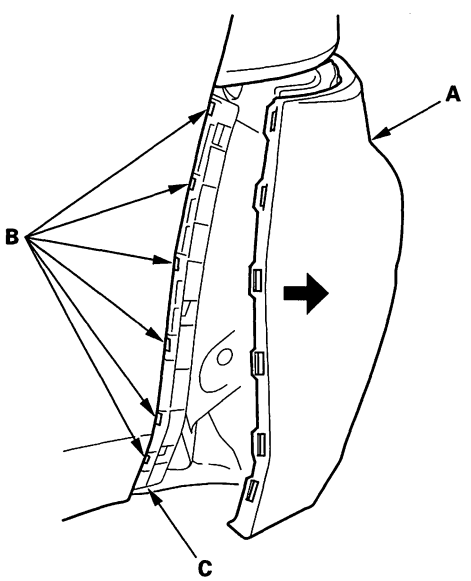


3. With the help of an assistant while pulling the wheel arch portion away from the side spacer (A), pull the rear bumper to release the bumper from the hooks (B) on the side bracket (C).

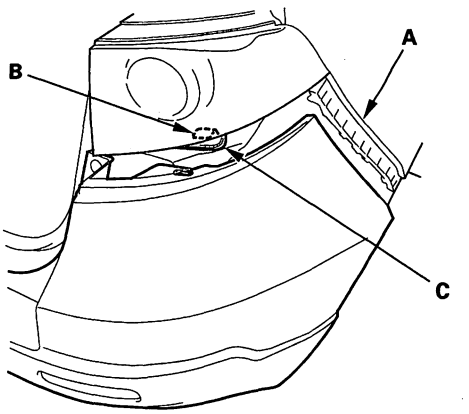


4. With the help of an assistant, pull the rear bumper to release the bumper (A) from the hooks (B) on the upper bracket (C).

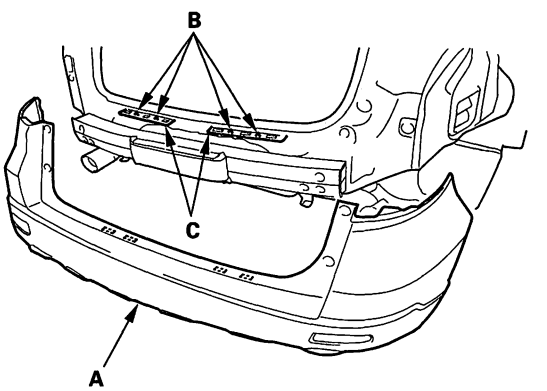




BACK

Protected by AR

5. Remove the hooks (A), then remove the rear bumper absorber (B) from the rear bumper beam (C).

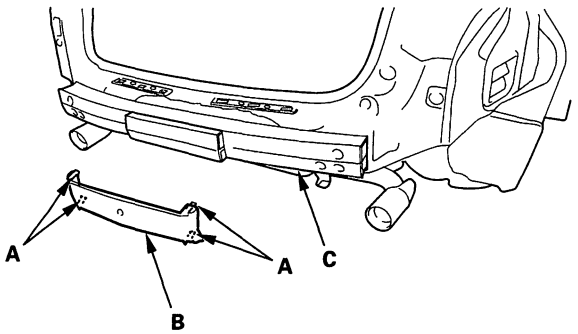


6. Install the bumper in the reverse order of removal, and note these items:

- Make sure the rear bumper engages the hooks (of both the side bracket and side spacers) on each side securely.
- Check if the clips are damaged or stress-whitened, and if necessary, replace them with new ones.
- Push the clips and hooks into place securely.

Protected by AR



## Rear Bumper Reflector Replacement

NOTE:
- Take care not to scratch the rear bumper and body.
- Put on gloves to prevent damage.

1. Remove the rear bumper (see page 20-150).

2. Push out the clip (A), release the hook (B), then remove the rear bumper reflector (C).

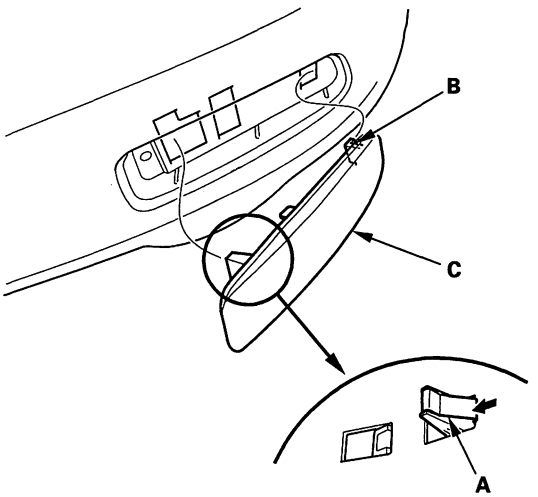


3. Reattach the hook to the rear bumper first, and push the clip into place securely.



BACK

Protected by AR



## Adjustment

1. Remove these items:

   - Front bumper (see page 20-146)
   - Cowl cover (see page 20-163)

2. Slightly loosen each bolts (A).

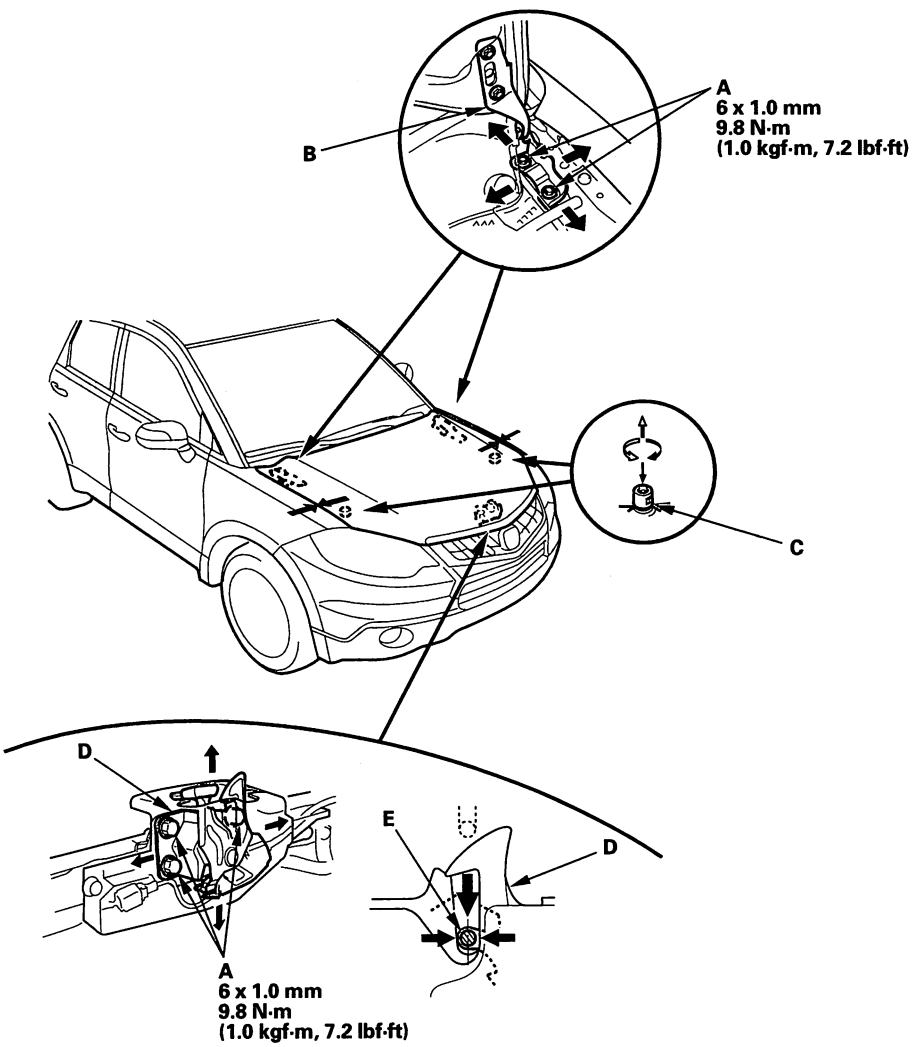


3. Adjust the hood alignment in this sequence:

   - Adjust the hood right and left, as well as forward and rearward, by using the elongated holes in the hood hinges (B).
   - Turn the hood edge cushions (C), as necessary, to make the hood fit flush with the body at the front and side edges.

4. Adjust the hood latch (D) to obtain the proper height at the forward edge, and move the hood latch right or left until the striker (E) is centered in the hood latch.

5. Tighten the bolts to the specified torque.

(cont'd)

Protected by AR



## Adjustment (cont'd)

6. Check that the hood opens properly and closes securely.

7. Apply touch-up paint to the hinge mounting bolts and around the hinges, and let the paint dry.

8. Apply multipurpose grease to the hood latch and hood hinges as indicated by the arrows.

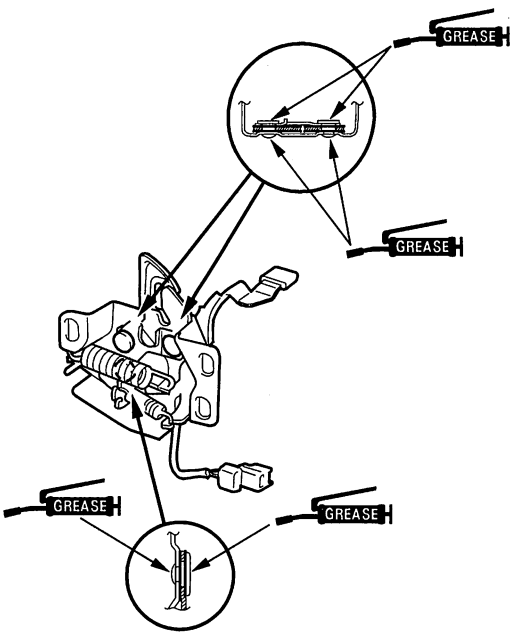


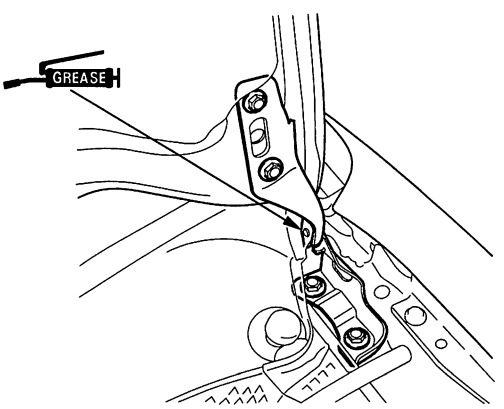


9. Reinstall all of the removed parts.

## Hood Seal Replacement

1. Using a clip remover, detach the clips, then remove the hood seals (A). Take care not to scratch the hood.

**Fastener Locations**

▷ : **Clip, 10**

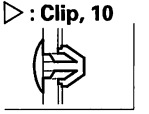

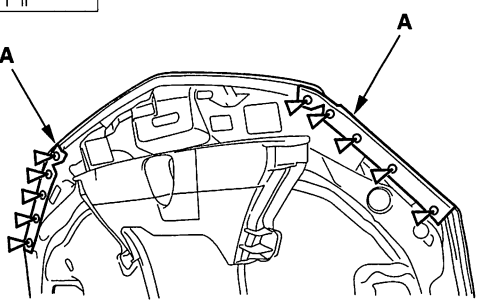


2. Install the seals in the reverse order of removal, and check if the clips are damaged or stress-whitened clips, and if necessary, replace them with new ones.



BACK

Protected by AR

## Hood Insulator Replacement

1. Remove the charge air cooler air duct (see page 20-155).

2. Using a clip remover, detach the clips. Release the hooks (A), then remove the hood insulator (B). Take care not to scratch the hood.

**Fastener Locations**

▷ : Clip, 6

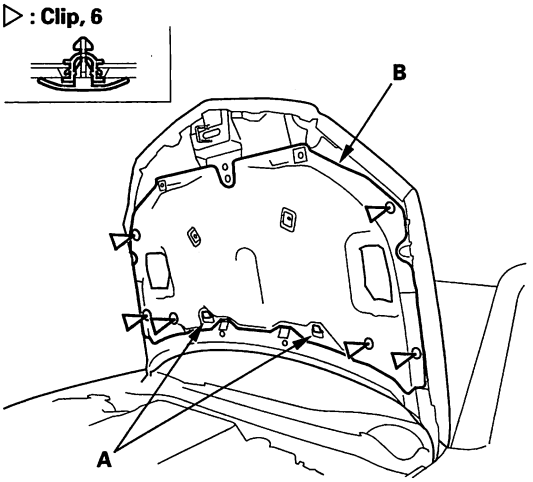


3. Install the insulator in the reverse order of removal, and note these items:

   - Check if the clips are damaged or stress-whitened, and if necessary, replace them with new ones.
   - Push the clips into place securely.

## Charge Air Cooler Air Duct Removal /Installation

1. With the help of an assistant, remove the charge air cooler air duct (A).

**Fastener Locations**

B ▶ : Bolt, 4  C ▶ : Bolt, 2  ● : Nut, 1

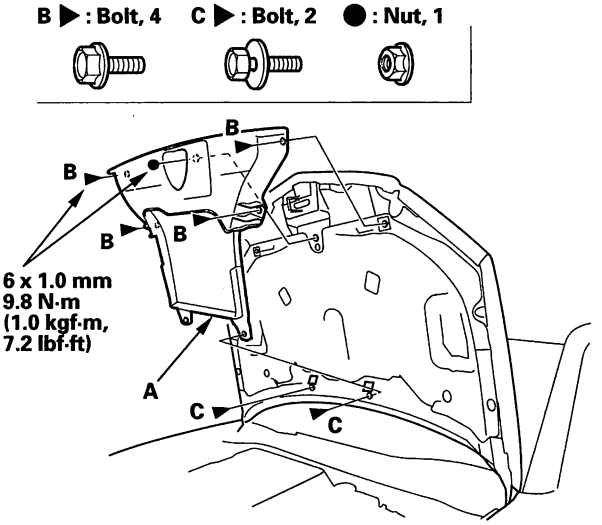


2. Install the air duct in the reverse order of removal.

Protected by AR



## Adjustment

NOTE:
- Have an assistant help you when adjusting the tailgate.
- Take care not to scratch the tailgate, body and other related parts.
- Put on gloves to protect your hands.

1. Remove these items:
   - Quarter pillar trim, both sides (see page 20-75)
   - Tailgate weatherstrip, as needed (see page 20-158)
   - Ceiling light (see page 22-197)
2. Pull down the rear portion of the headliner (see page 20-85). Take care not to bend the headliner excessively.
3. Remove the tailgate support strut from each side (see page 20-157).
4. Pry up at the notch (A) to release the front hooks (B) and pivot the cap (C) on the rear hooks (D), then remove the cap.

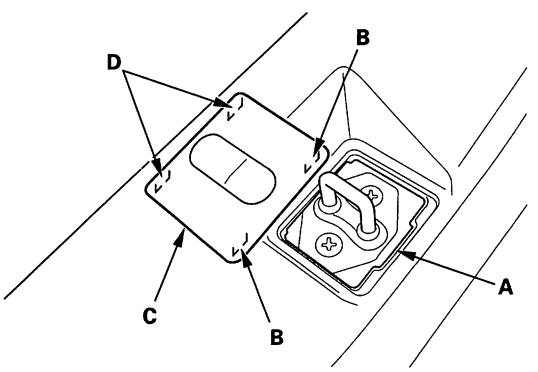


5. Slightly loosen the screws.
6. Adjust the tailgate (A) alignment in the following sequence:
   - Adjust the tailgate hinges (B) right and left, using the elongated holes.
   - Turn the tailgate edge cushions (C), in or out as necessary, to make the tailgate fit flush with the body at the side edges.
   - Adjust the fit between the tailgate and tailgate opening by moving the striker (D), and adjust the striker right or left until it is centered in the tailgate latch (E).

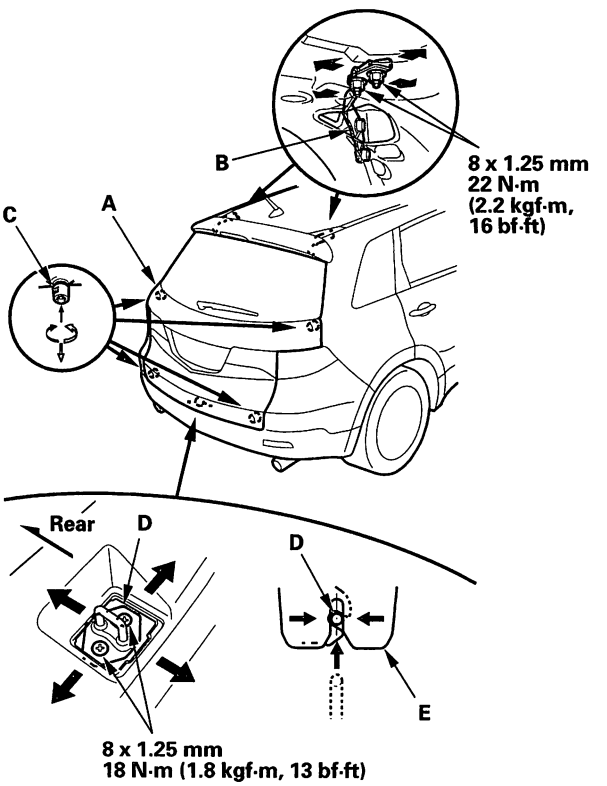




BACK

Protected by AR

7. Tighten each bolt and nut securely.

8. Check that the tailgate opens properly and locks securely.

9. Reinstall the support struts securely.

10. Apply touch-up paint to the hinge mounting nuts and around the hinges, and let the paint dry.

11. Apply multipurpose grease to the pivot portion of the tailgate hinges (A) as indicated by the arrows.

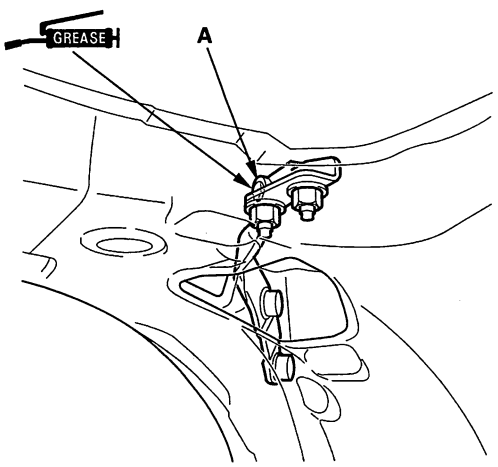


12. Reinstall all of the removed parts.

## Tailgate Support Strut Replacement

1. With the help of an assistant, use a flat-tip screwdriver (A) to pry the support strut clips (B) from each end of the support strut (C) at the tailgate and body, then release the support strut from the pivot bolts (D). Do not remove the clips from the support strut.

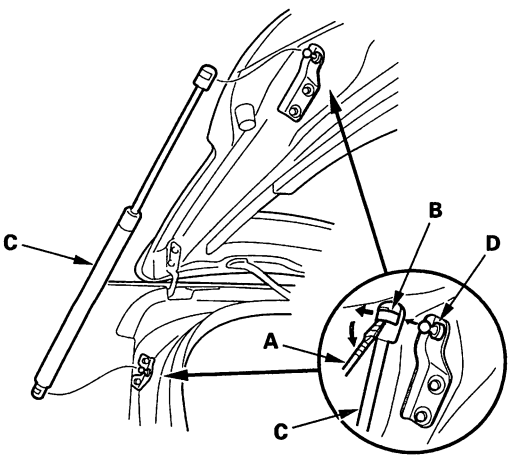


2. Remove the bolts securing the support strut bracket (A).

**Fastener Locations**

**▶ : Bolt, 2**

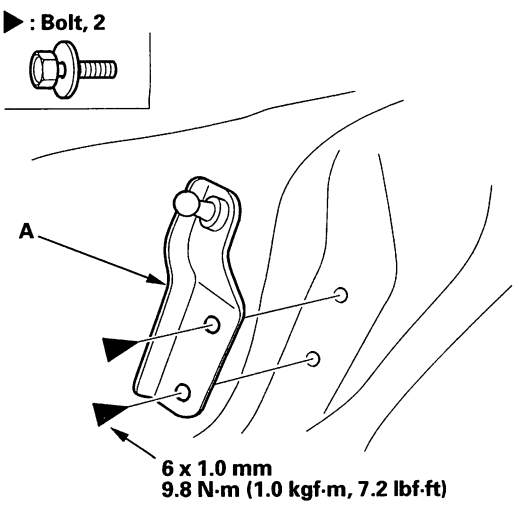


(cont'd)

Protected by AR



## Tailgate Support Strut Replacement (cont'd)

3. Remove the bolts securing the support strut bracket (A).

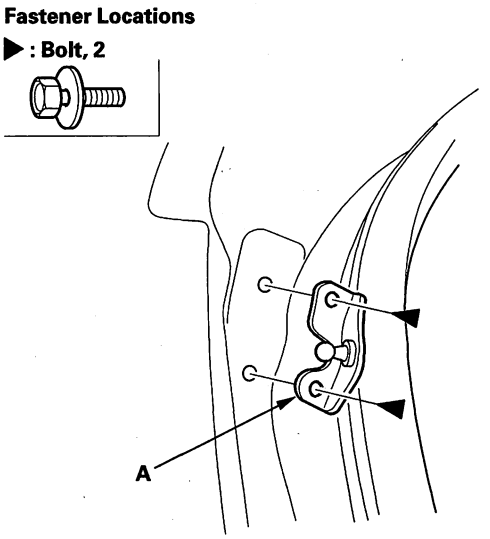


4. Set the clips (A) to the original position, then reattach the support strut (B) on the pivot bolts (C) by pushing the support strut onto the pivot.

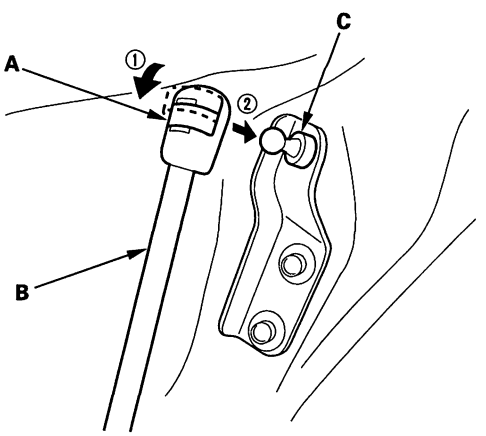


## Tailgate Weatherstrip Replacement

1. Remove the tailgate weatherstrip (A) by pulling out on it.

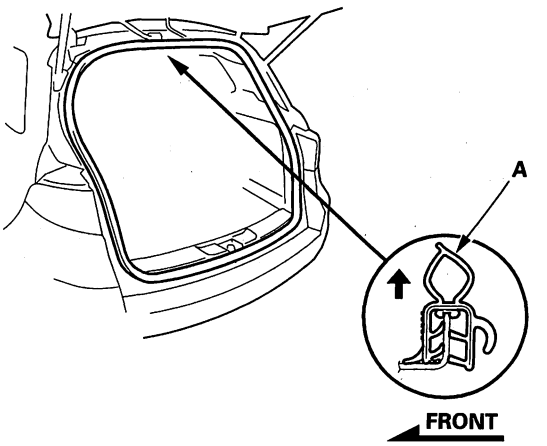


2. Locate the painted alignment mark (A) on the tailgate weatherstrip (B). Align the painted mark with the alignment tab in the center of the tailgate opening, and install the weatherstrip. Make sure it's seated completely and facing in the direction shown. Make sure there are no wrinkles in the weatherstrip.

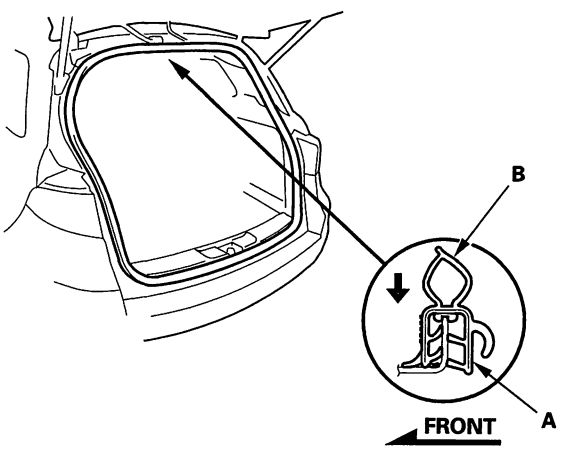


3. Check for water leaks.



BACK

Protected by AR



## Adjustment

1. Release the hooks (A), then remove the lid (B).

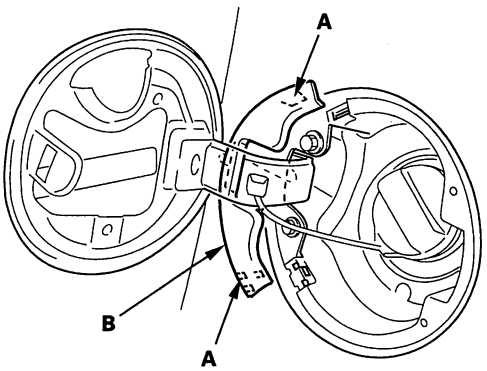


2. Slightly loosen the hinge mounting bolts (A).

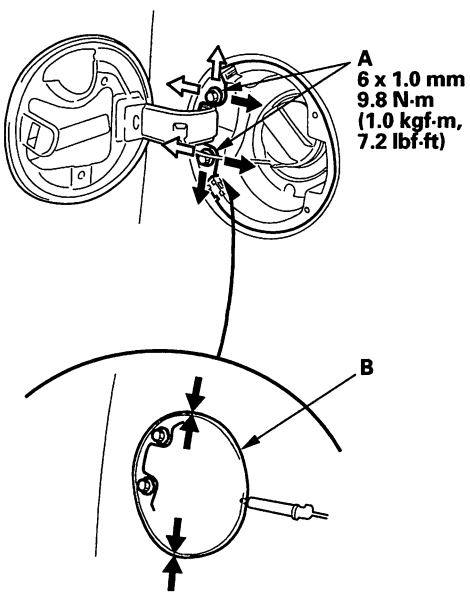


3. Adjust the fuel fill door (B) in or out until it's flush with the body, and up or down as necessary to equalize the gaps.

4. Tighten the hinge mounting bolts.

5. Check that the fuel fill door opens properly and locks securely, and check that the rear of the door is flush with the body.

6. Apply multipurpose grease to each location indicated by the arrows.

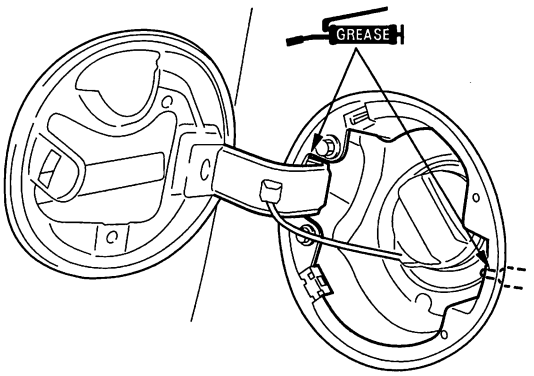


7. Apply touch-up paint to the hinge mounting bolts and around the hinges.

Protected by AR



## Fuel Cap Adapter Replacement

NOTE: Take care not to scratch the body.

1. Remove the cap (A) by turning it counterclockwise, and remove the screw.

**Fastener Location**

**▶ : Screw, 1**

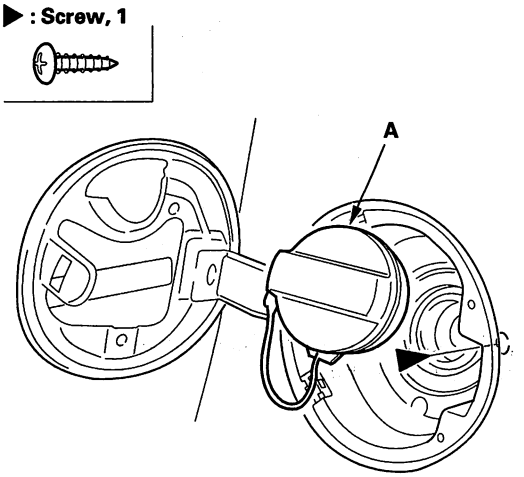


2. Remove the fuel fill door adjustment lid (see step 1 on page 20-159).

3. Remove the fuel pipe protector (see page 20-179).

4. Remove the bolts, and lower the fuel filler pipe (A), then remove it from the fuel cap adapter (B).

**Fastener Locations**

**▶ : Bolt, 2**

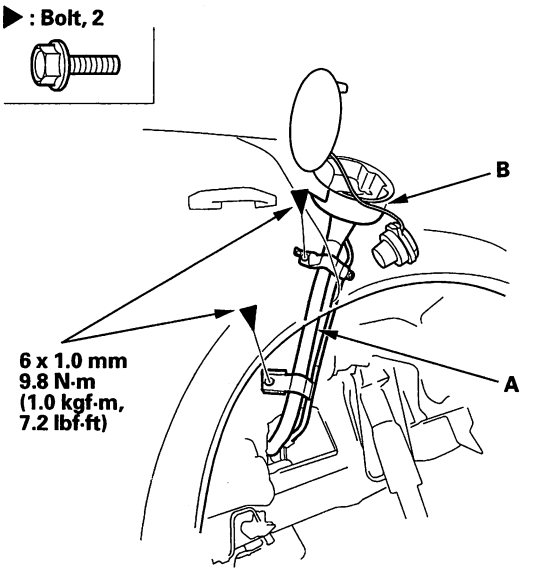


5. Turn the fuel cap adapter (A), then remove it.

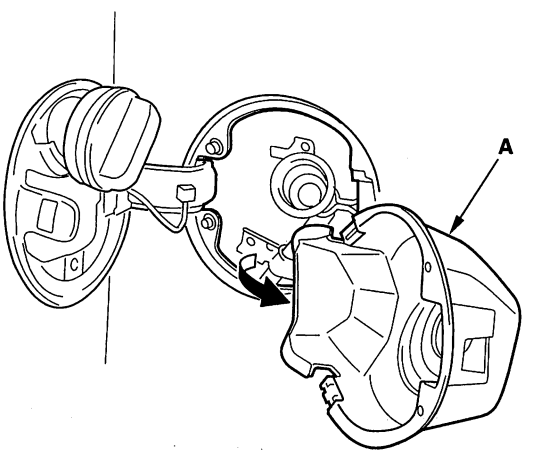


6. Install the adapter in the reverse order of removal.



BACK

Protected by AR



## Front Grille Replacement

NOTE:
- When removing components, use the trim tools or equivalent.
- Take care not to scratch the rear bumper and body.

1. Remove the front bumper (see page 20-146).

2. Remove the screws (A) and clips (B). Then remove the front grille (C) from the front bumper (D) by pulling it out. Take care not to scratch the front bumper.

**Fastener Locations**

**A ▶ : Screw, 4 B ▷ : Clip, 4**

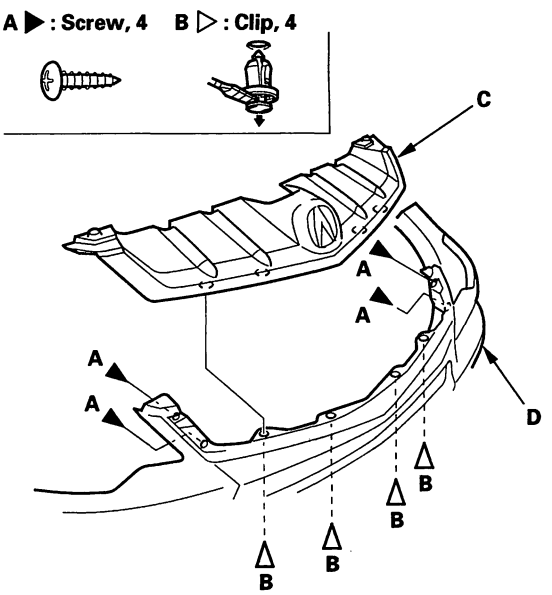


3. Remove the screw, then remove front emblem (A) from the front grille base (B).

**Fastener Locations**

**▶ : Screw, 2**

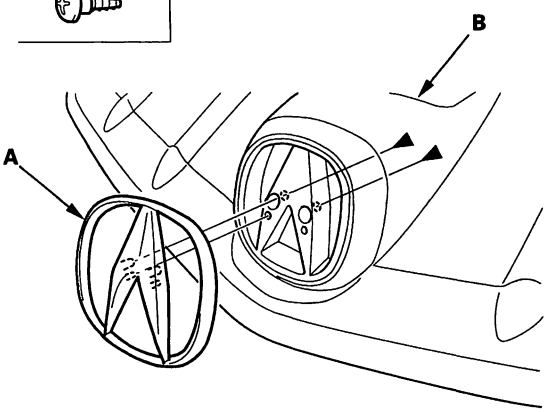


4. Remove the screws, then release the hooks (A) and remove the grille molding (B) from the front grille base (C).

**Fastener Locations**

**▶ : Screw, 4**

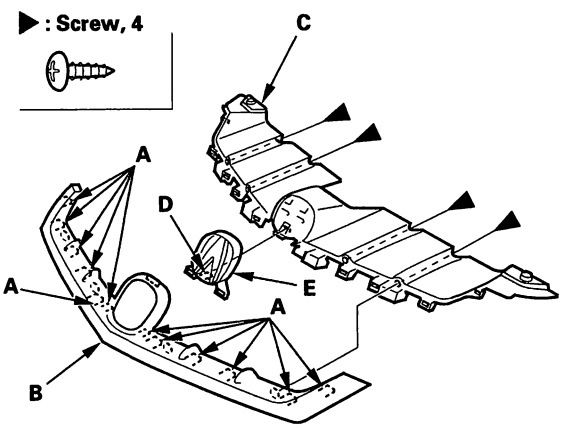


5. If necessary, release the hook (D), and remove the front emblem base (E).

6. Install the grille in the reverse order of removal.

Protected by AR



## Hood Molding Replacement

**Special Tools Required**
KTC trim tool set SOJATP2014 *
* Available through the American Honda Tool and Equipment Program; call 888-424-6857

NOTE:
- Use the appropriate tool from the KTC trim tool set to avoid damage when prying components.
- Take care not to scratch the hood.

1. Using a 6 mm socket wrench, remove the special nuts (A), and detach the clips (B) by pushing it, then remove the hood molding (C). Take care not to scratch the hood.

**Fastener Locations**
**A ● : Nut, 4 B ▷ : Clip, 2 D ▶ : Bolt, 4**

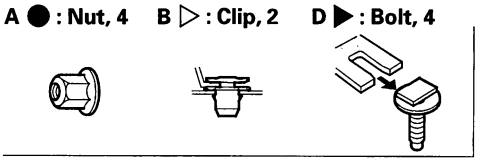

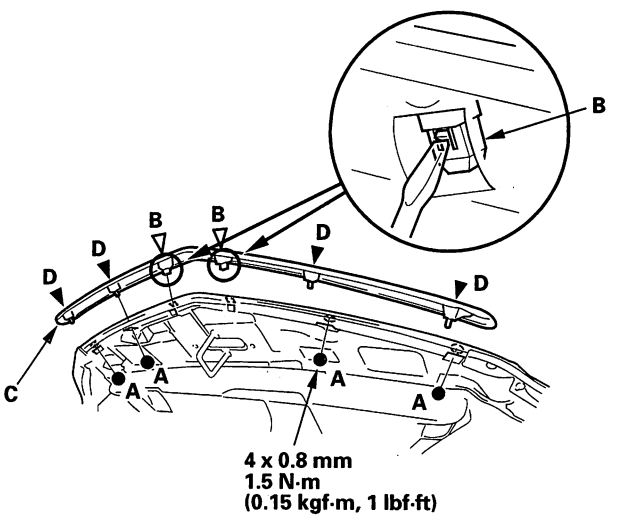


2. Install the molding in the reverse order of removal.

NOTE:
- Check if the clips are damaged or stress-whitened, and if necessary, replace them with new ones.
- After removing the molding, replace the nuts and stud bolts (D) with new ones.

## Front Fender Trim Replacement

NOTE: Take care not to scratch the fender trim and body.

1. Pull back the ends of hood rear seal (A), then release the clips (B, C), and remove the front fender trim (D).

**Fastener Locations**
**B ▷ : Clip, 1 C ▷ : Clip, 2**

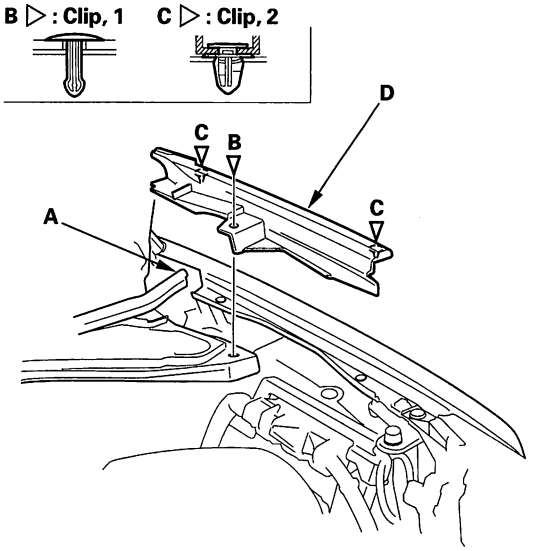


2. Install the fender trim in the reverse order of removal:
   - Check if the clips are damaged or stress-whitened, and if necessary, replace them with new ones.
   - Push the clips into place securely.
   - Reinstall the hood seal.



BACK

Protected by AR

## A-Pillar Corner Trim Replacement

**Special Tools Required**
KTC trim tool set SOJATP2014 *
* Available through the American Honda Tool and Equipment Program; call 888-424-6857

1. Open the front door.

2. Apply protective tape around the body to prevent damage. Carefully insert a trim tool next to the upper clip, and detach the clip by prying on the A-pillar corner trim (A). Take care not to scratch the body and related parts.

**Fastener Locations**
**▷: Clip, 2**

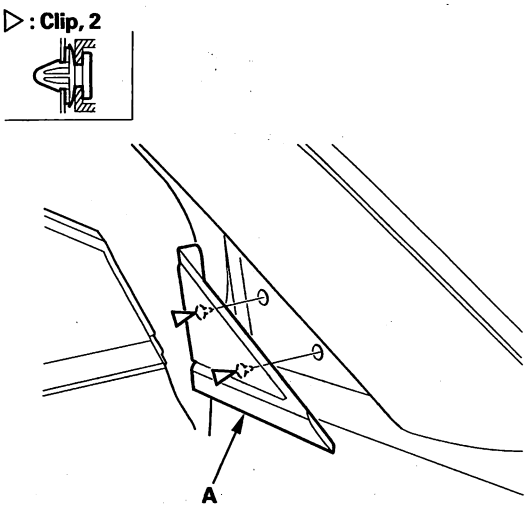


3. Pull the A-pillar corner trim back by hand to detach the remaining lower clips, then remove the trim.

4. Install the trim in the reverse order of removal, and note these items:

   - Check if the clips are damaged or stress-whitened, and if necessary, replace them with new ones.
   - Push the clip portions into place securely.

## Cowl Cover Replacement

**Special Tools Required**
KTC trim tool set SOJATP2014 *
* Available through the American Honda Tool and Equipment Program; call 888-424-6857

NOTE:
- Put on gloves to protect your hands.
- Take care not to scratch the cowl covers and body.
- Use the appropriate tool from the KTC trim tool set to avoid damage when removing components.

1. Remove the these items:

   - Windshield wiper arms (see page 22-247).
   - Front fender trim, both sides (see page 20-162).

2. From both sides of the cowl cover, release the hooks (A) from the cowl cover (B) and the front fender (C), then release the hood hinge cover (D) from roof molding (E), then remove the covers.

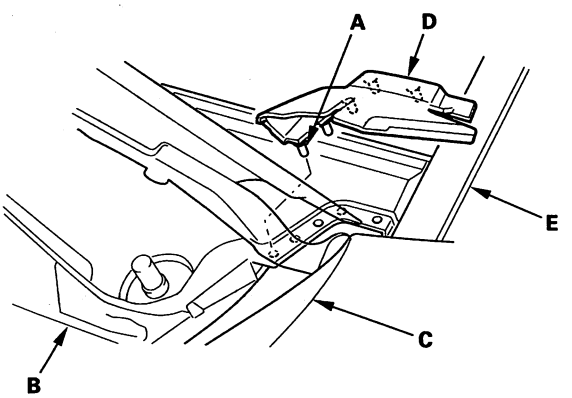


(cont'd)

Protected by AR



## Cowl Cover Replacement (cont'd)

3. Remove the passenger's cowl cover (A).

   -1 Remove the hood rear seal (B) by pu lling it out.
   -2 Remove the clip (C).
   -3 Release two front hooks (D) from the edge of the cover.
   -4 Detach the clips (E, F) by carefully pulling the cover upward, then remove the cover. Take care not to scratch the body.

**Fastener Locations**

C ▷ : Clip, 1 E ▷ : Clip, 1 (Blue) F ▷ : Clip, 3 (White)

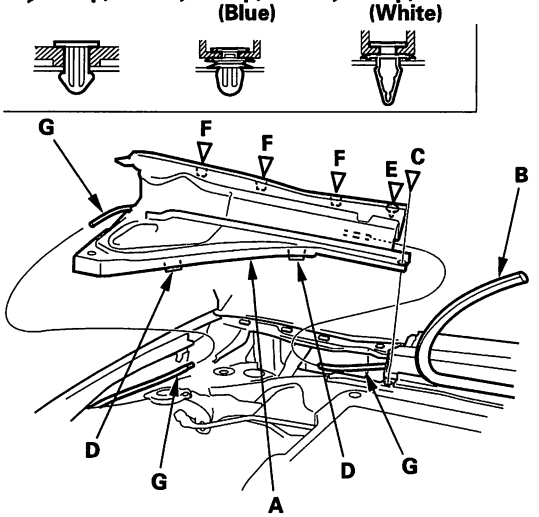


4. Disconnect the windshield washer tubes (G).

5. Remove the driver's cowl panel (A).

   -1 Remove the clips (B).
   -2 Release two front hooks (C) from the edge of the cover.
   -3 Detach the clips (D, E) by carefully pulling the cover upward, then remove the cover. Take care not to scratch the body.

**Fastener Locations**

B ▷ : Clip, 2 D ▷ : Clip, 1 (Blue) E ▷ : Clip, 4 (White)

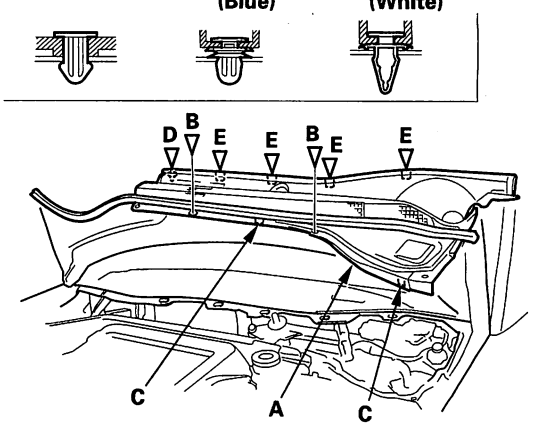


6. Install the cover in the reverse order of removal, and note these items:

   - Check if the clips are damaged or stress-whitened, and if necessary, replace them with new ones.
   - Make sure the washer tube is connected securely.
   - Push the clip portions into place securely.



BACK

Protected by AR

## Door Molding Replacement

NOTE:
- Take care not to scratch the door.
- Put on gloves to protect your hands.

1. Remove the door panel (see page 20-6).

2. From the front door, remove the plug cap (A), then remove the screw from the back of clip (B).

**Fastener Location**

**▶ : Screw, 1**

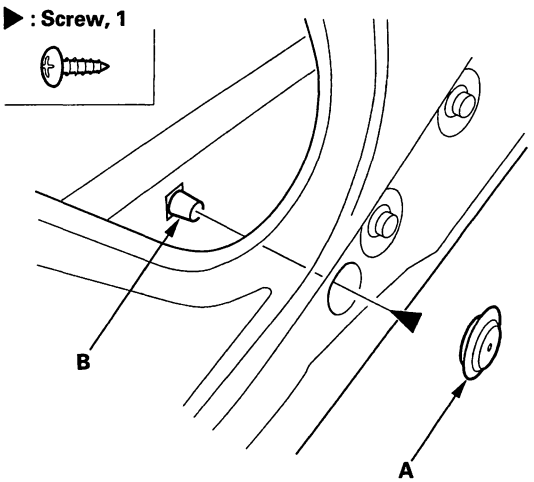


3. Using a utility knife, carefully cut the double-sided adhesive tape (A) along the edge of the door molding (B).

**Front door**

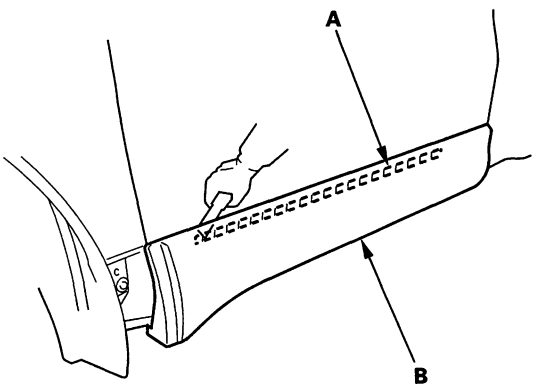


**Rear door**

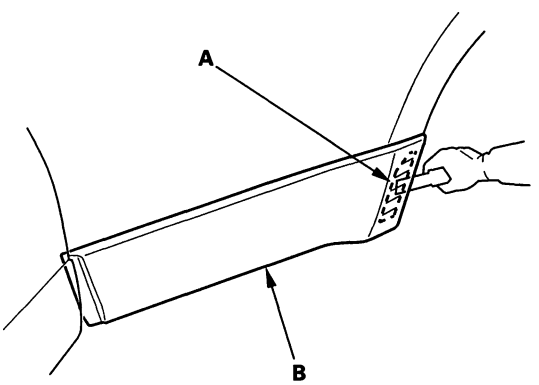


(cont'd)

Protected by AR



## Door Molding Replacement (cont'd)

4. With the help of an assistant, hold the side sill panel (A). Cover the rear portion of panel with a shop towel, then remove the panel by tapping it with a plastic hammer. Do not tap the panel too hard. The clips will stay in the door panel. Turn the clips (B, C) 45 ° counterclockwise from the door panel, and remove them.

**Front door**

**Fastener Locations**

**B ▷ : Clip, 12** **C ▷ : Clip, 1**

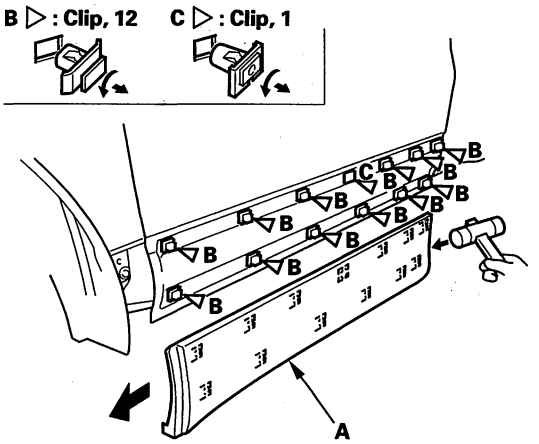


**Rear door**

**Fastener Locations**

**B ▷ : Clip, 8**

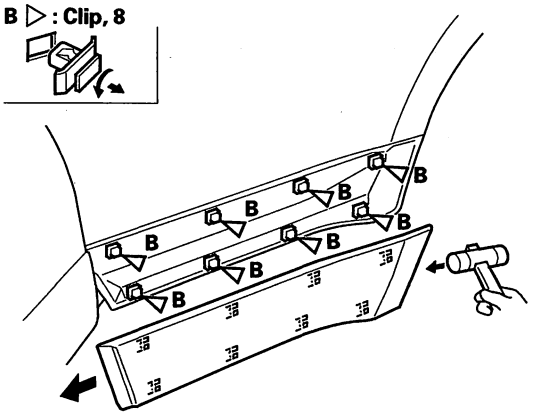


5. Check if the clips are damaged or stress-whitened, and if necessary, replace them with new ones.

6. Install the clips on the side sill panel.



BACK

Protected by AR

7. Scrape off the remaining double-sided adhesive tape from the molding and door, then clean the molding and door surfaces with a sponge dampened in isopropyl alcohol.

8. Rear door: Apply primer to the areas where the panel will be applied.

9. Attach the double-sided adhesive tape (A) to the molding (B), and fold the edge of each adhesive backing from the double-sided adhesive tape.

**Front door**

**Adhesive tape: Thickness 1.2 mm (0.047 in.)**
**Width 6 mm (0.2 in.)**

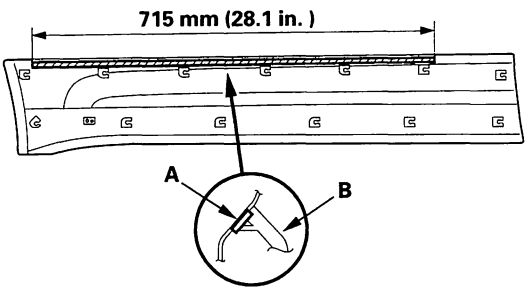


**Rear door**

**Adhesive tape: Thickness 1.2 mm (0.047 in.)**
**Width 28 mm (1.1 in.)**

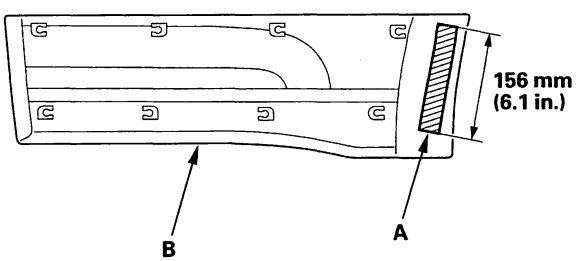


10. Holding the molding (A) up, and fit all the clips (B, C) into the holes in the door, then push on the molding until the clips snap into place.

**Front door**

**Fastener Locations**
**B ▷ : Clip, 12 C ▷ : Clip, 1**

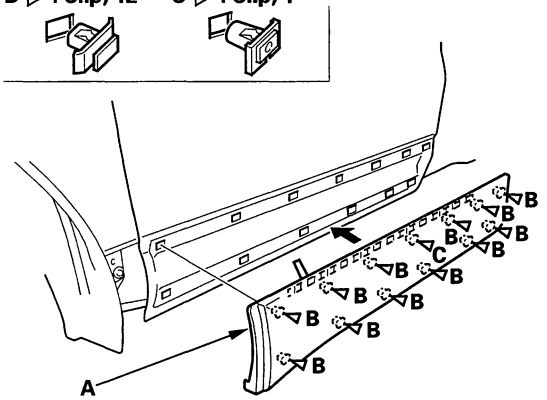


**Rear door**

**Fastener Locations**
**B ▷ : Clip, 8**

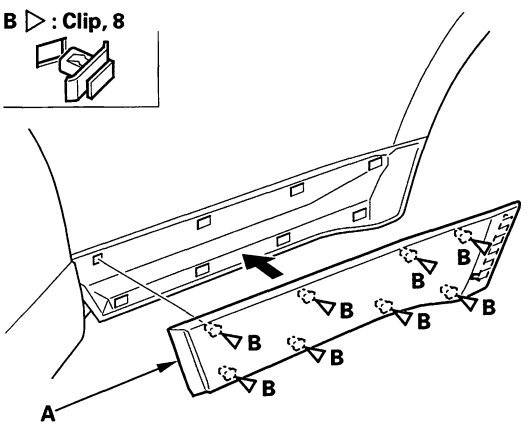


11. Carefully pull the adhesive backing away, and push the molding into place securely.

(cont'd)

Protected by AR



## Door Molding Replacement (cont'd)

12. Install the screw into the back of clip, then reinstall the plug cap to the front door.

**Fastener Location**

**▶ : Screw, 1**

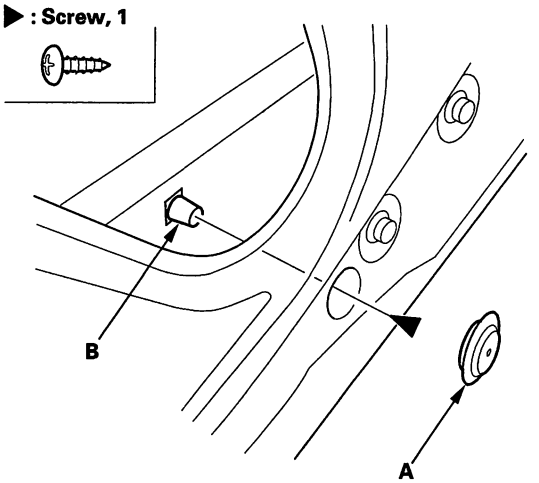


## Lower Front Fender Panel Replacement

NOTE:
- When removing components, use the trim tools or equivalent.
- Take care not to scratch the body.
- Put on gloves to protect your hands.

1. Remove the screws (A) and clips (B, C), then remove the lower front fender panel (D).

**Fastener Locations**

**A ▶ : Screw, 3 B ▷ : Clip, 1 C ▷ : Clip, 1**

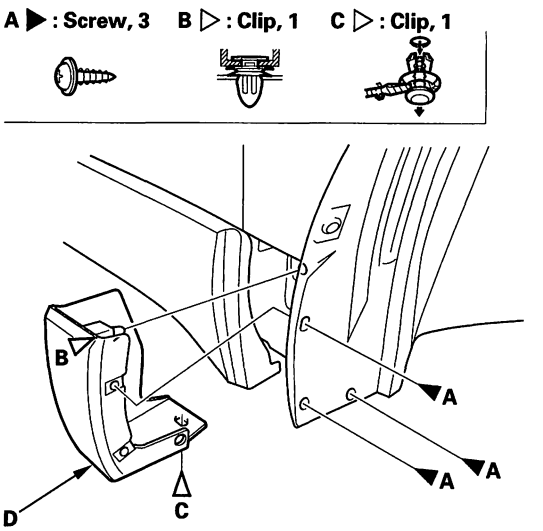


2. Install the panel in the reverse order of removal, and note these items:

   - Check if the clips are damaged or stress-whitened, and if necessary, replace them with new ones.
   - Push the clips into place securely.



BACK

Protected by AR

# Roof Molding Replacement

**Special Tools Required**
KTC trim tool set SOJATP2014 *
* Available through the American Honda Tool and Equipment Program; call 888-424-6857

NOTE:
- Use the appropriate tool from the KTC trim tool set to avoid damage when removing components.
- Take care not to scratch the body.

**Removal**

1. Remove these items:

   - Hood hinge cover (see step 2 on page 20-163)
   - Tailgate hinge cover (see page 20-171)

2. Start at the rear and working to the front, slowly pull the roof molding (A) up to release the molding with the clips (B) from the stud bolts (C) on the body, and to release the molding from the clips (D).

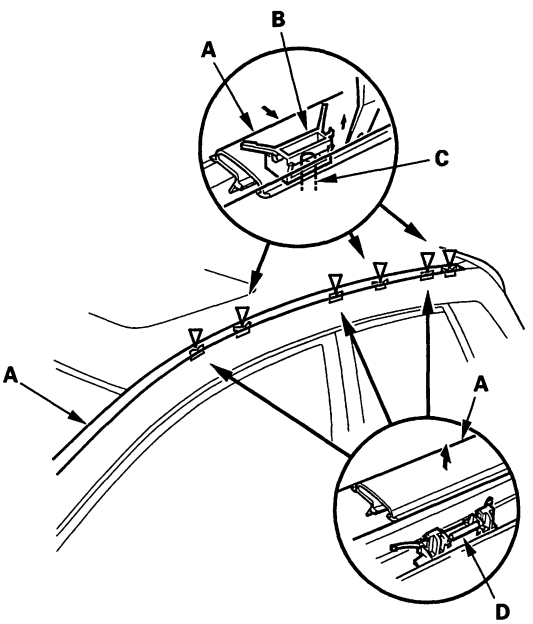


3. Remove the windshield portion of the roof molding (A).

   1 Carefully insert a trim tool remover (B) in under the molding next to the clip (C).
   2 Pry the outside edge of the roof molding at the clip portion while pushing the molding toward the outside to release the hooks (D).
   3 Gradually work your way down to release each of the clip portions, and release the molding from the hooks (E) on each clip.

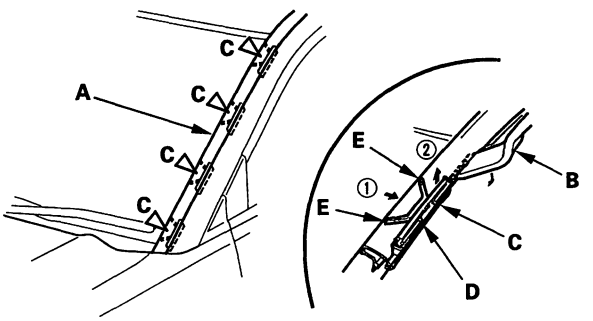


(cont'd)

Protected by AR



## Roof Molding Replacement (cont'd)

4. Release the hooks (A), then remove the clips (B, C, D) and the retainers (E) from the body.

   NOTE: Replace any damaged clips and retainers.

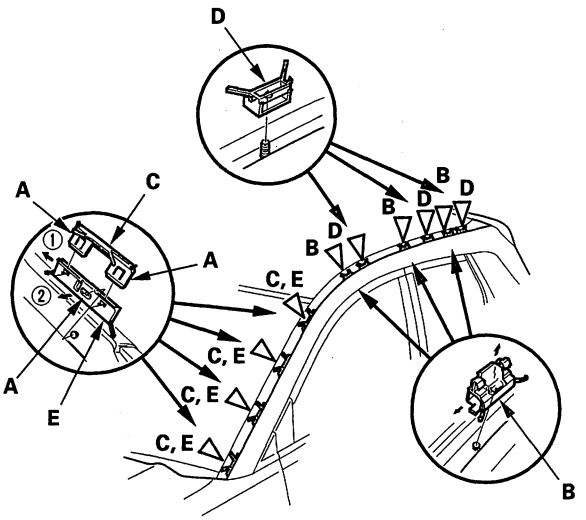


**Installation**

5. Install the clips (A, B) on the roof molding (C).

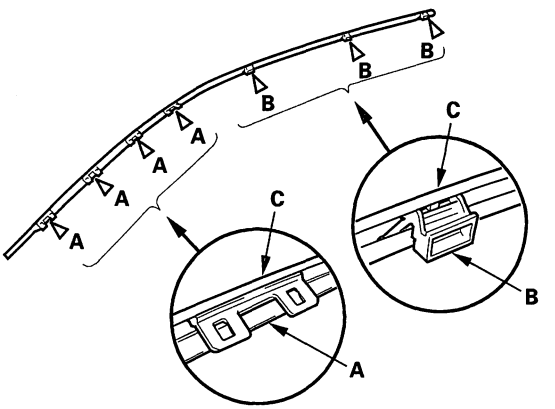


6. Install the retainers (A) and the clip (B) on the body.

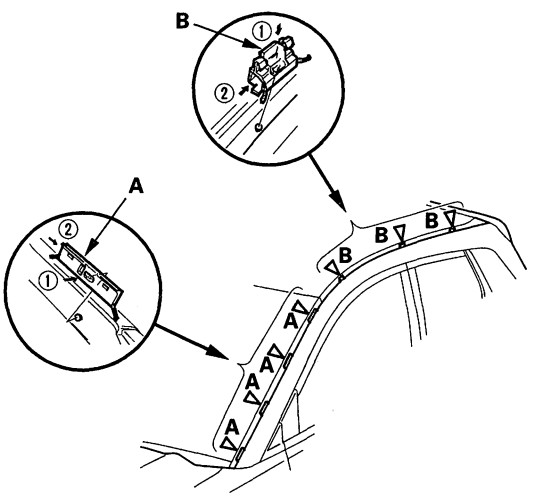


7. Install the tailgate hinge cover (see page 20-171).



BACK

Protected by AR

8. Install the roof molding (A).

   -1 Hold the roof molding up on the roof, and align each clip to the stud bolts and retainers.
   -2 Reconnect the rear end of the roof molding to the front end of the tailgate hinge cover (B).
   -3 From the rear to the front, fit the roof molding to the clips (C), and the clips (D) to the stud bolts (E), then push on the molding until they snap into place.
   -4 From the top to the bottom, push the clips (F) in the windshield portion of the roof molding until they snap into place into the retainers (G).

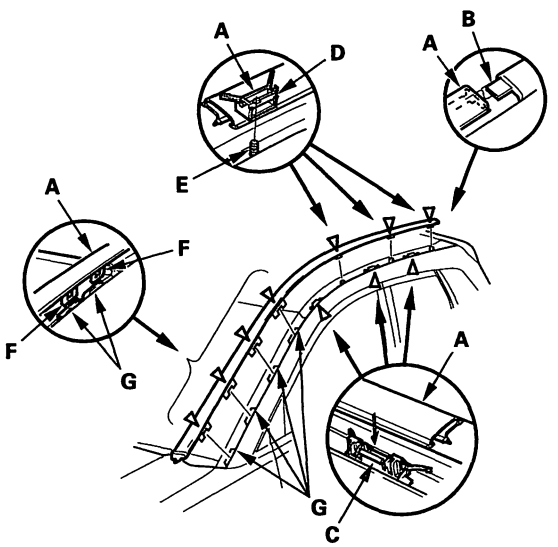


9. Install the molding in the reverse order of removal, and note these items:

   - Check for the damaged or stress-whitened clips and retainers, and if necessary, replace them with new ones.
   - Push the clips and retainer portions into place securely.

## Tailgate Hinge Cover Replacement

NOTE: Take care not to scratch the tailgate hinge cover and body.

1. Open the tailgate. Release the inside hook (A) from the tailgate hinge (B) by pulling the rear of the tailgate hinge cover (C) up.

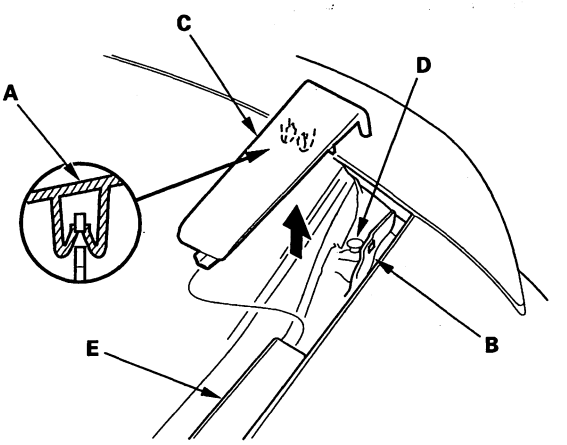


2. Slide the tailgate hinge cover rearward to release it from the pin (D), and to disengage it from the rear end of the roof molding (E), then move the cover forward while lifting it. Close the tailgate, then remove the cover.

3. Install the cover in the reverse order of removal.

Protected by AR



## Tailgate Spoiler Trim Replacement

NOTE: Take care not to scratch the tailgate spoiler trim and tailgate.

1. From inside the tailgate, remove the bolts (A).

**Fastener Locations**

**A ▶ : Bolt, 4** **C ▷ : Clip, 1** (Replace.) **D ▷ : Clip, 6**

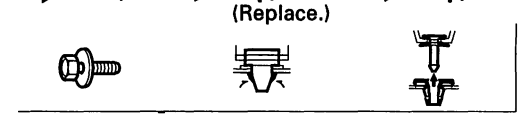

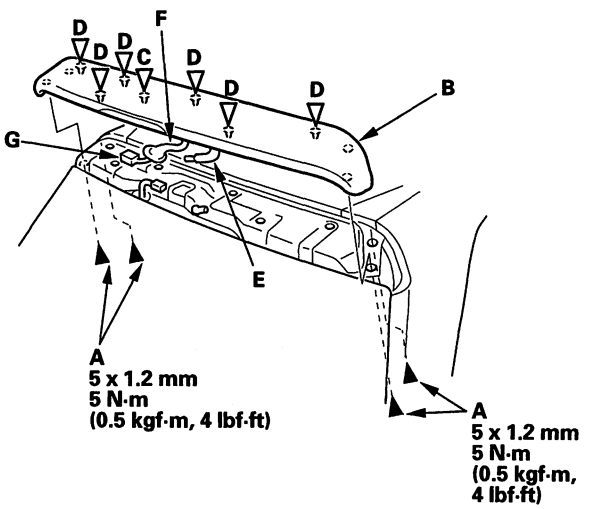


2. Remove the tailgate upper trim panel (see page 20-80).

3. Remove the tailgate spoiler trim (B).

   -1 From inside the tailgate, release the clip (C).
   -2 Close the tailgate, then lift the tailgate spoiler trim to detach the clips (D).
   -3 Disconnect the rear window wiper washer tube (E).
   -4 Remove the grommet (F) from the tailgate, then disconnect the high mount brake light connector (G).

4. Install the trim in the revrse order of removal, and note these items:

   - Check if the clips are damaged or stress-whitened, and if necessary, replace them with new ones.
   - Make sure the rear window wiper washer tube is connected securely, and the high mount brake light connector is plugged in properly.



BACK

Protected by AR

# Rear License Trim Replacement

**Special Tools Required**
KTC trim tool set SOJATP2014 *
* Available through the American Honda Tool and Equipment Program; call 888-424-6857

NOTE:
- Put on gloves to protect your hands.
- Take care not to bend or scratch the trim and panels.
- Use the appropriate tool from the KTC trim tool set to avoid damage when removing components.

1. Remove the maintenance lid (A) by prying the hooks (B) and pulling it out.

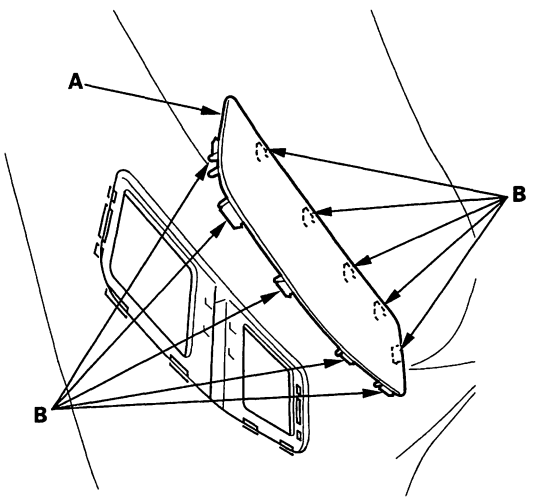


2. From inside the tailgate, push out and remove the clips (A).

**Fastener Locations**
**A ▷ : Clip, 2** **C ▷ : Clip, 2**

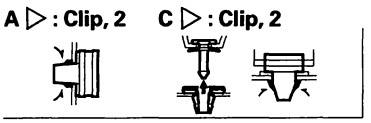

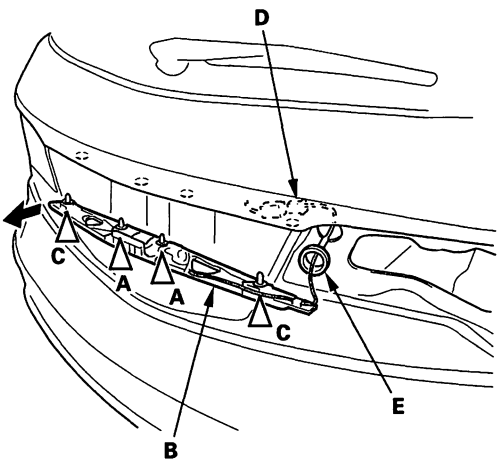


3. Remove the rear license trim (B).

   1. Close the tailgate, then the rear license trim (B) to detach the clips (C).
   2. Disconnect the rear view camera connector (D).
   3. Remove the grommet (E) from the tailgate.

4. Install the trim in the reverse order of removal, and note these items:

   - Check if the clips are damaged or stress-whitened, and if necessary, replace them with new ones.
   - Make sure the rear view camera connector is plugged in properly.
   - Push the clip portions into place securely.

Protected by AR



## Tailgate Lower Trim Replacement

NOTE:
- Put on gloves to protect your hands.
- Take care not to scratch the tailgate.

1. Remove the tailgate lower trim panel (see page 20-80).

2. Remove the taillights and lid taillights (see page 22-179).

3. Remove the bolts securing the tailgate lower trim (A).

**Fastener Locations**

**▶ : Bolt, 6**

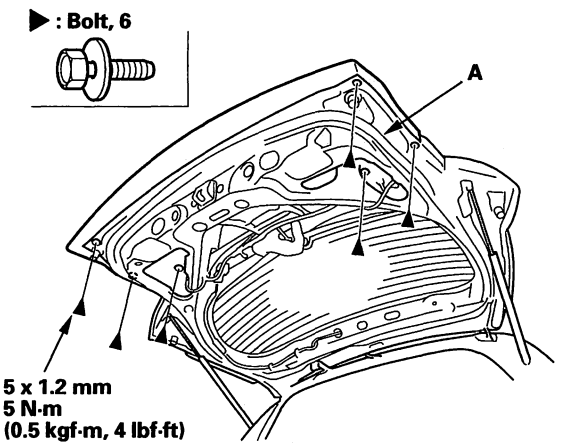


4. Pull out along the upper and lower edges on the tailgate lower trim (A) to release the clips (B, C), then remove the tailgate lower trim from the tailgate.

**Fastener Locations**

**B ▷ : Clip, 8  C ▷ : Clip, 3**

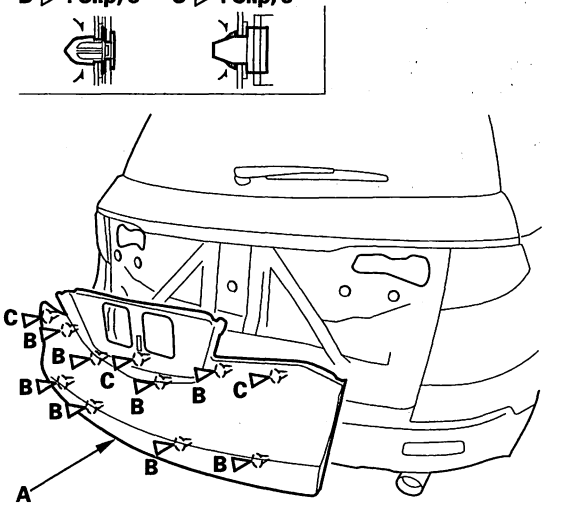


5. Install the trim in the reverse order of removal, and note these items:

   - Check if the clips are damaged or stress-whitened, and if necessary, replace them with new ones.
   - Push the clips portions into place securely.



BACK

Protected by AR

## Emblem/Sticker Replacement

NOTE: When removing the emblems, take care not to scratch the body.

1. To remove the front "A" emblem, remove the front emblem base (see page 20-161).
2. Clean the body surface with a sponge dampened in isopropyl alcohol. After cleaning, keep oil, grease, and water from getting on the surface.
3. Apply the emblem/sticker where shown. When installing the ULEV sticker on the inside surface of the left rear door quarter glass, align the sticker with the edge of the glass mark as shown, then press the sticker into place, and remove the application tape.
4. After installing the front "A" emblem, reinstall the front grille (see page 20-161).

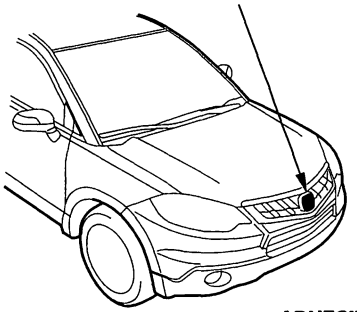


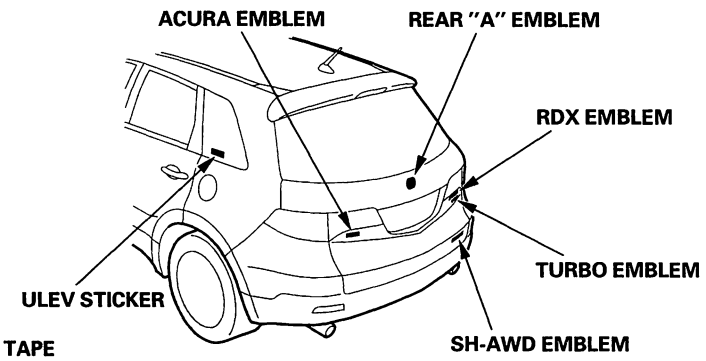


Unit: mm (in.)
Adhesive tape: Thickness 0.8 mm (0.03 in.)

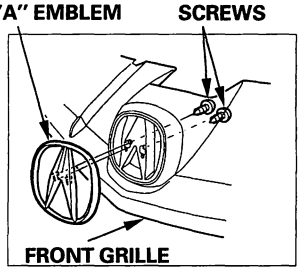


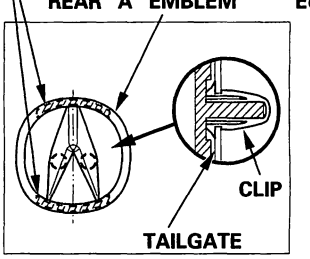


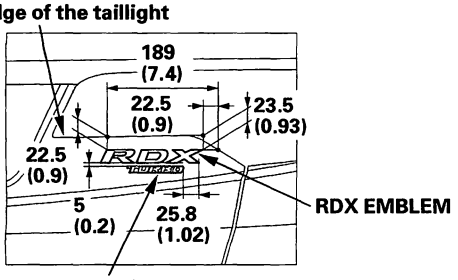


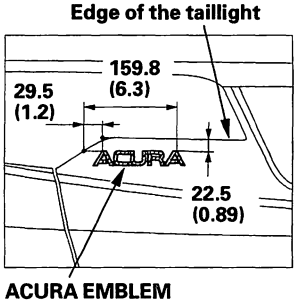


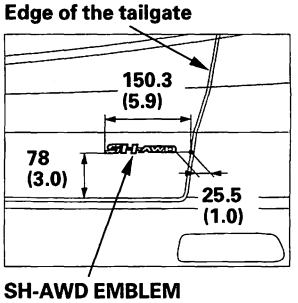


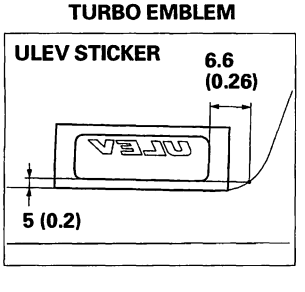

Protected by AR



## Front Inner Fender Replacement

NOTE: Take care not to scratch the body.

1. Remove the front inner fender (A).

   -1 On the back of the wheel arch, remove the screws (B, C, D).
   -2 From under the front bumper (E), remove the clip (F) securing the front bumper, splash shield (G), and front inner fender.
   -3 From the wheel arch, remove the clips (H) securing the front inner fender (and splash shield) to the body.
   -4 Remove the front inner fender.

**Fastener Locations**

**B ▶ : Screw, 1  C ▶ : Screw, 4  D ▶ : Screw, 3  F ▷ : Clip, 1  H ▷ : Clip, 9**

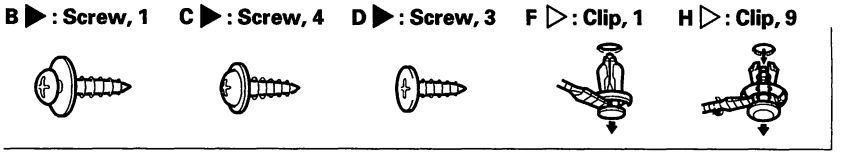

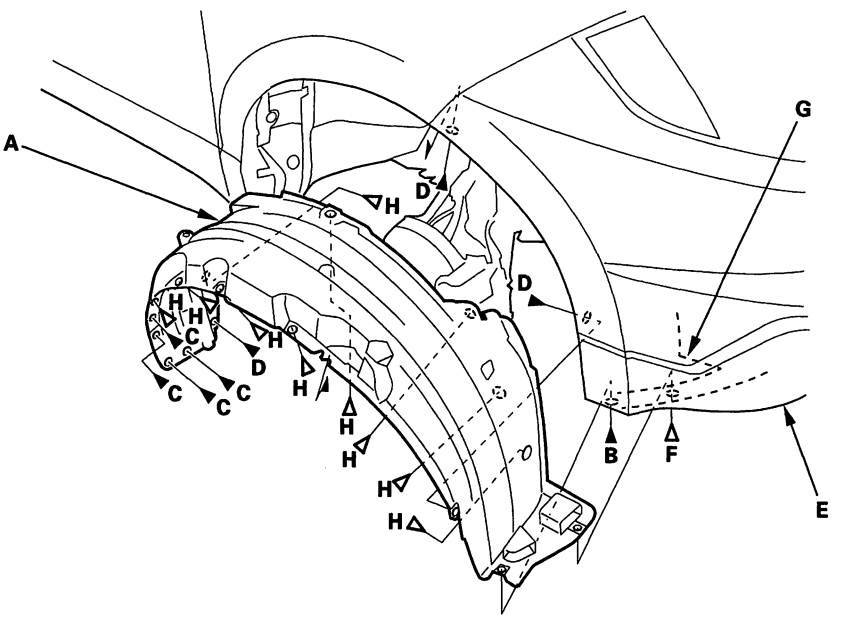


2. Install the inner fender in the reverse order of removal, and note these items:

   - Check if the clips are damaged or stress-whitened, and if necessary, replace them with new ones.
   - Push the clips into place securely.



BACK

Protected by AR

## Front Splash Shield Replacement

NOTE: Take care not to scratch the body.

1. Remove the splash shield (A).

   -1 From under the front bumper (B), remove the screws (C).
   -2 From under the body, remove the clips (D, E).
   -3 Pull the splash shield out.

   NOTE: To remove the clips C and D, pry the inner the clip up at the edge near the line (I) on its head.

**Fastener Locations**

**C ▶ : Screw, 2 D ▷ : Clip, 5 E ▷ : Clip, 1**

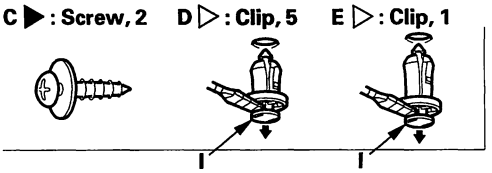


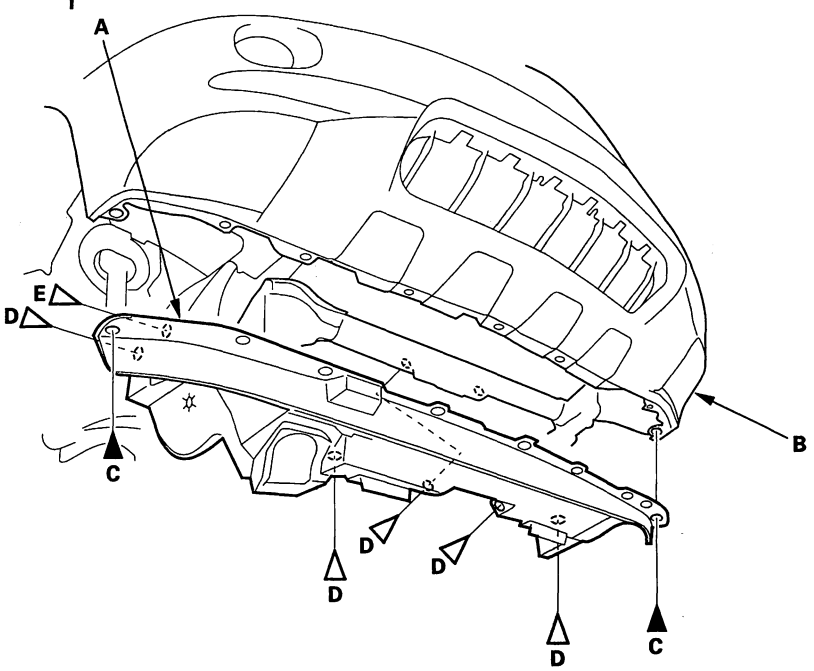


2. Install the splash shield in the reverse order of removal, and note these items:

   - Check if the clips are damaged or stress-whitened, and if necessary, replace them with new ones.
   - Push the clips into place securely.

BACK

Protected by AR



## Front Fender Fairing Replacement

1. Remove the front inner fender as needed (see page 20-176).

2. From the wheel arch, remove the clips.

**Fastener Locations**

▷ : **Clip, 2**

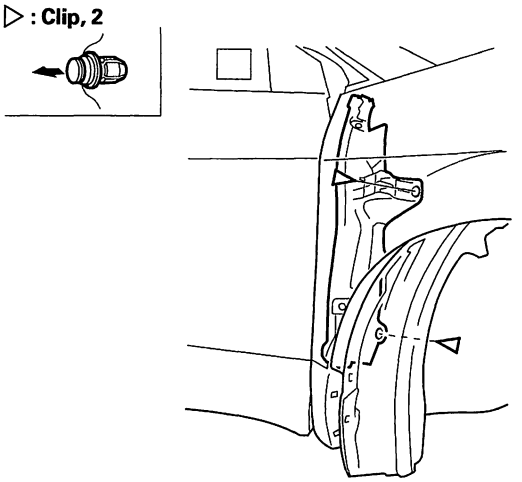

3. Open the front door. From inside the door, remove the clips securing the front fender fairing (A).

**Fastener Locations**

▷ : **Clip, 2**

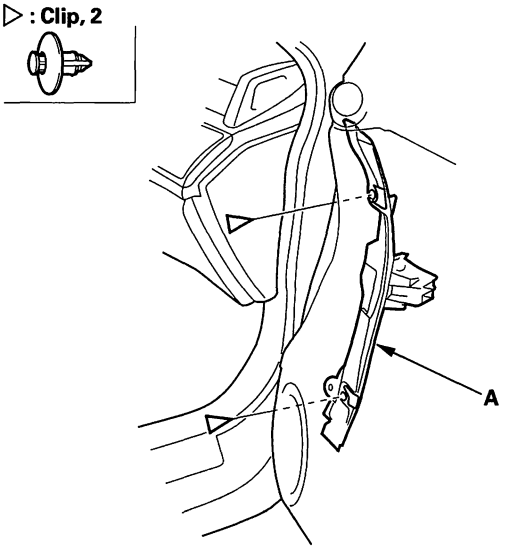


4. Remove the front fender fairing (A).

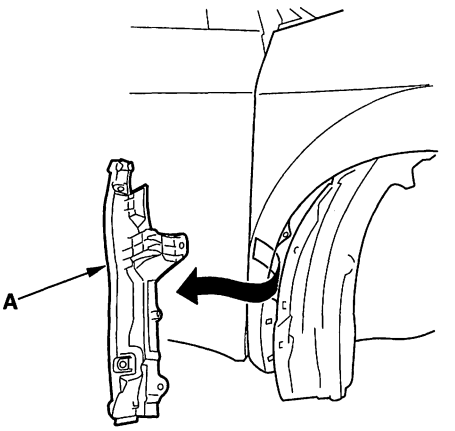


5. Install the fender fairing in the reverse order of removal, and note these items:

   - Check if the clips are damaged or stress-whitened, and if necessary, replace them with new ones.
   - Push the clips and hooks into place securely.



BACK

Protected by AR

## Fuel Pipe Protector Replacement

NOTE:
- Take care not to scratch the body.
- Put on gloves to protect your hands.

1. Remove the left rear wheel (see page 18-32).

2. Remove the bolts (A) and clips (B), then remove the fuel pipe protector (C).

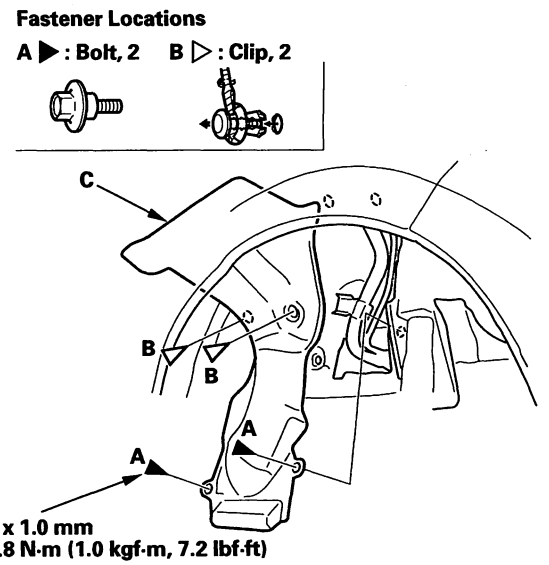


3. Install the protector in the reverse order of removal, and note these items:

   - Check if the clips are damaged or stress-whitened, and if necessary, replace them with new ones.
   - Push the clips into place securely.

## Rear Fender Cover Replacement

NOTE: Take care not to scratch the rear bumper and body.

1. Remove the screws (A) and clip (B), then remove the rear fender cover (C) from the rear bumper (D) and body.

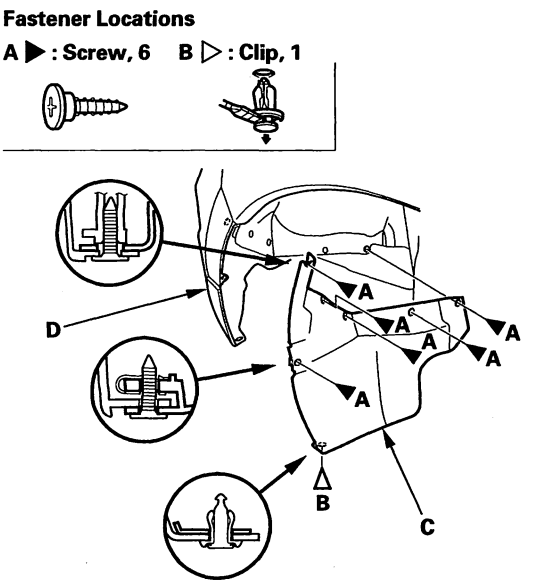


2. Install the fender cover in the reverse order of removal.

Protected by AR



## Rear Wheel Arch Protector Replacement

1. Remove the rear wheel arch protector (A) by pulling it away from the wheel arch.

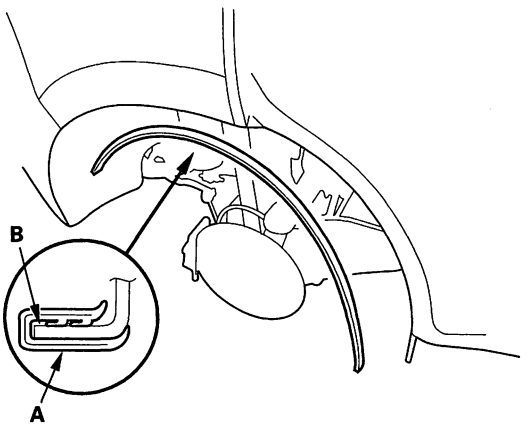


2. Apply clear weatherstrip sealant (B) into the channel of the wheel arch protector all the way around.

3. To reinstall the rear wheel arch protector, align it with the rear of the wheel arch, and then push it into place securely.

## Rear Door Wheel Arch Seal Replacement

NOTE:
- When removing components, use the trim tools or equivalent.
- Take care not to scratch the body.
- Put on gloves to protect your hands.

1. Remove the screw securing the rear door wheel arch seal (A).

**Fastener Locations**

**▶ : Screw, 3**

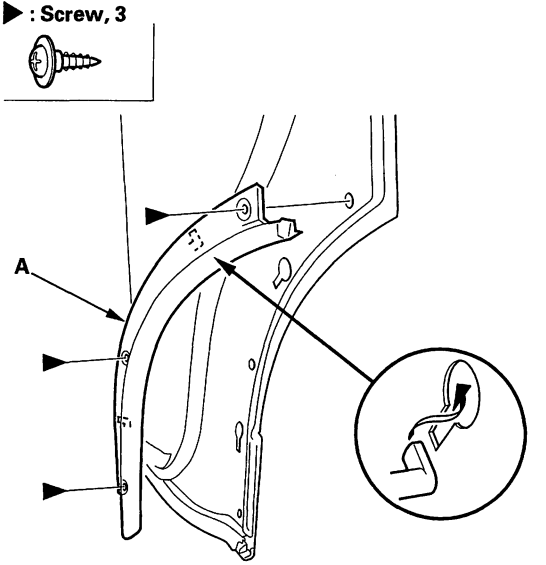


2. If necessary, separate the rear door wheel arch seal (A) and the rear door wheel arch seal bracket (B) by pulling the seal from the bracket.

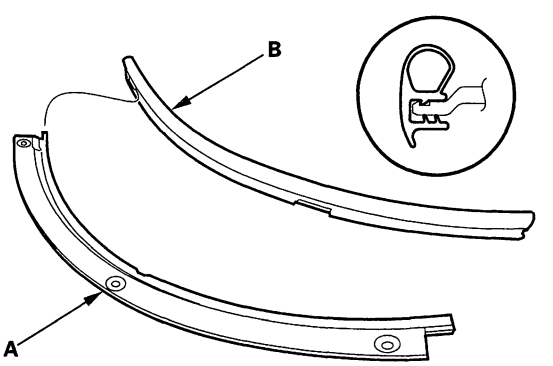




BACK

Protected by AR

## Rear Strake Replacement

1. Remove the clip (A) and screw (B), then remove the rear strake (C). Take care not to scratch the rear bumper (D).

**Fastener Locations**

**A ▷ : Clip, 1 B ▶ : Screw, 1**

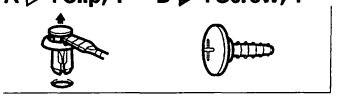

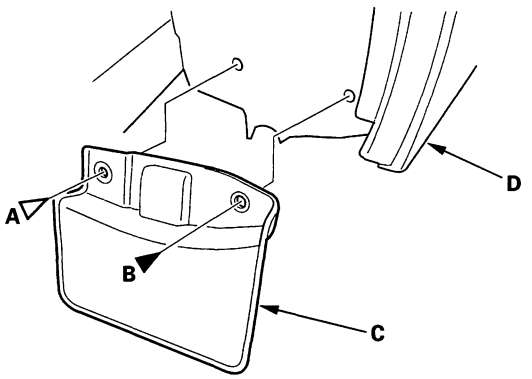


2. Install the strake in the reverse order of removal.

## Rear Air Outlet Replacement

1. Remove the rear bumper (see page 20-150).
2. Detach the hooks (A), then remove the rear air outlet (B). Take care not to scratch the body.

**Left side**

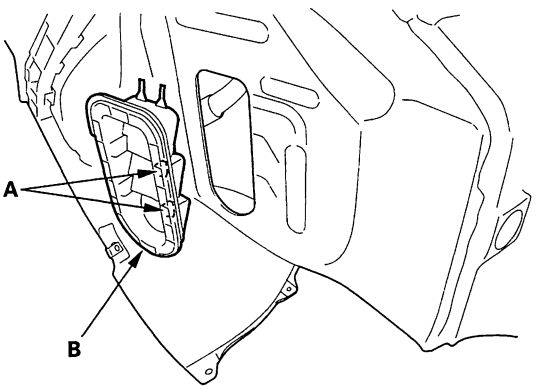


**Right side**

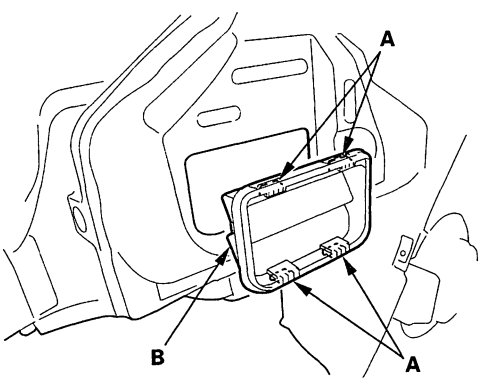


3. Install the air outlet by pushing on the hook portions until the hooks snap into place.

Protected by AR

# Openers

## Component Location Index

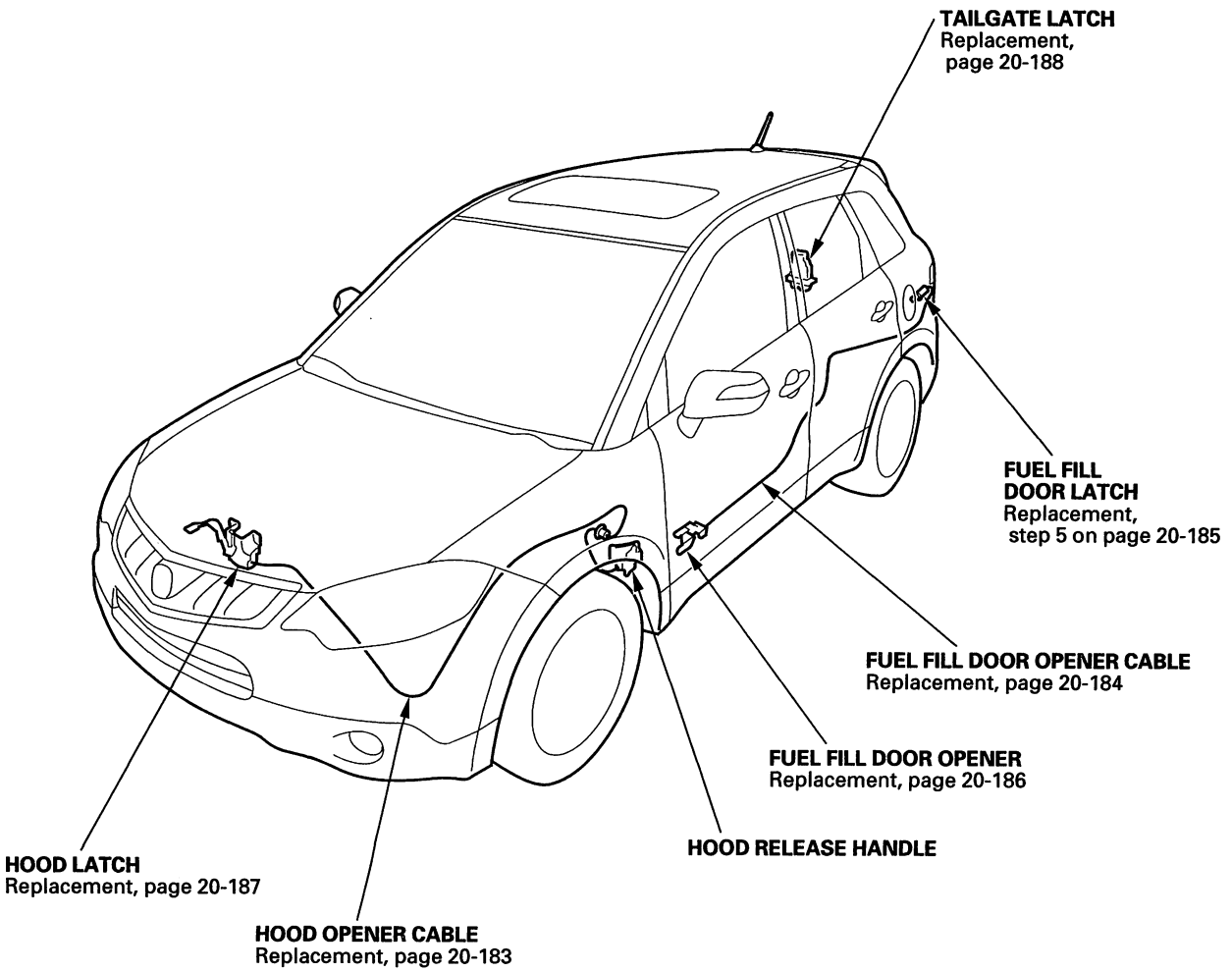




BACK

Protected by AR

## Hood Opener Cable Replacement

NOTE:
- Put on gloves to protect your hands.
- Take care not to scratch the body and related parts.

1. Remove these items:

   - Front bumper (see page 20-146)
   - Front inner fender (see page 20-176)
   - Kick panel (see step 3 on page 20-67).

2. Disconnect the hood opener cable (A) from the hood latch (B) (see page 20-187), and remove the hood release handle (C) (see page 20-188). Take care not to kink the cable.

**Fastener Locations**

▷ : **Clip, 9**

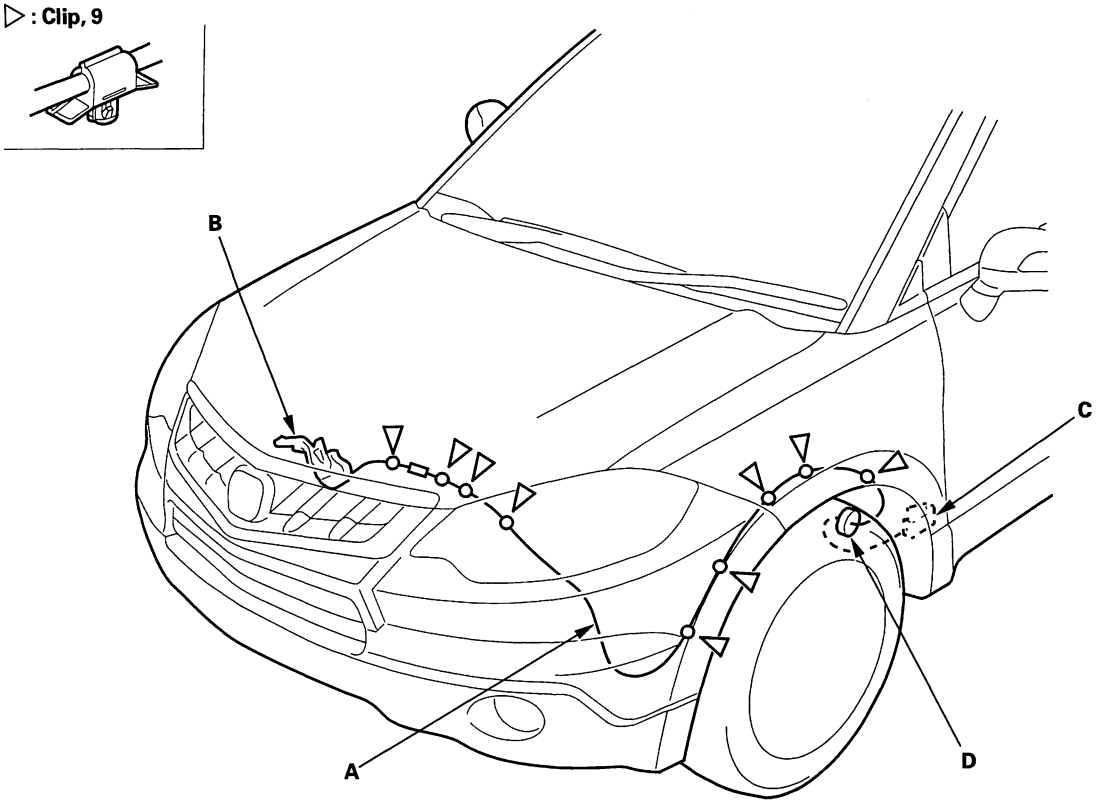


3. Using a clip remover, detach the clips, release the hood opener cable from the clip, and remove the grommet (D) from the body, then remove the hood opener cable from the vehicle. Take care not to kink the cable.

4. Install the cable in the reverse order of removal, and note these items:

   - Check if the clips are damaged or stress-whitened, and if necessary, replace them with new ones.
   - Route the cable through the hole (I) in the body.
   - Make sure the hood opens properly and locks securely.

BACK

Protected by AR



## Fuel Fill Door Opener Cable Replacement

SRS components are located in this area. Review the SRS component locations (see page 24-12), and the precautions and procedures (see page 24-14) before performing repairs or service.

NOTE:
- Put on gloves to protect your hands.
- Take care not to scratch the body and related parts.

1. Remove these items:
   - Rear seat cushion (see page 20-137)
   - Rear seat side bolster (see page 20-138)
   - Front door sill trim, driver's (see page 20-66)
   - Kick panels, driver's sides (see step 3 on page 20-67)
   - Rear door sill trim, (see page 20-68)
   - B-pillar lower trim (see page 20-72)
   - Cargo area side trim panel, left side (see step 4 on page 20-77)
   - Fuel fill door opener (see page 20-186)
2. Pull the carpet back as needed.
3. Release the opener cable (A) from the clip (B) and hooks (C) of the wire harness bands. Remove the wire harness band (D) and cushion tape (E).

**Fastener Locations**

**B ▷ : Clip, 1** **C ▷ : Hook, 4** **D ▷ : Band, 1**

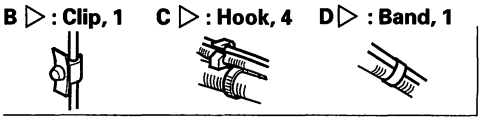

**E ▷ : Cushion tape, 2**

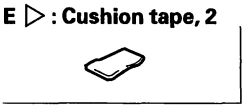

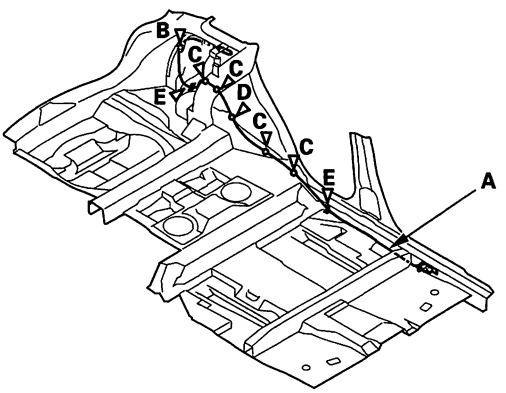




BACK

Protected by AR

4. While pinching the hooks (A) from inside the vehicle, remove the grommet (B) from the body.

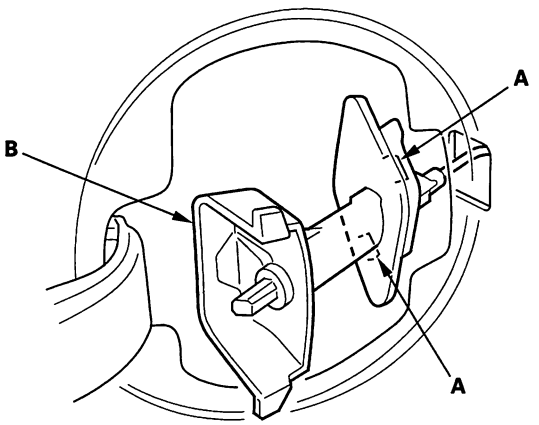


5. Release the hook (A), then remove the grommet (B) from the fuel fill door latch (C).

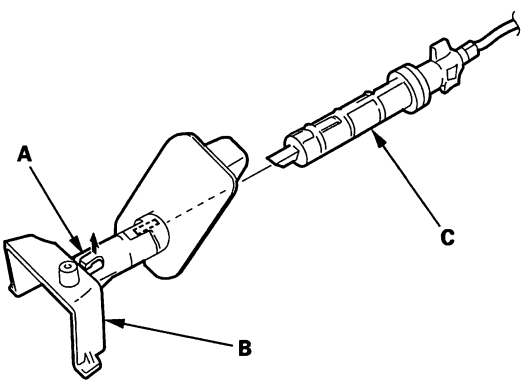


6. Remove the fuel fill door opener cable from the vehicle. Take care not to kink the cable.

7. Install the opener cable in the reverse order of removal, and note these items:

   - Align the marks (A) on the opener cable (B) with the cable clip (C), wire harness band (D) and cushion tapes (E) as shown.
   - Replace any damaged clips, and replace the cushion tape.

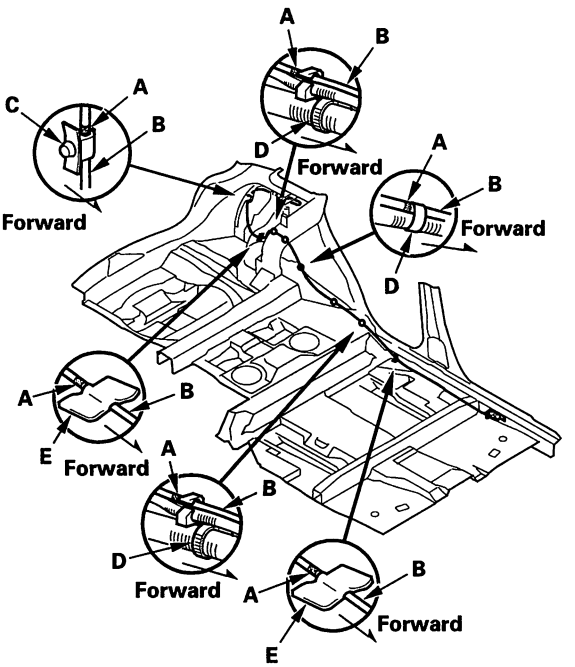

Protected by AR



## Fuel Fill Door Opener Replacement

1. Remove these items:
   - Front seat, drive side (see page 20-118)
   - Front door sill (see page 20-66)
2. Remove the bolts, then remove the fuel fill door opener (A) from the body.

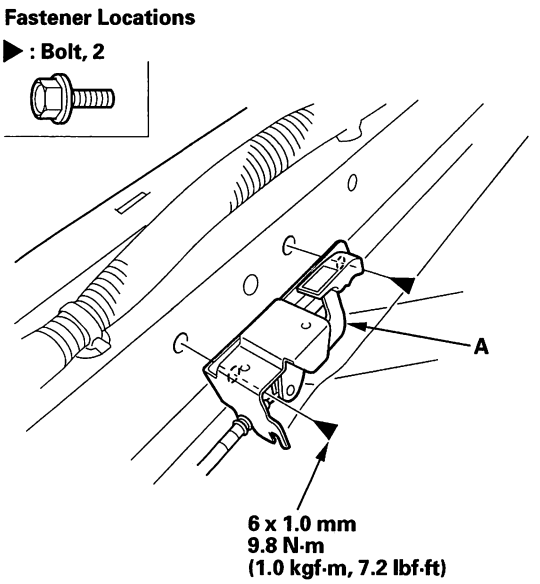


3. Disconnect the fuel fill door opener cable (A), then remove the opener (B). Take care not to kink the cable.

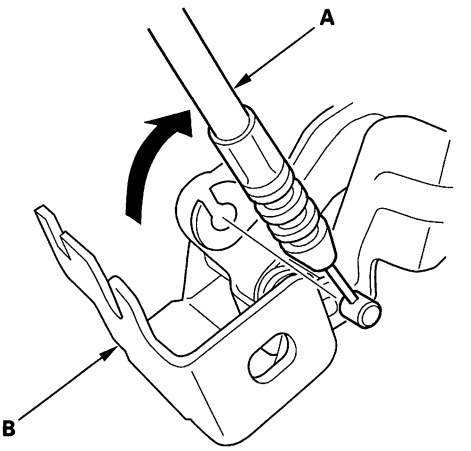


4. Install the opener in the reverse order of removal, and note these items:
   - Make sure the opener cable is connected properly.
   - Make sure the fuel fill door opens properly and locks securely.
   - Fix at the original position in the outer end of cable on the fuel fill door opener securely.



BACK

Protected by AR

## Hood Latch Replacement

1. Remove the front bumper (see page 20-146).

2. Detach the clips, then remove the hood lock cover (A).

**Fastener Locations**

▷ : Clip, 2

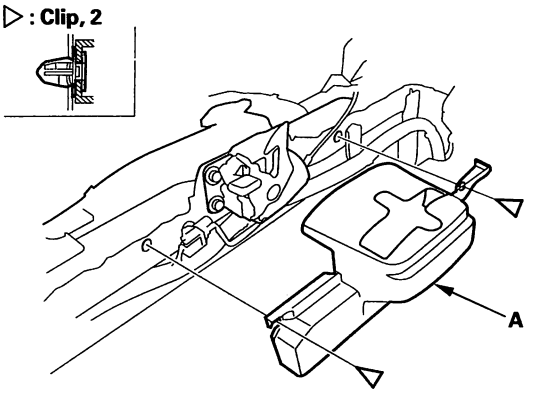


3. Disconnect and detach the hood latch switch connector (A).

**Fastener Locations**

▶ : Bolt, 3

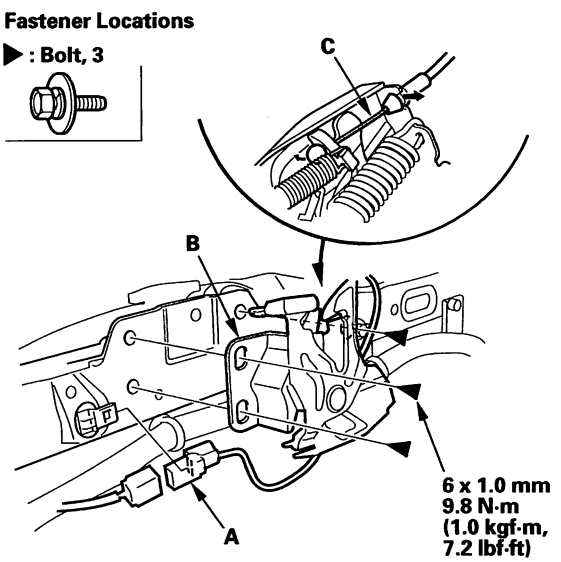


4. Remove the bolts, then remove the hood latch (B) from the body, and disconnect the hood opener cable (C) from the hood latch.

5. Install the latch in the reverse order of removal, and note these items:

   - Check if the clips are damaged or stress-whitened, and if necessary, replace them with new ones.
   - Apply multipurpose grease to each location of the hood latch indicated by the arrows.
   - Make sure the hood opener cable is connected properly and hood latch switch connector is plugged in properly.
   - Adjust the hood latch alignment (see step 4 on page 20-153).
   - Make sure the hood opens properly and locks securely.

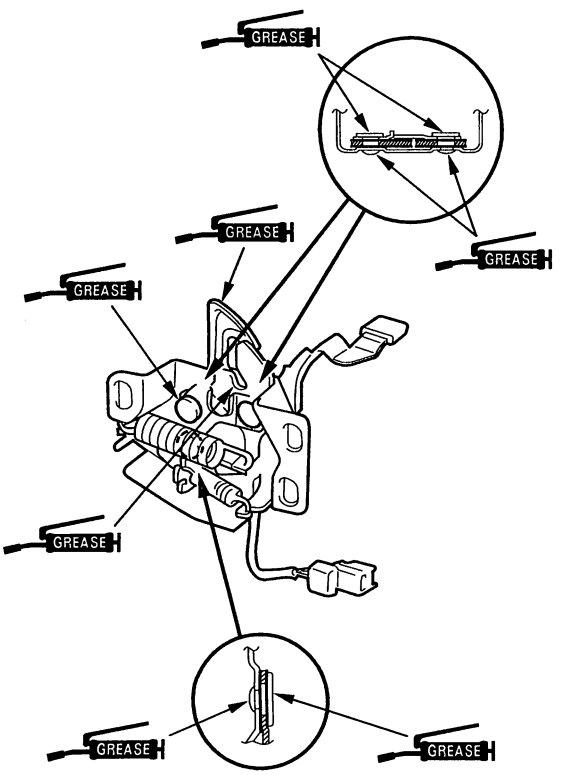

Protected by AR



## Hood Release Handle Replacement

1. Remove the kick panel (see step 3 on page 20-67).

2. Remove the bolt, then remove the hood release handle (A) from the body.

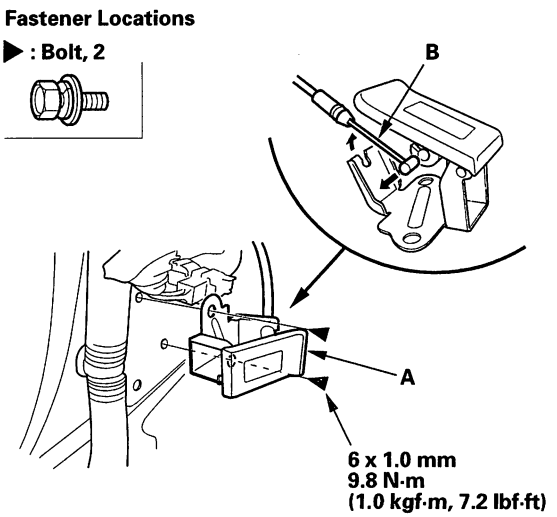


3. Disconnect the hood opener cable (B) from the hood release handle. Take care not to kink the cable.

4. Install the hood release handle in the reverse order of removal, and note these items:

   - Make sure the hood opener cable is connected properly.
   - Make sure the hood opens properly.

## Tailgate Latch Replacement

NOTE:
- Put on gloves to protect your hands.
- If the tailgate latch doesn't open by pulling the tailgate handle or using the keyless entry transmitter, remove the maintenance lid (A) from the tailgate lower trim panel, then turn the emergency lever (B) clockwise as shown.

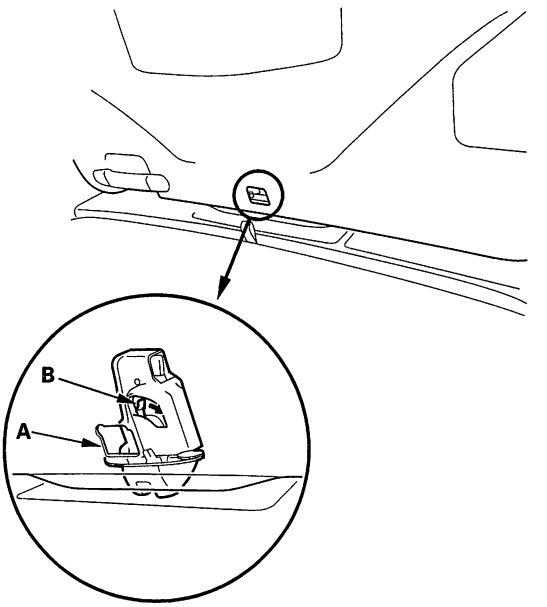




BACK

Protected by AR

1. Remove the tailgate lower trim panel (see step 4 on page 20-81).

2. Disconnect the actuator connector (A) and latch switch connector (B), then remove the bolts.

**Fastener Locations**

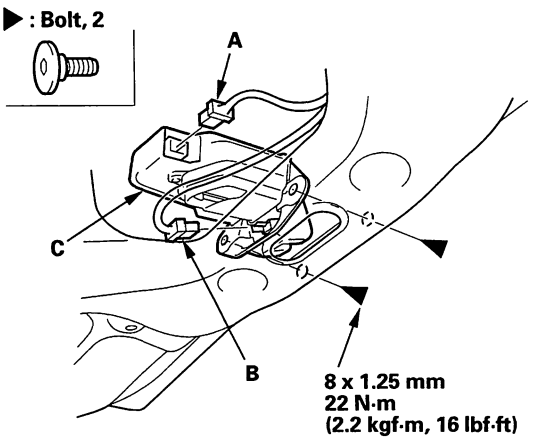


3. Pull the tailgate latch (C) out, then remove the latch.

4. Install the latch in the reverse order of removal, and note these items:

   - Make sure the connectors are plugged in properly.
   - Make sure the tailgate opens properly and locks securely.

Protected by AR



## Rear Damper Gusset Replacement

NOTE: Take care not to scratch the body.

1. Remove these items:
   - Cargo area side trim panel (see page 20-76)
   - Floor side spacer (see page 20-79)
2. Remove the bolts (A) and nuts (B), then remove the rear damper gusset (C).

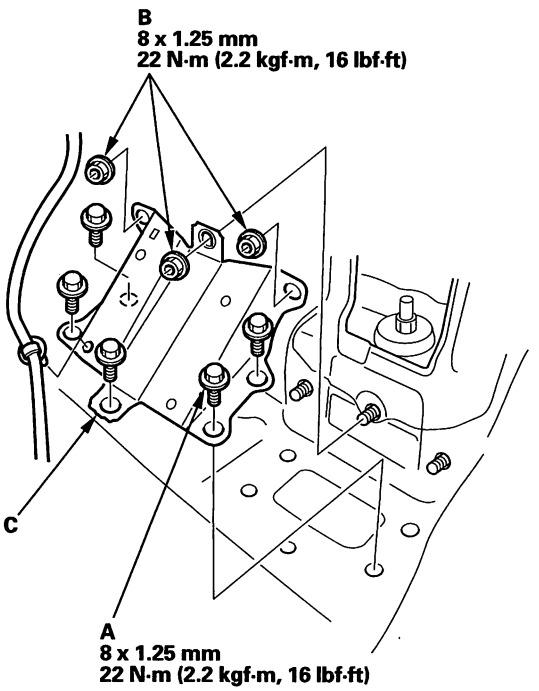


3. Install the gusset in the reverse order of removal.



BACK

Protected by AR

# Subframe Replacement

## Front Subframe Torque

- After loosening the subframe mounting bolts, be sure to replace them with new ones.
- When installing, align both installation reference holes in the subframe with both reference holes in the body using a screwdriver or tapered punch as a guide.

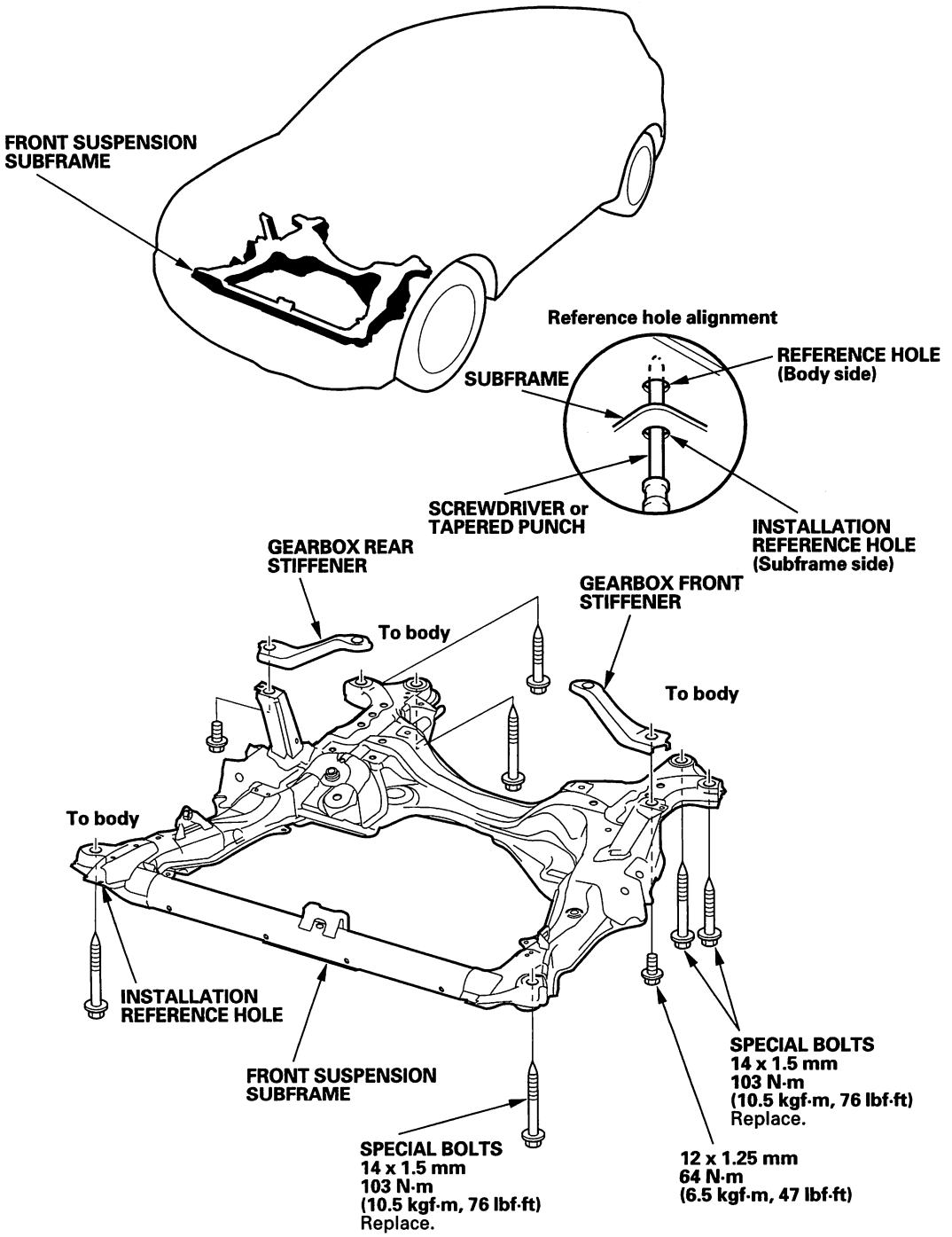


(cont'd)

Protected by AR



## Subframe Replacement (cont'd)

### Rear Subframe Torque

NOTE:
- After removing the subframe mounting bolts, be sure to replace them with new ones.
- When installing, align both installation reference holes in the subframe with the reference holes in the body using a screwdriver or tapered punch as a guide.

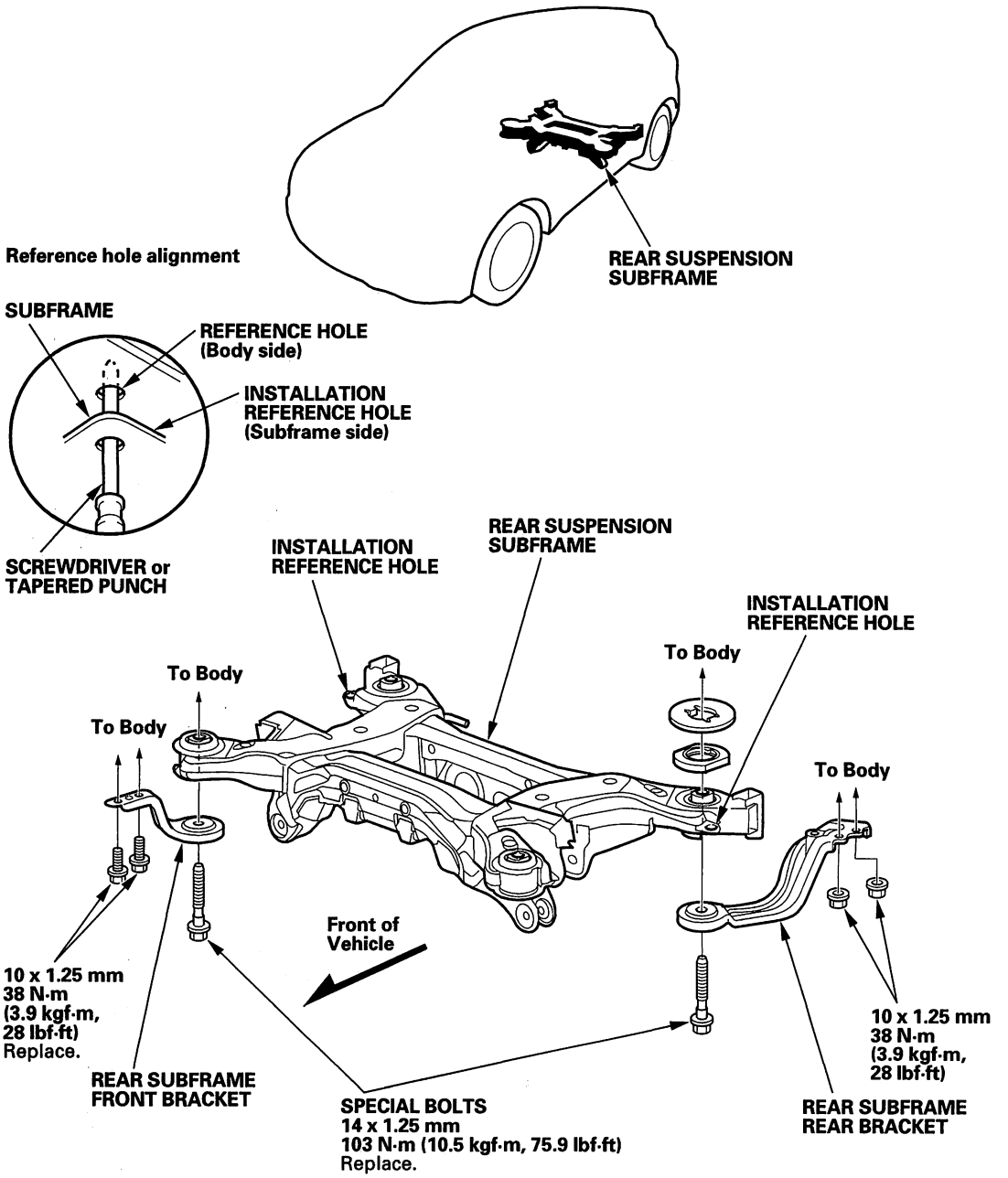




BACK

Protected by AR

Protected by AR



## Frame Repair Chart

### Top View

Unit: mm (in.)

ø: Inner diameter

- a1 For front subframe mount ø16 (0.63) forward
- a2 For front subframe mount ø14 (0.55) middle
- a3 For front subframe mount ø16 (0.63) rearward
- a4 For front subframe mount ø16 (0.63) center side
- b For engine side mount ø13 (0.51)
- c1 For transmission mount ø13 (0.51) forward of frame side
- c2 For transmission mount ø13 (0.51) rearward of frame side
- c3 For transmission mount ø11 (0.43) forward of wheelhouse side
- c4 For transmission mount ø11 (0.43) rearward of wheelhouse side

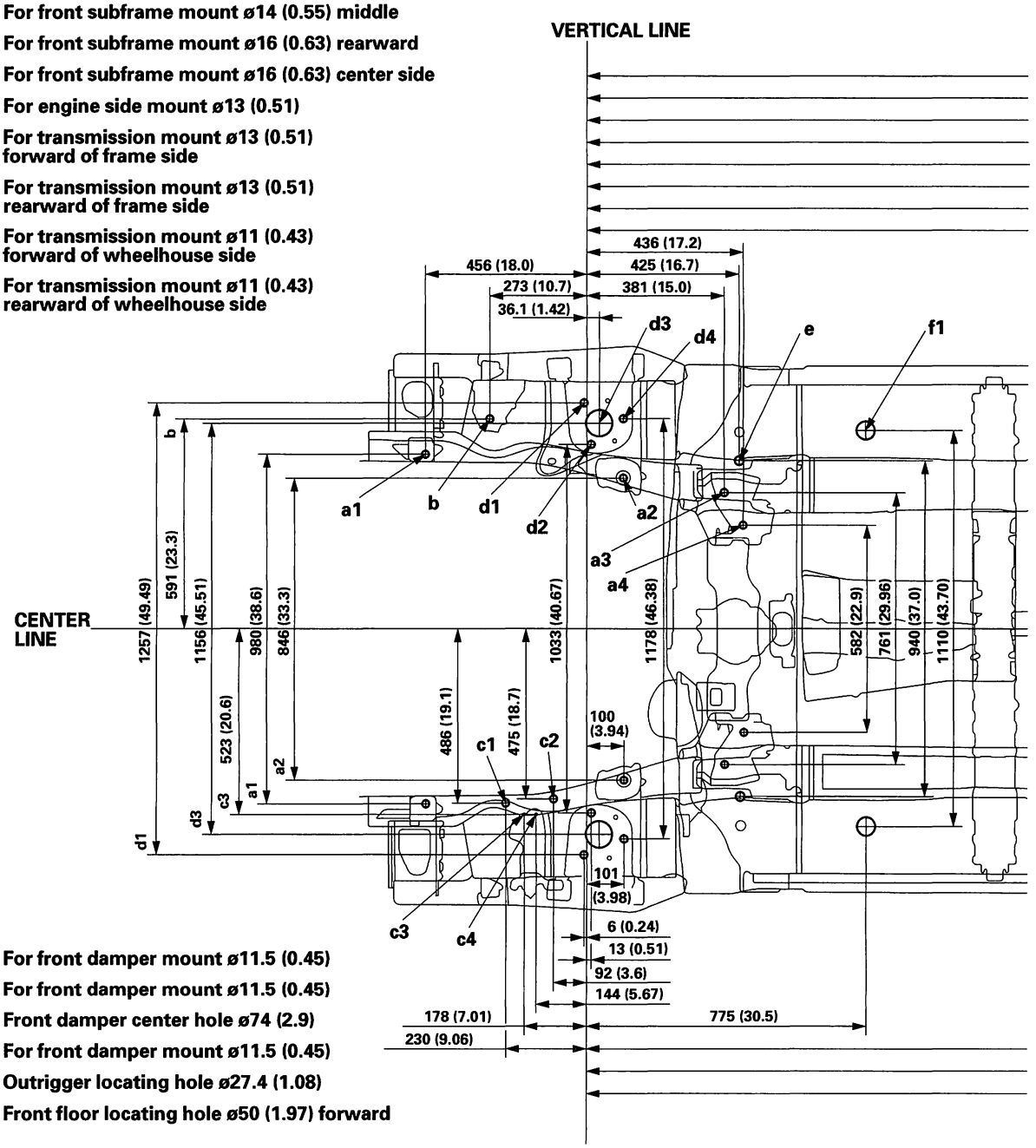


- d1 For front damper mount ø11.5 (0.45)
- d2 For front damper mount ø11.5 (0.45)
- d3 Front damper center hole ø74 (2.9)
- d4 For front damper mount ø11.5 (0.45)
- e Outrigger locating hole ø27.4 (1.08)
- f1 Front floor locating hole ø50 (1.97) forward



BACK

Protected by AR

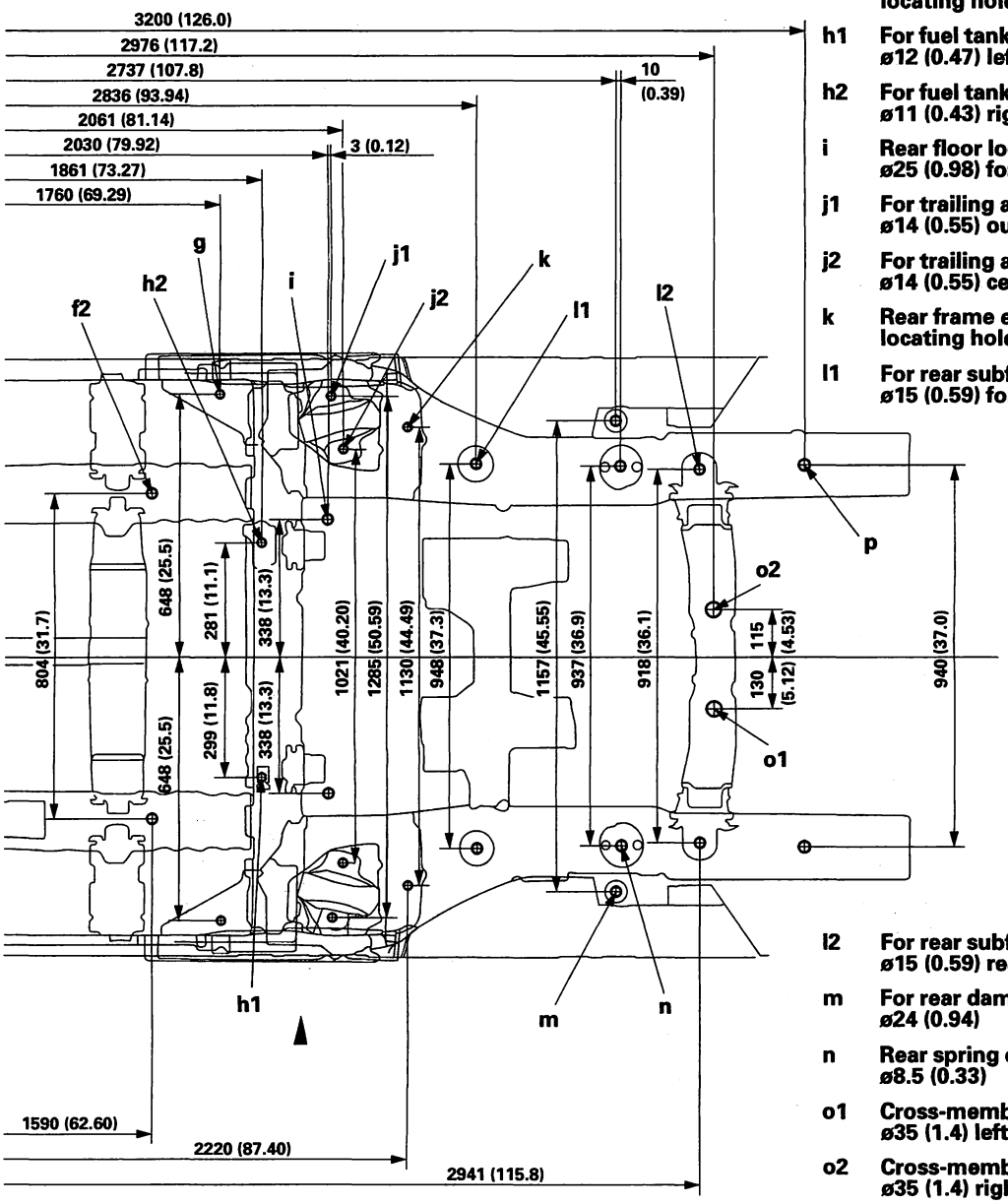


**f2** Front floor locating hole ø25 (0.98) rearward

**g** Side sill lower extension locating hole ø15 (0.59)

**h1** For fuel tank strap mount ø12 (0.47) left side

**h2** For fuel tank strap mount ø11 (0.43) right side

**i** Rear floor locating hole ø25 (0.98) forward

**j1** For trailing arm mount ø14 (0.55) outside

**j2** For trailing arm mount ø14 (0.55) center side

**k** Rear frame extension locating hole ø20 (0.79)

**l1** For rear subframe mount ø15 (0.59) forward

**l2** For rear subframe mount ø15 (0.59) rearward

**m** For rear damper mount ø24 (0.94)

**n** Rear spring center ø8.5 (0.33)

**o1** Cross-member locating hole ø35 (1.4) left side

**o2** Cross-member locating hole ø35 (1.4) right side

**p** Rear frame locating hole ø25 (0.98)

(cont'd)

Protected by AR



## Frame Repair Chart (cont'd)

### Side View

Unit: mm (in.)

ø: Inner diameter

| | |
|---|---|
| a1 | For front subframe mount ø16 (0.63) forward |
| a2 | For front subframe mount ø14 (0.55) middle |
| a3 | For front subframe mount ø16 (0.63) rearward |
| a4 | For front subframe mount ø16 (0.63) center side |
| b | For engine side mount ø13 (0.51) |
| c1 | For transmission mount ø13 (0.51) forward of frame side |
| c2 | For transmission mount ø13 (0.51) rearward of frame side |
| c3 | For transmission mount ø11 (0.43) forward of wheelhouse side |
| c4 | For transmission mount ø11 (0.43) rearward of wheelhouse side |

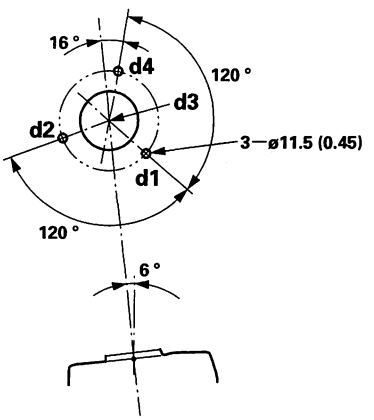


[ SECTION: AA ]

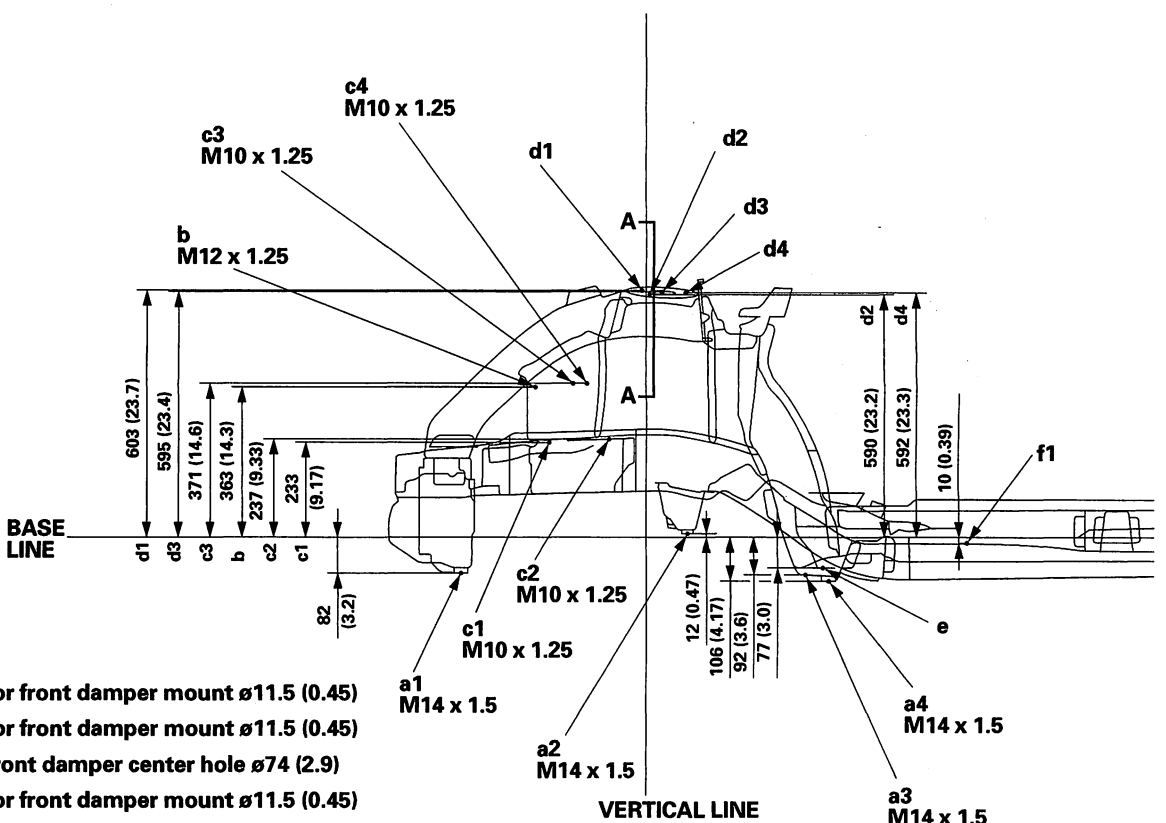


| | |
|---|---|
| d1 | For front damper mount ø11.5 (0.45) |
| d2 | For front damper mount ø11.5 (0.45) |
| d3 | Front damper center hole ø74 (2.9) |
| d4 | For front damper mount ø11.5 (0.45) |
| e | Outrigger locating hole ø27.4 (1.08) |
| f1 | Front floor locating hole ø50 (1.97) forward |



BACK

Protected by AR

| | |
|---|---|
| f2 | Front floor locating hole ø25 (0.98) rearward |
| g | Side sill lower extension locating hole ø15 (0.59) |
| h1 | For fuel tank strap mount ø12 (0.47) left side |
| h2 | For fuel tank strap mount ø11 (0.43) right side |
| i | Rear floor locating hole ø25 (0.98) forward |
| j1 | For trailing arm mount ø14 (0.55) outside |
| j2 | For trailing arm mount ø14 (0.55) center side |
| k | Rear frame extension locating hole ø20 (0.79) |
| l1 | For rear subframe mount ø15 (0.59) forward |
| l2 | For rear subframe mount ø15 (0.59) rearward |
| m | For rear damper mount ø24 (0.94) |
| n | Rear spring center ø8.5 (0.33) |
| o1 | Cross-member locating hole ø35 (1.4) left side |
| o2 | Cross-member locating hole ø35 (1.4) right side |
| p | Rear frame locating hole ø25 (0.98) |

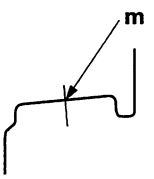


[ SECTION: BB ]

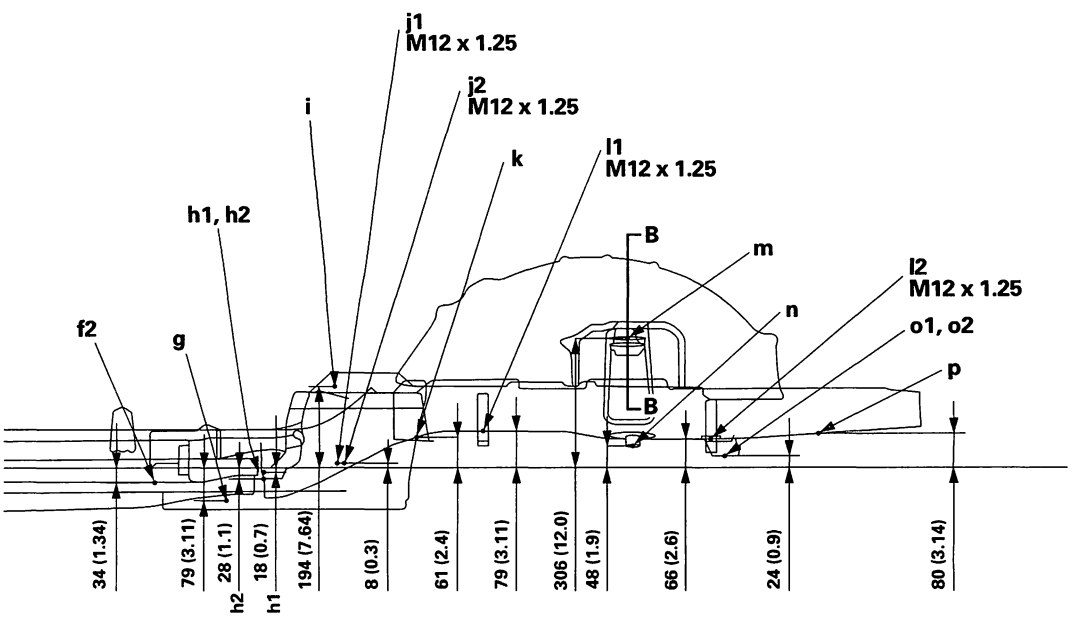

Protected by AR

## SUPPLEMENTAL RESTRAINT SYSTEM (SRS) (If HVAC maintenance is required)

The RDX SRS includes a driver's airbag in the steering wheel hub, a passenger's airbag in the dashboard above the glove box, seat belt tensioners in the front seat belt retractors, driver's seat belt buckle tensioner in the driver's seat belt lower anchor, front passenger's seat belt buckle tensioners in the front passenger's seat belt lower anchor, side curtain airbags in the sides of the roof, and side airbags in the front seat-backs. Information necessary to safely service the SRS is included in this Service Manual. Items marked with an asterisk ( * ) on the contents page include or are located near SRS components. Servicing, disassembling, or replacing these items require special precautions and tools, and should be done only by an authorized Acura dealer.

- To avoid rendering the SRS inoperative, which could lead to personal injury or death in the event of a severe frontal or side collision, all SRS service work must be performed by an authorized Acura dealer.
- Improper service procedures, including incorrect removal and installation of the SRS, could lead to personal injury caused by unintentional deployment of the airbags and/or side airbags.
- Do not bump or impact the SRS unit, front impact sensors, or side impact sensors when the ignition switch is ON (II), or for at least 3 minutes after the ignition switch is turned OFF; otherwise, the system may fail in a collision, or the airbags may deploy.
- SRS electrical connectors are identified by yellow color coding. Related components are located in the steering column, front console, dashboard, dashboard lower panel, in the dashboard above the glove box, in the front seats, in the roof side, and around the floor. Do not use electrical test equipment on these circuits.

BACK

Protected by AR

# HVAC (Heating, Ventilation, and Air Conditioning)


## HVAC (Heating, Ventilation, and Air Conditioning)

Special Tools ..... 21-2

## Climate Control

Component Location Index ..... 21-3
A/C Service Tips and Precautions ..... 21-6
A/C Refrigerant Oil Replacement ..... 21-6
A/C Line Replacement ..... 21-7
General Troubleshooting Information ..... 21-8
DTC Troubleshooting Index ..... 21-14
Symptom Troubleshooting Index ..... 21-15
System Description ..... 21-16
Circuit Diagram ..... 21-24
DTC Troubleshooting ..... 21-26
Recirculation Control Motor Circuit Troubleshooting ..... 21-55
Climate Control Power and Ground Circuit Troubleshooting ..... 21-57
Navigation Communication Line Circuit Troubleshooting ..... 21-58
Audio Communication Line Circuit Troubleshooting ..... 21-60
Climate Control Switch Communication Line Circuit Troubleshooting ..... 21-61
Radiator and A/C Condenser Fan Low Speed Circuit Troubleshooting ..... 21-65
A/C Condenser Fan High Speed Circuit Troubleshooting ..... 21-70
A/C Compressor Clutch Circuit Troubleshooting ..... 21-73
A/C Signal Circuit Troubleshooting ..... 21-76
In-car Temperature Sensor Test ..... 21-78
In-car Temperature Sensor Replacement ..... 21-78
Outside Air Temperature Sensor Test ..... 21-79
Outside Air Temperature Sensor Replacement ..... 21-79
Sunlight Sensor Test ..... 21-80
Sunlight Sensor Replacement ..... 21-80
Evaporator Temperature Sensor Test ..... 21-81
Power Transistor Replacement ..... 21-81
Power Transistor Test ..... 21-82
Driver's Air Mix Control Motor Test ..... 21-83
Driver's Air Mix Control Motor Replacement ..... 21-83
Passenger's Air Mix Control Motor Test ..... 21-84
Passenger's Air Mix Control Motor Replacement ..... 21-85
Mode Control Motor Test ..... 21-85
Mode Control Motor Replacement ..... 21-86
Recirculation Control Motor Test ..... 21-86
Recirculation Control Motor Replacement ..... 21-87
Dust and Pollen Filter Replacement ..... 21-87
Climate Control Unit Removal and Installation ..... 21-88
Climate Control Switch Removal and Installation ..... 21-88
Climate Control Switch Bulb Replacement ..... 21-89
Blower Unit Removal and Installation ..... 21-90
Blower Unit Component Replacement ..... 21-91
Evaporator Core Replacement ..... 21-92
* Heater Unit/Core Replacement ..... 21-94
Heater Valve Cable Adjustment ..... 21-97
A/C Compressor Replacement ..... 21-98
A/C Compressor Clutch Check ..... 21-100
A/C Compressor Clutch Overhaul ..... 21-101
A/C Compressor Thermal Protector Replacement ..... 21-102
A/C Compressor Relief Valve Replacement ..... 21-102
A/C Condenser Replacement ..... 21-103
Receiver/Dryer Desiccant Replacement ... 21-104
Refrigerant Recovery ..... 21-105
System Evacuation ..... 21-106
System Charging ..... 21-107
Refrigerant Leak Test ..... 21-108
A/C System Test ..... 21-109

Protected by AR



## Special Tools

| Ref. No. | Tool Number | Description | Qty |
|---|---|---|---|
| ① | 07SAZ-001000A | Backprobe Set | 2 |

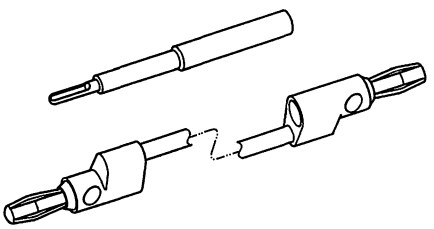

①



BACK

Protected by AR



## Component Location Index

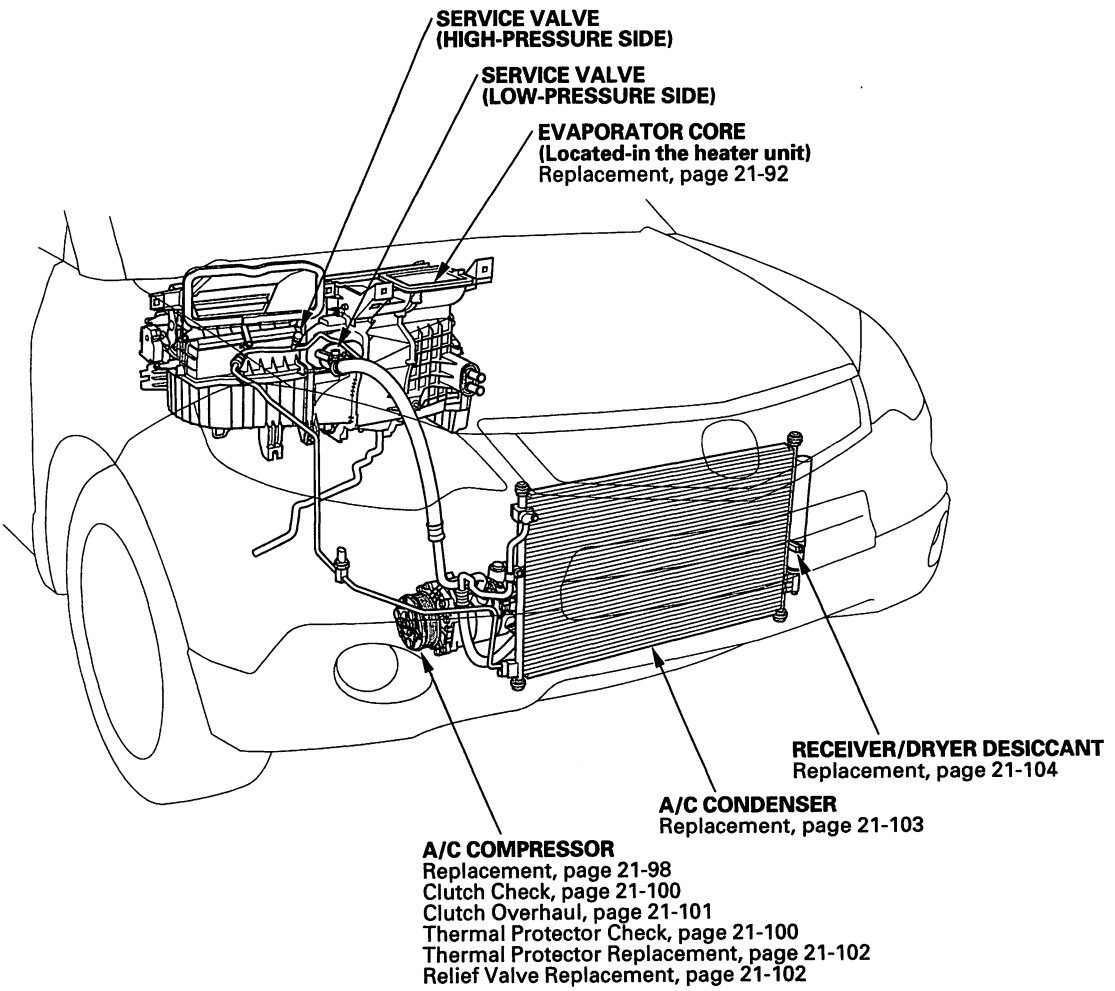


(cont'd)

Protected by AR



## Component Location Index (cont'd)

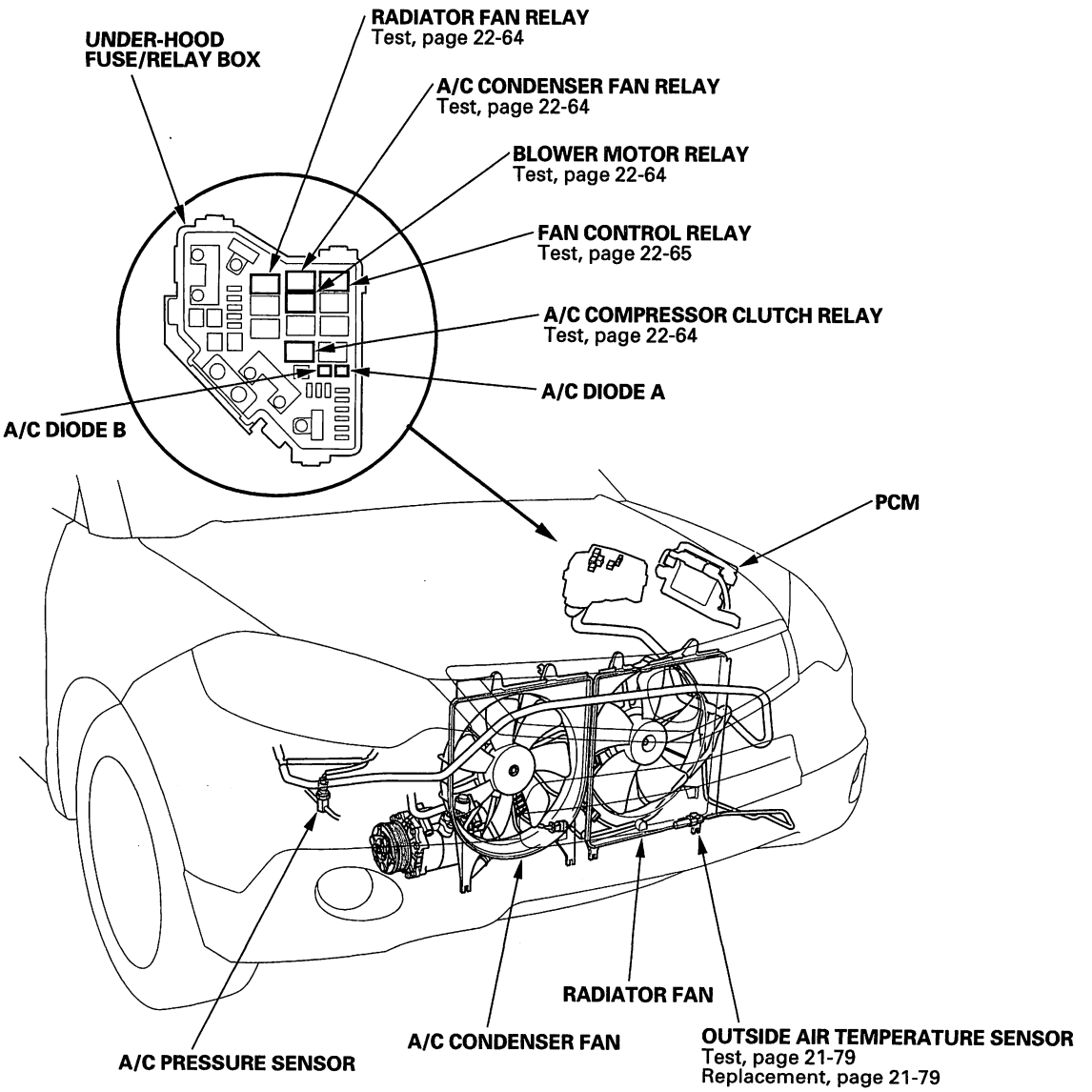




BACK

Protected by AR

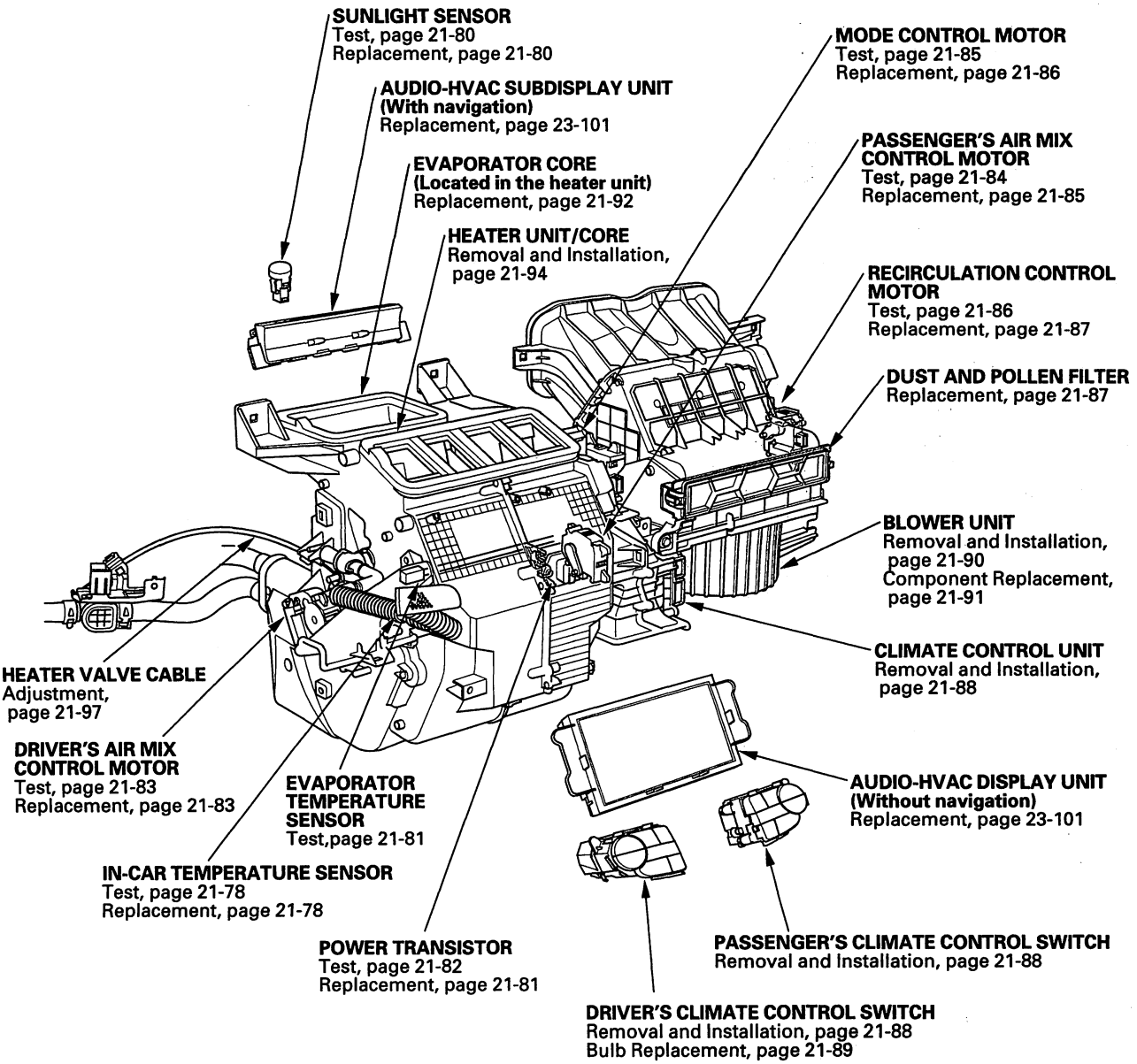


BACK

Protected by AR



## A/C Service Tips and Precautions

**⚠ WARNING**

- Compressed air mixed with the R-134a forms a combustible vapor.
- The vapor can burn or explode causing serious injury.
- Never use compressed air to pressure test R-134a service equipment or vehicle air conditioning systems.

**⚠ CAUTION**

- Air conditioning refrigerant or lubricant vapor can irritate your eyes, nose, or throat.
- Be careful when connecting service equipment.
- Do not breathe refrigerant or vapor.

The air conditioning system uses HFC-134a (R-134a) refrigerant and polyalkyleneglycol (PAG) refrigerant oil, which are not compatible with CFC-12 (R-12) refrigerant and mineral oil. Do not use R-12 refrigerant or mineral oil in this system, and do not attempt to use R-12 servicing equipment; damage to the air conditioning system or your servicing equipment will result.
Use only service equipment that is U.L.-listed and is certified to meet the requirements of SAE J2210 to remove R-134a from the air conditioning system.

If accidental system discharge occurs, ventilate the work area before resuming service.

R-134a service equipment or vehicle air conditioning systems should not be pressure tested or leak tested with compressed air.

Additional health and safety information may be obtained from the refrigerant and lubricant manufacturers.

- Always disconnect the negative cable from the battery whenever replacing air conditioning parts.
- Keep moisture and dirt out of the system. When disconnecting any lines, plug or cap the fittings immediately; don't remove the caps or plugs until just before you reconnect each line.
- Before connecting any hose or line, apply a few drops of refrigerant oil to the O-ring.
- When tightening or loosening a fitting, use a second wrench to support the matching fitting.
- When discharging the system, use an R-134a refrigerant recovery/recycling/charging station; don't release refrigerant into the atmosphere.

## A/C Refrigerant Oil Replacement

Recommended PAG oil: SP-10

- P/N 38897-P13-A01AH: 120 mL (4 fl·oz)
- P/N 38899-P13-A01: 40 mL (1 1/3 fl·oz)

Add the recommended refrigerant oil in the amount listed if you replace any of the following parts.

- To avoid contamination, do not return the oil to the container once dispensed, and never mix it with other refrigerant oils.
- Immediately after using the oil, reinstall the cap on the container, and seal it to avoid moisture absorption.
- Do not spill the refrigerant oil on the vehicle; it may damage the paint; if it gets on the paint, wash it off immediately.

A/C condenser
(including Dryer
Desiccant) .....50 mL (1 2/3 fl·oz)
Evaporator .....40 mL (1 1/3 fl·oz)
Line or hose .....10 mL (1/3 fl·oz)
Receiver/Dryer
Desiccant .....10 mL (1/3 fl·oz)
Leakage repair .....25 mL (5/6 fl·oz)
A/C compressor .....Since the oil separator is equipped inside the compressor for this vehicle, oil drainage is unnecessary at the time of compressor replacement.



BACK

Protected by AR

## A/C Line Replacement

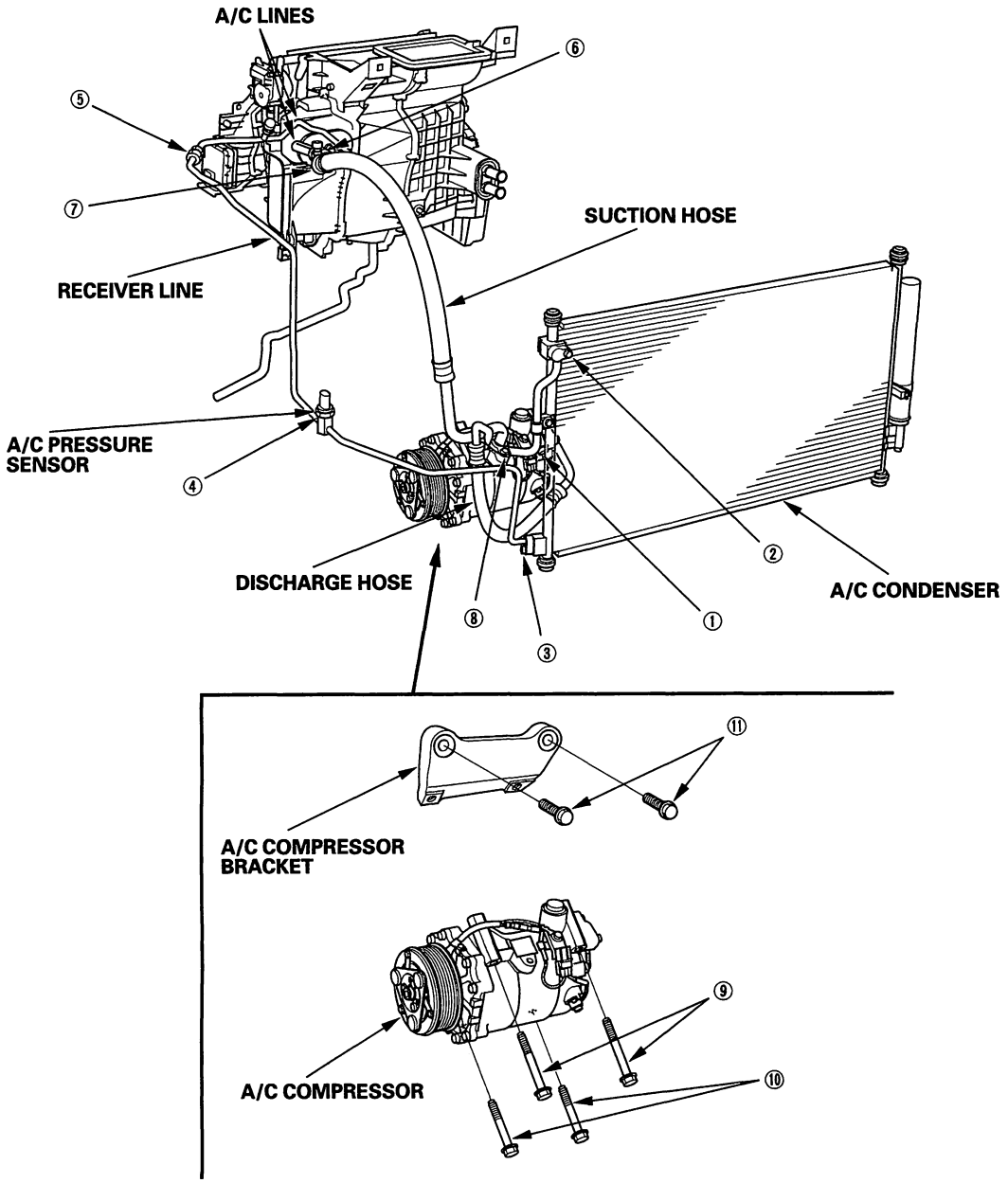


① Discharge hose to the A/C compressor (6 x 1.0 mm): 9.8 N·m (1.0 kgf·m, 7.2 lbf·ft)
② Discharge hose to the A/C condenser (6 x 1.0 mm): 9.8 N·m (1.0 kgf·m, 7.2 lbf·ft)
③ Receiver line to the A/C condenser (6 x 1.0 mm): 9.8 N·m (1.0 kgf·m, 7.2 lbf·ft)
④ A/C pressure sensor to receiver line (11 x 1.0 mm): 11.3 N·m (1.2 kgf·m, 8.3 lbf·ft)
⑤ Receiver line to the A/C line (16 x 1.5 mm): 13.3 N·m (1.4 kgf·m, 9.8 lbf·ft)
⑥ A/C lines to the evaporator (6 x 1.0 mm): 9.8 N·m (1.0 kgf·m, 7.2 lbf·ft)
⑦ A/C line to the suction hose (24 x 1.5 mm): 31.9 N·m (3.2 kgf·m, 23.5 lbf·ft)
⑧ Suction hose to the A/C compressor (6 x 1.0 mm): 9.8 N·m (1.0 kgf·m, 7.2 lbf·ft)
⑨ A/C compressor to the water passage (8 x 1.25 mm): 22 N·m (2.2 kgf·m, 16 lbf·ft)
⑩ A/C compressor to the A/C compressor bracket (10 x 1.25 mm): 45 N·m (4.5 kgf·m, 32.5 lbf·ft)
⑪ A/C compressor bracket to the engine block (8 x 1.25 mm): 24 N·m (2.4 kgf·m, 17.7 lbf·ft)

BACK

Protected by AR



## General Troubleshooting Information

### How to Check for DTCs with the HDS

1. Make sure the ignition switch is OFF.
2. Connect the HDS to the data link connector (DLC) (A) located under the driver's side of the dashboard.

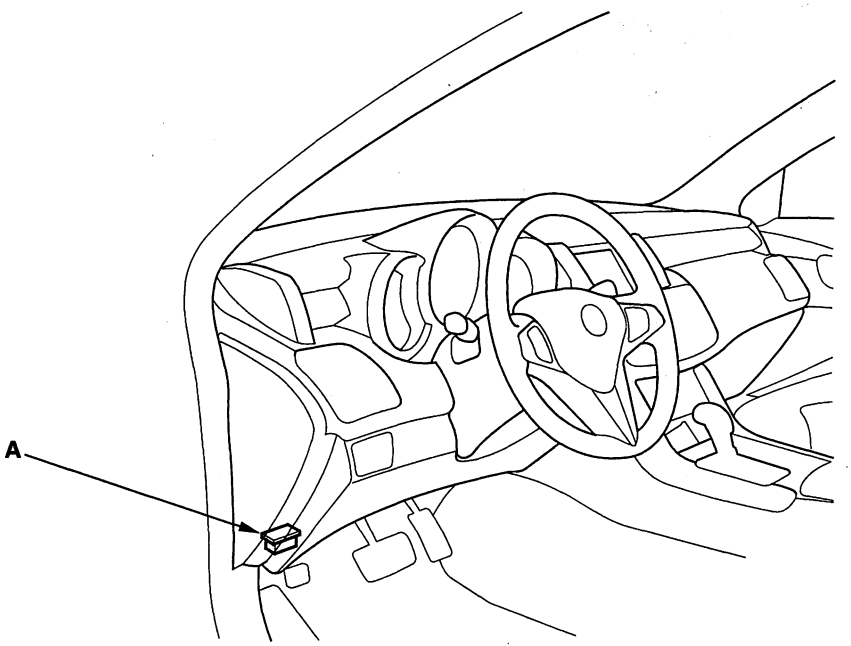


3. Turn the ignition switch ON (II).
4. Make sure the HDS communicates with the vehicle and the climate control unit. If it doesn't, troubleshoot the DLC circuit (see page 11-229).
5. Select HVAC/CLIMATE CONTROL in the BODY ELECTRICAL menu.
6. Select DTCs in the HVAC/CLIMATE CONTROL menu.
7. Check for DTCs. If any DTCs are indicated, write down the DTCs, then go to the indicated DTC troubleshooting. If no DTCs are indicated, refer to symptom troubleshooting.

   NOTE:
   - After troubleshooting, clear the DTCs with the HDS.
   - For specific operations, refer to the user's manual that came with the HDS.



BACK

Protected by AR

## How to Use the Self-diagnostic Function with the HDS

1. Make sure the ignition switch is OFF.
2. Connect the HDS to the data link connector (DLC).
3. Turn the ignition switch ON (II).
4. Make sure the HDS communicates with the vehicle and the climate control unit. If it doesn't, troubleshoot the DLC circuit (see page 11-229).
5. Select HVAC/CLIMATE CONTROL in the BODY ELECTRICAL menu.
6. Select INSPECTION in the HVAC/CLIMATE CONTROL menu.
7. Select CLIMATE CONTROL SELF TEST in the INSPECTION menu.
8. Check for DTCs. If any DTCs are indicated, write down the DTCs, then go to the indicated DTC troubleshooting.

   NOTE:
   - After troubleshooting, clear the DTCs with the HDS.
   - For specific operations, refer to the user's manual that came with the HDS.

(cont'd)

Protected by AR



## General Troubleshooting Information (cont'd)

### How to Use the Self-diagnostic Function without the HDS

The climate control unit has a self-diagnostic function. To run the self-diagnostic function, do the following:

1. Turn the ignition switch ON (II).

2. Press and hold the OFF button.

3. While holding the OFF button, press the rear window defogger/mirror defogger button five times within 10 seconds. Release the buttons and the self-diagnostic function will begin.

   NOTE:
   - It may take up to 20 seconds for the self-diagnostic to begin.
   - The blower motor can be run at various speeds regardless of what the panel is displaying.
   - If there is any problem in the system, the driver's temperature indicator will light up the segment (A through P) and AUTO indicator corresponding to the error. The temperature indicator will then alternate every second between displaying "88" (all segments lit) and the error code segment (A through P) and AUTO indicator. To determine the meaning of the DTC, refer to checking for DTCs.
   - If there are no problems detected, the segments will not illuminate, and the system will appear to be turned off.

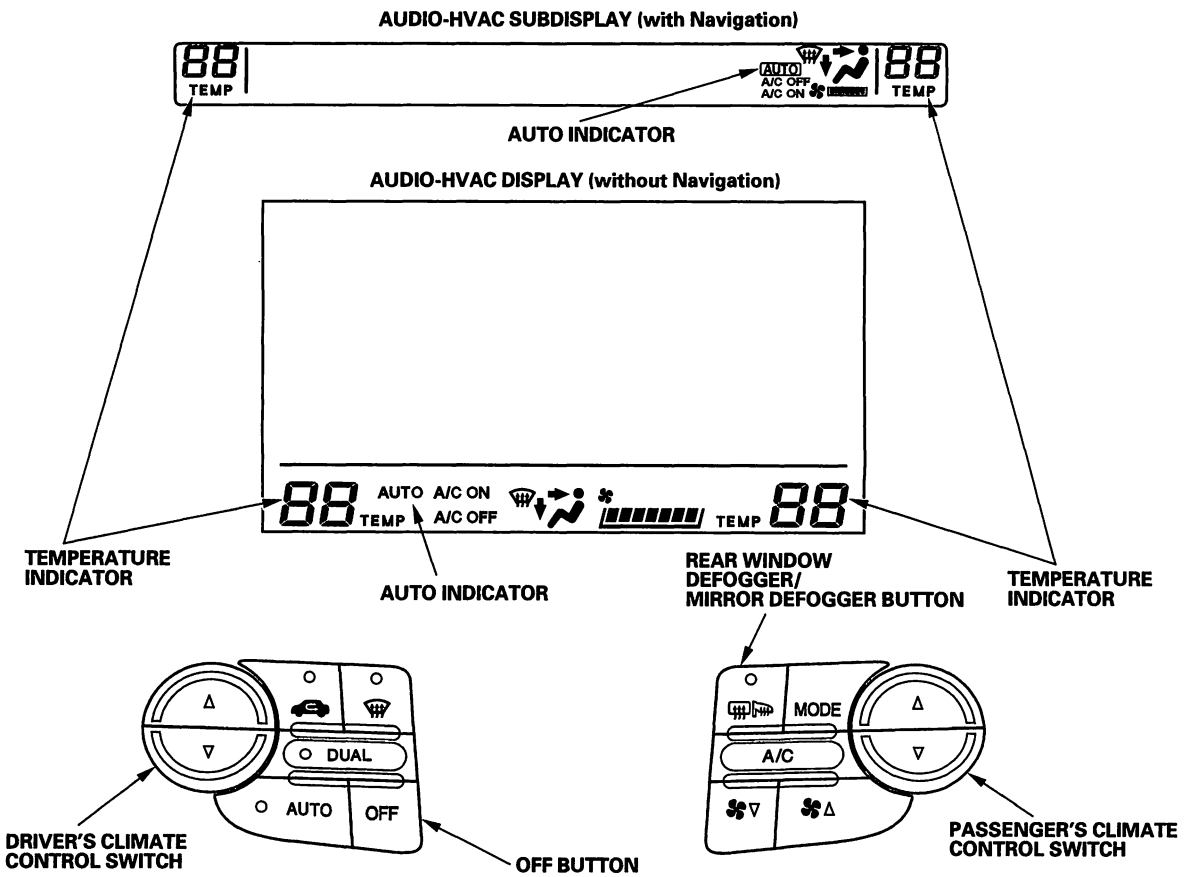


**Canceling the Self-diagnostic Function**

4. Turn the ignition switch OFF to cancel the self-diagnostic function. After completing repair work, run the self-diagnostic function again to make sure that there are no other DTCs.



BACK

Protected by AR

## Checking for DTCs

The temperature display indicates single or multiple DTCs. If indicator segments A, C, E and G are on at the same time, there may be an open in the common ground wire. If no DTCs are present, the indicator remains blank.

**DRIVER'S TEMPERATURE INDICATOR**

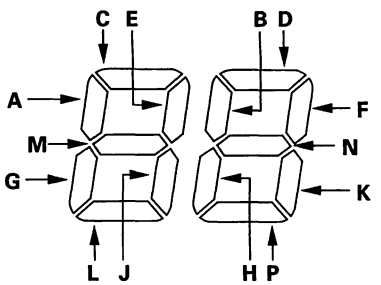


**AUTO INDICATOR**

AUTO

| DTC (Driver's Temperature Indicator Segment and AUTO Indicator) | Detection Item |
|---|---|
| A and AUTO | An open in the in-car temperature sensor circuit (see page 21-29) |
| B and AUTO | A short in the in-car temperature sensor circuit (see page 21-31) |
| C and AUTO | An open in the outside air temperature sensor circuit (see page 21-32) |
| D and AUTO | A short in the outside air temperature sensor circuit (see page 21-33) |
| E and AUTO | An open in the sunlight sensor circuit (see page 21-34) |
| F and AUTO | A short in the sunlight sensor circuit (see page 21-35) |
| G and AUTO | An open in the evaporator temperature sensor circuit (see page 21-36) |
| H and AUTO | A short in the evaporator temperature sensor circuit (see page 21-38) |
| J and AUTO | An open in the driver's air mix control motor circuit (see page 21-39) |
| K and AUTO | A short in the driver's air mix control motor circuit (see page 21-40) |
| L and AUTO | A problem in the driver's air mix control linkage, door, or motor (see page 21-41) |
| M and AUTO | A open in the passenger's air mix control motor circuit (see page 21-43) |
| N and AUTO | A short in the passenger's air mix control motor circuit (see page 21-44) |
| P and AUTO | A problem in the passenger's air mix control linkage, door, or motor (see page 21-45) |
| A | An open or short in the mode control motor circuit (see page 21-47) |
| B | A problem in the mode control linkage, doors, or motor (see page 21-49) |
| F | A problem in the blower motor circuit (see page 21-51) |
| G | Climate control unit internal error (see page 21-26) |
| H | Climate control unit lost communication with gauge control module (VSP/NE message) (see page 21-26) |
| J | Climate control unit lost communication with gauge control module (ILLMI message) (see page 21-28) |
| K | Climate control unit lost communication with gauge control module (ECT message) (see page 21-27) |
| M | Communication bus line error (bus-off) (see page 22-99) |

(cont'd)

Protected by AR



## General Troubleshooting Information (cont'd)

### Displaying Sensor Inputs at the Climate Control Unit

The climate control unit has a mode that displays sensor inputs it receives. This mode shows you what the climate control unit is receiving from each of the sensors, one at a time, and it can help you determine if a sensor is faulty.

**Check these items before using the sensor input display mode**

1. Turn the ignition switch ON (II), and check the recirculation door function; press the recirculation button to switch from FRESH to RECIRC. The air volume and sound should change slightly.

2. Set the temperature control knob to the desired test temperature. When selecting the test temperature, note these items:
   - "Lo" temperature setting will default to MAX COOL, VENT, and RECIRC.
   - "Hi" temperature setting will default to MAX HOT, FLOOR, and FRESH.
   - 58 through 86 ℉ settings will use the automatic climate control logic.

3. Turn the ignition switch OFF.

**To run the sensor input display mode, follow these steps**

1. Turn the ignition switch OFF.

2. Press and hold both the AUTO and REC buttons, then start the engine.

3. After the engine starts, release the buttons. The audio-HVAC display panel will flash the sensor number and then the value for that sensor. Record the value displayed.

4. To advance to the next sensor, press the rear window defogger button.

| Sensor | Item | Displayed Value |
|---|---|---|
| 1 | Mode Positioning | BIT |
| 2 | In-car Temperature | ℃ |
| 3 | Outside Air Temperature | ℃ |
| 4 | Solar Radiation Sensor Value: Dark = 00, Flashlight = 04, Cloudy = 10, Sunny = 65 | 10 kcal/m$^2$·h |
| 5 | Evaporator Temperature | ℃ |
| 6 | Driver's Air Mix Opening (Low value indicates cooler air distribution, higher value indicates warmer air distribution) | % of opening |
| 7 | Passenger's Air Mix Opening (Low value indicates cooler air distribution, higher value indicates warmer air distribution) | % of opening |
| 8 | Recirculation Opening | % of opening |
| 9 | Vehicle Speed (Vehicle must be driven to display speed) | 10 km/h |
| A | Engine Coolant Temperature | ℃ |
| B | Vent Temperature Air Out (TAO) | ℃ |

NOTE:
- The sensor values will be displayed in degrees Celsius (℃) or an alphanumeric code. Use the chart to convert the value to degrees Fahrenheit (℉).
- If the sensor value displays "Er", this indicates there is an open or short in the circuit or sensor. Check for DTCs using the HDS, or refer to checking DTCs by DTC indication.
- If necessary, compare the sensor input display to a known-good vehicle under the same test conditions.
- If the sensor is out of the normal range, refer to the sensor test or substitute with a known-good sensor, and recheck.

5. To cancel the sensor input display mode, press the AUTO button or turn the ignition switch off.



BACK

Protected by AR

**Celsius to Fahrenheit Conversion Table**

| ℃ | ℉ | ℃ | ℉ | ℃ | ℉ | ℃ | ℉ | ℃ | ℉ |
|---|---|---|---|---|---|---|---|---|---|
| 0 | 32 | 10 | 50 | 20 | 68 | 30 | 86 | 40 | 104 |
| 1 | 34 | 11 | 52 | 21 | 70 | 31 | 88 | 41 | 106 |
| 2 | 36 | 12 | 54 | 22 | 72 | 32 | 90 | 42 | 108 |
| 3 | 37 | 13 | 55 | 23 | 73 | 33 | 91 | 43 | 109 |
| 4 | 39 | 14 | 57 | 24 | 75 | 34 | 93 | 44 | 111 |
| 5 | 41 | 15 | 59 | 25 | 77 | 35 | 95 | 45 | 113 |
| 6 | 43 | 16 | 61 | 26 | 79 | 36 | 97 | 46 | 115 |
| 7 | 45 | 17 | 63 | 27 | 81 | 37 | 99 | 47 | 117 |
| 8 | 46 | 18 | 64 | 28 | 82 | 38 | 100 | 48 | 118 |
| 9 | 48 | 19 | 66 | 29 | 84 | 39 | 102 | 49 | 120 |

| ℃ | ℉ | ℃ | ℉ | ℃ | ℉ | ℃ | ℉ | ℃ | ℉ |
|---|---|---|---|---|---|---|---|---|---|
| 50 | 122 | 60 | 140 | 70 | 158 | 80 | 176 | 90 | 194 |
| 51 | 124 | 61 | 142 | 71 | 160 | 81 | 178 | 91 | 196 |
| 52 | 126 | 62 | 144 | 72 | 162 | 82 | 180 | 92 | 198 |
| 53 | 127 | 63 | 145 | 73 | 163 | 83 | 181 | 93 | 199 |
| 54 | 128 | 64 | 147 | 74 | 165 | 84 | 183 | 94 | 201 |
| 55 | 131 | 65 | 149 | 75 | 167 | 85 | 185 | 95 | 203 |
| 56 | 133 | 66 | 151 | 76 | 169 | 86 | 187 | 96 | 205 |
| 57 | 135 | 67 | 152 | 77 | 170 | 87 | 188 | 97 | 207 |
| 58 | 136 | 68 | 154 | 78 | 172 | 88 | 190 | 98 | 208 |
| 59 | 139 | 69 | 158 | 79 | 174 | 89 | 192 | 99 | 210 |

**Alphanumeric Conversion Table**

| Display Reading (Alphanumeric) | ℃ | ℉ | % |
|---|---|---|---|
| A1 thru A9 | −1 thru −9 | 30 thru 16 | −1 thru −9 |
| B0 thru B9 | −10 thru −19 | 14 thru −2 | −10 thru −19 |
| C0 thru C9 | −20 thru −29 | −4 thru −20 | −20 thru −29 |
| D0 thru D9 | −30 thru −39 | −22 thru −38 | −30 thru −39 |
| E0 thru E9 | −40 thru −49 | −40 thru −58 | −40 thru −49 |
| F0 thru F9 | ——— | ——— | +100 thru +109 |

**Alphanumeric Conversion Table (Mode Positioning)**

| Display Reading (Alphanumeric) | Mode Position |
|---|---|
| 01 | OVER VENT |
| 02 | VENT |
| 03 | VENT-HEAT/VENT |
| 04 | HEAT/VENT |
| 05 | HEAT/VENT-HEAT |
| 06 | HEAT |
| 07 | HEAT-HEAT/DEF |
| 08 | HEAT/DEF |
| 09 | HEAT/DEF-DEF |
| 10 | DEF |
| 11 | OVER DEF |

BACK

Protected by AR



## DTC Troubleshooting Index

**Checking the DTCs by HDS**

| DTC | Detection Item or Symptom | ECU | DTC type | Page |
|---|---|---|---|---|
| B1200 | Communication bus line error (bus-off) | Climate control unit | Loss of communication | (see page 22-99) |
| B1205 | Climate control unit lost communication with gauge control module (VSP/NE message) | Climate control unit | Loss of communication | (see page 21-26) |
| B1206 | Climate control unit lost communication with gauge control module (ECT message) | Climate control unit | Loss of communication | (see page 21-27) |
| B1207 | Climate control unit lost communication with gauge control module (ILLUMI message) | Climate control unit | Loss of communication | (see page 21-28) |
| B1225 | An open in the in-car temperature sensor circuit | Climate control unit | Signal error | (see page 21-29) |
| B1226 | A short in the in-car temperature sensor circuit | Climate control unit | Signal error | (see page 21-31) |
| B1227 | An open in the outside air temperature sensor circuit | Climate control unit | Signal error | (see page 21-32) |
| B1228 | A short in the outside air temperature sensor circuit | Climate control unit | Signal error | (see page 21-33) |
| B1229 | An open in the sunlight sensor circuit | Climate control unit | Signal error | (see page 21-34) |
| B1230 | A short in the sunlight sensor circuit | Climate control unit | Signal error | (see page 21-35) |
| B1231 | An open in the evaporator temperature sensor circuit | Climate control unit | Signal error | (see page 21-36) |
| B1232 | A short in the evaporator temperature sensor circuit | Climate control unit | Signal error | (see page 21-38) |
| B1233 | An open in the driver's air mix control motor circuit | Climate control unit | Signal error | (see page 21-39) |
| B1234 | A short in the driver's air mix control motor circuit | Climate control unit | Signal error | (see page 21-40) |
| B1235 | A problem in the driver's air mix control linkage, door, or motor | Climate control unit | Signal error | (see page 21-41) |
| B1236 | An open in the passenger's air mix control motor circuit | Climate control unit | Signal error | (see page 21-43) |
| B1237 | A short in the passenger's air mix control motor circuit | Climate control unit | Signal error | (see page 21-44) |
| B1238 | A problem in the passenger's air mix control linkage, door, or motor | Climate control unit | Signal error | (see page 21-45) |
| B1239 | An open or short in the mode control motor circuit | Climate control unit | Signal error | (see page 21-47) |
| B1240 | A problem in the mode control linkage, doors, or motor | Climate control unit | Signal error | (see page 21-49) |
| B1241 | A problem in the blower motor circuit | Climate control unit | Signal error | (see page 21-51) |



BACK

Protected by AR

## Symptom Troubleshooting Index

| Symptom | Diagnostic procedure | Also check for |
|---|---|---|
| Recirculation control doors do not change between Fresh and Recirculate | Recirculation control motor circuit troubleshooting (see page 21-55) | • HVAC DTCs (see page 21-8)<br>• Blown fuse No. 36 (10 A) in the under-dash fuse/relay box<br>• Cleanliness and tightness of all terminals |
| Blower, heater controls, and A/C do not work | Climate control power and ground circuit troubleshooting (see page 21-57) | • HVAC DTCs (see page 21-8)<br>• Blown fuse No. 36 (10 A) in the under-dash fuse/relay box<br>• Faulty blower motor relay<br>• Poor ground at G571 (see page 22-60)<br>• Cleanliness and tightness of all terminals |
| Voice communication does not work | Navigation communication line circuit troubleshooting (see page 21-58) | • HVAC DTCs (see page 21-8)<br>• Cleanliness and tightness of all terminals |
| HVAC display is not indicated | Audio communication line circuit troubleshooting (see page 21-60) | • HVAC DTCs (see page 21-8)<br>• Cleanliness and tightness of all terminals |
| Climate control switches do not work | Climate control switch communication line circuit troubleshooting (see page 21-61) | • HVAC DTCs (see page 21-8)<br>• Cleanliness and tightness of all terminals |
| Both fans do not run at low speed with the A/C on (but the A/C compressor runs with the A/C on) | Radiator and A/C condenser fan low speed circuit troubleshooting (see page 21-65) | • HVAC DTCs (see page 21-8)<br>• Blown fuse No. 7 (30 A) in the under-hood fuse/relay box, and No. 36 (10 A) in the under-dash fuse/relay box<br>• Poor ground at G201 (see page 22-60)<br>• Cleanliness and tightness of all terminals |
| The A/C condenser fan does not run at high speed (but both fans run at low speed and the A/C compressor operates with the A/C on) | A/C condenser fan high speed circuit troubleshooting (see page 21-70) | • HVAC DTCs (see page 21-8)<br>• Poor ground at G202 (see page 22-60)<br>• Cleanliness and tightness of all terminals |
| Both fans do not run at high speed with the A/C on (but both fans run at low speed and the A/C compressor operates with the A/C on) | A/C pressure sensor troubleshooting: A/C pressure sensor circuit low voltage (see page 11-327), A/C pressure sensor circuit high voltage (see page 11-329)<br>ECT troubleshooting: ECT sensor 2 circuit low voltage (see page 11-188), ECT sensor 2 circuit high voltage (see page 11-190) | • Powertrain DTCs (see page 11-3)<br>• Cleanliness and tightness of all terminals |
| The A/C compressor clutch does not engage (but both fans run with the A/C on) | A/C compressor clutch circuit troubleshooting (see page 21-73) | • HVAC DTCs (see page 21-8)<br>• Blown fuse No. 20 (7.5 A) in the under-hood fuse/relay box, and No. 36 (10 A) in the under-dash fuse/relay box<br>• Cleanliness and tightness of all terminals |
| A/C system does not come on (both fans and the A/C compressor do not work); heater is OK | A/C signal circuit troubleshooting (see page 21-76)<br>A/C pressure sensor troubleshooting: A/C pressure sensor circuit low voltage (see page 11-327), A/C pressure sensor circuit high voltage (see page 11-329) | • HVAC DTCs (see page 21-8)<br>• Powertrain DTCs (see page 11-3)<br>• Cleanliness and tightness of all terminals |
| HDS does not communicate with the climate control unit or the vehicle | Troubleshoot the DLC circuit (see page 11-229) | |

Protected by AR

# Climate Control

## System Description

The air conditioning system removes heat from the passenger compartment by transferring heat from the ambient air to the evaporator. The evaporator cools the air with the refrigerant that is circulating through the evaporator. The refrigerant expands in the evaporator, becoming very cold and absorbs the heat from the ambient air. The blower fan pushes air across the evaporator where the heat is absorbed, and then blows the cool air into the passenger compartment.

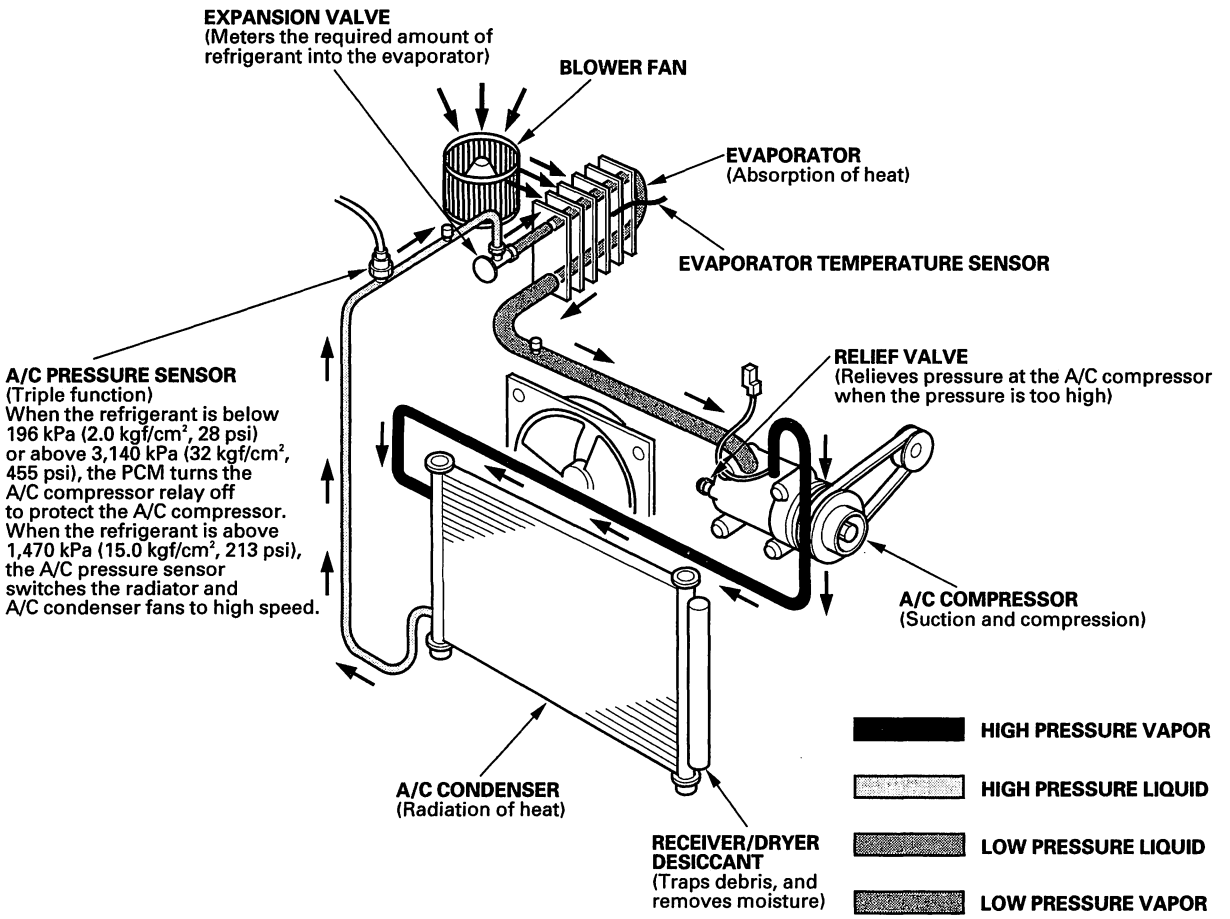


This vehicle uses HFC-134a (R-134a) refrigerant, which does not contain chlorofluorocarbons. Pay attention to the following service items:

- Do not mix refrigerants CFC-12 (R-12) and HFC-134a (R-134a). They are not compatible.
- Use only the recommended polyalkyleneglycol (PAG) refrigerant oil (SP-10) designed for the R-134a A/C compressor. Intermixing the recommended (PAG) refrigerant oil with any other refrigerant oil will result in A/C compressor failure.
- All A/C system parts (A/C compressor, discharge line, suction line, evaporator, A/C condenser, receiver/dryer, expansion valve, O-rings for joints) are designed for refrigerant R-134a. Do not exchange with R-12 parts.
- Use a halogen gas leak detector designed for refrigerant R-134a.
- R-12 and R-134a refrigerant servicing equipment are not interchangeable. Use only a recovery/recycling/charging station that is U.L.-listed and is certified to meet the requirements of SAE J2210 to service the R-134a air conditioning systems.
- Always recover refrigerant R-134a with an approved recovery/recycling/charging station before disconnecting any A/C fitting.



BACK

Protected by AR

## Oil Separator

Oil emission from the A/C compressor to the A/C line is reduced by placing the oil separator in the A/C compressor. This results in a thinner oil film inside of the heat exchanger (A/C condenser and evaporator). Air conditioning efficiency is increased without sacrificing engine performance.

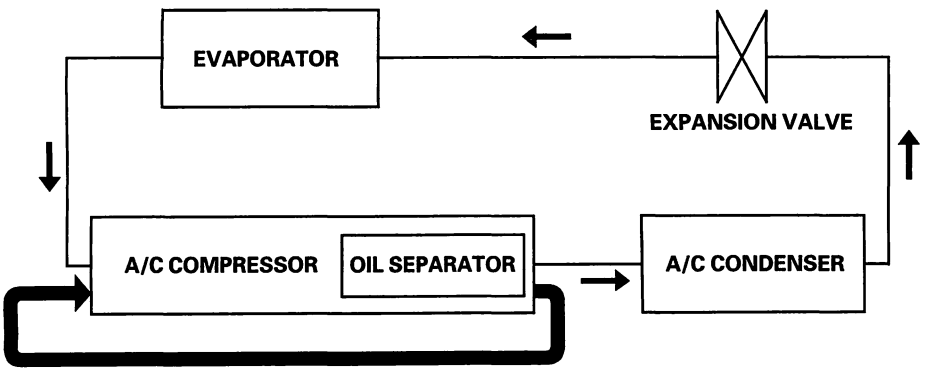


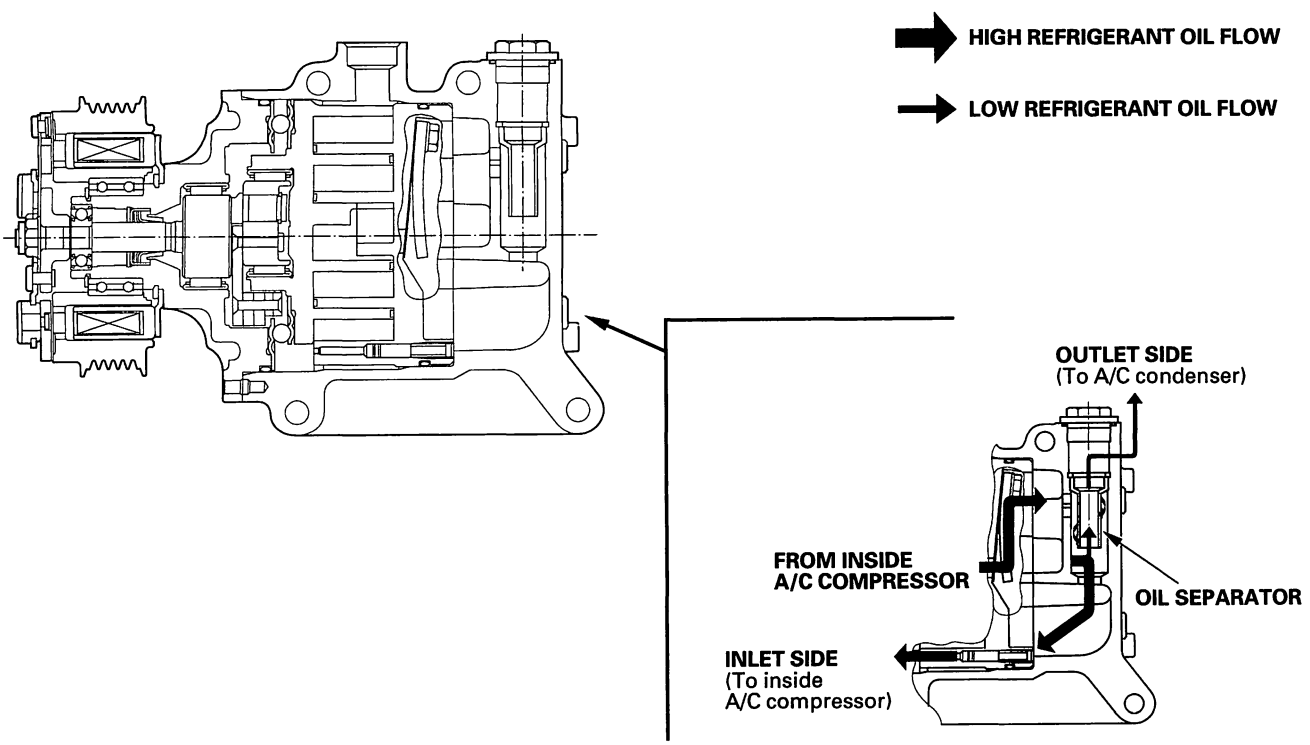


(cont'd)

Protected by AR



## System Description (cont'd)

### A/C Pressure Sensor

The A/C pressure sensor converts A/C pressure into electrical signals to the PCM.

NOTE: The pressures can be monitored using the HDS PGM-FI Data List.

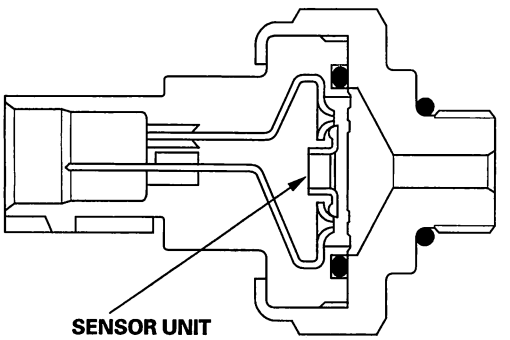


The response of the A/C pressure sensor is shown in the graph.

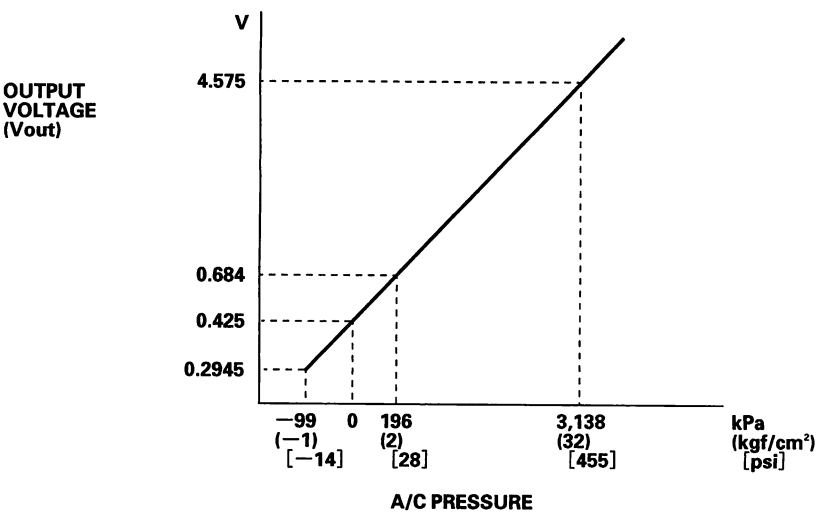


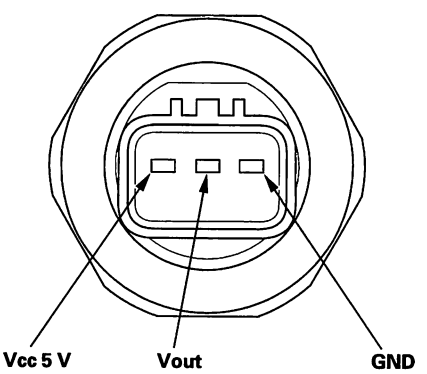




BACK

Protected by AR

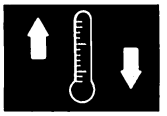

**Dual Air Mix Control System**

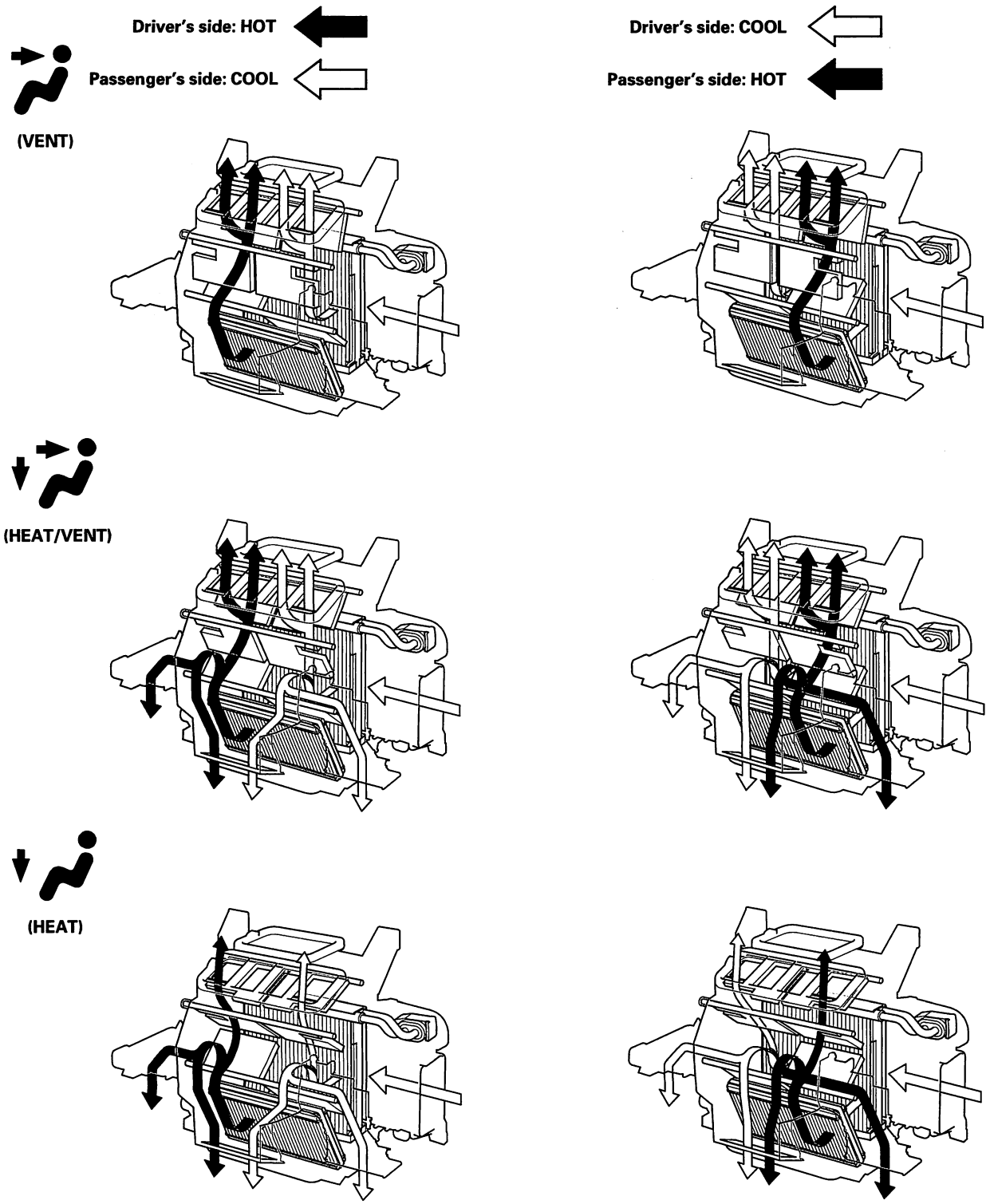


(cont'd)

BACK

Protected by AR



## System Description (cont'd)

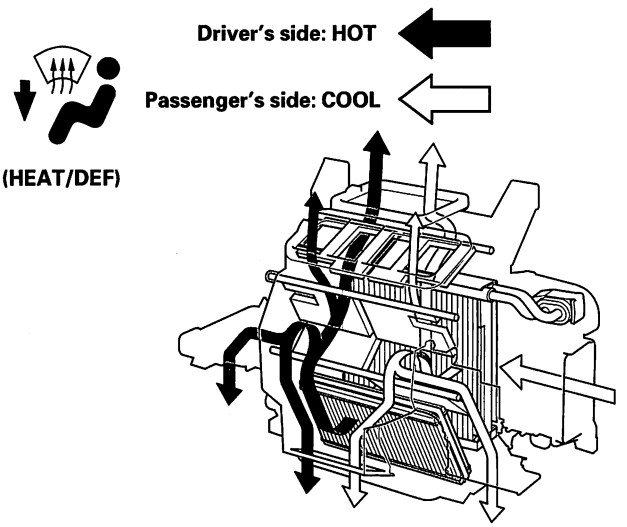


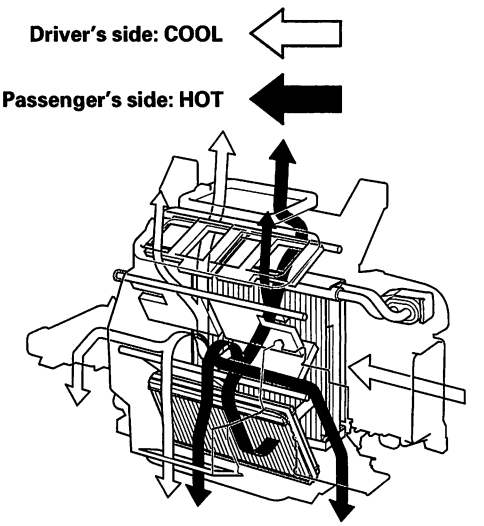


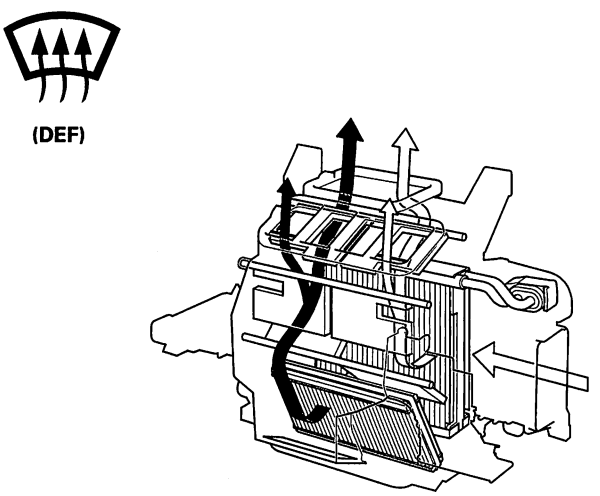


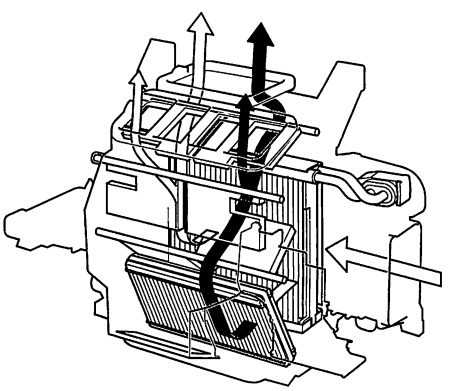



BACK

Protected by AR

## i-Dual Climate Control System (With navigation system)

This system automatically controls the temperature and the vent mode of the air direction to the driver and passenger's side, depending on the angle of the sun, and the direction of the vehicle. It calculates information such as date, time, longitude, and latitude from the navigation system, as well as the radiant strength of the sun from the sunlight sensor, to determine the appropriate mode position and temperature to be directed to each side.

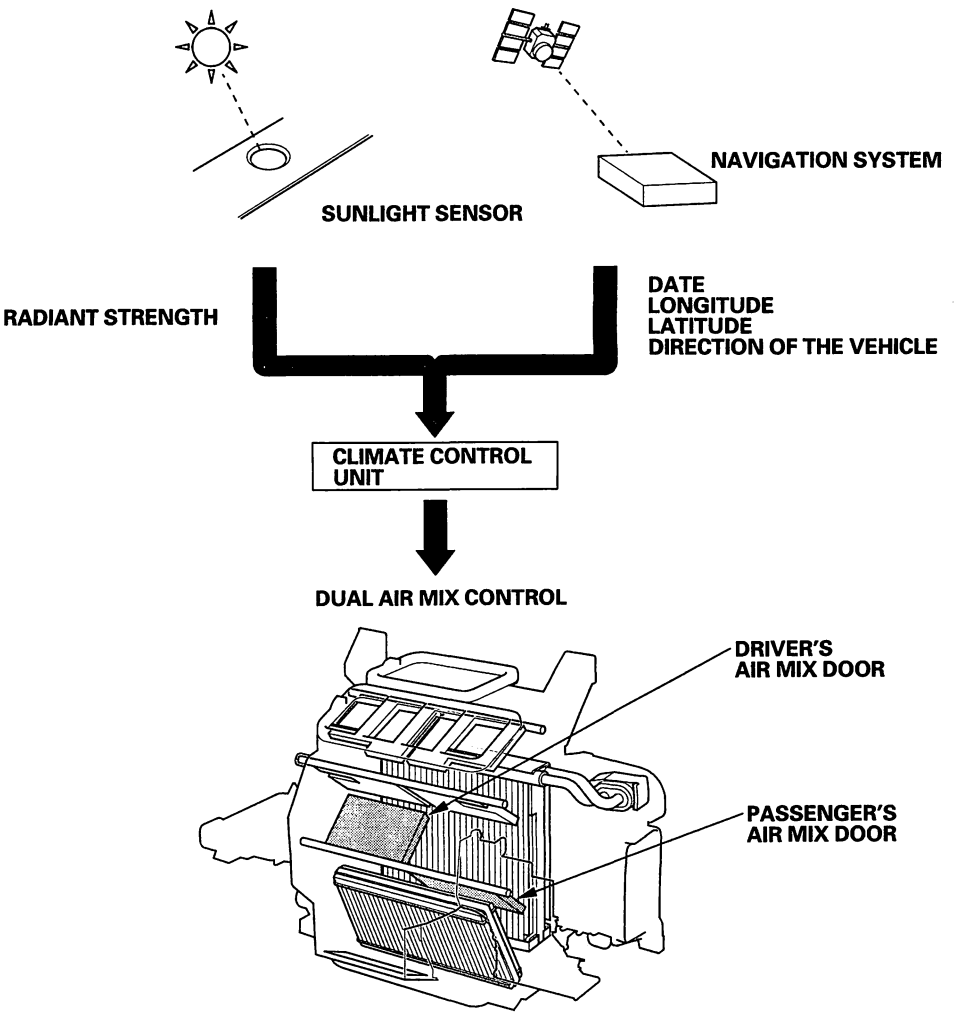


In the event that the navigation system malfunctions, or when driving in areas where the navigation system cannot determine the vehicle position (non-coverage areas, tunnels, etc.), the climate control system will operate the same as a vehicle without a navigation system.

(cont'd)

Protected by AR



## System Description (cont'd)

### Climate Control Unit Inputs and Outputs

**CLIMATE CONTROL UNIT CONNECTORS**

**CONNECTOR A (24P)**

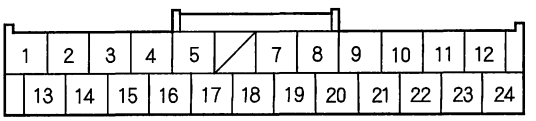


**CONNECTOR B (16P)**

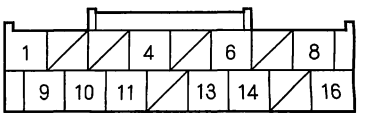


Wire side of female terminals

**CONNECTOR A**

| Cavity | Wire color | Signal | |
|---|---|---|---|
| 1 | RED | MODE 1 | OUTPUT |
| 2 | PNK | MODE 2 | OUTPUT |
| 3 | PUR | MODE 3 | OUTPUT |
| 4 | BLU | MODE 4 | OUTPUT |
| 5 | BRN | AIR MIX POTENTIAL +5 V | OUTPUT |
| 6 | ——— | ——— | ——— |
| 7 | GRN | MODE DEF | OUTPUT |
| 8 | WHT | MODE VENT | OUTPUT |
| 9 | PNK | DRIVER'S AIR MIX HOT | OUTPUT |
| 10 | LT BLU | DRIVER'S AIR MIX COOL | OUTPUT |
| 11 | ORN | PASSENGER'S AIR MIX HOT | OUTPUT |
| 12 | BRN | PASSENGER'S AIR MIX COOL | OUTPUT |
| 13 | PUR | EVAPORATOR TEMPERATURE SENSOR | OUTPUT |
| 14 | YEL | OUTSIDE AIR TEMPERATURE SENSOR | OUTPUT |
| 15 | WHT | PASSENGER'S AIR MIX POTENTIAL | OUTPUT |
| 16 | GRY | DRIVER'S AIR MIX POTENTIAL | OUTPUT |
| 17 | BLU | A/C SIGNAL | OUTPUT |
| 18 | ORN | SENSOR COMMON GROUND 1 | INPUT |
| 19 | LT BLU | RECIRCULATE | INPUT |
| 20 | GRY | FRESH | INPUT |
| 21 | LT GRN | REAR WINDOW DEFOGGER RELAY | INPUT |
| 22 | RED | BLOWER FEEDBACK | INPUT |
| 23 | YEL | POWER TRANSISTOR CONTROL | OUTPUT |
| 24 | BLK | GROUND (G571) | OUTPUT |

**CONNECTOR B**

| Cavity | Wire color | Signal | |
|---|---|---|---|
| 1 | RED | NAVIGATION UNIT (SO) | OUTPUT |
| 2 | ——— | ——— | ——— |
| 3 | ——— | ——— | ——— |
| 4 | RED | SENSOR COMMON GROUND 2 | INPUT |
| 5 | ——— | ——— | ——— |
| 6 | GRY | DRIVER'S CLIMATE CONTROL SWITCH (BUS-DATA) | INPUT/OUTPUT |
| 7 | ——— | ——— | ——— |
| 8 | PNK | B-CAN | INPUT/OUTPUT |
| 9 | BLU | NAVIGATION UNIT (CLK) | OUTPUT |
| 10 | YEL | NAVIGATION UNIT (SI) | INPUT |
| 11 | LT GRN | AUDIO UNIT (SI) | INPUT |
| 12 | ——— | ——— | ——— |
| 13 | PUR | SUNLIGHT SENSOR | OUTPIT |
| 14 | LT BLU | IN-CAR TEMPERATURE SENSOR | OUTPUT |
| 15 | ——— | ——— | ——— |
| 16 | GRN | IG 2 (POWER) | INPUT |



BACK

Protected by AR

Protected by AR

# Climate Control

## Circuit Diagram

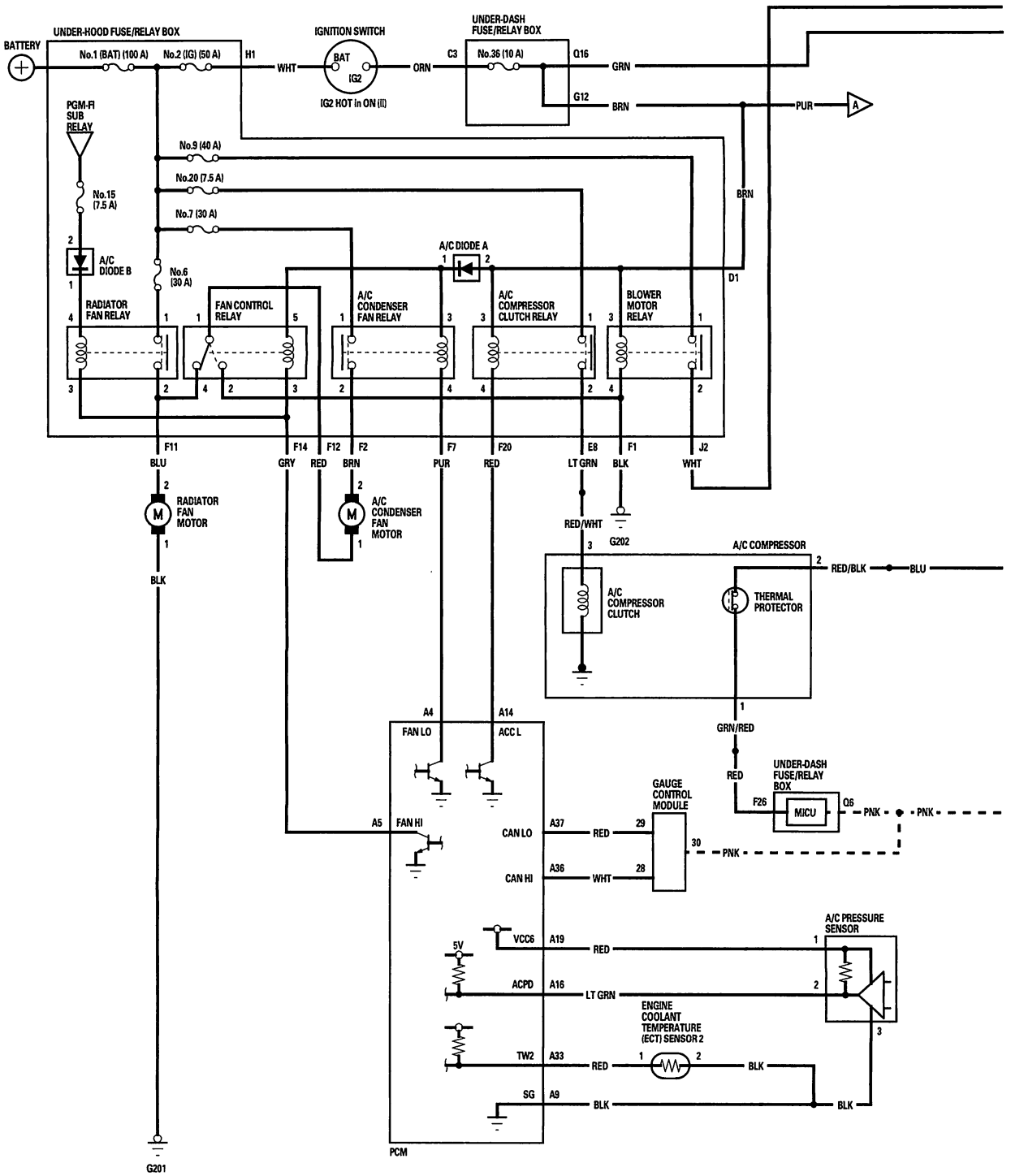




BACK

Protected by AR

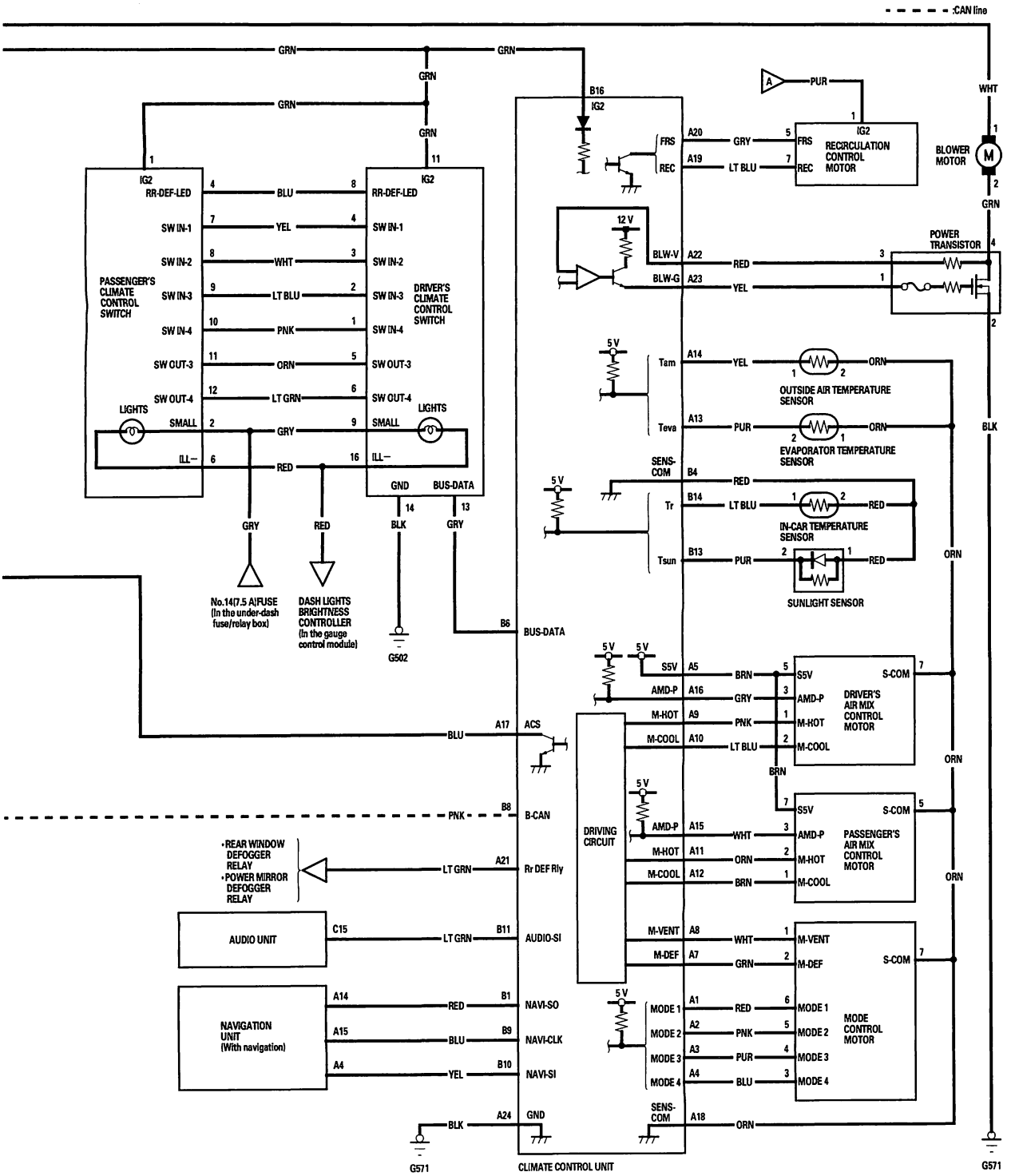


BACK

Protected by AR



## DTC Troubleshooting

### DTC indicator G: Climate Control Unit Internal Error

NOTE:
- Check the battery condition (see page 22-63) and the charging system (see page 4-26).
- If you are troubleshooting multiple DTCs, be sure to follow the instructions in B-CAN system diagnosis test mode A (see page 22-88).

1. Turn the ignition switch OFF, and then ON (II).

2. Do the self-diagnostic with the climate control unit (see page 21-10).

3. Check for DTCs.

   *Is DTC indicator G indicated?*

   **YES**—The climate control unit is faulty, replace the climate control unit (see page 21-88). ■

   **NO**—Intermittent failure, the climate control unit is OK at this time. ■

### DTC B1205 or DTC indicator H: Climate Control Unit Lost Communication with Gauge Control Module (VSP/NE message)

NOTE: If you are troubleshooting multiple DTCs, be sure to follow the instructions in B-CAN system diagnosis test mode A (see page 22-88).

1. Clear the DTC with the HDS.

2. Turn the ignition switch OFF, and then ON (II).

3. Do the self-diagnostic with the HDS (see page 21-8) or climate control unit (see page 21-10).

4. Check for DTCs.

   *Are DTC B1205 or H indicated?*

   **YES**—Go to step 5.

   **NO**—The system is OK at this time, check for loose wires or poor connections on the gauge control module and climate control unit circuit. ■

5. Check for DTCs with the HDS.

   *Are DTC B1008, B1011, B1032, B1906 and B1205 also indicated?*

   **YES**—Go to step 6.

   **NO**—The climate control unit is faulty. Replace the climate control unit. ■

6. Select UNIT INFORMATION in the BODY ELECTRICAL menu.

7. Select CONNECTED UNIT in the UNIT INFORMATION menu.

   *Is gauge control module detected?*

   **YES**—Substitute a known-good gauge control module, and recheck. If the symptom/indication goes away, replace the gauge control module (see page 22-284). ■

   **NO**—Go to step 8.



BACK

Protected by AR

8. Disconnect under-dash fuse/relay box connector Q (16P).

9. Disconnect the gauge control module 36P connector.

10. Check for continuity between under-dash fuse/relay box connector Q (16P) terminal No. 6 and the gauge control module 36P connector terminal No. 30.

**UNDER-DASH FUSE/RELAY BOX CONNECTOR Q (16P)**
Wire side of female terminals

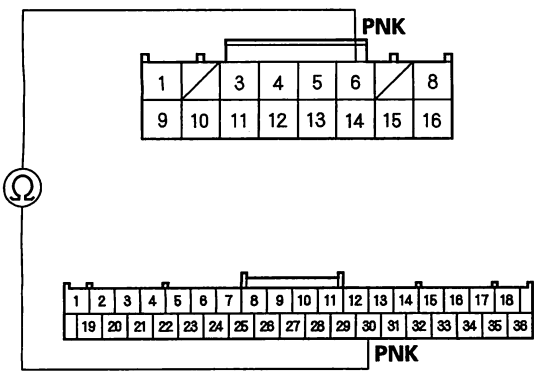


**GAUGE CONTROL MODULE 36P CONNECTOR**
Wire side of female terminals

*Is there continuity?*

**YES**—Go to the gauge control module input test (see page 22-282).■

**NO**—Repair open in the wire between the MICU and the gauge control module.■

## DTC B1206 or DTC indicator K: Climate Control Unit Lost Communication with Gauge Control Module (TACH) (ECT message)

NOTE: If you are troubleshooting multiple DTCs, be sure to follow the instructions in B-CAN system diagnosis test mode A (see page 22-88).

1. Clear the DTC with the HDS.

2. Turn the ignition switch OFF, and then ON (II).

3. Do the self-diagnostic with the HDS (see page 21-8) or climate control unit (see page 21-10).

4. Check for DTCs.

   *Are DTC B1206 or K indicated?*

   **YES**—Go to step 5.

   **NO**—The system is OK at this time, check for loose wires or poor connections on the gauge control module and climate control unit circuit.■

5. Check for DTCs with the HDS.

   *Are DTC B1008, B1011, B1032, B1906 and B1206 also indicated?*

   **YES**—Go to step 6.

   **NO**—The climate control unit is faulty. Replace the climate control unit.■

6. Select UNIT INFORMATION in the BODY ELECTRICAL menu.

7. Select CONNECTED UNIT in the UNIT INFORMATION menu.

   *Is gauge control module detected?*

   **YES**—Substitute a known-good gauge control module, and recheck. If the symptom/indication goes away, replace the gauge control module (see page 22-284).■

   **NO**—Go to step 8.

(cont'd)

Protected by AR



## DTC Troubleshooting (cont'd)

8. Disconnect under-dash fuse/relay box connector Q (16P).

9. Disconnect the gauge control module 36P connector.

10. Check for continuity between under-dash fuse/relay box connector Q (16P) terminal No. 6 and the gauge control module 36P connector terminal No. 30.

**UNDER-DASH FUSE/RELAY BOX CONNECTOR Q (16P)**
Wire side of female terminals

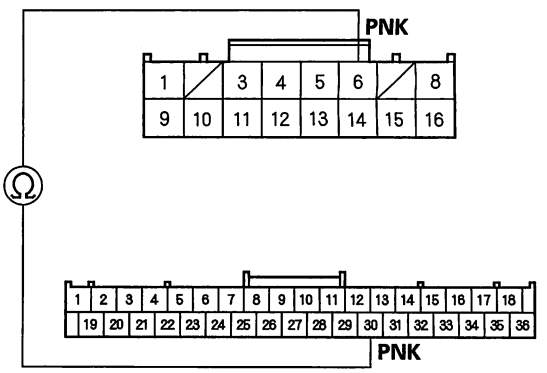


**GAUGE CONTROL MODULE 36P CONNECTOR**
Wire side of female terminals

*Is there continuity?*

**YES**—Go to the gauge control module input test (see page 22-282).■

**NO**—Repair open in the wire between the MICU and the gauge control module.■

### DTC B1207 or DTC indicator J: Climate Control Unit Lost Communication with Gauge Control Module (ILLUMI message)

NOTE: If you are troubleshooting multiple DTCs, be sure to follow the instructions in B-CAN system diagnosis test mode A (see page 22-88).

1. Clear the DTC with the HDS.

2. Turn the ignition switch OFF, and then ON (II).

3. Do the self-diagnostic with the HDS (see page 21-8) or climate control unit (see page 21-10).

4. Check for DTCs.

   *Are DTC B1207 or J indicated?*

   **YES**—Go to step 5.

   **NO**—The system is OK at this time, check for loose wires or poor connections on the gauge control module and climate control unit circuit.■

5. Check for DTCs with the HDS.

   *Are DTC B1008, B1011, B1032, B1906 and B1207 also indicated?*

   **YES**—Go to step 6.

   **NO**—The climate control unit is faulty. Replace the climate control unit.■

6. Select UNIT INFORMATION in the BODY ELECTRICAL menu.

7. Select CONNECTED UNIT in the UNIT INFORMATION menu.

   *Is gauge control module detected?*

   **YES**—Substitute a known-good gauge control module, and recheck. If the symptom/indication goes away, replace the gauge control module (see page 22-284).■

   **NO**—Go to step 8.



BACK

Protected by AR

8. Disconnect under-dash fuse/relay box connector Q (16P).

9. Disconnect the gauge control module 36P connector.

10. Check for continuity between under-dash fuse/relay box connector Q (16P) terminal No. 6 and the gauge control module 36P connector terminal No. 30.

**UNDER-DASH FUSE/RELAY BOX CONNECTOR Q (16P)**
Wire side of female terminals

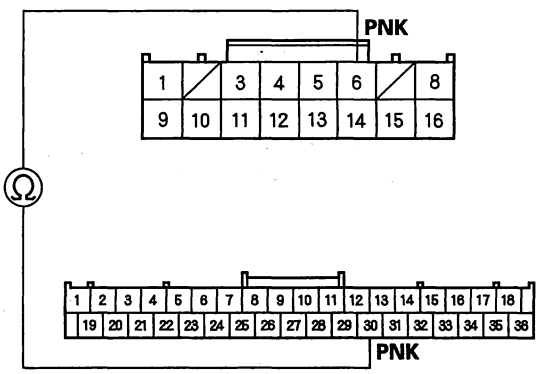


**GAUGE CONTROL MODULE 36P CONNECTOR**
Wire side of female terminals

*Is there continuity?*

**YES**—Go to the gauge control module input test (see page 22-282).■

**NO**—Repair open in the PNK wire between the MICU and the gauge control module.■

## DTC B1225 or DTC indicator A and AUTO: An Open in the In-car Temperature Sensor Circuit

1. Clear the DTC with the HDS.

2. Turn the ignition switch OFF, and then ON (II).

3. Do the self-diagnostic with the HDS (see page 21-8) or climate control unit (see page 21-10).

4. Check for DTCs.

   *Is DTC B1225 or A and AUTO indicated?*

   **YES**—Go to step 5.

   **NO**—Intermittent failure, check for loose wires or poor connections on the in-car temperature sensor circuit.■

5. Turn the ignition switch OFF.

6. Remove the in-car temperature sensor (see page 21-78) and test it (see page 21-78).

   *Is the in-car temperature sensor OK?*

   **YES**—Go to step 7.

   **NO**—Replace the in-car temperature sensor.■

7. Disconnect the climate control unit connector B (16P).

(cont'd)

Protected by AR



## DTC Troubleshooting (cont'd)

8. Check for continuity between the climate control unit connector B (16P) terminal No. 14 and the in-car temperature sensor 2P connector terminal No. 1.

**CLIMATE CONTROL UNIT CONNECTOR B (16P)**
Wire side of female terminals

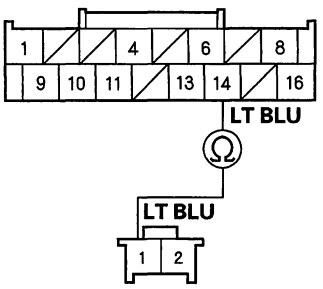


**IN-CAR TEMPERATURE SENSOR 2P CONNECTOR**
Wire side of female terminals

*Is there continuity?*

**YES**—Go to step 9.

**NO**—Repair open in the wire between the climate control unit and the in-car temperature sensor.■

9. Check for continuity between climate control unit connector B (16P) terminal No. 4 and the in-car temperature sensor 2P connector terminal No. 2.

**CLIMATE CONTROL UNIT CONNECTOR B (16P)**
Wire side of female terminals

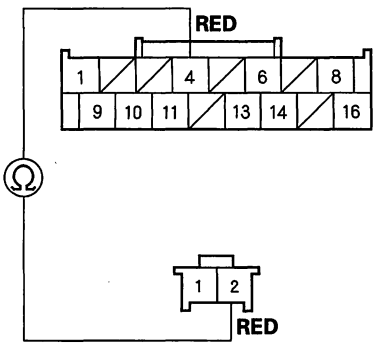


**IN-CAR TEMPERATURE SENSOR 2P CONNECTOR**
Wire side of female terminals

*Is there continuity?*

**YES**—Check for loose wires or poor connections at the climate control unit connector B (16P) and at the in-car temperature sensor 2P connector. If the connections are good, substitute a known-good climate control unit, and recheck. If the symptom/indication goes away, replace the original climate control unit.■

**NO**—Repair open in the wire between the climate control unit and the in-car temperature sensor.■



BACK

Protected by AR

## DTC B1226 or DTC indicator B and AUTO: A Short in the In-car Temperature Sensor Circuit

1. Clear the DTC with the HDS.
2. Turn the ignition switch OFF, and then ON (II).
3. Do the self-diagnostic with the HDS (see page 21-8) or climate control unit (see page 21-10).
4. Check for DTCs.

   *Is DTC B1226 or B and AUTO indicated?*

   **YES**—Go to step 5.

   **NO**—Intermittent failure.■

5. Turn the ignition switch OFF.
6. Remove the in-car temperature sensor (see page 21-78) and test it (see page 21-78).

   *Is the in-car temperature sensor OK?*

   **YES**—Go to step 7.

   **NO**—Replace the in-car temperature sensor.■

7. Disconnect the climate control unit connector B (16P).
8. Check for continuity between body ground and the climate control unit connector B (16P) terminal No. 14.

**CLIMATE CONTROL UNIT CONNECTOR B (16P)**

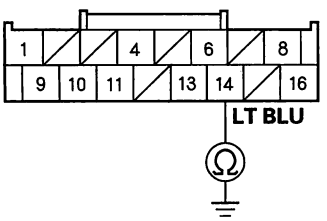


Wire side of female terminals

*Is there continuity?*

**YES**—Repair short to body ground in the wire between the climate control unit and the in-car temperature sensor.■

**NO**—Go to step 9.

9. Check for continuity between the climate control unit connector B (16P) terminals No. 4 and No. 14.

**CLIMATE CONTROL UNIT CONNECTOR B (16P)**

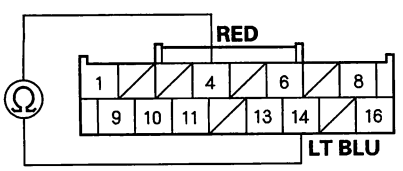


Wire side of female terminals

*Is there continuity?*

**YES**—Repair short in the wires between the climate control unit and the in-car temperature sensor.■

**NO**—Substitute a known-good climate control unit, and recheck. If the symptom/indication goes away, replace the original climate control unit.■

BACK

Protected by AR



## DTC Troubleshooting (cont'd)

**DTC B1227 or DTC indicator C and AUTO:** An Open in the Outside Air Temperature Sensor Circuit

1. Clear the DTC with the HDS.
2. Turn the ignition switch OFF, and then ON (II).
3. Do the self-diagnostic with the HDS (see page 21-8) or climate control unit (see page 21-10).
4. Check for DTCs.

   *Is DTC B1227 or C and AUTO indicated?*

   **YES**—Go to step 5.

   **NO**—Intermittent failure, check for loose wires or poor connections on the outside air temperature sensor circuit. ■

5. Turn the ignition switch OFF.
6. Remove the outside air temperature sensor (see page 21-79) and test it (see page 21-79).

   *Is the outside air temperature sensor OK?*

   **YES**—Go to step 7.

   **NO**—Replace the outside air temperature sensor. ■

7. Disconnect the climate control unit connector A (24P).
8. Check for continuity between the climate control unit connector A (24P) terminal No. 14 and the outside air temperature sensor 2P connector terminal No. 1.

**CLIMATE CONTROL UNIT CONNECTOR A (24P)**
Wire side of female terminals

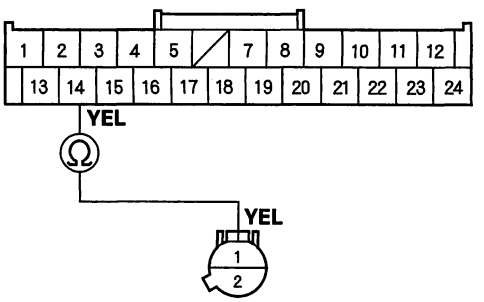


**OUTSIDE AIR TEMPERATURE SENSOR 2P CONNECTOR**
Wire side of female terminals

*Is there continuity?*

**YES**—Go to step 9.

**NO**—Repair open in the wire between the climate control unit and the outside air temperature sensor. ■



BACK

Protected by AR

9. Check for continuity between the climate control unit connector A (24P) terminal No. 18 and the outside air temperature sensor 2P connector terminal No. 2.

**CLIMATE CONTROL UNIT CONNECTOR A (24P)**
Wire side of female terminals

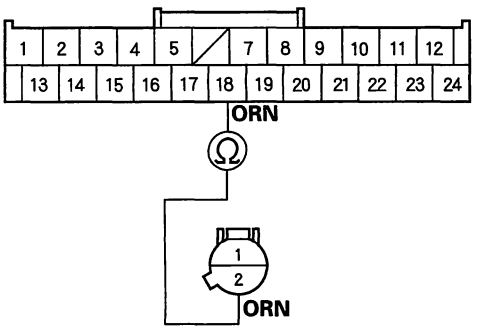


**OUTSIDE AIR TEMPERATURE SENSOR 2P CONNECTOR**
Wire side of female terminals

*Is there continuity?*

**YES**—Check for loose wires or poor connections at the climate control unit connector A (24P) and at the outside air temperature sensor 2P connector. If the connections are good, substitute a known-good climate control unit, and recheck. If the symptom/indication goes away, replace the original climate control unit. ■

**NO**—Repair open in the wire between the climate control unit and the outside air temperature sensor. ■

## DTC B1228 or DTC indicator D and AUTO: A Short in the Outside Air Temperature Sensor Circuit

1. Clear the DTC with the HDS.
2. Turn the ignition switch OFF, and then ON (II).
3. Do the self-diagnostic with the HDS (see page 21-8) or climate control unit (see page 21-10).
4. Check for DTCs.

   *Is DTC B1228 or D and AUTO indicated?*

   **YES**—Go to step 5.

   **NO**—Intermittent failure. ■

5. Turn the ignition switch OFF.
6. Remove the outside air temperature sensor (see page 21-79) and test it (see page 21-79).

   *Is the outside air temperature sensor OK?*

   **YES**—Go to step 7.

   **NO**—Replace the outside air temperature sensor. ■

7. Disconnect the climate control unit connector A (24P).

(cont'd)

Protected by AR



## DTC Troubleshooting (cont'd)

8. Check for continuity between body ground and the climate control unit connector A (24P) terminal No. 14.

**CLIMATE CONTROL UNIT CONNECTOR A (24P)**

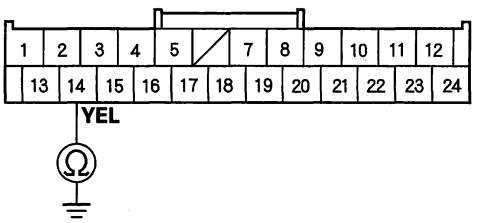


Wire side of female terminals

*Is there continuity?*

**YES**—Repair short to body ground in the wires between the climate control unit and the outside air temperature sensor.■

**NO**—Go to step 9.

9. Check for continuity between the climate control unit connector A (24P) terminals No. 14 and No. 18.

**CLIMATE CONTROL UNIT CONNECTOR A (24P)**

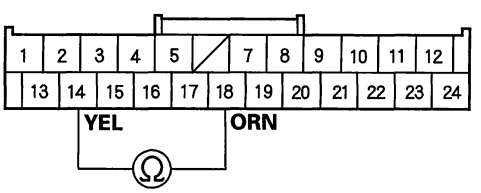


Wire side of female terminals

*Is there continuity?*

**YES**—Repair short in the wires between the climate control unit and the outside air temperature sensor.■

**NO**—Substitute a known-good climate control unit, and recheck. If the symptom/indication goes away, replace the original climate control unit.■

### DTC B1229 or DTC indicator E and AUTO: An Open in the Sunlight Sensor Circuit

1. Clear the DTC with the HDS.

2. Turn the ignition switch OFF, and then ON (II).

3. Do the self-diagnostic with the HDS (see page 21-8) or climate control unit (see page 21-10).

4. Check for DTCs.

*Is DTC B1229 or E and AUTO indicated?*

**YES**—Go to step 5.

**NO**—Intermittent failure, check for loose wires or poor connections on the sunlight sensor circuit.■

5. Turn the ignition switch OFF.

6. Test the sunlight sensor (see page 21-80).

*Is the sunlight sensor OK?*

**YES**—Go to step 7.

**NO**—Replace the sunlight sensor (see page 21-80).■

7. Disconnect the sunlight sensor 2P connector.

8. Disconnect the climate control unit connector B (16P).

9. Check for continuity between the climate control unit connector B (16P) terminal No. 13 and the sunlight sensor 2P connector terminal No. 2.

**CLIMATE CONTROL UNIT CONNECTOR B (16P)**
Wire side of female terminals

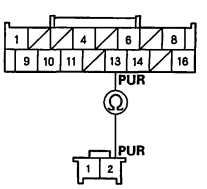


**SUNLIGHT SENSOR 2P CONNECTOR**
Wire side of female terminals

*Is there continuity?*

**YES**—Go to step 10.

**NO**—Repair open in the wire between the climate control unit and the sunlight sensor.■



BACK

Protected by AR

10. Check for continuity between the climate control unit connector B (16P) terminal No. 4 and the sunlight sensor 2P connector terminal No. 1.

**CLIMATE CONTROL UNIT CONNECTOR B (16P)**
Wire side of female terminals

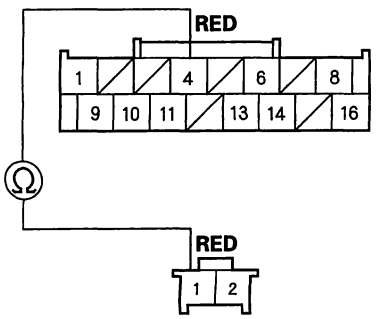


**SUNLIGHT SENSOR 2P CONNECTOR**
Wire side of female terminals

*Is there continuity?*

**YES**—Check for loose wires or poor connections at the climate control unit connector B (16P) and at the sunlight sensor 2P connector. If the connections are good, substitute a known-good climate control unit, and recheck. If the symptom/indication goes away, replace the original climate control unit.■

**NO**—Repair open in the wire between the climate control unit and the sunlight sensor.■

## DTC B1230 or DTC indicator F and AUTO: A Short in the Sunlight Sensor Circuit

1. Clear the DTC with the HDS.
2. Turn the ignition switch OFF, and then ON (II).
3. Do the self-diagnostic with the HDS (see page 21-8) or climate control unit (see page 21-10).
4. Check for DTCs.

   *Is DTC B1230 or F and AUTO indicated?*

   **YES**—Go to step 5.

   **NO**—Intermittent failure.■

5. Turn the ignition switch OFF.
6. Test the sunlight sensor (see page 21-80).

   *Is the sunlight sensor OK?*

   **YES**—Go to step 7.

   **NO**—Replace the sunlight sensor (see page 21-80).■

7. Disconnect the sunlight sensor 2P connector.
8. Disconnect the climate control unit connector B (16P).
9. Check for continuity between body ground and the climate control unit connector B (16P) terminal No. 13.

**CLIMATE CONTROL UNIT CONNECTOR B (16P)**

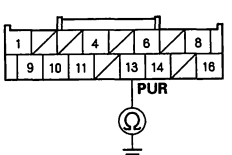


Wire side of female terminals

*Is there continuity?*

**YES**—Repair short to body ground in the wire between the climate control unit and the sunlight sensor.■

**NO**—Go to step 10.

(cont'd)

Protected by AR



## DTC Troubleshooting (cont'd)

10. Check for continuity between the climate control unit connector B (16P) terminals No. 4 and No. 13.

**CLIMATE CONTROL UNIT CONNECTOR B (16P)**

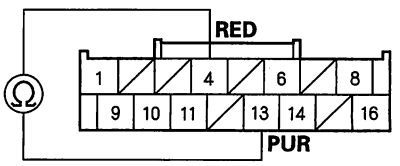


Wire side of female terminals

*Is there continuity?*

**YES**—Repair short in the wires between the climate control unit and the sunlight sensor. ■

**NO**—Substitute a known-good climate control unit, and recheck. If the symptom/indication goes away, replace the original climate control unit. ■

**DTC B1231 or DTC indicator G and AUTO:** An Open in the Evaporator Temperature Sensor Circuit

1. Clear the DTC with the HDS.
2. Turn the ignition switch OFF, and then ON (II).
3. Do the self-diagnostic with the HDS (see page 21-8) or climate control unit (see page 21-10).
4. Check for DTCs.

   *Is DTC B1231 or G and AUTO indicated?*

   **YES**—Go to step 5.

   **NO**—Intermittent failure, check for loose wires or poor connections on the evaporator temperature sensor circuit. ■

5. Turn the ignition switch OFF.
6. Test the evaporator temperature sensor (see page 21-81).

   *Is the evaporator temperature sensor OK?*

   **YES**—Go to step 7.

   **NO**—Replace the evaporator temperature sensor. ■



BACK

Protected by AR

7. Disconnect the climate control unit connector A (24P).

8. Check for continuity between the climate control unit connector A (24P) terminal No. 13 and the evaporator temperature sensor 2P connector terminal No. 2.

**CLIMATE CONTROL UNIT CONNECTOR A (24P)**
Wire side of female terminals

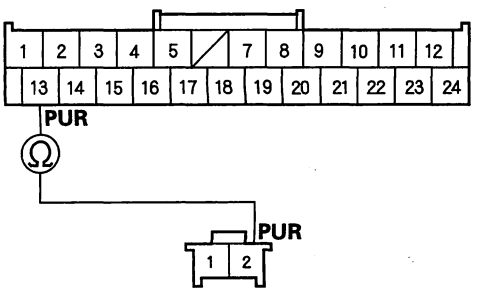


**EVAPORATOR TEMPERATURE SENSOR 2P CONNECTOR**
Wire side of female terminals

*Is there continuity?*

**YES**—Go to step 9.

**NO**—Repair open in the wire between the climate control unit and the evaporator temperature sensor. ■

9. Check for continuity between the climate control unit connector A (24P) terminal No. 18 and the evaporator temperature sensor 2P connector terminal No. 1.

**CLIMATE CONTROL UNIT CONNECTOR A (24P)**
Wire side of female terminals

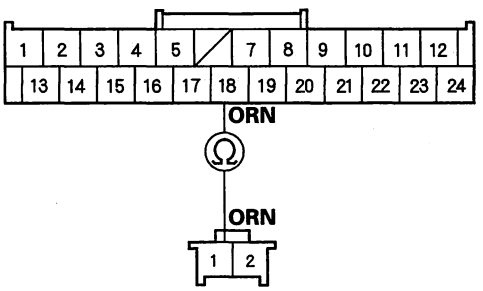


**EVAPORATOR TEMPERATURE SENSOR 2P CONNECTOR**
Wire side of female terminals

*Is there continuity?*

**YES**—Check for loose wires or poor connections at the climate control unit connector A (24P) and at the evaporator temperature sensor 2P connector. If the connections are good, substitute a known-good climate control unit, and recheck. If the symptom/indication goes away, replace the original climate control unit. ■

**NO**—Repair open in the wire between the climate control unit and the evaporator temperature sensor. ■

Protected by AR



## DTC Troubleshooting (cont'd)

### DTC B1232 or DTC indicator H and AUTO: A Short in the Evaporator Temperature Sensor Circuit

1. Clear the DTC with the HDS.
2. Turn the ignition switch OFF, and then ON (II).
3. Do the self-diagnostic with the HDS (see page 21-8) or climate control unit (see page 21-10).
4. Check for DTCs.

   *Is DTC B1232 or H and AUTO indicated?*

   **YES**—Go to step 5.

   **NO**—Intermittent failure. ■

5. Turn the ignition switch OFF.
6. Test the evaporator temperature sensor (see page 21-81).

   *Is the evaporator temperature sensor OK?*

   **YES**—Go to step 7.

   **NO**—Replace the evaporator temperature sensor. ■

7. Disconnect the climate control unit connector A (24P).
8. Check for continuity between body ground and the climate control unit connector A (24P) terminal No. 13.

**CLIMATE CONTROL UNIT CONNECTOR A (24P)**

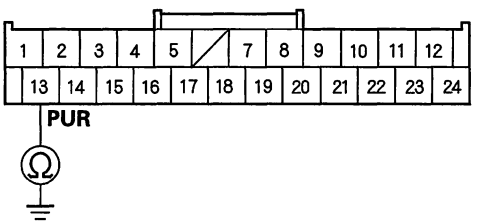


Wire side of female terminals

*Is there continuity?*

**YES**—Repair short to body ground in the wire between the climate control unit and the evaporator temperature sensor. ■

**NO**—Go to step 9.

9. Check for continuity between the climate control unit connector A (24P) terminals No. 13 and No. 18.

**CLIMATE CONTROL UNIT CONNECTOR A (24P)**

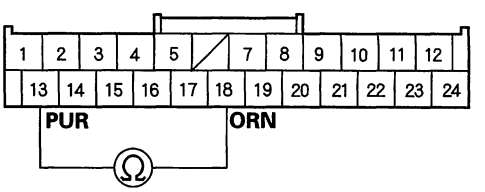


Wire side of female terminals

*Is there continuity?*

**YES**—Repair short in the wires between the climate control unit and the evaporator temperature sensor. ■

**NO**—Substitute a known-good climate control unit, and recheck. If the symptom/indication goes away, replace the original climate control unit. ■



BACK

Protected by AR

**DTC B1233 or DTC indicator J and AUTO:** An Open in the Driver's Air Mix Control Motor Circuit

1. Start the engine.
2. Turn on the A/C, then set the driver's climate control switch to max hot.
3. Turn the ignition switch OFF.
4. Clear the DTC with the HDS.
5. Turn the ignition switch OFF, and then ON (II).
6. Do the self-diagnostic with the HDS (see page 21-8) or climate control unit (see page 21-10).
7. Check for DTCs.

   *Is DTC B1233 or J and AUTO indicated?*

   **YES**—Go to step 8.

   **NO**—Intermittent failure, check for loose wires or poor connections on the driver's air mix control motor circuit. ■

8. Turn the ignition switch OFF.
9. Test the driver's air mix control motor (see page 21-83).

   *Is the driver's air mix control motor OK?*

   **YES**—Go to step 10.

   **NO**—Replace the driver's air mix control motor (see page 21-83). ■

10. Disconnect the driver's air mix control motor 7P connector.
11. Disconnect climate control unit connector A (24P).
12. Check for continuity between the following terminals of climate control unit connector A (24P) and the driver's air mix control motor 7P connector.

| 24P: | 7P: |
|---|---|
| No. 5 | No. 5 |
| No. 16 | No. 3 |
| No. 18 | No. 7 |

**CLIMATE CONTROL UNIT CONNECTOR A (24P)**
Wire side of female terminals

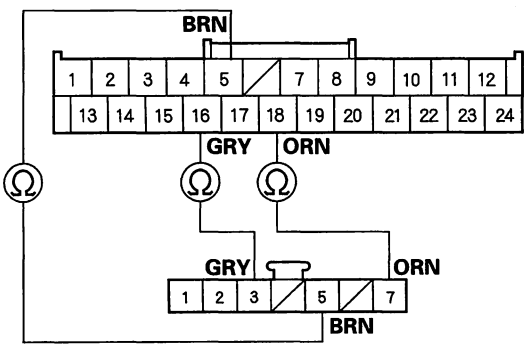


**DRIVER'S AIR MIX CONTROL MOTOR 7P CONNECTOR**
Wire side of female terminals

*Is there continuity?*

**YES**—Check for loose wire or poor connections at climate control unit connector A (24P) and at the driver's air mix control motor 7P connector. If the connections are good, substitute a known-good climate control unit and recheck. If the symptom/indication goes away, replace the original climate control unit. ■

**NO**—Repair open in the wire(s) between the climate control unit and the driver's air mix control motor. ■

Protected by AR



## DTC Troubleshooting (cont'd)

### DTC B1234 or DTC indicator K and AUTO: A Short in the Driver's Air Mix Control Motor Circuit

1. Clear the DTC with the HDS.
2. Turn the ignition switch OFF, and then ON (II).
3. Do the self-diagnostic with the HDS (see page 21-8) or climate control unit (see page 21-10).
4. Check for DTCs.

   *Is DTC B1234 or K and AUTO indicated?*

   **YES**—Go to step 5.

   **NO**—Intermittent failure.■

5. Turn the ignition switch OFF.
6. Disconnect the driver's air mix control motor 7P connector.
7. Disconnect climate control unit connector A (24P).
8. Check for continuity between body ground and climate control unit connector A (24P) terminals No. 5 and 16 individually.

**CLIMATE CONTROL UNIT CONNECTOR A (24P)**

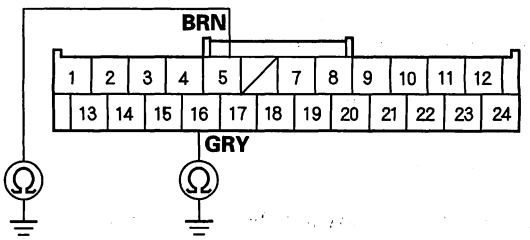


Wire side of female terminals

*Is there continuity?*

**YES**—Repair any short to body ground in the wire(s) between the climate control unit and the driver's air mix control motor.■

**NO**—Go to step 9.

9. Check for continuity between the terminals of climate control unit connector A (24P) as follows.

| From terminal | To terminals |
|---|---|
| A5 | A16, A18 |
| A16 | A18 |

*Is there continuity between any of the terminals?*

**YES**—Repair the short in the wires.■

**NO**—Go to step 10.



BACK

Protected by AR

10. Turn the ignition switch ON (II), and check the same terminals for voltage.

**CLIMATE CONTROL UNIT CONNECTOR A (24P)**

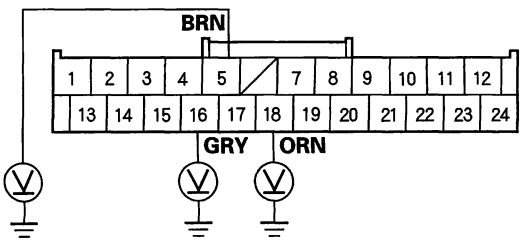


Wire side of female terminals

*Is there any voltage?*

**YES**—Repair short to power in the wire(s) between the climate control unit and the driver's air mix control motor. ■

**NO**—Go to step 11.

11. Test the driver's air mix control motor (see page 21-83).

*Is the driver's air mix control motor OK?*

**YES**—Check for loose wire or poor connections at climate control unit connector A (24P) and at the driver's air mix control motor 7P connector. If the connections are good, check the driver's air mix control motor operation with the original climate control unit. If the motor is not good, substitute a known-good climate control unit and recheck. If the symptom/indication goes away and the driver's air mix control motor runs, replace the original climate control unit. ■

**NO**—Replace the driver's air mix control motor (see page 21-83). ■

## DTC B1235 or DTC indicator L and AUTO: A Problem in the Driver's Air Mix Control Linkage, Door, or Motor

1. Clear the DTC with the HDS.

2. Turn the ignition switch OFF, and then ON (II).

3. Do the self-diagnostic with the HDS (see page 21-8) or climate control unit (see page 21-10).

4. Check for DTCs.

*Is DTC B1235 or L and AUTO indicated?*

**YES**—Go to step 5.

**NO**—Intermittent failure. ■

5. Turn the ignition switch OFF.

6. Test the driver's air mix control motor (see page 21-83).

*Is the driver's air mix control motor OK?*

**YES**—Go to step 6.

**NO**—Replace the driver's air mix control motor (see page 21-83), or repair the driver's air mix control linkage or door. ■

7. Disconnect the driver's air mix control motor 7P connector.

8. Disconnect climate control unit connector A (24P).

(cont'd)

Protected by AR



## DTC Troubleshooting (cont'd)

9. Check for continuity between the following terminals of the climate control unit connector A (24P) and the driver's air mix control motor 7P connector.

| 24P: | 7P: |
|---|---|
| No. 9 | No. 1 |
| No. 10 | No. 2 |

**CLIMATE CONTROL UNIT CONNECTOR A (24P)**
Wire side of female terminals

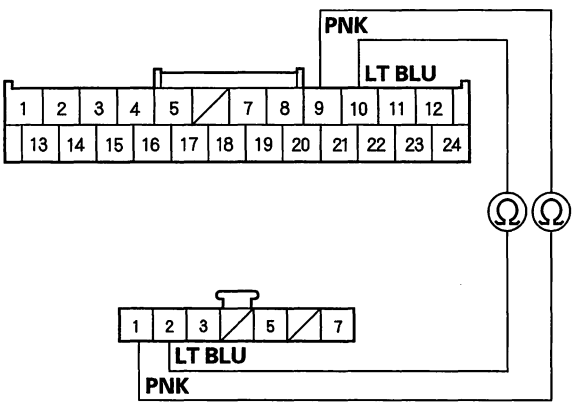


**DRIVER'S AIR MIX CONTROL MOTOR 7P CONNECTOR**
Wire side of female terminals

*Is there continuity?*

**YES**—Go to step 9.

**NO**—Repair open in the wire(s) between the climate control unit and the driver's air mix control motor. ■

10. Check for continuity between body ground and climate control unit connector A (24P) terminals No. 9 and No. 10 individually.

**CLIMATE CONTROL UNIT CONNECTOR A (24P)**

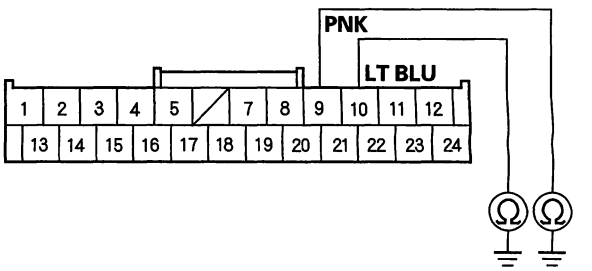


Wire side of female terminals

*Is there continuity?*

**YES**—Repair short to body ground in the wire(s) between the climate control unit and the driver's air mix control motor. ■

**NO**—Substitute a known-good climate control unit and recheck. If the symptom/indication goes away, replace the original climate control unit. ■



BACK

Protected by AR

## DTC B1236 or DTC indicator M and AUTO: An Open in the Passenger's Air Mix Control Motor Circuit

1. Start the engine.

2. Turn on the A/C, then set the passenger's climate control switch to max hot.

3. Turn the ignition switch OFF.

4. Clear the DTC with the HDS.

5. Turn the ignition switch OFF, and then ON (II).

6. Do the self-diagnostic with the HDS (see page 21-8) or climate control unit (see page 21-10).

7. Check for DTCs.

   *Is DTC B1236 or M and AUTO indicated?*

   **YES**—Go to step 8.

   **NO**—Intermittent failure.■

8. Turn the ignition switch OFF.

9. Test the passenger's air mix control motor (see page 21-84).

   *Is the passenger's air mix control motor OK?*

   **YES**—Go to step 10.

   **NO**—Replace the passenger's air mix control motor (see page 21-85).■

10. Disconnect the passenger's air mix control motor 7P connector.

11. Disconnect climate control unit connector A (24P).

12. Check for continuity between the following terminals of climate control unit connector A (24P) and the passenger's air mix control motor 7P connector.

| 24P: | 7P: |
|---|---|
| No. 5 | No. 7 |
| No. 15 | No. 3 |
| No. 18 | No. 5 |

**CLIMATE CONTROL UNIT CONNECTOR A (24P)**
Wire side of female terminals

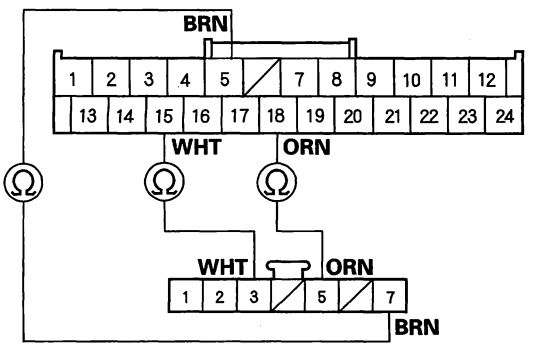


**PASSENGER'S AIR MIX CONTROL MOTOR 7P CONNECTOR**
Wire side of female terminals

*Is there continuity?*

**YES**—Check for loose wire or poor connections at climate control unit connector A (24P) and at the passenger's air mix control motor 7P connector. If the connections are good, substitute a known-good climate control unit and recheck. If the symptom/indication goes away, replace the original climate control unit.■

**NO**—Repair open in the wire(s) between the climate control unit and the passenger's air mix control motor.■

Protected by AR



## DTC Troubleshooting (cont'd)

### DTC B1237 or DTC indicator N and AUTO: A Short in the Passenger's Air Mix Control Motor Circuit

1. Clear the DTC with the HDS.
2. Turn the ignition switch OFF, and then ON (II).
3. Do the self-diagnostic with the HDS (see page 21-8) or climate control unit (see page 21-10).
4. Check for DTCs.

   *Is DTC B1237 or N and AUTO indicated?*

   **YES**—Go to step 5.

   **NO**—Intermittent failure.■

5. Turn the ignition switch OFF.
6. Disconnect the passenger's air mix control motor 7P connector.
7. Disconnect climate control unit connector A (24P).
8. Check for continuity between body ground and climate control unit connector A (24P) terminals No. 5 and 15 individually.

**CLIMATE CONTROL UNIT CONNECTOR A (24P)**

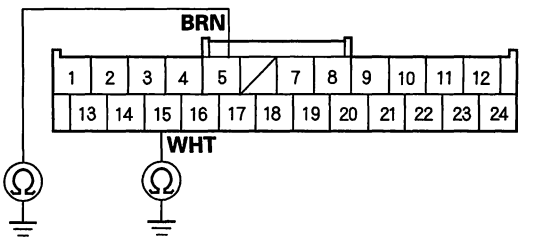


Wire side of female terminals

*Is there continuity?*

**YES**—Repair short to body ground in the wire(s) between the climate control unit and the passenger's air mix control motor.■

**NO**—Go to step 9.

9. Check for continuity between the terminals of climate control unit connector A (24P) as follows.

| From terminal | To terminals |
|---|---|
| A5 | A15, A18 |
| A15 | A18 |

*Is there continuity between any of the terminals?*

**YES**—Repair the short in the wires.■

**NO**—Go to step 10.



BACK

Protected by AR

10. Turn the ignition switch ON (II), and check the same terminals for voltage.

**CLIMATE CONTROL UNIT CONNECTOR A (24P)**

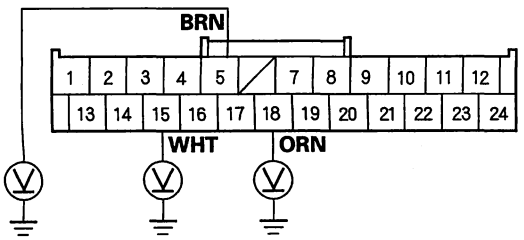


Wire side of female terminals

*Is there any voltage?*

**YES**—Repair short to power in the wire(s) between the climate control unit and the passenger's air mix control motor. ■

**NO**—Go to step 11.

11. Test the passemger's air mix control motor (see page 21-84).

*Is the passenger's air mix control motor OK?*

**YES**—Check for loose wire or poor connections at climate control unit connector A (24P) and at the passenger's air mix control motor 7P connector. If the connections are good, check the passenger's air mix control motor operation with the original climate control unit. If the motor is not good, substitute a known-good climate control unit and recheck. If the symptom/indication goes away and the passenger's air mix control motor runs, replace the original climate control unit. ■

**NO**—Replace the passenger's air mix control motor (see page 21-85).

## DTC B1238 or DTC indicator P and AUTO: A Problem in the Passenger's Air Mix Control Linkage, Door, or Motor

1. Clear the DTC with the HDS.

2. Turn the ignition switch OFF, and then ON (II).

3. Do the self-diagnostic with the HDS (see page 21-8) or climate control unit (see page 21-10).

4. Check for DTCs.

*Is DTC B1238 or P and AUTO indicated?*

**YES**—Go to step 5.

**NO**—Intermittent failure. ■

5. Turn the ignition switch OFF.

6. Test the passenger's air mix control motor (see page 21-84).

*Is the passenger's air mix control motor OK?*

**YES**—Go to step 6.

**NO**—Replace the passenger's air mix control motor (see page 21-85), or repair the passenger's air mix control linkage or door. ■

7. Disconnect the passenger's air mix control motor 7P connector.

8. Disconnect climate control unit connector A (24P).

(cont'd)

Protected by AR



## DTC Troubleshooting (cont'd)

9. Check for continuity between the following terminals of the climate control unit connector A (24P) and the passenger's air mix control motor 7P connector.

| 24P: | 7P: |
|---|---|
| No. 11 | No. 2 |
| No. 12 | No. 1 |

**CLIMATE CONTROL UNIT CONNECTOR A (24P)**
Wire side of female terminals

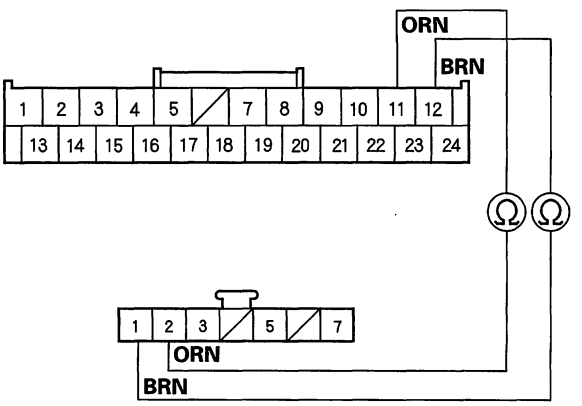


**PASSENGER'S AIR MIX CONTROL MOTOR 7P CONNECTOR**
Wire side of female terminals

*Is there continuity?*

**YES**—Go to step 10.

**NO**—Repair open in the wire(s) between the climate control unit and the passenger's air mix control motor.■

10. Check for continuity between body ground and climate control unit connector A (24P) terminals No. 11 and No. 12 individually.

**CLIMATE CONTROL UNIT CONNECTOR A (24P)**

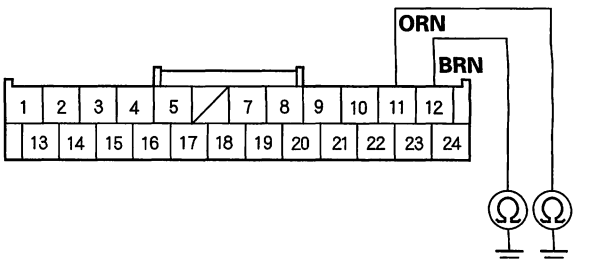


Wire side of female terminals

*Is there continuity?*

**YES**—Repair short to body ground in the wire(s) between the climate control unit and the passenger's air mix control motor.■

**NO**—Substitute a known-good climate control unit and recheck. If the symptom/indication goes away, replace the original climate control unit.■



BACK

Protected by AR

## **DTC B1239 or DTC indicator A:** An Open or Short in the Mode Control Motor Circuit

1. Clear the DTC with the HDS.
2. Turn the ignition switch OFF, and then ON (II).
3. Do the self-diagnostic with the HDS (see page 21-8) or climate control unit (see page 21-10).
4. Check for DTCs.

   *Is DTC B1239 or A indicated?*

   **YES**—Go to step 5.

   **NO**—Intermittent failure, check for loose wires or poor connections on the mode control motor circuit.■

5. Turn the ignition switch OFF.
6. Test the mode control motor (see page 21-85).

   *Is the mode control motor OK?*

   **YES**—Go to step 7.

   **NO**—Replace the mode control motor (see page 21-86).■

7. Disconnect the mode control motor 7P connector.
8. Disconnect climate control unit connector A (24P).
9. Check for continuity between the following terminals of climate control unit connector A (24P) and the mode control motor 7P connector.

| 24P: | 7P: |
|---|---|
| No. 1 | No. 6 |
| No. 2 | No. 5 |
| No. 3 | No. 4 |
| No. 4 | No. 3 |
| No. 18 | No. 7 |

**CLIMATE CONTROL UNIT CONNECTOR A (24P)**
Wire side of female terminals

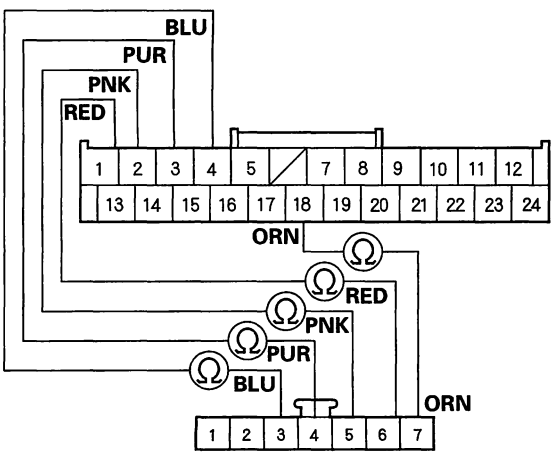


**MODE CONTROL MOTOR 7P CONNECTOR**
Wire side of female terminals

*Is there continuity?*

**YES**—Go to step 10.

**NO**—Repair open in the wire(s) between the climate control unit and the mode control motor.■

(cont'd)

Protected by AR



## DTC Troubleshooting (cont'd)

10. Check for continuity between body ground and climate control unit connector A (24P) terminals No. 1, 2, 3 and 4 individually.

**CLIMATE CONTROL UNIT CONNECTOR A (24P)**

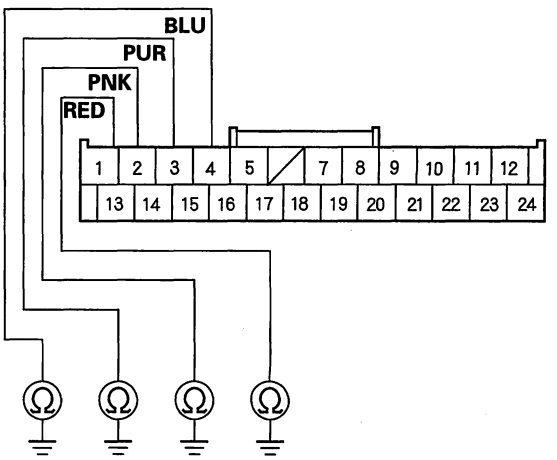


Wire side of female terminals

*Is there continuity?*

**YES**—Repair short to body ground in the wire(s) between the climate control unit and the mode control motor.■

**NO**—Go to step 11.

11. Check for continuity between the terminals of climate control unit connector A (24P) as follows.

| From terminal | To terminals |
|---|---|
| A1 | A2, A3, A4, A18 |
| A2 | A3, A4, A18 |
| A3 | A4, A18 |
| A4 | A18 |

*Is there continuity between any of the terminals?*

**YES**—Repair short in the wire(s) between climate control unit and mode control motor.■

**NO**—Go to step 12.



BACK

Protected by AR

12. Turn the ignition switch ON (II), and check the same terminals for voltage.

**CLIMATE CONTROL UNIT CONNECTOR A (24P)**

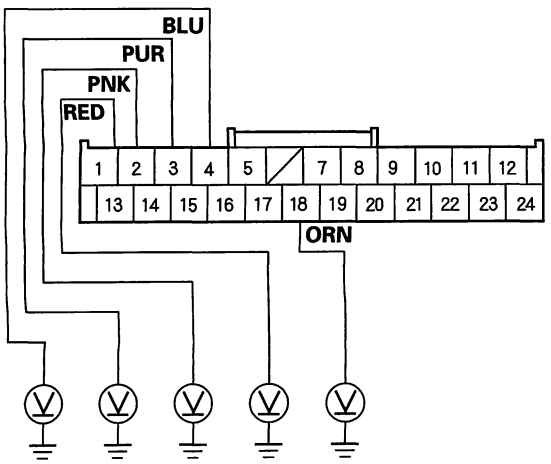


Wire side of female terminals

*Is there any voltage?*

**YES**—Repair short to power in the wire(s) between the climate control unit and the mode control motor.■

**NO**—Check for loose wire or poor connections at climate control unit connector A (24P) and at the mode control motor 7P connector. If the connections are good, substitute a known-good climate control unit and recheck. If the symptom/indication goes away, replace the original climate control unit.■

## **DTC B1240 or DTC indicator B:** A Problem in the Mode Control Linkage, Doors, or Motor

1. Clear the DTC with the HDS.
2. Turn the ignition switch OFF, and then ON (II).
3. Do the self-diagnostic with the HDS (see page 21-8) or climate control unit (see page 21-10).
4. Check for DTCs.

   *Is DTC B1240 or B indicated?*

   **YES**—Go to step 5.

   **NO**—Intermittent failure.■

5. Turn the ignition switch OFF.
6. Test the mode control motor (see page 21-85).

   *Is the mode control motor OK?*

   **YES**—Go to step 7.

   **NO**—Replace the mode control motor (see page 21-86), or repair the mode control linkage or doors.■

7. Disconnect the mode control motor 7P connector.
8. Disconnect climate control unit connector A (24P).

(cont'd)

Protected by AR



## DTC Troubleshooting (cont'd)

9. Check for continuity between the following terminals of climate control unit connector A (24P) and the mode control motor 7P connector.

| 24P: | 7P: |
|---|---|
| No. 7 | No. 2 |
| No. 8 | No. 1 |

**CLIMATE CONTROL UNIT CONNECTOR A (24P)**
Wire side of female terminals

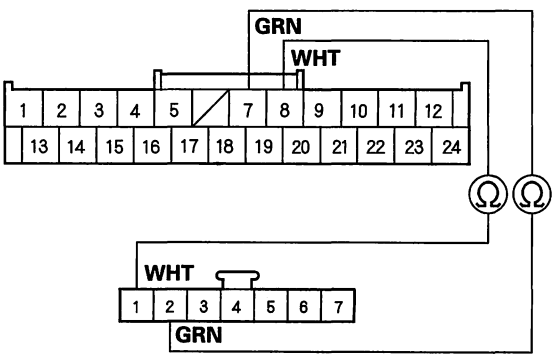


**MODE CONTROL MOTOR 7P CONNECTOR**
Wire side of female terminals

*Is there continuity?*

**YES**—Go to step 10.

**NO**—Repair open in the wire(s) between the climate control unit and the mode control motor.■

10. Check for continuity between body ground and climate control unit connector A (24P) terminals No. 7 and No. 8 individually.

**CLIMATE CONTROL UNIT CONNECTOR A (24P)**

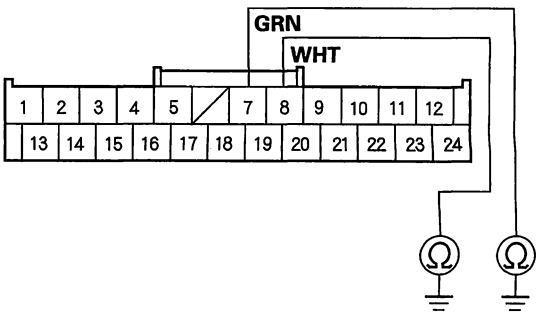


Wire side of female terminals

*Is there continuity?*

**YES**—Repair short to body ground in the wire(s) between the climate control unit and the mode control motor.■

**NO**—Substitute a known-good climate control unit and recheck. If the symptom/indication goes away, replace the original climate control unit.■



BACK

Protected by AR

## **DTC B1241 or DTC indicator F:** A Problem in the Blower Motor Circuit

1. Clear the DTC with the HDS.
2. Turn the ignition switch OFF, and then ON (II).
3. Do the self-diagnostic with the HDS (see page 21-8) or climate control unit (see page 21-10).
4. Check for DTCs.

   *Is DTC B1241 or F indicated?*

   **YES**—Go to step 5.

   **NO**—Intermittent failure, check for loose wires or poor connections on the blower motor circuit.■

5. Turn the ignition switch OFF.
6. Check the No. 9 (40 A) fuse in the under-hood fuse/relay box, and the No. 36 (10 A) fuse in the under-dash fuse/relay box.

   *Are the fuses OK?*

   **YES**—Go to step 7.

   **NO**—Replace the fuses, and recheck.■

7. Connect the blower motor 2P connector terminal No. 2 to body ground with a jumper wire.

**BLOWER MOTOR 2P CONNECTOR**

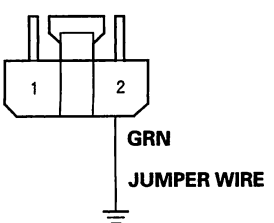


Wire side of female terminals

8. Turn the ignition switch ON (II).

   *Does the blower motor run?*

   **YES**—Go to step 9.

   **NO**—Go to step 25.

9. Turn the ignition switch OFF.
10. Disconnect the jumper wire.
11. Disconnect the power transistor 4P connector.
12. Check for continuity between the No. 2 terminal of the power transistor 4P connector and body ground.

**POWER TRANSISTOR 4P CONNECTOR**

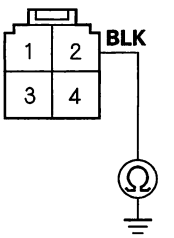


Wire side of female terminals

*Is there continuity?*

**YES**—Go to step 13.

**NO**—Check for an open in the BLK wire between the power transistor and body ground. If the wire is OK, check for poor ground at G571.■

13. Connect the No. 2 and No. 4 terminals of the power transistor 4P connector with a jumper wire.

**POWER TRANSISTOR 4P CONNECTOR**

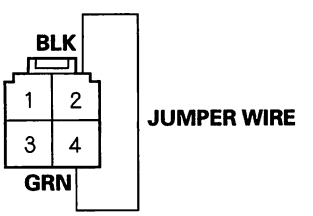


Wire side of female terminals

(cont'd)

Protected by AR



## DTC Troubleshooting (cont'd)

14. Turn the ignition switch ON (II).

    *Does the blower motor run at high speed?*

    **YES**—Go to step 15.

    **NO**—Repair open in the GRN wire between the power transistor and the blower motor. ■

15. Turn the ignition switch OFF.

16. Disconnect the jumper wire.

17. Disconnect the climate control unit connector A (24P).

18. Check for continuity between body ground and the climate control unit connector A (24P) terminals No. 22 and No. 23 individually.

**CLIMATE CONTROL UNIT CONNECTOR A (24P)**

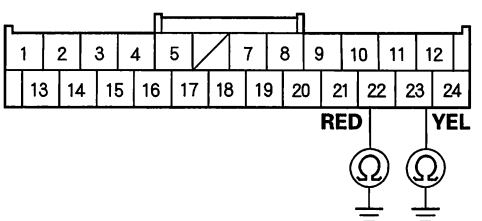


Wire side of female terminals

*Is there continuity?*

**YES**—Repair short to body ground in the wire(s) between the climate control unit and the power transistor. ■

**NO**—Go to step 19.

19. Check for continuity between the following terminals of the climate control unit connector A (24P) and the power transistor 4P connector.

| 24P: | 4P: |
|---|---|
| No. 22 | No. 3 |
| No. 23 | No. 1 |

**CLIMATE CONTROL UNIT CONNECTOR A (24P)**
Wire side of female terminals

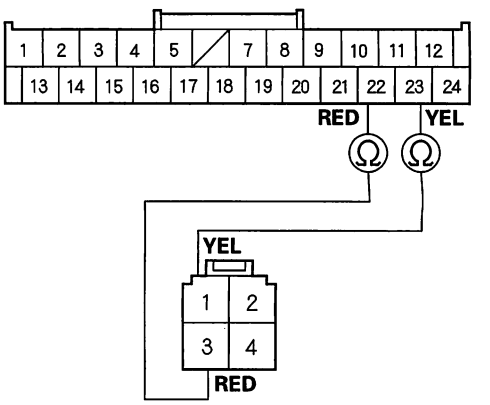


**POWER TRANSISTOR 4P CONNECTOR**
Wire side of female terminals

*Is there continuity?*

**YES**—Go to step 20.

**NO**—Repair open in the wire(s) between the climate control unit and the power transistor. ■



BACK

Protected by AR

20. Turn the ignition switch ON (II).

21. Measure the voltage between body ground and the climate control unit connector A (24P) terminals No. 22 and No. 23 individually.

**CLIMATE CONTROL UNIT CONNECTOR A (24P)**

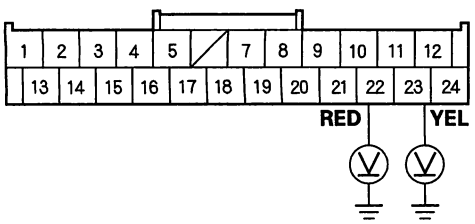


Wire side of female terminals

*Is there voltage?*

**YES**—Repair short to power in the wire(s).■

**NO**—Go to step 22.

22. Turn the ignition switch OFF.

23. Reconnect the climate control unit connector A (24P).

24. Test the power transistor (see page 21-82).

*Is the power transistor OK?*

**YES**—Check for loose wires or poor connections at the climate control unit connector A (24P) and at the power transistor 4P connector. If the connections are good, substitute a known-good climate control unit, and recheck. If the symptom/indication goes away, replace the original climate control unit.■

**NO**—Replace the power transistor.■

25. Disconnect the jumper wire.

26. Disconnect the blower motor 2P connector.

27. Measure the voltage between the blower motor 2P connector terminal No. 1 and body ground.

**BLOWER MOTOR 2P CONNECTOR**

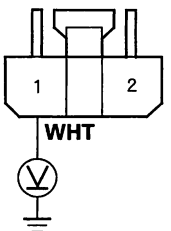


Wire side of female terminals

*Is there battery voltage?*

**YES**—Replace the blower motor.■

**NO**—Go to step 28.

28. Turn the ignition switch OFF.

29. Remove the blower motor relay from the under-hood fuse/relay box, and test it (see page 22-64).

*Is the relay OK?*

**YES**—Go to step 30.

**NO**—Replace the blower motor relay.■

(cont'd)

Protected by AR



## DTC Troubleshooting (cont'd)

30. Check for continuity between the blower motor relay 4P socket terminal No. 2 and blower motor 2P connector terminal No. 1.

**BLOWER MOTOR RELAY 4P SOCKET**

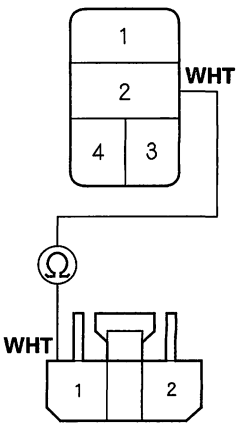


**BLOWER MOTOR 2P CONNECTOR**
Wire side of female terminals

*Is there continuity?*

**YES**—Go to step 31.

**NO**—Repair open in the wire between the blower motor relay and blower motor. ■

31. Measure the voltage between the blower motor relay 4P socket terminal No. 1 and body ground.

**BLOWER MOTOR RELAY 4P SOCKET**

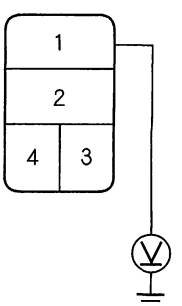


Wire side of female terminals

*Is there battery voltage?*

**YES**—Go to step 32.

**NO**—Replace the under-hood fuse/relay box (see page 22-61). ■

32. Turn the ignition switch ON (II).

33. Measure the voltage between blower motor relay 4P socket terminal No. 3 and body ground.

**BLOWER MOTOR RELAY 4P SOCKET**

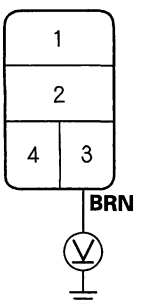


*Is there battery voltage?*

**YES**—Check for an open in the wire between the blower motor relay 4P socket terminal No. 4 and body ground. If the wire is OK, check for poor ground at G202 (see page 22-60). ■

**NO**—Repair open in the wire between the No. 36 (10 A) fuse in the under-dash fuse/relay box and blower motor relay 4P socket. ■



BACK

Protected by AR

## Recirculation Control Motor Circuit Troubleshooting

1. Check the No. 36 (10 A) fuse in the under-dash fuse/relay box.

   *Is the fuse OK?*

   **YES**—Go to step 2.

   **NO**—Replace the fuse, and recheck. If the fuse blows again, check for a short in the No. 36 (10 A) fuse circuit. ■

2. Disconnect the recirculation control motor 7P connector.

3. Turn the ignition switch ON (II).

4. Measure the voltage between the recirculation control motor 7P connector terminal No. 1 and body ground.

**RECIRCULATION CONTROL MOTOR 7P CONNECTOR**

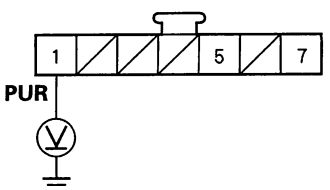


Wire side of female terminals

*Is there battery voltage?*

**YES**—Go to step 5.

**NO**—Repair open in the wire between the No. 36 (10 A) fuse in the under-dash fuse/relay box and the recirculation control motor. ■

5. Turn the ignition switch OFF.

6. Test the recirculation control motor (see page 21-86).

   *Is the recirculation control motor OK?*

   **YES**—Go to step 7.

   **NO**—Replace the recirculation control motor (see page 21-87), or repair the recirculation control linkage or door. ■

7. Disconnect the climate control unit connector A (24P).

8. Check for continuity between body ground and the climate control unit connector A (24P) terminals No. 19 and No. 20 individually.

**CLIMATE CONTROL UNIT CONNECTOR A (24P)**

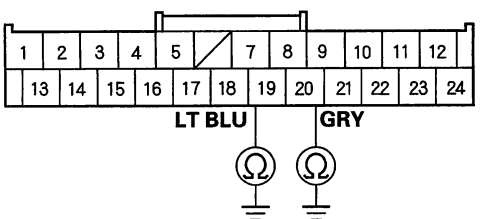


Wire side of female terminals

*Is there continuity?*

**YES**—Repair short to body ground in the wire(s) between the climate control unit and the recirculation control motor. ■

**NO**—Go to step 9.

(cont'd)

Protected by AR



## Recirculation Control Motor Circuit Troubleshooting (cont'd)

9. Turn the ignition switch ON (II), and check the same terminals for voltage to body ground.

**CLIMATE CONTROL UNIT CONNECTOR A (24P)**

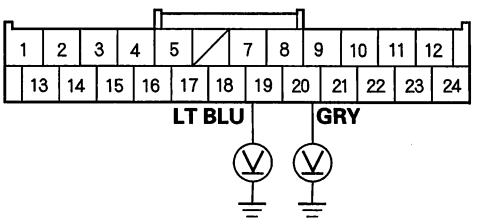


Wire side of female terminals

*Is there any voltage?*

**YES**—Repair short to power in the wire(s) between the climate control unit and the recirculation control motor. This short may also damage the climate control unit. Repair the short to power before replacing the climate control unit.■

**NO**—Go to step 10.

10. Turn the ignition switch OFF.

11. Check for continuity between the following terminals of the climate control unit connector A (24P) and the recirculation control motor 7P connector.

| 24P: | 7P: |
|---|---|
| No. 19 | No. 7 |
| No. 20 | No. 5 |

**CLIMATE CONTROL UNIT CONNECTOR A (24P)**
Wire side of female terminals

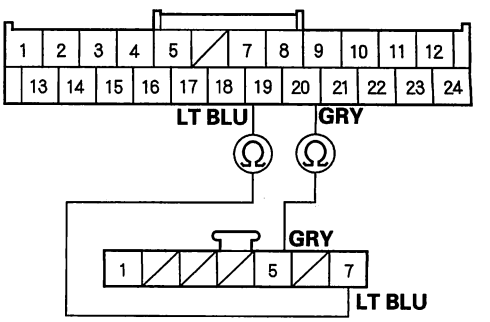


**RECIRCULATION CONTROL MOTOR 7P CONNECTOR**
Wire side of female terminals

*Is there continuity?*

**YES**—Check for loose wires or poor connections at the climate control unit connector A (24P) and at the recirculation control motor 7P connector. If the connections are good, substitute a known-good climate control unit, and recheck. If the symptom/indication goes away, replace the original climate control unit.■

**NO**—Repair open in the wire(s) between the climate control unit and the recirculation control motor.■



BACK

Protected by AR

## Climate Control Power and Ground Circuit Troubleshooting

1. Check the No. 36 (10 A) fuse in the under-dash fuse/relay box.

   *Is the fuse OK?*

   **YES**—Go to step 2.

   **NO**—Replace the fuse, and recheck. If the fuse blows again, check for a short in the No. 36 (10 A) fuse circuit.■

2. Disconnect the climate control unit connector B (16P).

3. Turn the ignition switch ON (II).

4. Measure the voltage between the climate control unit connector B (16P) terminal No. 16 and body ground.

**CLIMATE CONTROL UNIT CONNECTOR B (16P)**

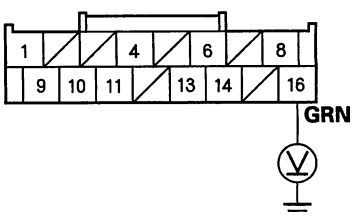


Wire side of female terminals

*Is there battery voltage?*

**YES**—Go to step 5.

**NO**—Repair open in the wire between the No. 36 (10 A) fuse in the under-dash fuse/relay box and the climate control unit.■

5. Turn the ignition switch OFF.

6. Check for continuity between the climate control unit connector A (24P) terminal No. 24 and body ground.

**CLIMATE CONTROL UNIT CONNECTOR A (24P)**

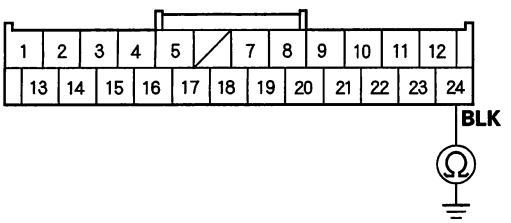


Wire side of female terminals

*Is there continuity?*

**YES**—Check for loose wires and poor connections at the climate control unit connector A (24P). If connections are good, substitute a known-good climate control unit and recheck. If the symptom/indication goes away, replace the original climate control unit.■

**NO**—Check for an open in the wire between the climate control unit and body ground. If the wire is OK, check for poor ground at G571 (see page 22-60).■

Protected by AR



## Navigation Communication Line Circuit Troubleshooting

1. Operate the climate control system in several modes.

   *Is the climate control system OK?*

   **YES**—Go to step 2.

   **NO**—Do the self-diagnostic with the HDS (see page 21-8) or climate control unit (see page 21-10).■

2. Do the Navi system link (see page 23-170).

   *Is the Air-Con or TALK/BACK icon red?*

   **YES**—
   - If Air-con icon is red, go to step 3.
   - If TALK/BACK icon is red, go to "voice control does not work/respond" in the navigation system symptom troubleshooting (see page 23-158).■

   **NO**—Go to step 9.

3. Turn the ignition switch OFF.

4. Disconnect navigation unit connector A (20P).

5. Disconnect the climate control unit connector B (16P).

6. Check for continuity between the following terminals of the climate control unit connector B (16P) and navigation unit connector A (20P).

| 16P: | 20P: |
|---|---|
| No. 1 | No. 14 |
| No. 9 | No. 15 |
| No. 10 | No. 4 |

**CLIMATE CONTROL UNIT CONNECTOR B (16P)**
Wire side of female terminals

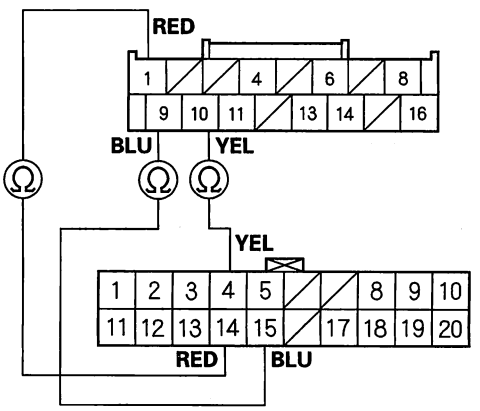


**NAVIGATION UNIT CONNECTOR A (20P)**
Wire side of female terminals

*Is there continuity?*

**YES**—Go to step 7.

**NO**—Repair open in the wire(s) between the climate control unit and the navigation unit.■



BACK

Protected by AR

7. Check for continuity between body ground and the climate control unit connector B (16P) terminals No. 1, 9, and No. 10 individually.

**CLIMATE CONTROL UNIT CONNECTOR B (16P)**

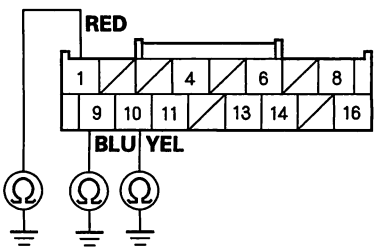


Wire side of female terminals

*Is there continuity?*

**YES**—Repair short to body ground in the wire(s) between the climate control unit and the navigation unit. ■

**NO**—Go to step 8.

8. Reconnect the climate control unit connector B (16P).

9. Disconnect navigation unit connector A (20P).

10. Connect the navigation unit connector A (20P) terminals No. 4, 14 and No. 15 with a jumper wire.

**NAVIGATION UNIT CONNECTOR A (20P)**

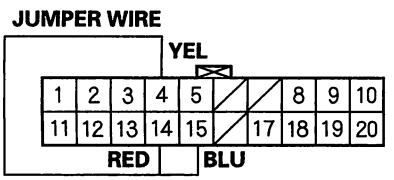


Wire side of female terminals

11. Turn the ignition switch ON (II).

12. Press and hold the AUTO button, then press and hold the OFF button.

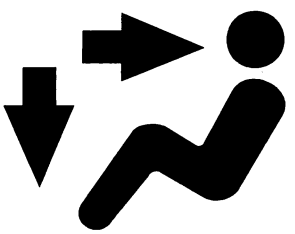

*Is the HEAT/VENT indicator solid with the remaining icons blinking?*

**YES**—Do the Unit check with the navigation system (see page 23-169). ■

**NO**—Substitute a known-good climate control unit, and recheck. If the symptom goes away, replace the original climate control unit. ■

BACK

Protected by AR



## Audio Communication Line Circuit Troubleshooting

1. Turn the ignition switch OFF.

2. Disconnect the climate control unit connector B (16P) and audio unit connector C (28P).

3. Check for continuity between the climate control unit connector B (16P) terminal No. 11 and the audio unit connector C (28P) terminal No. 15.

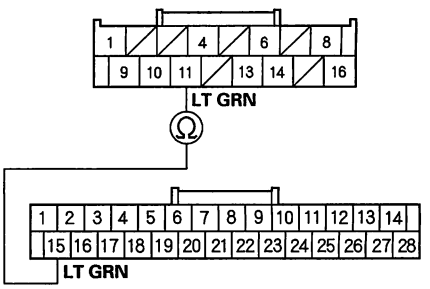


*Is there continuity?*

**YES**—Go to step 4.

**NO**—Repair open in the wire between the climate control unit connector B (16P) and the audio unit connector C (28P).■

4. Check for continuity between the body ground and the climate control unit connector B (16P) terminal No. 11.

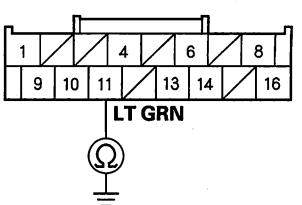


*Is there continuity?*

**YES**—Repair short to body ground in the wire between the climate control unit connector B (16P) and the audio unit connector C (28P).■

**NO**—Go to step 5.

5. Reconnect the climate control unit connector B (16P).

6. Disconnect the in-car temperature sensor 2P connector (see page 21-78).

7. Connect the climate control unit connector B (16P) terminal No. 11 and terminal No. 14 with a jumper wire.

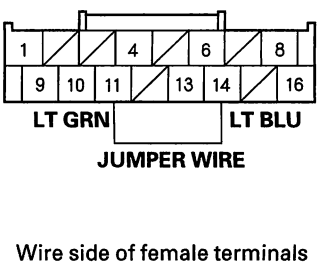


8. Turn the ignition switch ON (II).

9. Press and hold the DEF button and OFF button.

*Is the DEF button LED blinking?*

**YES**—Audio unit is faulty, replace the audio unit (see page 23-99).

**NO**—Climate control unit is faulty, replace the climate control unit (see page 21-88).



BACK

Protected by AR

# Climate Control Switch Communication Line Circuit Troubleshooting

1. Operate the climate control system with the passenger's climate control switch in all modes.

   *Does the climate control system operate?*

   **YES**—Intermittent failure.■

   **NO**—Go to step 2.

2. Operate the climate control system with the driver's climate control switch in all modes.

   *Does the climate control system operate?*

   **YES**—Go to step 3.

   **NO**—Go to step 11.

3. Turn the ignition switch OFF.

4. Disconnect the passenger's climate control switch 12P connector.

5. Turn the ignition switch ON (II).

6. Measure the voltage between body ground and the passenger's climate control switch 12P connector terminal No. 1.

**PASSENGER'S CLIMATE CONTROL SWITCH 12P CONNECTOR**

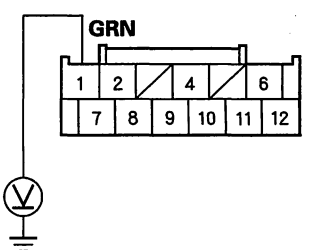


Wire side of female terminals

*Is there battery voltage?*

**YES**—Go to step 7.

**NO**—Repair open in the wire between the passenger's climate control switch and the No. 36 (10 A) fuse in the under-dash fuse/relay box. If wires are OK, replace the under-hood fuse/relay box (see page 22-61).■

7. Turn the ignition switch OFF.

8. Disconnect the driver's climate control switch 16P connector.

9. Check for continuity between passenger's climate control switch 12P conector and the driver's climate control switch 16P connector as shown.

**PASSENGER'S CLIMATE CONTROL SWITCH 12P CONNECTOR**

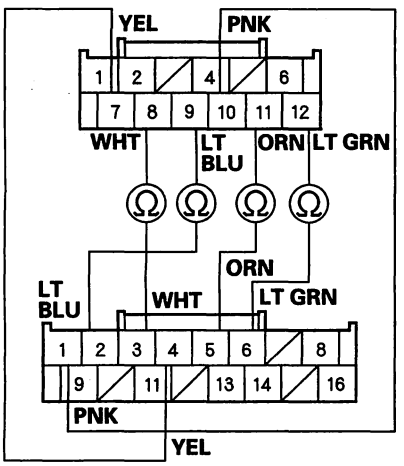


**DRIVER'S CLIMATE CONTROL SWITCH 16P CONNECTOR**
Wire side of female terminals

*Is there continuity?*

**YES**—Go to step 10.

**NO**—Repair open in the wires between the driver's climate control switch and the passenger's climate control switch.■

(cont'd)

Protected by AR



## Climate Control Switch Communication Line Circuit Troubleshooting (cont'd)

10. Check for continuity between body ground and the passenger's climate control switch 12P connector terminals as shown.

**PASSENGER'S CLIMATE CONTROL SWITCH 12P CONNECTOR**

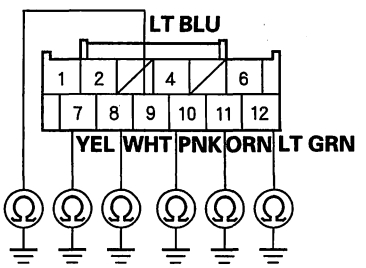


Wire side of female terminals

*Is there continuity?*

**YES**—Repair short to body ground in the wire(s) between the driver's climate control switch and the passenger's climate control switch. ■

**NO**—Substitute a known-good passenger's climate control switch, and recheck. If the symptom goes away, replace the original passenger's climate control switch (see page 21-88). ■

11. Press and hold the FAN UP switch, then press the OFF switch.

*Is the REC button LED blinking?*

**YES**—Substitute a known-good driver's climate control switch, and recheck the function. If the symptom is still present, replace the climate control unit. ■

**NO**—Go to step 12.

12. Check the driver's climate control switch LEDs.

*Are the REC button and AUTO button LEDs blinking?*

**YES**—Driver's climate control switch is faulty, replace the driver's climate control switch (see page 21-88). ■

**NO**—Go to step 13.

13. Check the driver's climate control switch LEDs.

*Are the REC button and DUAL button LEDs blinking?*

**YES**—Substitute a known-good driver's climate control switch, and recheck the function. If the symptom is still present, replace the climate control unit. ■

**NO**—Go to step 14.

14. Turn the ignition switch OFF.



BACK

Protected by AR

15. Disconnect the driver's climate control switch 16P connector.

16. Turn the ignition switch ON (II).

17. Measure the voltage between body ground and the driver's climate control switch 16P connector terminal No. 11.

**DRIVER'S CLIMATE CONTROL SWITCH 16P CONNECTOR**

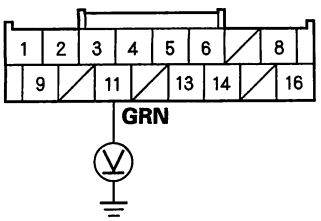


Wire side of female terminals

*Is there battery voltage?*

**YES**—Go to step 18.

**NO**—Repair open in the wire between the driver's climate control switch and the No. 36 (10 A) fuse in the under-dash fuse/relay box. If wires are OK, replace the under-hood fuse/relay box (see page 22-61).■

18. Turn the ignition switch OFF.

19. Check for continuity between body ground and the driver's climate control switch 16P connector terminal No. 14

**DRIVER'S CLIMATE CONTROL SWITCH 16P CONNECTOR**

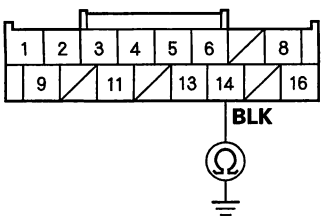


Wire side of female terminals

*Is there continuity?*

**YES**—Go to step 20.

**NO**—Check for an open in the wire between the driver's climate control switch and body ground. If the wire is OK, check for poor ground at G502 (see page 22-60).■

(cont'd)

Protected by AR



## Climate Control Switch Communication Line Circuit Troubleshooting (cont'd)

20. Disconnect the climate control unit connector B (16P).

21. Check for continuity between climate control unit connector B (16P) terminal No. 6 and the driver's climate control switch 16P connector No. 13.

**DRIVER'S CLIMATE CONTROL SWITCH 16P CONNECTOR**
Wire side of female terminals

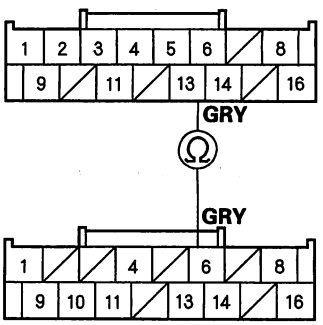


**CLIMATE CONTROL UNIT CONNECTOR B (16P)**
Wire side of female terminals

*Is there continuity?*

**YES**—Go to step 22.

**NO**—Repair open in the wire(s) between the driver's climate control switch and the climate control unit. ■

22. Check for continuity between driver's climate control switch 16P terminal No. 13 and terminal No.14.

**DRIVER'S CLIMATE CONTROL SWITCH 16P CONNECTOR**

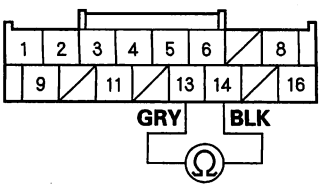


Wire side of female terminals

*Is there continuity?*

**YES**—Repair short to another wire. ■

**NO**—Substitute a known-good driver's climate control switch and recheck. If the symptom is still present, replace the climate control unit. ■



BACK

Protected by AR

# Radiator and A/C Condenser Fan Low Speed Circuit Troubleshooting

NOTE:
- Do not use this troubleshooting procedure if the A/C compressor is inoperative. Refer to the symptom troubleshooting index.
- Before performing symptom troubleshooting, check for powertrain DTCs (see page 11-3).

1. Check the No. 7 (30 A) fuse in the under-hood fuse/relay box, and the No. 36 (10 A) fuse in the under-dash fuse/relay box.

   *Are the fuses OK?*

   **YES**—Go to step 2.

   **NO**—Replace the fuses, and recheck. If the fuses blow again, check for a short in the No. 7 (30 A) and No. 36 (10 A) fuses circuit.■

2. Remove the A/C condenser fan relay from the under-hood fuse/relay box, and test it (see page 22-64).

   *Is the relay OK?*

   **YES**—Go to step 3.

   **NO**—Replace the A/C condenser fan relay.■

3. Connect the HDS to the DLC (see page 21-8).

4. Turn the ignition switch ON (II).

5. Turn on the A/C.

6. Check the FAN LOW CTRL in the PGM-FI Data List with the HDS.

   *Is the FAN LOW CTRL on?*

   **YES**—Go to step 7.

   **NO**—Substitute a known-good PCM (see page 11-8), and retest. If the symptom/indication goes away with a known-good PCM, replace the original PCM (see page 11-252).■

7. Measure the voltage between the A/C condenser fan relay 4P socket terminal No. 1 and body ground.

**A/C CONDENSER FAN RELAY 4P SOCKET**

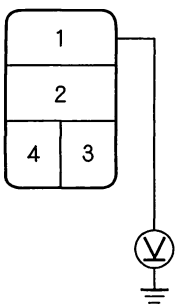


*Is there battery voltage?*

**YES**—Go to step 8.

**NO**—Replace the under-hood fuse/relay box (see page 22-61).■

8. Connect the A/C condenser fan relay 4P socket terminals No. 1 and No. 2 with a jumper wire.

**A/C CONDENSER FAN RELAY 4P SOCKET**

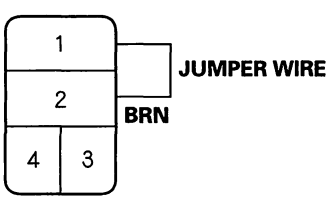


*Does the A/C condenser and radiator fans run on low?*

**YES**—Go to step 9.

**NO**—Go to step 18.

(cont'd)

Protected by AR



## Radiator and A/C Condenser Fan Low Speed Circuit Troubleshooting (cont'd)

9. Disconnect the jumper wire.

10. Turn the ignition switch ON (II).

11. Measure the voltage between the A/C condenser fan relay 4P socket terminal No. 3 and body ground.

**A/C CONDENSER FAN RELAY 4P SOCKET**

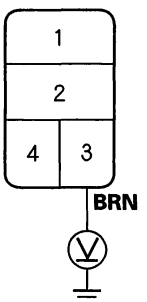


*Is there battery voltage?*

**YES**—Go to step 12.

**NO**—Go to step 36.

12. Turn the ignition switch OFF.

13. Reinstall the A/C condenser fan relay.

14. Jump the SCS line with the HDS.

    NOTE: This step must be done to protect the powertrain control module (PCM) from damage.

15. Disconnect PCM connector A (44P).

16. Connect the PCM connector A (44P) terminal No. 4 to body ground with a jumper wire.

**PCM CONNECTOR A (44P)**

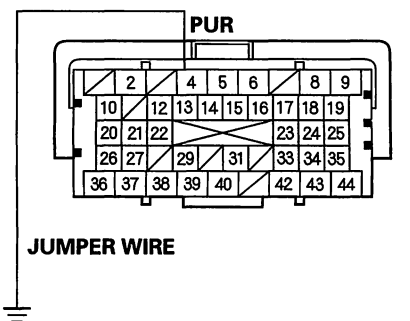


Terminal side of female terminals

17. Turn the ignition switch ON (II).

    *Do the A/C condenser and radiator fans run on low?*

    **YES**—Check for loose wires or poor connections at PCM connector A (44P) terminal No. 4. If the connections are good, substitute a known-good PCM, and recheck. If the symptom/indication goes away, replace the original PCM (see page 11-252). ■

    **NO**—Repair open in the wire between the A/C condenser fan relay and the PCM. ■

18. Disconnect the jumper wire.

19. Reinstall the A/C condenser fan relay.

20. Disconnect the A/C condenser fan 2P connector.

21. Turn the ignition switch ON (II), then set the A/C button and fan control button ON.



BACK

Protected by AR

22. Measure the voltage between the A/C condenser fan 2P connector terminal No. 2 and body ground.

**A/C CONDENSER FAN 2P CONNECTOR**

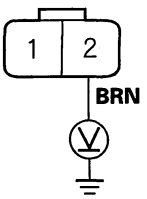


Wire side of female terminals

*Is there battery voltage?*

**YES**—Go to step 23.

**NO**—Repair open in the wire between the A/C condenser fan relay and the A/C condenser fan. ■

23. Set the A/C button and fan control dial OFF, then turn the ignition switch OFF.

24. Reconnect the A/C condenser fan 2P connector.

25. Connect the A/C condenser fan 2P connector terminal No. 1 to body ground with a jumper wire.

**A/C CONDENSER FAN 2P CONNECTOR**

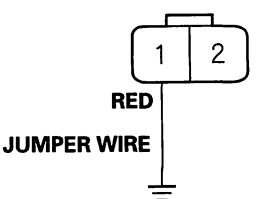


Wire side of female terminals

26. Turn the ignition switch ON (II), then set the A/C button and fan control button ON.

*Does the A/C condenser fan run?*

**YES**—Go to step 26.

**NO**—Replace the A/C condenser fan motor (see page 10-16). ■

27. Set the A/C button and fan control dial to OFF, then turn the ignition switch OFF.

28. Disconnect the jumper wire.

29. Remove the fan control relay from the under-hood relay box, and test it (see page 22-64).

*Is the relay OK?*

**YES**—Go to step 30.

**NO**—Replace the fan control relay. ■

30. Turn the ignition switch ON (II), then set the A/C button and fan control button ON.

31. Measure the voltage between the fan control relay 5P socket terminal No. 1 and body ground.

**FAN CONTROL RELAY 5P SOCKET**

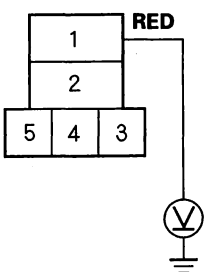


*Is there battery voltage?*

**YES**—Go to step 32.

**NO**—Repair open in the wire between the A/C condenser fan and the fan control relay. ■

32. Set the A/C button and fan control button OFF, then turn the ignition switch OFF.

(cont'd)

Protected by AR



## Radiator and A/C Condenser Fan Low Speed Circuit Troubleshooting (cont'd)

33. Disconnect the radiator fan 2P connector.

34. Check for continuity between the fan control relay 5P socket terminal No. 4 and the radiator fan 2P connector terminal No. 2.

**FAN CONTROL RELAY 5P SOCKET**

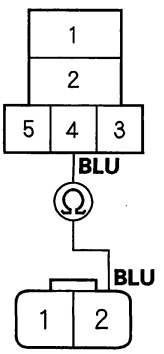


**RADIATOR FAN 2P CONNECTOR**
Wire side of female terminals

*Is there continuity?*

**YES**—Go to step 35.

**NO**—Repair open in the wire between the fan control relay and the radiator fan.■

35. Check for continuity between the radiator fan 2P connector terminal No. 1 and body ground.

**RADIATOR FAN 2P CONNECTOR**

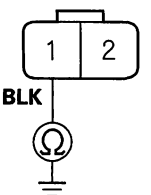


Wire side of female terminals

*Is there continuity?*

**YES**—Replace the radiator fan motor (see page 10-16).■

**NO**—Check for an open in the wire between the radiator fan and body ground. If the wire is OK, check for poor ground at G201 (see page 22-60).■



BACK

Protected by AR

36. Turn the ignition switch OFF.

37. Remove A/C diode A from the under-hood fuse/relay box.

38. Using the diode setting (⊸|◀⊸) on a DVOM, check for current flow in both directions between the A/C diode A terminals No. 1 and No. 2.

**A/C DIODE A**

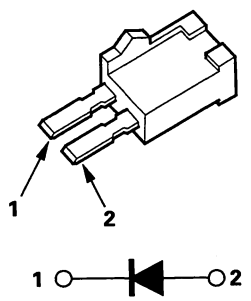


*Is there current flow in only one direction?*

**YES**—Go to step 39.

**NO**—Replace A/C diode A.■

39. Turn the ignition switch ON (II).

40. Measure the voltage between the A/C diode A 2P socket terminal No. 2 and body ground.

**A/C DIODE A 2P SOCKET**

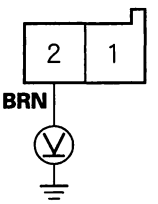


*Is there battery voltage?*

**YES**—Replace the under-hood fuse/relay box (see page 22-65).■

**NO**—Repair open in the wire between the No. 36 (10 A) fuse in the under-dash fuse/relay box and A/C diode A.■

Protected by AR



## A/C Condenser Fan High Speed Circuit Troubleshooting

NOTE:
- Do not use this troubleshooting procedure if the radiator fan and/or the A/C compressor is inoperative. Refer to the symptom troubleshooting index.
- Before performing symptom troubleshooting, check for powertrain DTCs (see page 11-3).

1. Check the No. 36 (10 A) fuse in the under-dash fuse/relay box.

   *Is the fuse OK?*

   **YES**—Go to step 2.

   **NO**—Replace the fuse, and recheck.■

2. Remove the fan control relay from the under-hood relay box, and test it (see page 22-65).

   *Is the relay OK?*

   **YES**—Go to step 3.

   **NO**—Replace the fan control relay.■

3. Turn the ignition switch ON (II).

4. Measure the voltage between the fan control relay 5P socket terminal No. 5 and body ground.

**FAN CONTROL RELAY 5P SOCKET**

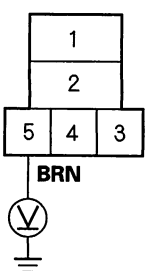


*Is there battery voltage?*

**YES**—Go to step 5.

**NO**—Go to step 12.

5. Turn the ignition switch OFF.

6. Check for continuity between the fan control relay 5P socket terminal No. 2 and body ground.

**FAN CONTROL RELAY 5P SOCKET**

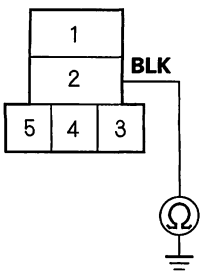


*Is there continuity?*

**YES**—Go to step 7.

**NO**—Check for an open in the wire between the fan control relay and body ground. If the wire is OK, check for poor ground at G202.■



BACK

Protected by AR

7. Jump the SCS line with the HDS.

   NOTE: This step must be done to protect the powertrain control module (PCM) from damage.

8. Disconnect PCM connector A (44P).

9. Check for continuity between the fan control relay 5P socket terminal No. 3 and PCM connector A (44P) terminal No. 5.

**FAN CONTROL RELAY 5P SOCKET**

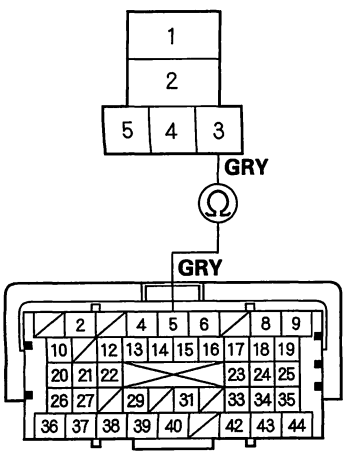


**PCM CONNECTOR A (44P)**
Terminal side of female terminals

*Is there continuity?*

**YES**—Go to step 10.

**NO**—Repair open in the wire between the fan control relay and the PCM.■

10. Reconnect PCM connector A (44P).

11. Check the DTCs by selecting the DTC MENU (DTCs) from the HDS (see page 11-3).

    *Is DTC P0532, P0533, P2184 and/or P2185 indicated?*

    **YES**—
    - DTC P0532 indicated: Go to A/C pressure sensor circuit low voltage troubleshooting (see page 11-327).■
    - DTC P0533 indicated: Go to A/C pressure sensor circuit high voltage troubleshooting (see page 11-329).■
    - DTC P2184 indicated: Go to ECT 2 sensor circuit low voltage troubleshooting (see page 11-188).■
    - DTC P2185 indicated: Go to ECT 2 sensor circuit high voltage troubleshooting (see page 11-190). ■

    **NO**—Check for loose wires or poor connections at PCM connector A (44P). If the connections are good, substitute a known-good PCM, and recheck. If the symptom/indication goes away, replace the original PCM (see page 11-252).■

(cont'd)

Protected by AR



## A/C Condenser Fan High Speed Circuit Troubleshooting (cont'd)

12. Turn the ignition switch OFF.

13. Remove A/C diode A from the under-hood fuse/relay box.

14. Using the diode setting (⊸|◀⊸) on a DVOM, check for current flow in both directions between the A/C diode A terminals No. 1 and No. 2.

**A/C DIODE A**

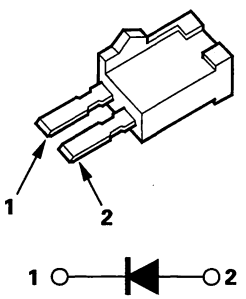


*Is there current flow in only one direction?*

**YES**—Go to step 15.

**NO**—Replace A/C diode A.■

15. Turn the ignition switch ON (II).

16. Measure the voltage between the A/C diode A 2P socket terminal No. 2 and body ground.

**A/C DIODE A 2P SOCKET**

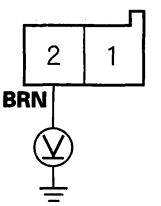


*Is there battery voltage?*

**YES**—Replace the under-hood fuse/relay box (see page 22-61).■

**NO**—Repair open in the wire between the No. 36 (10 A) fuse in the under-dash fuse/relay box and A/C diode A.■



BACK

Protected by AR

## A/C Compressor Clutch Circuit Troubleshooting

NOTE:
- The PCM can turn the A/C compressor OFF under certain conditions, such as low idle, high engine coolant temperature, or hard acceleration.
- Do not use this troubleshooting procedure if the fans are also inoperative with the A/C on. Refer to the symptom troubleshooting index.
- Before doing any symptom troubleshooting, check for powertrain DTCs (see page 11-3).

1. Check the No. 20 (7.5 A) fuse in the under-hood fuse/relay box, and the No. 36 (10 A) fuse in the under-dash fuse/relay box.

   *Are the fuses OK?*

   **YES**—Go to step 2.

   **NO**—Replace the fuse(s), and recheck. ■

2. Connect the HDS to the DLC.

3. Check for these PGM-FI DTCs: P0117, P0118, P0506, P0507, P0532, and P0533.

   *Are any of these DTCs indicated?*

   **YES**—Go to the appropriate troubleshooting section.

   **NO**—Go to step 4.

4. Start the engine.

5. Turn on the A/C.

6. Check the A/C CLUTCH in the PGM-FI Data List with the HDS.

   *Is the A/C CLUTCH on?*

   **YES**—Go to step 8.

   **NO**—Go to step 7.

7. Using the HDS, confirm the following values in the PGM-FI Data List at idle.

| | |
|---|---|
| TP SENSOR | About 0.5 V |
| RPM | 650±50—720±50 |
| A/C TEMPERATURE | 39—230 Degrees °F |
| A/C SWITCH | ON |
| A/C CLUTCH | ON |
| A/C PRESSURE SENSOR | 196—3,138 kPa (2—32 kgf/cm²) [28—455 psi] |

   *Are all the values within specifications?*

   **YES**—Go to step 8.

   **NO**—Troubleshoot the value that is not within the specifications. ■

(cont'd)

Protected by AR



## A/C Compressor Clutch Circuit Troubleshooting (cont'd)

8. Remove the A/C compressor clutch relay from the under-hood fuse/relay box, and test it (see page 22-64).

   *Is the relay OK?*

   **YES**—Go to step 9.

   **NO**—Replace the A/C compressor clutch relay.■

9. Measure the voltage between the A/C compressor clutch relay 4P socket terminal No. 1 and body ground.

**A/C COMPRESSOR CLUTCH RELAY 4P SOCKET**

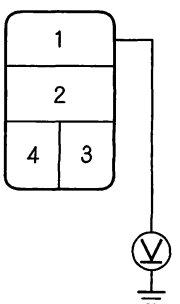


*Is there battery voltage?*

**YES**—Go to step 10.

**NO**—Replace the under-hood fuse/relay box (see page 22-61).■

10. Connect the A/C compressor clutch relay 4P socket terminals No. 1 and No. 2 with a jumper wire.

**A/C COMPRESSOR CLUTCH RELAY 4P SOCKET**

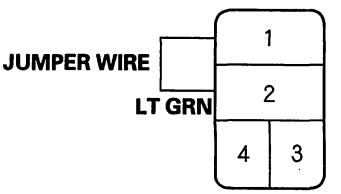


*Does the A/C compressor clutch click?*

**YES**—Go to step 11.

**NO**—Go to step 20.

11. Disconnect the jumper wire.

12. Turn the ignition switch ON (II).

13. Measure the voltage between the A/C compressor clutch relay 4P socket terminal No. 3 and body ground.

**A/C COMPRESSOR CLUTCH RELAY 4P SOCKET**

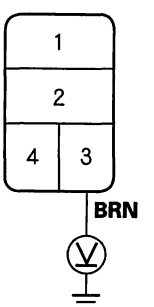


*Is there battery voltage?*

**YES**—Go to step 14.

**NO**—Repair open in the wire between the No. 36 (10 A) fuse in the under-dash fuse/relay box and the A/C compressor clutch relay.■



BACK

Protected by AR

14. Turn the ignition switch OFF.

15. Reinstall the A/C compressor clutch relay.

16. Jump the SCS line with the HDS.

    NOTE: This step must be done to protect the powertrain control module (PCM) from damage.

17. Disconnect PCM connector A (44P).

18. Connect the PCM connector A (44P) terminal No. 14 to body ground with a jumper wire.

**PCM CONNECTOR A (44P)**

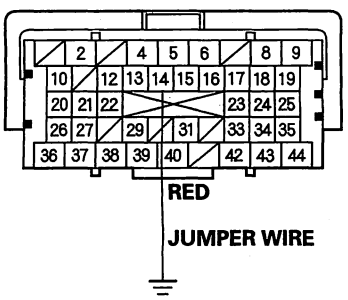


Terminal side of female terminals

19. Turn the ignition switch ON (II).

    *Does the A/C compressor click?*

    **YES**—Check for loose wires or poor connections at PCM connector A (44P). If the connections are good, check the PCM grounds. If the grounds are good, substitute a known-good PCM, and recheck. If the symptom/indication goes away, replace the original PCM (see page 11-252).■

    **NO**—Repair open in the wire between the A/C compressor clutch relay and the PCM.■

20. Disconnect the jumper wire.

21. Disconnect the A/C compressor clutch 3P connector.

22. Check for continuity between the A/C compressor clutch relay 4P socket terminal No. 2 and the A/C compressor clutch 3P connector terminal No. 3.

**A/C COMPRESSOR CLUTCH RELAY 4P SOCKET**

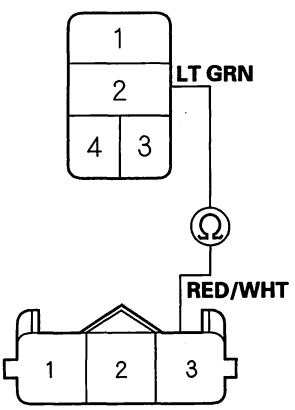


**A/C COMPRESSOR CLUTCH 3P CONNECTOR**
Terminal side of male terminals

*Is there continuity?*

**YES**—Check the A/C compressor clutch clearance, A/C compressor clutch field coil, and the A/C compressor thermal protector (see page 21-102). Repair as needed.■

**NO**—Repair open in the wire between the A/C compressor clutch relay and the A/C compressor clutch.■

BACK

Protected by AR



## A/C Signal Circuit Troubleshooting

NOTE:
- Do not use this troubleshooting procedure if any of the following items are operative: A/C condenser fan, radiator fan, A/C compressor. Refer to the symptom troubleshooting index.
- Before doing any symptom troubleshooting, check for powertrain DTCs (see page 11-3).

1. Connect the HDS to the DLC.

2. Start the engine.

3. Turn on the A/C.

4. Check the blower motor operates at all speeds.

   *Does the blower motor operate at all speeds?*

   **YES**—Go to step 5.

   **NO**—Repair the problem in the blower motor circuit (see page 21-51).■

5. Check the A/C SWITCH in the PGM-FI Data List with the HDS.

   *Is the A/C SWITCH on?*

   **YES**—The A/C signal is OK at this time.■

   **NO**—Go to step 6.

6. Turn the ignition switch OFF.

7. Disconnect the climate control unit connector A (24P).

8. Measure the evaporator temperature sensor resistance between the climate control unit connector A (24P) terminals No. 13 and No. 18.

**CLIMATE CONTROL UNIT CONNECTOR A (24P)**

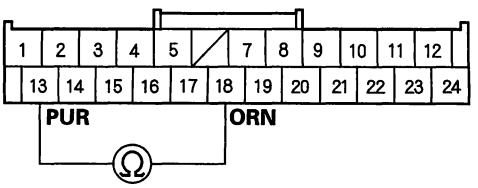


Wire side of female terminals

*Is the resistance less than 24 kΩ ?*

**YES**—Go to step 9.

**NO**—Test the evaporator temperature sensor (see page 21-81).■



BACK

Protected by AR

9. Turn the ignition switch ON (II).

10. Measure the voltage between the climate control unit connector A (24P) terminal No. 17 and body ground.

**CLIMATE CONTROL UNIT CONNECTOR A (24P)**

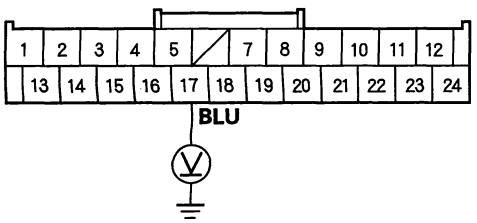


Wire side of female terminals

*Is there battery voltage?*

**YES**—Go to step 11.

**NO**—Repair open in the wire between the climate control unit and the MICU.■

11. Turn the ignition switch OFF.

12. Reconnect the climate control unit connector A (24P).

13. Set the A/C button and fan control switch to ON, then turn the ignition switch ON (II).

14. Measure the voltage between the climate control unit connector A (24P) terminal No. 17 and body ground.

**CLIMATE CONTROL UNIT CONNECTOR A (24P)**

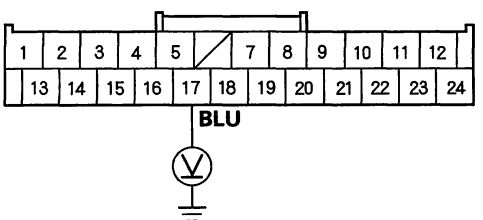


Wire side of female terminals

*Is there 0.5 V or less?*

**YES**—Replace the MICU (see page 22-62).■

**NO**—Check for loose wires or poor connections at the climate control unit connector A (24P). If the connections are good, substitute a known-good climate control unit and recheck. If the symptom/indication goes away, replace the original climate control unit.■

BACK

Protected by AR



## In-car Temperature Sensor Test

1. Remove the in-car temperature sensor (see page 21-78).

2. Test the in-car temperature sensor while holding it in front of the dashboard center vent

   - Measure the resistance with the system set to Max Cool.
   - Measure the resistance with the system set to Max Hot.

3. Compare the resistance reading between the No. 1 and No. 2 terminals of the in-car temperature sensor with the specifications shown in the graph; the resistance should be within the specifications for whatever the ambient temperature is.

**IN-CAR TEMPERATURE SENSOR**

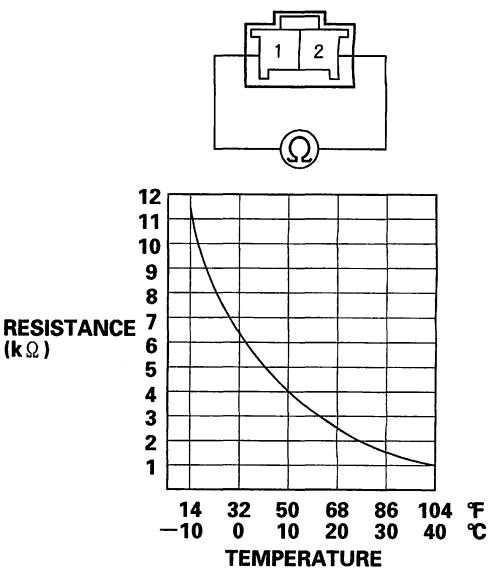


4. If the resistance is not as specified, replace the in-car temperature sensor (see page 21-78).

## In-car Temperature Sensor Replacement

1. Remove the driver's dashboard undercover (see page 20-102).

2. Remove the self-tapping screw and the in-car temperature sensor (A) from the instrument panel (B).

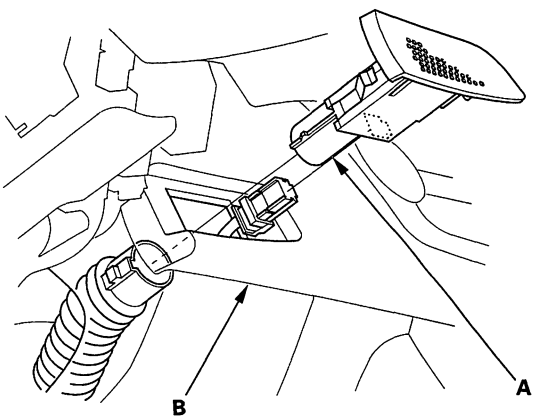


3. Install the sensor in the reverse order of removal. Be sure to connect the air hose securely.



BACK

Protected by AR

## Outside Air Temperature Sensor Test

1. Remove the outside air temperature sensor (see page 21-79).

2. Dip the sensor in ice water, and measure the resistance. Then pour warm water on the sensor, and check for a change in resistance.

3. Compare the resistance reading between the No. 1 and No. 2 terminals of the outside air temperature sensor with the specifications shown in the graph; the resistance should be within the specifications.

**OUTSIDE AIR TEMPERATURE SENSOR**

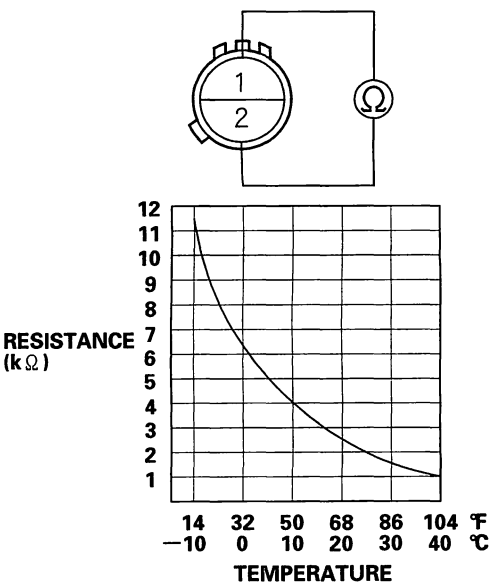


4. If the resistance is not as specified, replace the outside air temperature sensor (see page 21-79).

## Outside Air Temperature Sensor Replacement

1. Remove the front bumper (see page 20-146).

2. Lift the tab (A) to release the lock, then remove the outside air temperature sensor (B) from the front bumper beam. Disconnect the 2P connector (C) from the outside air temperature sensor.

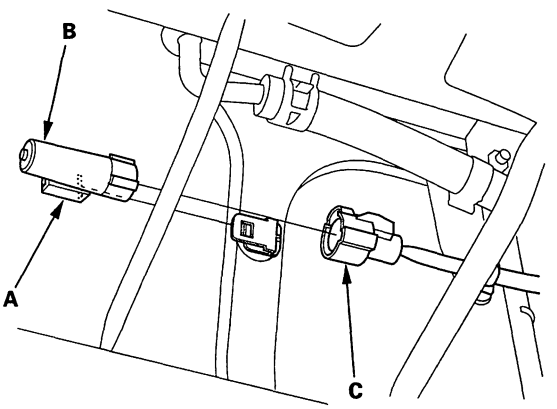


3. Install the sensor in the reverse order of removal.

BACK

Protected by AR



## Sunlight Sensor Test

1. Remove the sunlight sensor (see page 21-80).

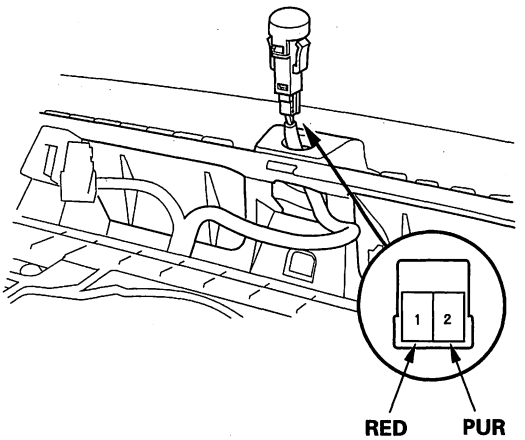


2. Turn the ignition switch ON (II). Measure the voltage between the terminals with the (+) probe on the No. 1 terminal and the (—) probe on the No. 2 terminal with the connector connected.

   NOTE: The voltage readings will not change under the light of a flashlight or a fluorescent lamp.

   Voltage should be:
   - 3.6—3.7 V or more with the sensor out of direct sunlight.
   - 3.3—3.5 V or less with the sensor in direct sunlight.

3. If the voltage is not as specified, replace the sunlight sensor (see page 21-80).

## Sunlight Sensor Replacement

1. Remove the dashboard center upper panel (see page 20-105). With navigation, remove the audio-HVAC subdisplay unit (see page 23-101).

2. Remove the sunlight sensor (A) from the dashboard, then disconnect the connector (B). Be careful not to damage the sensor and the dashboard.

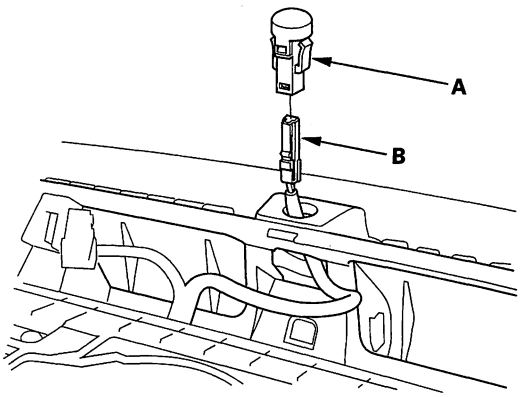


3. Install the sensor in the reverse order of removal.



BACK

Protected by AR

## Evaporator Temperature Sensor Test

1. Remove the evaporator temperature sensor (see page 21-92).

2. Dip the sensor in ice water, and measure the resistance between its terminals.

**EVAPORATOR TEMPERATURE SENSOR**

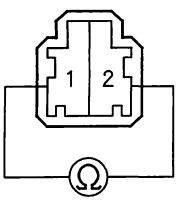


Terminal side of male terminals

3. Then pour warm water on the sensor, and check for a change in resistance.

4. Compare the resistance readings with the specifications shown in the graph; the resistance should be within the specifications.

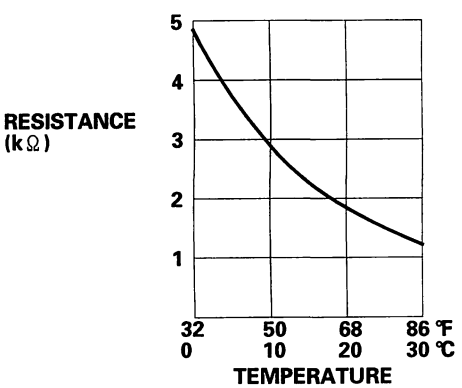


5. If the resistance is not as specified, replace the evaporator temperature sensor (see page 21-92).

## Power Transistor Replacement

1. Remove the passenger's dashboard undercover (see page 20-103).

2. Remove the glove box (see page 20-104).

3. Disconnect the 4P connector (A) from the power transistor (B), then remove the screws.

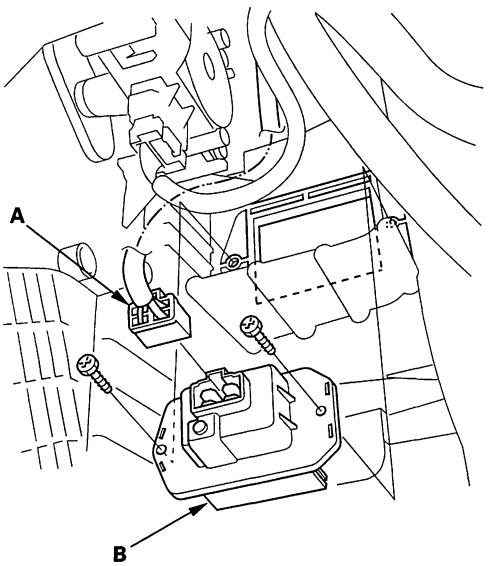


4. Pull out the power transistor from the expansion valve cover.

5. Install the power transistor in the reverse order of removal.

Protected by AR



## Power Transistor Test

1. Disconnect the 4P connector from the power transistor.

2. Measure the resistance between the No. 3 and No. 4 terminals of the power transistor. It should be about 1.5 kΩ.

   - If the resistance is within the specifications, go to step 3.
   - If the resistance is not within the specifications, replace the power transistor.

   NOTE: Also check the blower motor. Power transistor failure can be caused by a defective blower motor.

**POWER TRANSISTOR**

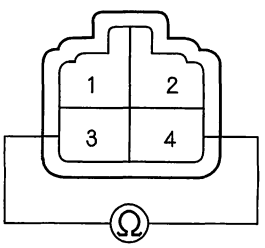


3. Carefully release the lock tab on the No. 1 terminal (YEL) (A) in the 4P connector, then remove the terminal and insulate it from body ground.

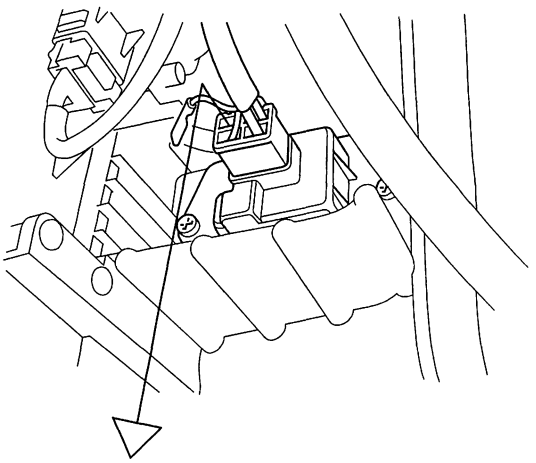

**(To 12V power source on vehicle)**

4. Reconnect the 4P connector to the power transistor.

5. Make sure the YEL wire is completely isolated, then supply 12 V to the No. 1 cavity with a jumper wire.

6. Turn the ignition switch ON (II), and check that the blower motor runs.

   - If the blower motor does not run, replace the power transistor.

     NOTE: A faulty blower motor can cause the power transistor to fail. If the power transistor is replaced, also check the blower motor for binding, and replace it if necessary.

   - If the blower motor runs, the power transistor is OK.



BACK

Protected by AR

## Driver's Air Mix Control Motor Test

**Special Tools Required**
Backprobe Set 07SAZ-001000A

NOTE: Before testing, check for HVAC DTCs (see page 21-8).

1. Disconnect the 7P connector from the driver's air mix control motor.

   **NOTICE**
   Incorrectly applying power and ground to the driver's air mix control motor will damage it. Follow the instructions carefully.

2. Connect battery power to the No. 1 terminal of the driver's air mix control motor, and ground the No. 2 terminal; the driver's air mix control motor should run, and stop at Max Cool. If it doesn't, reverse the connections; the driver's air mix control motor should run, and stop at Max Hot. When the driver's air mix control motor stops running, disconnect battery power immediately.

3. If the driver's air mix control motor did not run in step 2, remove it, then check the driver's air mix control linkage and the door for smooth movement.

   - If the linkage and door move smoothly, replace the driver's air mix control motor (see page 21-83).
   - If the linkage or door sticks or binds, repair them as needed.
   - If the driver's air mix control motor runs smoothly, go to step 4.

4. Measure the resistance between the No. 5 and No. 7 terminals. It should be between 4.2 to 7.8 kΩ.

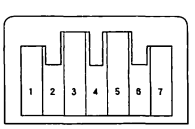


5. Reconnect the driver's air mix control motor 7P connector, then turn the ignition switch ON (II).

6. Using the backprobe set, measure the voltage between the No. 3 and No. 7 terminals.

   **Max Cool—about 1.5 V**
   **Max Hot—about 4.5 V**

7. If either the resistance or voltage readings are not as specified, replace the driver's air mix control motor (see page 21-83).

## Driver's Air Mix Control Motor Replacement

1. Remove the driver's dashboard lower cover, then remove the driver's dashboard undercover (see page 20-102).

2. Disconnect the 7P connector (A) from the driver's air mix control motor (B). Remove the self-tapping screws and the driver's air mix control motor from the heater unit.

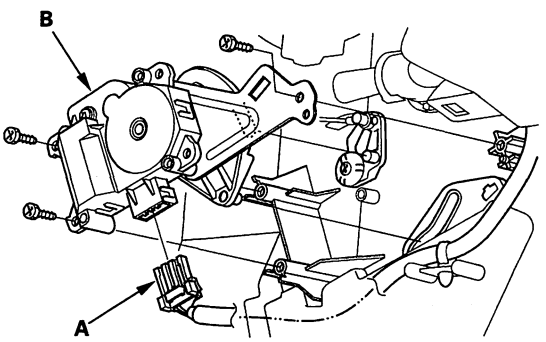


3. Install the motor in the reverse order of removal. Make sure the pin on the motor is properly engaged with the linkage. After installation, make sure the motor runs smoothly.

BACK

Protected by AR



## Passenger's Air Mix Control Motor Test

**Special Tools Required**
Backprobe Set 07SAZ-001000A

NOTE: Before testing, check for HVAC DTCs (see page 21-8).

1. Disconnect the 7P connector from the passenger's air mix control motor.

   **NOTICE**
   Incorrectly applying power and ground to the passenger's air mix control motor will damage it. Follow the instructions carefully.

2. Connect battery power to the No. 1 terminal of the passenger's air mix control motor, and ground the No. 2 terminal; the passenger's air mix control motor should run, and stop at Max Cool. If it doesn't, reverse the connections; the passenger's air mix control motor should run, and stop at Max Hot. When the passenger's air mix control motor stops running, disconnect battery power immediately.

3. If the passenger's air mix control motor did not run in step 2, remove it, then check the passenger's air mix control linkage and door for smooth movement.

   - If the linkage and door move smoothly, replace the passenger's air mix control motor (see page 21-85).
   - If the linkage or door sticks or binds, repair them as needed.
   - If the passenger's air mix control motor runs smoothly, go to step 4.

4. Measure the resistance between the No. 5 and No. 7 terminals. It should be between 4.2 to 7.8 kΩ.

**PASSENGER'S AIR MIX CONTROL MOTOR**

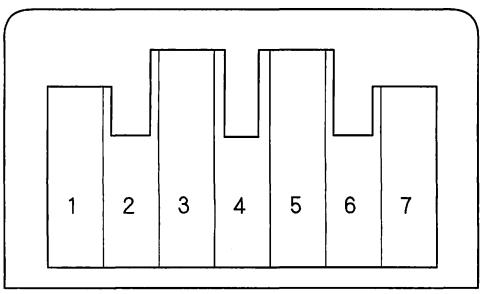


5. Reconnect the passenger's air mix control motor 7P connector, then turn the ignition switch ON (II).

6. Using the backprobe set, measure the voltage between the No. 3 and No. 5 terminals.

   **Max Cool—about 1.5 V**
   **Max Hot—about 4.5 V**

7. If either the resistance or the voltage readings are not as specified, replace the passenger's air mix control motor (see page 21-85).



BACK

Protected by AR

## Passenger's Air Mix Control Motor Replacement

1. Remove the glove box. (see page 20-104).
2. Remove the climate control unit (see page 21-88).

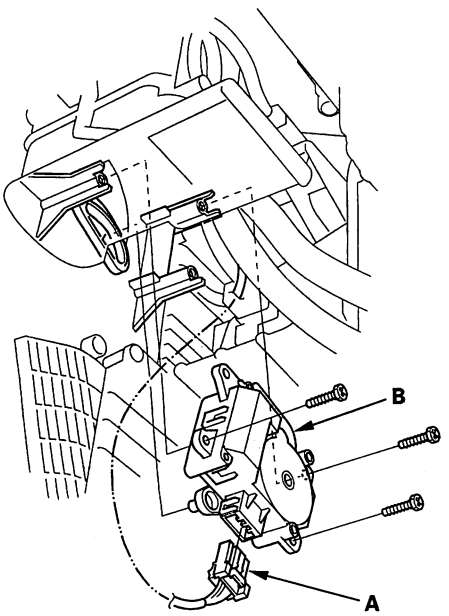


3. Disconnect the connector (A) from the passenger's air mix control motor, then remove the self-tapping screws and the passenger's air mix control motor (B) from the heater unit.
4. Install the motor in the reverse order of removal. Make sure the pin on the motor is properly engaged with the linkage. After installation, make sure the motor runs smoothly.

## Mode Control Motor Test

NOTE: Before testing, check for HVAC DTCs (see page 21-8).

1. Disconnect the 7P connector from the mode control motor.

**NOTICE**
Incorrectly applying power and ground to the mode control motor will damage it. Follow the instructions carefully.

2. Connect battery power to the No. 1 terminal of the mode control motor, and ground the No. 2 terminal; the mode control motor should run smoothly, and stop at Defrost. If it doesn't, reverse the connections; the mode control motor should run smoothly, and stop at Vent. When the mode control motor stops running, disconnect battery power immediately.

MODE CONTROL MOTOR

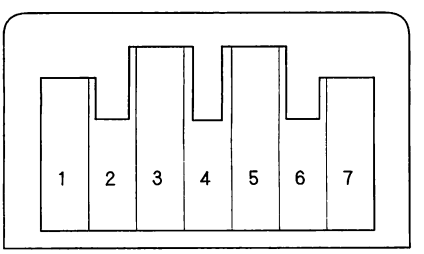


3. If the mode control motor did not run in step 2, remove it, then check the mode control linkage and doors for smooth movement.
   - If the linkage and doors move smoothly, replace the mode control motor (see page 21-86).
   - If the linkage or doors stick or bind, repair them as needed.
   - If the mode control motor runs smoothly, go to step 4.
4. Use a digital multimeter with an output of 1 mA or less at the 20 kΩ range. With the mode control motor running as in step 2, check for continuity between the No. 3, 4, 5, and 6 terminals and the No. 7 terminal individually. There should be continuity for a moment at each terminal as the motor moves past the switch's terminal.
5. If there is no continuity for a moment at each terminal, replace the mode control motor (see page 21-86).

Protected by AR



## Mode Control Motor Replacement

1. Remove the glove box (see page 20-104).
2. Remove the climate control unit (see page 21-88).
3. Remove the harness clip (A), the self-tapping screws and the passenger's heater duct (B).

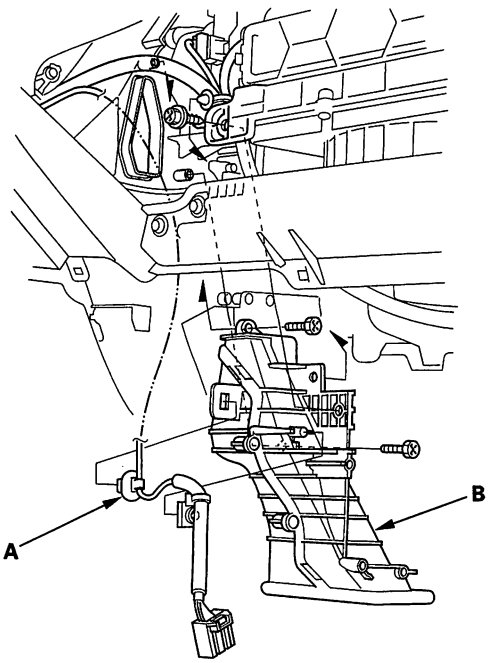


4. Disconnect the 7P connector (A) from the mode control motor (B). Remove the self-tapping screws and the mode control motor from the heater unit.

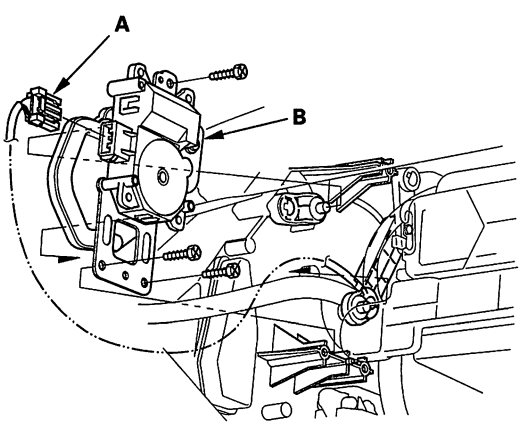


5. Install the motor in the reverse order of removal. Make sure the pin on the motor is properly engaged with the linkage. After installation, make sure the motor runs smoothly.

## Recirculation Control Motor Test

NOTE: Before testing, check for HVAC DTCs (see page 21-8).

1. Disconnect the 7P connector from the *recirculation* control motor.

**NOTICE**
Incorrectly applying power and ground to the recirculation control motor will damage it. Follow the instructions carefully.

2. Connect battery power to the No. 1 terminal of the recirculation control motor, and ground the No. 5 or No. 7 terminals; the recirculation control motor should run smoothly. To avoid damaging the recirculation control motor, do not reverse power and ground. Disconnect the No. 5 or No. 7 terminal from ground; the recirculation control motor should stop at Fresh (when the No. 7 terminal is disconnected) or Recirculate (when the No. 5 terminal is disconnected). Don't cycle the recirculation control motor for a long time.

**RECIRCULATION CONTROL MOTOR**

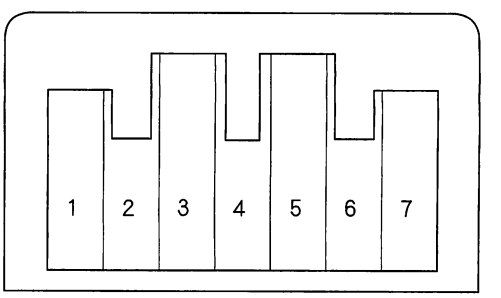


3. If the recirculation control motor did not run in step 2, remove it, then check the recirculation control linkage and doors for smooth movement.
   - If the linkage and doors move smoothly, replace the recirculation control motor (see page 21-87).
   - If the linkage or doors stick or bind, repair them as needed.



BACK

Protected by AR

## Recirculation Control Motor Replacement

1. Remove the glove box (see page 20-104).
2. Remove the climate control unit (see page 21-88).
3. Remove the harness clip (A), the self-tapping screws and the passenger's heater duct (B).

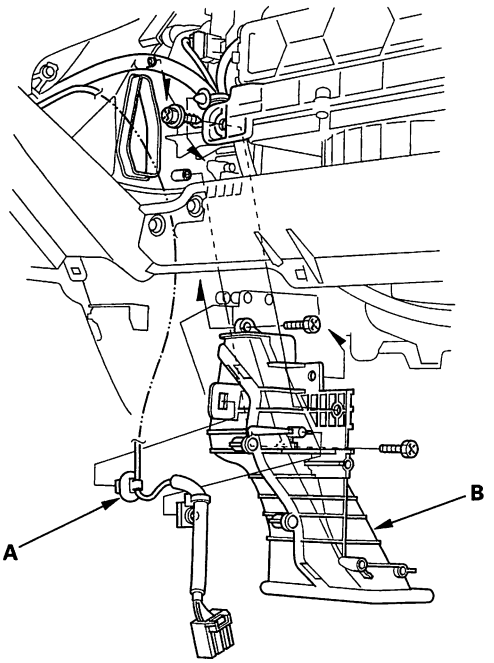


4. Disconnect the 7P connector (A) from the recirculation control motor (B). Remove the self-tapping screws and the recirculation control motor from the blower unit.

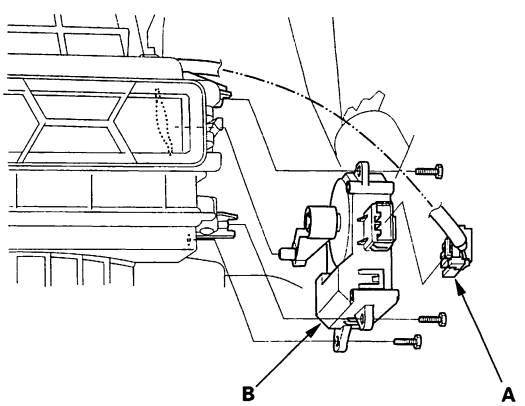


5. Install the motor in the reverse order of removal. Make sure the pin on the motor is properly engaged with the linkage. After installation, make sure the motor runs smoothly.

## Dust and Pollen Filter Replacement

1. Open the glove box. Remove the damper from the glove box then let the glove box hang down (see page 20-104).
2. Remove the dust and pollen filter assembly from the evaporator case.

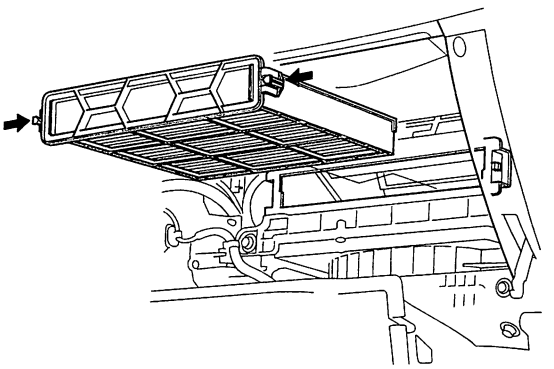

3. Remove the filter (A) from the housing (B), and replace the filter.

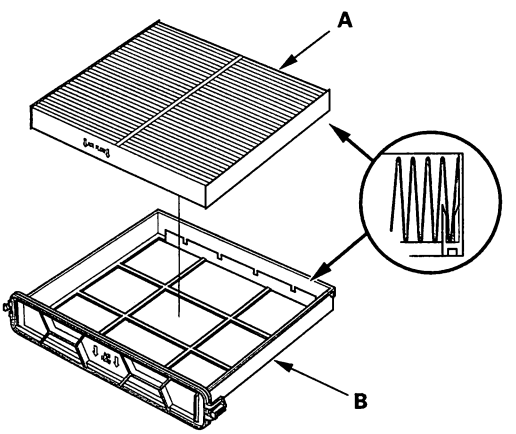


4. Install the filter in the reverse order of removal. Make sure that there is no air leaking out of the evaporator.

Protected by AR



## Climate Control Unit Removal and Installation

1. Remove the passenger's dashboard undercover (see page 20-103).
2. Disconnect the connector (A).

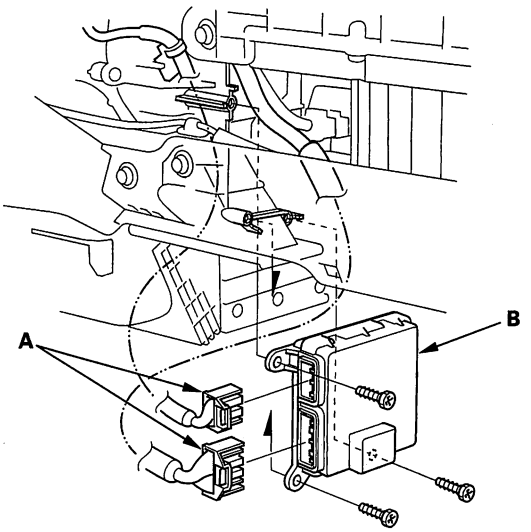


3. Remove the self-tapping screws and climate control unit (B).
4. Install the control unit in the reverse order of removal. After installation, operate the various functions to see whether works properly.
5. Run the self-diagnostic function to confirm that there are no problems in the system (see page 21-10).

## Climate Control Switch Removal/ Installation

1. Remove the center panel (see page 20-101).
2. Remove the self-tapping screws and the climate control switches (A).

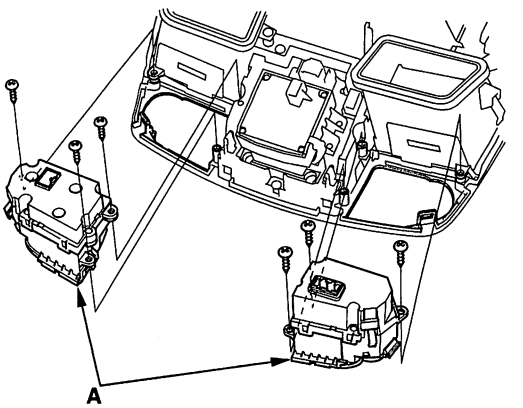


3. Install the switches in the reverse order of removal.



BACK

Protected by AR

## Climate Control Switch Bulb Replacement

1. Remove the climate control switch (see page 21-88).
2. Remove the screws and cover (A) from the driver's climate control switch (B).

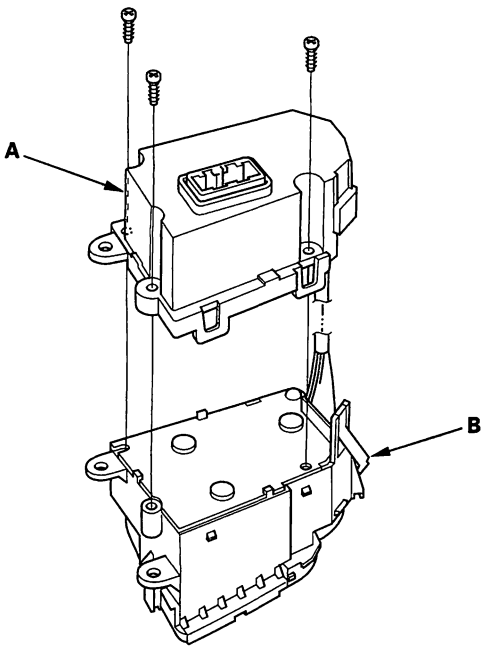


3. Remove the bulb(s) with a flat-tip screwdriver.

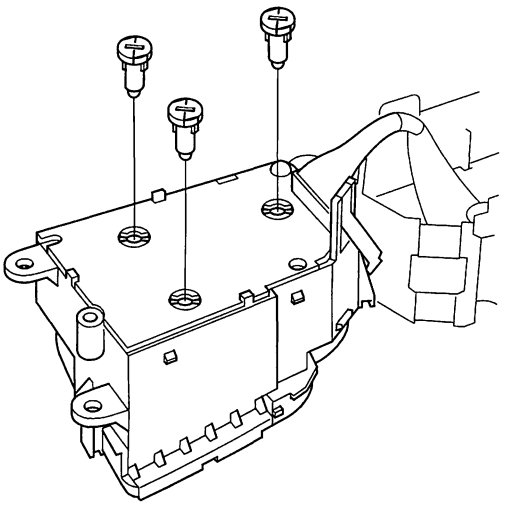

4. Install the bulb(s) in the reverse order of removal. After installation, operate the various functions to see whether it works properly.

Protected by AR



## Blower Unit Removal and Installation

1. Remove the glove box (see page 20-104).
2. Remove the climate control unit (see page 21-88).
3. Remove the harness clip (A), the self-tapping screws, and the passenger's heater duct (B).

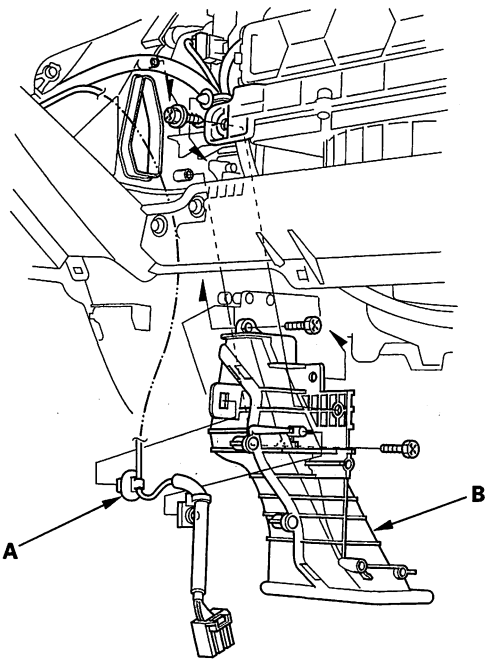


4. Remove the harness clip (A), and bolts. Cut the plastic cross brace (B) in the glove box opening with diagonal cutters in the area shown. Retain these parts to be reinstalled later.

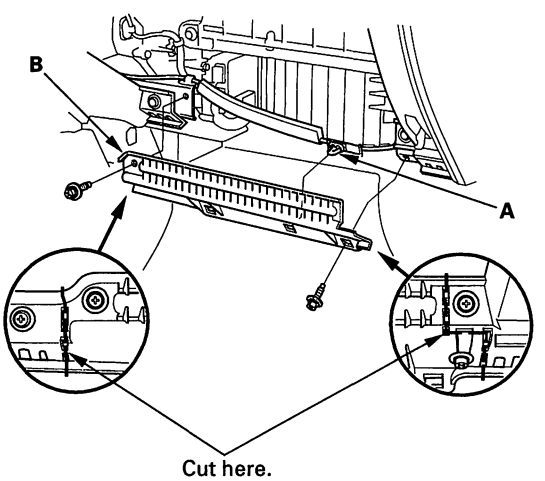


5. Disconnect the connector (A) from the recirculation control motor.

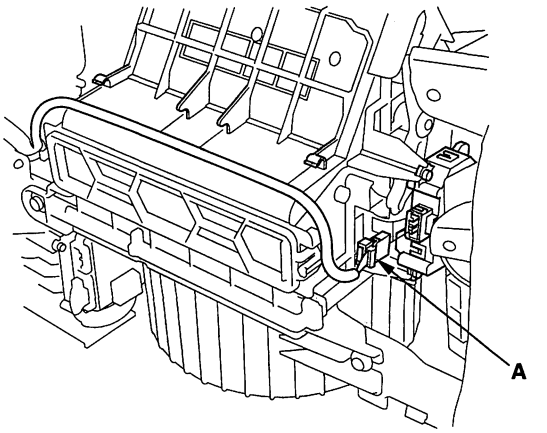


6. Disconnect the connector (A) from the blower motor, then remove the wire harness clip (B) and ground terminal bolt (C).

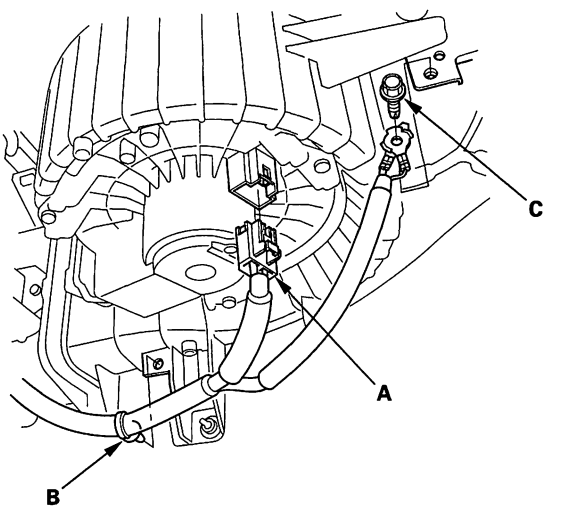




BACK

Protected by AR

7. Remove the self-tapping screws, the bolt, the mounting nuts, and the blower unit (A).

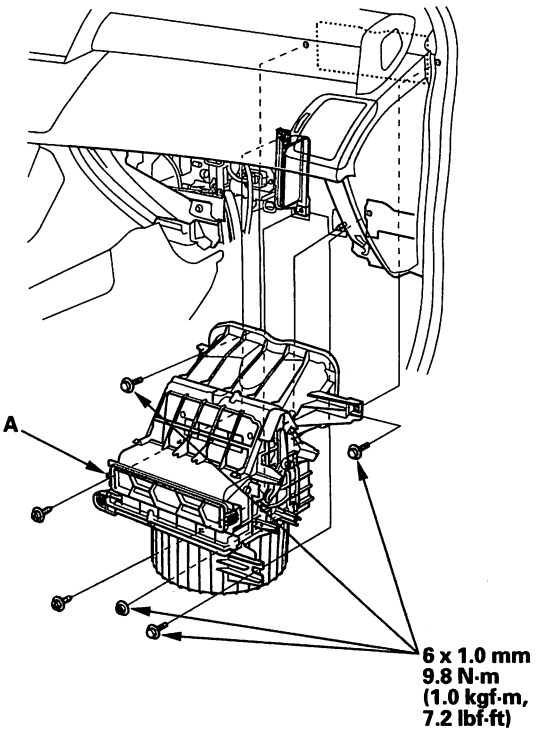


8. Install the unit in the reverse order of removal. Make sure that there is no air leakage.

## Blower Unit Component Replacement

Note these items when overhauling the blower unit:

- The recirculation control motor (A), blower motor (B) and the dust and pollen filter (C) can be replaced without removing the blower unit.
- Before reassembly, make sure that the recirculation control linkage and door move smoothly without binding.
- After reassembly, make sure the recirculation control motor runs smoothly (see page 21-86).

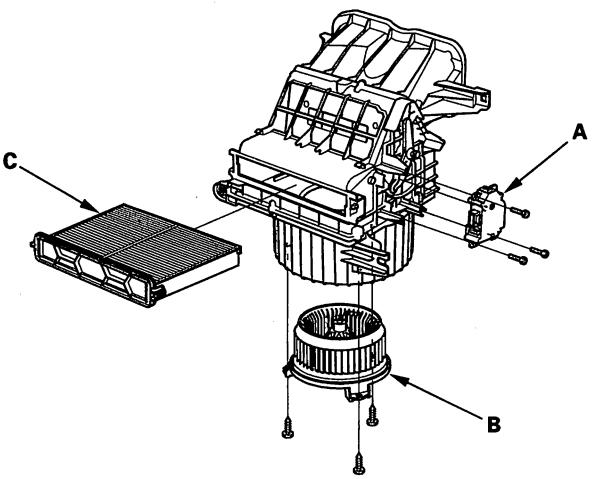

Protected by AR



## Evaporator Core Replacement

1. Recover the refrigerant with a recovery/recycling/charging station (see page 21-105).

2. Remove the bolt (A).

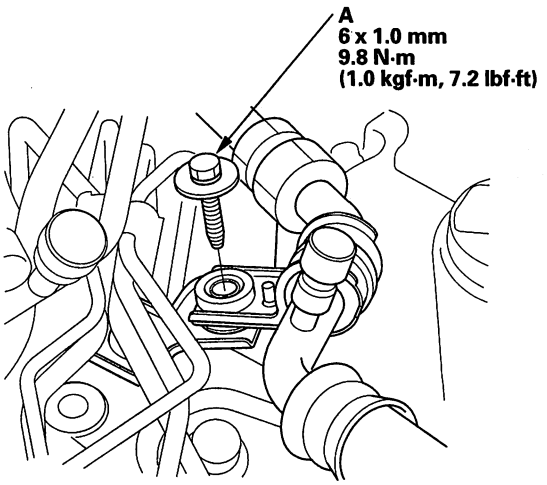


3. Remove the nut, then disconnect the A/C lines (A) and remove the O-rings (B) from the evaporator core.

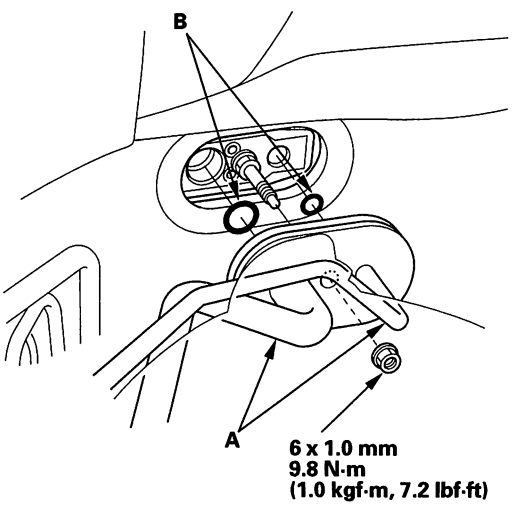


4. Remove the stud bolt (A).

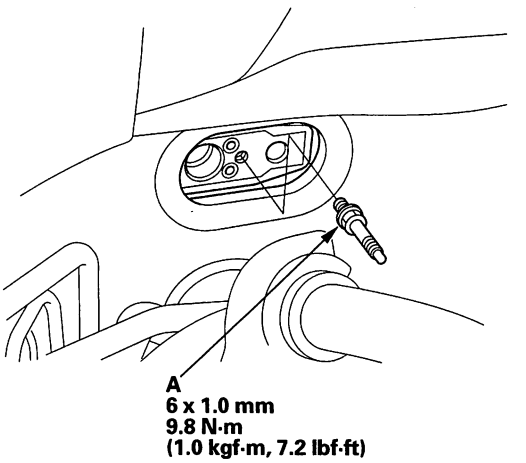


5. Remove the blower unit (see page 21-90).

6. Disconnect the connectors (A) from the evaporator temperature sensor and the power transistor, then remove the connector clip (B). Remove the self-tapping screws, the expansion valve cover (C), and the seal (D).

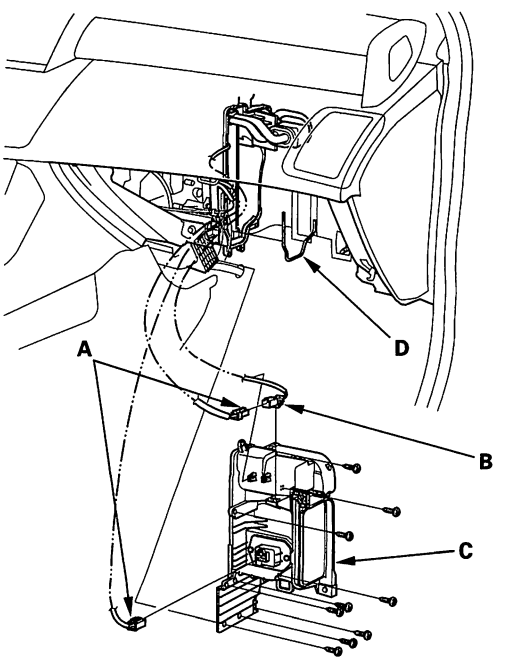




BACK

Protected by AR

7. Carefully pull out the evaporator core (A) without bending the lines, then remove the plate (B).

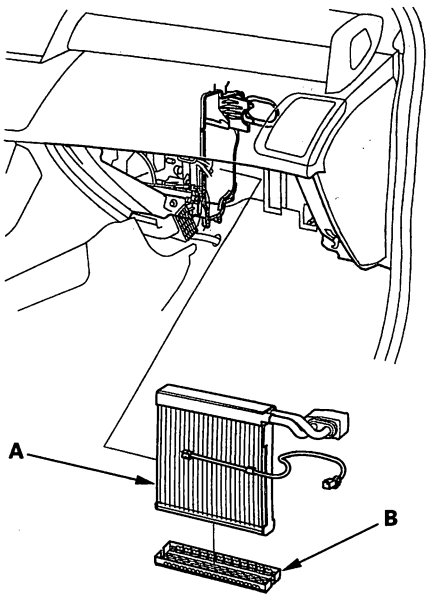


8. Remove the clip (A) and the evaporator temperature sensor (B).

   NOTE: The evaporator temperature sensor is installed in the fin at the 7th fin from the left side by the factory preset.

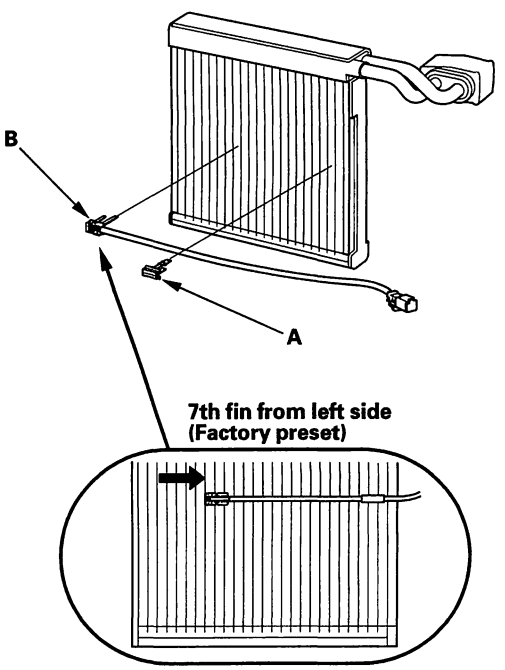


9. When the evaporator temperature sensor is re-installed, set the evaporator temperature sensor in the fin at the left side by the previous position.

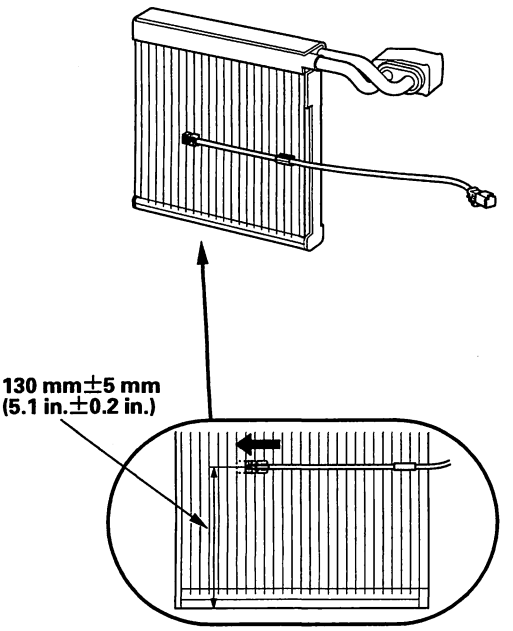


10. Install the core in the reverse order of removal and note these items:

    - If you're installing a new evaporator core, add refrigerant oil (SP-10) (see page 21-6).
    - Replace the O-rings with new ones at each fitting, and apply a thin coat of refrigerant oil before installing them. Be sure to use the correct O-rings for HFC-134a (R-134a) to avoid leakage.
    - Immediately after using the oil, reinstall the cap on the container, and seal it to avoid moisture absorption.
    - Do not spill the refrigerant oil on the vehicle; it may damage the paint; if the refrigerant oil contacts the paint, wash it off immediately.
    - Make sure that there is no air leakage.
    - Charge the system (see page 21-107).

Protected by AR



## Heater Unit/Core Replacement

SRS components are located in this area. Review the SRS component locations (see page 24-12), and the precautions and procedures (see page 24-14) before doing repairs or service.

1. Make sure you have the anti-theft code for the audio system and the navigation system (if equipped), then write down the audio presets.

2. Make sure the ignition is OFF, then disconnect the negative cable from the battery.

3. Disconnect the A/C line from the evaporator core (see page 21-92).

4. Remove the air cleaner housing assembly (see page 11-394).

5. From under the hood, open the cable clamp (A), then disconnect the heater valve cable (B) from the heater valve arm (C). Turn the heater valve arm to the fully opened position as shown.

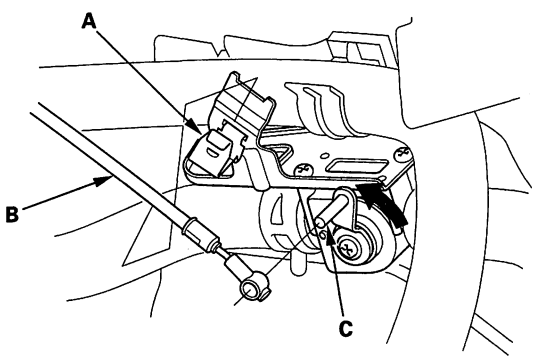


6. When the engine is cool, drain the engine coolant from the radiator (see page 10-7).

7. From under the hood, slide the hose clamps (A) back. Disconnect the inlet heater hose (B) and the outlet heater hose (C) from the heater unit. Note the orientation of the hose.
   Engine coolant will run out when the hoses are disconnected; drain it into a clean drip pan. Be sure not to let coolant spill on the electrical parts or the painted surfaces. If any coolant spills, rinse it off immediately.

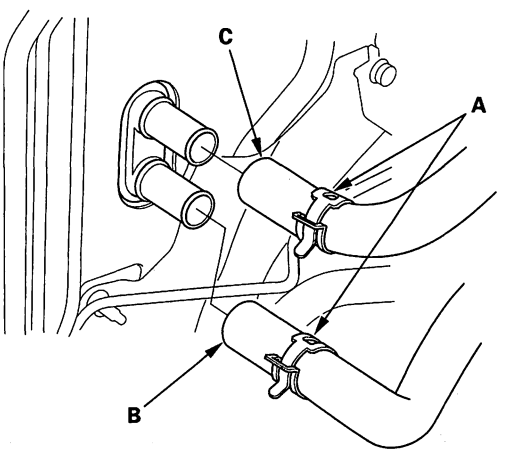




BACK

Protected by AR

8. Remove the mounting nut from the heater unit. Take care not to damage or bend the fuel lines or brake lines, etc.

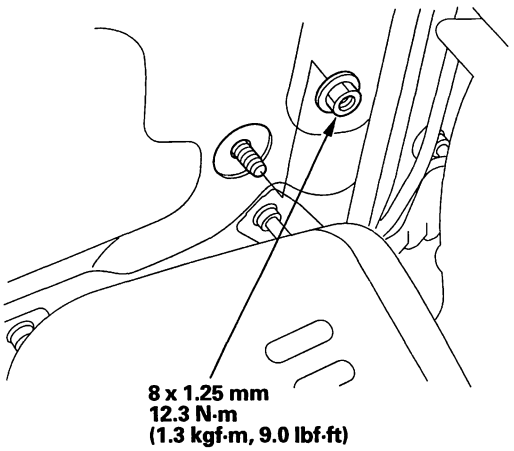


9. Remove the dashboard (see page 20-108).

10. Disconnect the connector (A) from the blower motor. Remove the wire harness clip (B) and ground terminal bolt (C).

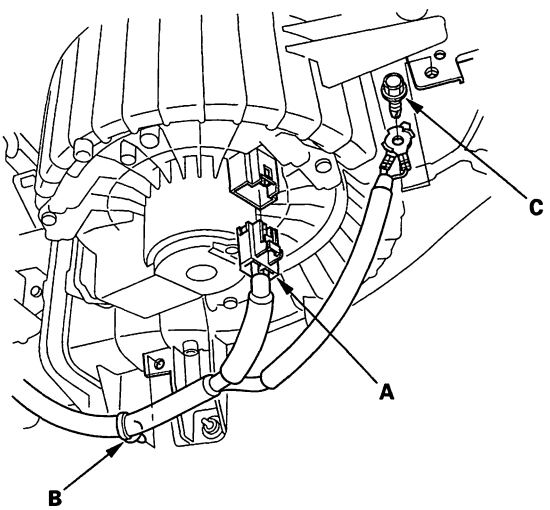


11. Disconnect the connector (A) from the recirculation control motor.

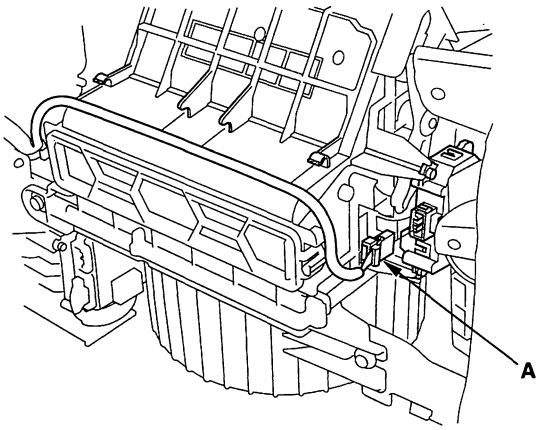


12. Disconnect the connectors (A) from the climate control unit, mode control motor, passenger's air mix motor, the evaporator temperature sensor, and the power transistor. Remove the wire harness clip (B).

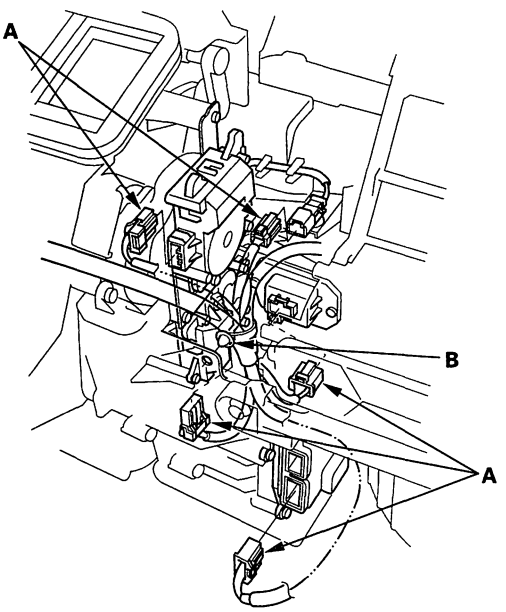


(cont'd)

Protected by AR



## Heater Unit/Core Replacement (cont'd)

13. Disconnect the connectors (A) from the driver's air mix control motor and A/C wire harness. Remove the connector clip (B), the wire harness clips (C), and the wire harness (D).

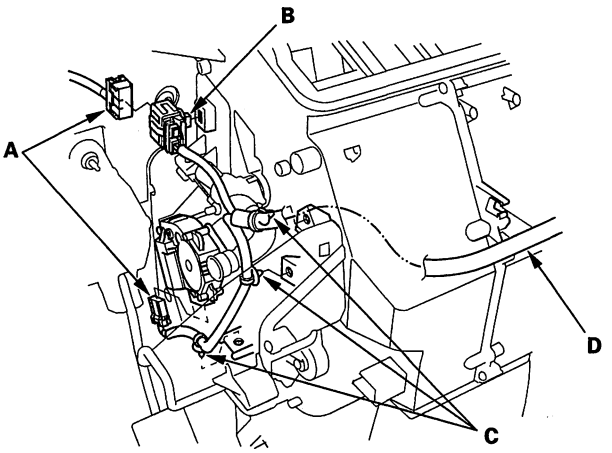


14. Remove the mounting bolt, mounting nuts, and blower-heater unit (A).

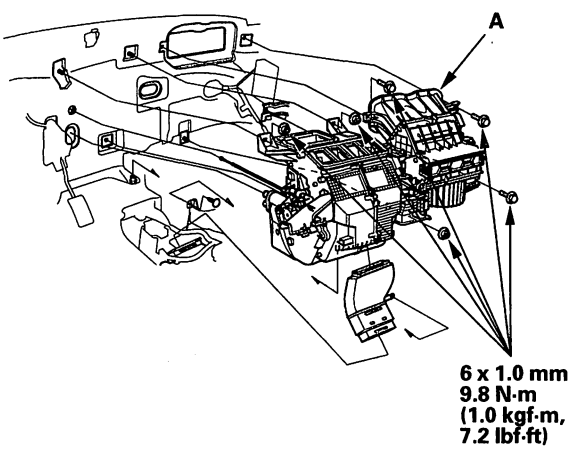


15. Remove the self-tapping screws, the heater core cover (A), the grommet (B), and carefully pull out the heater core (C).

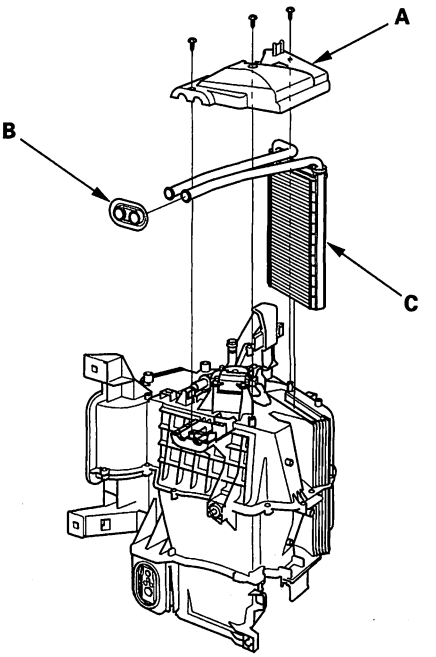


16. Install the heater core and the evaporator core in the reverse order of removal.

17. Install the heater unit in the reverse order of removal, and note these items:

- Do not interchange the inlet and outlet heater hoses, and install the hose clamps securely.
- Refill the cooling system with engine coolant (see page 10-7).
- Make sure that there is no coolant leakage.
- Make sure that there is no air leakage.
- Refer to evaporator core replacement (see page 21-92).
- Enter the anti-theft code for the audio system and navigation system (if equipped), then enter the audio presets.
- Set the clock.



BACK

Protected by AR

## Heater Valve Cable Adjustment

1. From under the hood, open the cable clamp (A), then disconnect the heater valve cable (B) from the heater valve arm (C).

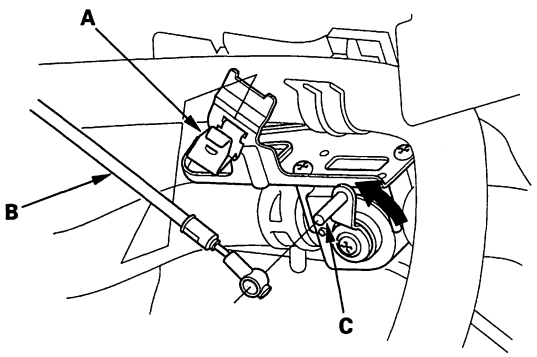


2. From under the dash, disconnect the heater valve cable housing from the cable clamp (A), and disconnect the heater valve cable (B) from the air mix control linkage (C).

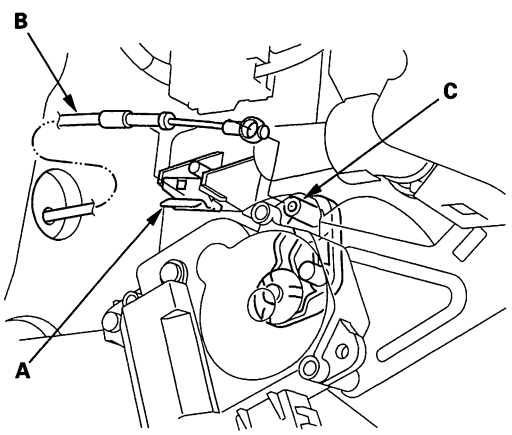


3. Set the temperature control button to Max Cool (Lo) with the ignition switch ON (II).

4. Attach the heater valve cable (B) to the air mix control linkage (C) as shown in step 2. Hold the end of the heater valve cable housing against the stop (D), then snap the heater valve cable housing into the cable clamp (A).

   NOTE: Make sure the ring-end of the cable is pushed all the way to the base of the pin on air mix control linkage.

5. From under the hood, turn the heater valve arm (A) to the fully closed position as shown, and hold it. Attach the heater valve cable (B) to the heater valve arm, and gently pull on the heater valve cable housing to take up any slack, then install the heater valve cable housing into the cable clamp (C).

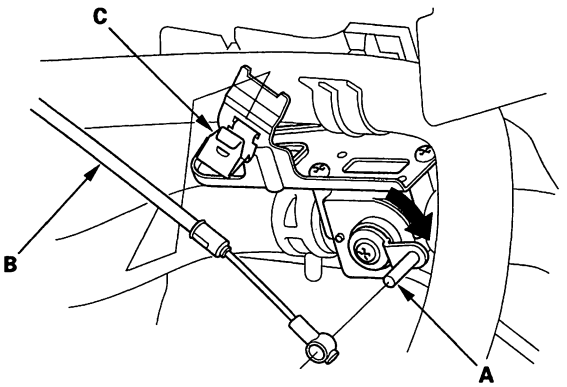

Protected by AR



## A/C Compressor Replacement

NOTE: Do not install an A/C compressor into a system unless you are completely sure that the system is free of contamination. Installing the A/C compressor into a contaminated system can result in premature A/C compressor failure.

1. If the A/C compressor is marginally operable, run the engine at idle speed, and let the air conditioning work for a few minutes, then shut the engine off.

2. Recover the refrigerant with a recovery/recycling/charging station (see page 21-105).

3. Make sure you have the anti-theft code for the audio system and navigation system (if equipped), then write down the audio presets.

4. Remove the front bumper (see page 20-146) and the alternator (see page 4-34).

5. Disconnect the connector (A) from the A/C condenser fan motor. Then remove the upper mounting bolts, and the A/C condenser fan shroud (B). Be careful not to damage the radiator fins when removing the A/C condenser fan shroud.

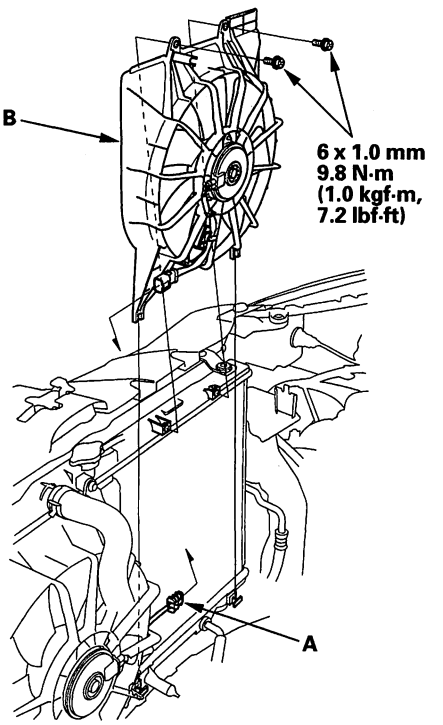




BACK

Protected by AR

6. Remove the bolt and the nut, then disconnect the suction hose (A), discharge hose (B) and connector (C) from the A/C compressor. After the hoses are disconnected, remove the O-rings and plug or cap the lines immediately after disconnecting them to avoid moisture and dust contamination.

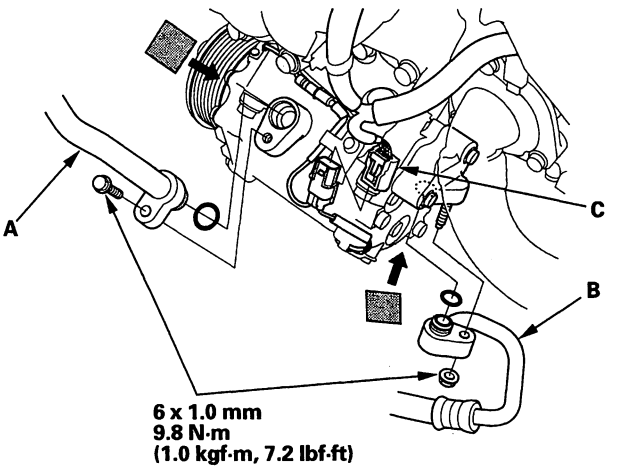


7. Remove the mounting bolts and the A/C compressor (A). Be careful not to damage the radiator fins when removing the A/C compressor.

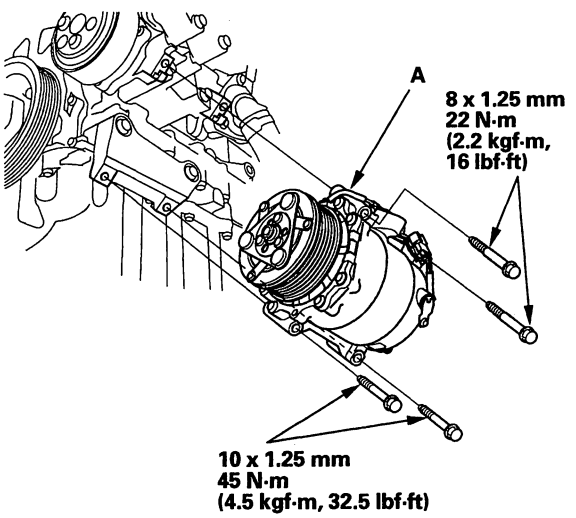


8. Install the compressor in the reverse order of removal, and note these items:

- Inspect the A/C lines for any signs of contamination.
- If you're installing a new A/C compressor, you must calculate the amount of refrigerant oil to be removed from it (see page 21-6). A new A/C compressor comes with a full charge of oil.
- Replace the O-rings with new ones at each fitting, and apply a thin coat of refrigerant oil before installing them. Be sure to use the correct O-rings for HFC-134a (R-134a) to avoid leakage.
- Use refrigerant oil (SP-10) for HFC-134a SANDEN spiral type A/C compressor only.
- To avoid contamination, do not return the oil to the container once dispensed, and never mix it with other refrigerant oils.
- Immediately after using the oil, reinstall the cap on the container, and seal it to avoid moisture absorption.
- Do not spill the refrigerant oil on the vehicle; it may damage the paint; if the refrigerant oil contacts the paint, wash it off immediately.
- Charge the system (see page 21-107).
- Enter the anti-theft code for the audio system and navigation system (if equipped), then enter the audio presets.
- Set the clock.

Protected by AR



## A/C Compressor Clutch Check

1. Check the armature plate for discoloration, peeling, or other damage. If there is damage, replace the clutch set (see page 21-101).

2. Check the rotor pulley bearing play and drag by rotating the rotor pulley by hand. Replace the clutch set with a new one if it is noisy or has excessive play/drag (see page 21-101).

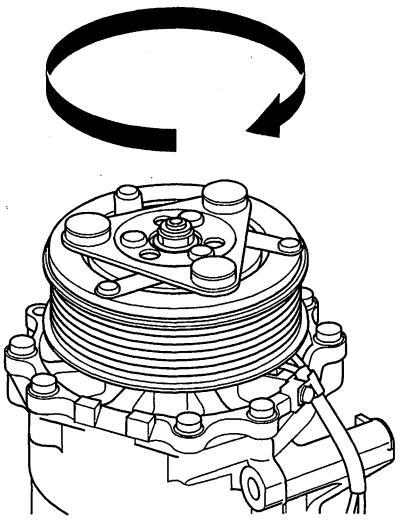

3. Measure the clearance between the rotor pulley (A) and the armature plate (B) all the way around. If the clearance is not within specified limits, remove the armature plate (see page 21-101) and add or remove shims as needed to increase or decrease clearance.

   **Clearance: 0.35—0.65 mm (0.014—0.026 in.)**

   NOTE: The shims are available in four thicknesses: 0.1 mm, 0.2 mm, 0.4 mm, and 0.5 mm.

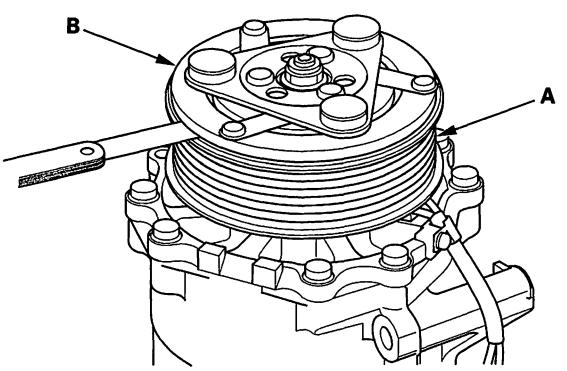


4. Check for continuity between the A/C compressor clutch connector No. 1 and No. 2. If there is no continuity, replace the thermal protector (see page 21-102).

   NOTE: The thermal protector will have no continuity above about 252 to 262 ℉ (122 to 128 ℃). When the temperature drops below about 241 to 219 ℉ (116 to 104 ℃), the thermal protector will have continuity.

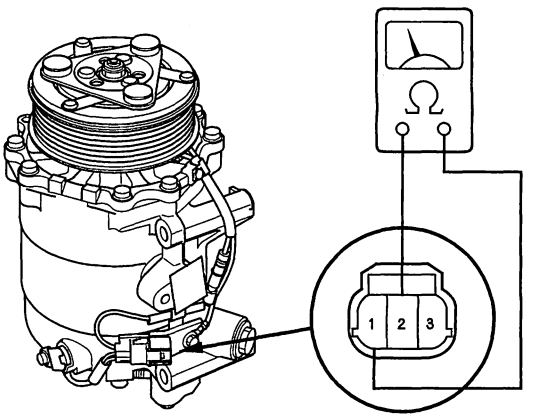


5. Disconnect the field coil connector (A). Check resistance of the field coil. If resistance is not within specifications, replace the field coil (see page 21-101).

   **Field Coil Resistance: 3.15—3.45 Ω 68 ℉ (20 ℃)**

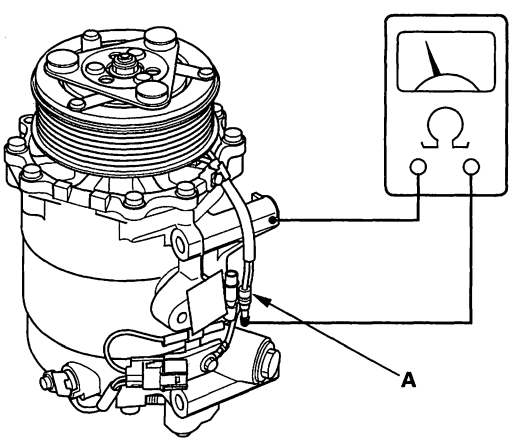




BACK

Protected by AR

## A/C Compressor Clutch Overhaul

**Special Tools Required**
A/C clutch holder, Robinair 10204 or Kent-Moore J37872, or Honda Tool and Equipment KMT-J33939, or commercially available

1. Remove the center nut while holding the armature plate (A) with a commercially available A/C clutch holder (B).

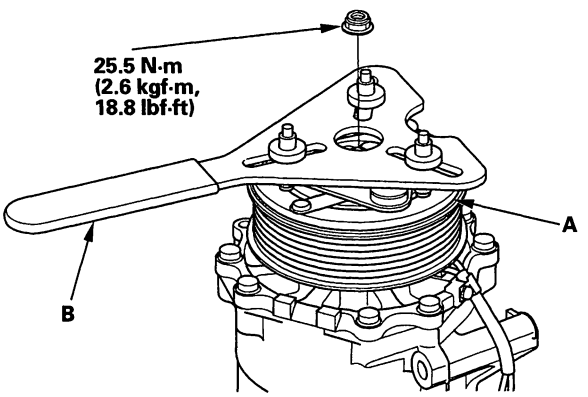


2. Remove the armature plate (A) and shim(s) (B), taking care not to lose the shim(s). If the clutch needs adjustment, increase or decrease the number and thickness of shims as necessary, then reinstall the armature plate, and recheck its clearance (see page 21-100).

   NOTE: The shims are available in four thicknesses: 0.1 mm, 0.2 mm, 0.4 mm, and 0.5 mm.

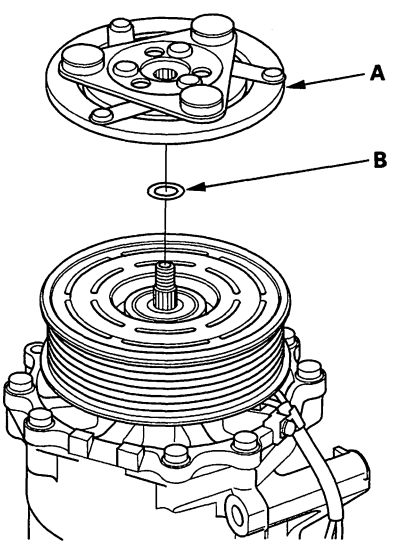


3. If you are replacing the field coil, remove the snap ring (A) with snap ring pliers, then remove the rotor pulley (B). Be careful not to damage the rotor pulley and A/C compressor.

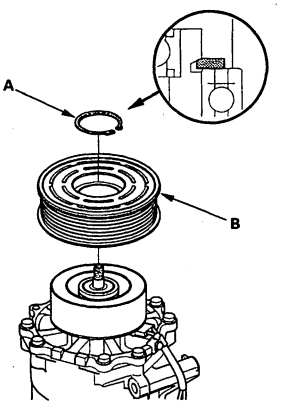


4. Remove the bolt (A), then disconnect the field coil connector (B). Remove the snap ring (C) with snap ring pliers, then remove the field coil (D). Be careful not to damage the field coil and A/C compressor.

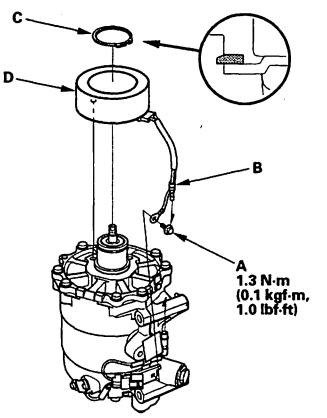


5. Reassemble the clutch in the reverse order of disassembly, and note these items:

   - Install the field coil with the wire side facing down, and align the boss on the field coil with the hole in the A/C compressor.
   - Clean the rotor pulley and A/C compressor sliding surfaces with contact cleaner or other non-petroleum solvent.
   - Install new snap rings, note the installation direction, and make sure they are fully seated in the groove.
   - Make sure that the rotor pulley turns smoothly after it's reassembled.
   - Route and clamp the wires properly or they can be damaged by the rotor pulley.

BACK

Protected by AR



## A/C Compressor Thermal Protector Replacement

1. Remove the bolt and the stay (A), and remove the bolt and the holder (B). Disconnect the field coil connector (C), then detach the harness clip and remove the thermal protector (D).

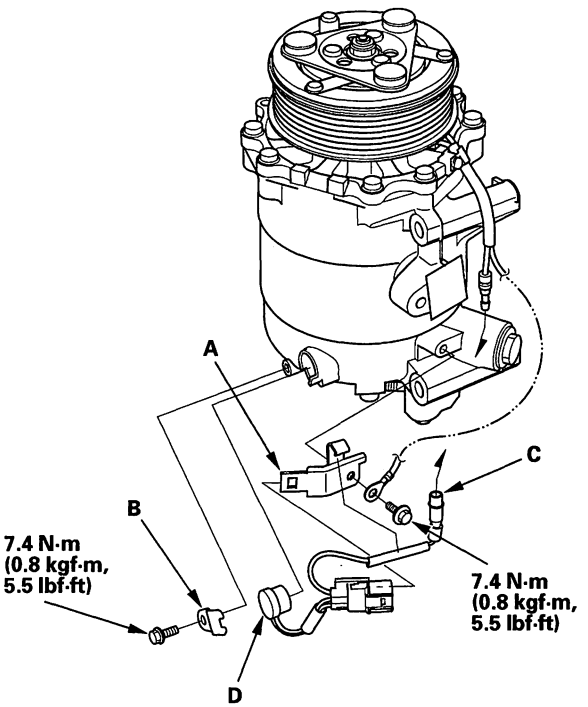


2. Replace the thermal protector (A) with a new one, and apply silicone sealant (B) to the bottom of the thermal protector.

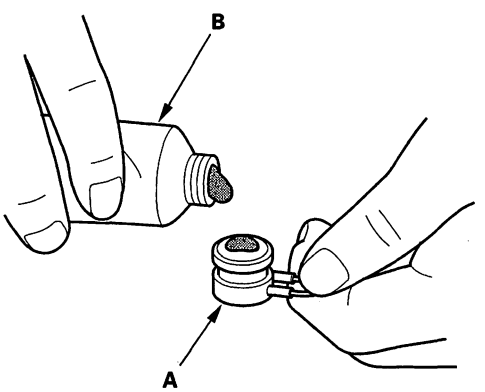


3. Install the thermal protector in the reverse order of removal.

## A/C Compressor Relief Valve Replacement

1. Recover the refrigerant with a recovery/recycling/charging station (see page 21-105).

2. Remove the relief valve (A), and the O-ring (B). Plug the opening to keep foreign matter from entering the system and the A/C compressor oil from running out.

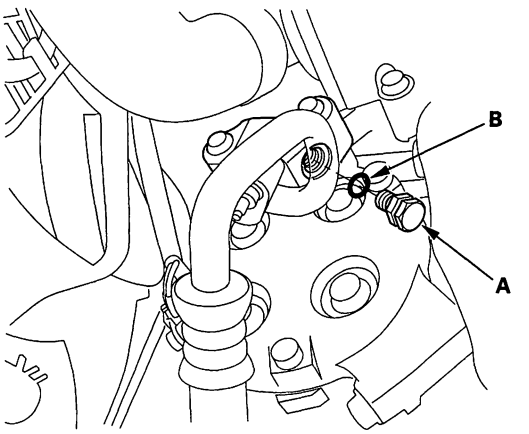


3. Clean the mating surfaces.

4. Replace the O-ring with a new one at the relief valve, and apply a thin coat of refrigerant oil before installing it.

5. Remove the plug, and install and tighten the relief valve.

6. Charge the system (see page 21-107).



BACK

Protected by AR

## A/C Condenser Replacement

1. Recover the refrigerant with a recovery/recycling/charging station (see page 21-105).

2. Remove the front bumper (see page 20-146).

3. Remove the bolts, then disconnect the discharge hose (A) from the A/C condenser.

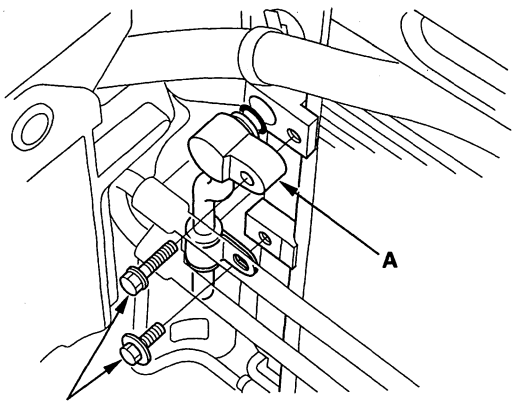


6 x 1.0 mm
9.8 N·m
(1.0 kgf·m, 7.2 lbf·ft)

4. Remove the bolt, then disconnect the receiver line (A) from the A/C condenser.

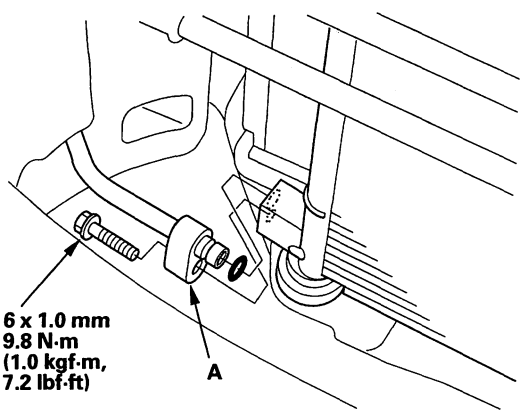


6 x 1.0 mm
9.8 N·m
(1.0 kgf·m,
7.2 lbf·ft)

5. Remove the bolts, then pull the bracket (A) down slightly.

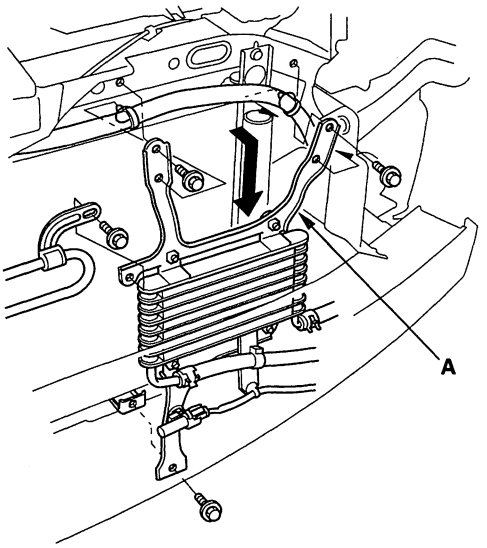


(cont'd)

Protected by AR



## A/C Condenser Replacement (cont'd)

6. Remove the bolts and brackets (A), then remove the A/C condenser (B). Be careful not to damage the radiator and A/C condenser fins when removing the A/C condenser.

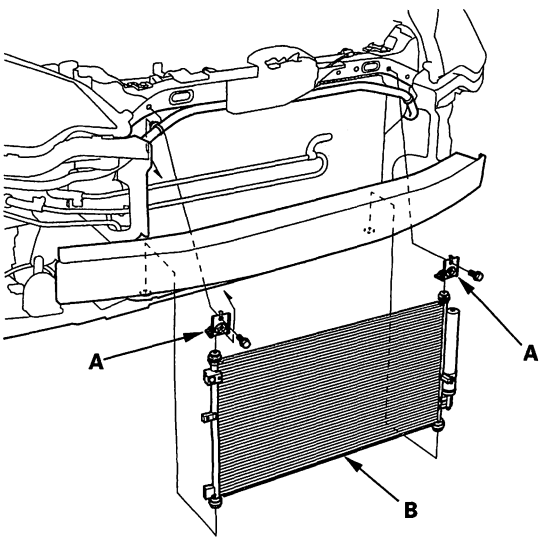


7. Install the A/C condenser in the reverse order of removal, and note these items:

   - If you're installing a new A/C condenser, add refrigerant oil (SP-10) (see page 21-6).
   - Replace the O-rings with new ones at each fitting, and apply a thin coat of refrigerant oil before installing them. Be sure to use the correct O-rings for HFC-134a (R-134a) to avoid leakage.
   - Immediately after using the oil, reinstall the cap on the container, and seal it to avoid moisture absorption.
   - Do not spill the refrigerant oil on the vehicle; it may damage the paint; if the refrigerant oil contacts the paint, wash it off immediately.
   - Charge the system (see page 21-107).

## Receiver/Dryer Desiccant Replacement

NOTE: Install the receiver/dryer as quickly as possible to prevent the system from absorbing moisture from the air.

1. Remove the A/C condenser (see page 21-103).

2. Remove the bolts from the A/C condenser, then remove the receiver/dryer (A), the bracket (B), and the O-rings (C).

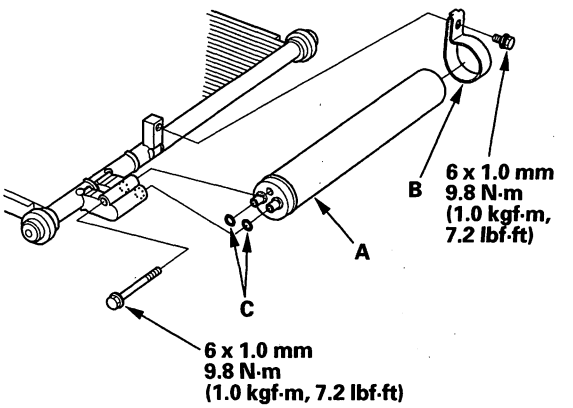


3. Install the receiver/dryer in the reverse order of removal. Replace the O-rings with new ones, and apply a thin coat of refrigerant oil (SP-10) before installing them. Be sure to use the correct O-rings for HFC-134a (R-134a) to avoid leakage.



BACK

Protected by AR

## Refrigerant Recovery

**⚠CAUTION**

- Air conditioning refrigerant or lubricant vapor can irritate your eyes, nose, or throat.
- Be careful when connecting service equipment.
- Do not breathe refrigerant or vapor.

NOTE:
- If accidental system discharge occurs, ventilate the work area before resuming service.
- Additional health and safety information may be obtained from the refrigerant and lubricant manufacturers.

1. Connect an R-134a refrigerant recovery/recycling/charging station (A) to the high-pressure service port (B) and the low-pressure service port (C), as shown, following the equipment manufacturer's instructions.

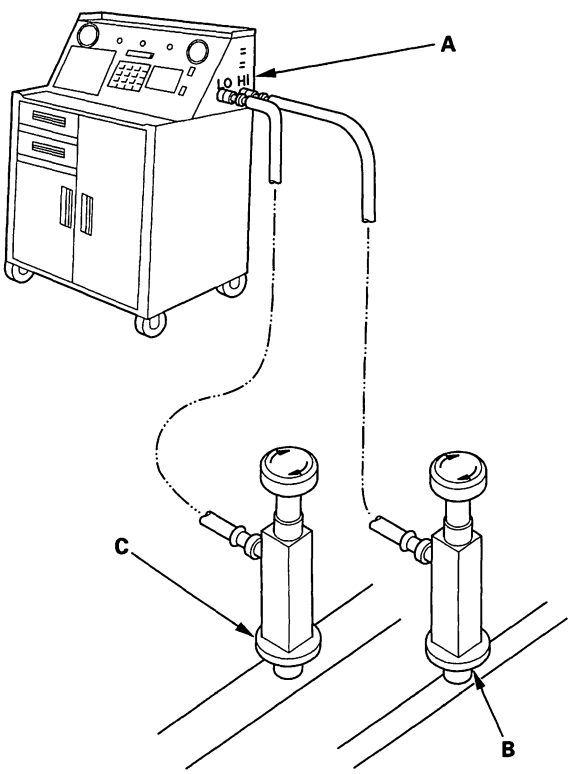


2. Measure the amount of refrigerant oil removed from the A/C system after the recovery process is completed. Be sure to put the same amount of new refrigerant oil back into the A/C system before charging.

Protected by AR



## System Evacuation

**⚠CAUTION**

- Air conditioning refrigerant or lubricant vapor can irritate your eyes, nose, or throat.
- Be careful when connecting service equipment.
- Do not breathe refrigerant or vapor.

NOTE:
- If accidental system discharge occurs, ventilate the work area before resuming service.
- Additional health and safety information may be obtained from the refrigerant and lubricant manufacturers.

1. When an A/C System has been opened to the atmosphere, such as during installation or repair, it must be evacuated using an R-134a refrigerant recovery/recycling/charging station. If the system has been open for several days, the receiver/dryer should be replaced, and the system should be evacuated for several hours.

2. Connect an R-134a refrigerant recovery/recycling/charging station (A) to the high-pressure service port (B) and the low-pressure service port (C), as shown, following the equipment manufacturer's instructions. Evacuate the system.

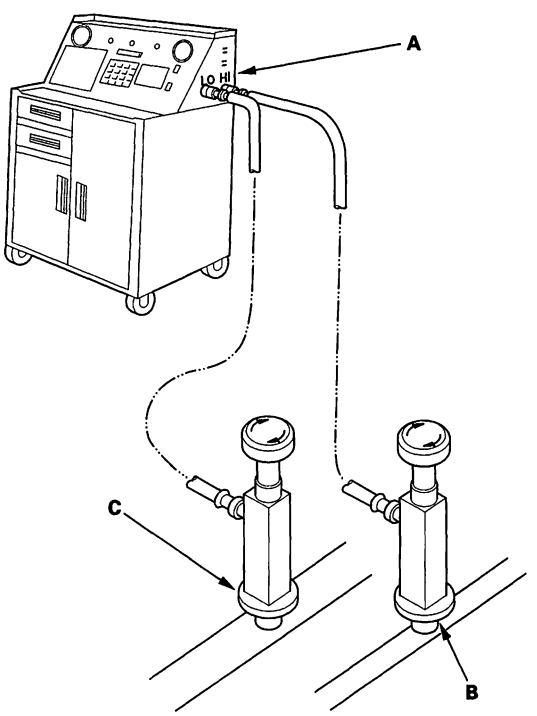


3. If the low-pressure does not reach more than 93.3 kPa (700 mmHg, 27.6 in.Hg) in 15 minutes, there is probably a leak in the system. Partially charge the system, and check for leaks (see step 3 on page 21-108).



BACK

Protected by AR

## System Charging

**⚠CAUTION**

- Air conditioning refrigerant or lubricant vapor can irritate your eyes, nose, or throat.
- Be careful when connecting service equipment.
- Do not breathe refrigerant or vapor.

NOTE:
- If accidental system discharge occurs, ventilate work area before resuming service.
- Additional health and safety information may be obtained from the refrigerant and lubricant manufacturers.

1. Connect an R-134a refrigerant recovery/recycling/charging station (A) to the high-pressure service port (B) and the low-pressure service port (C), as shown, following the equipment manufacturer's instructions.

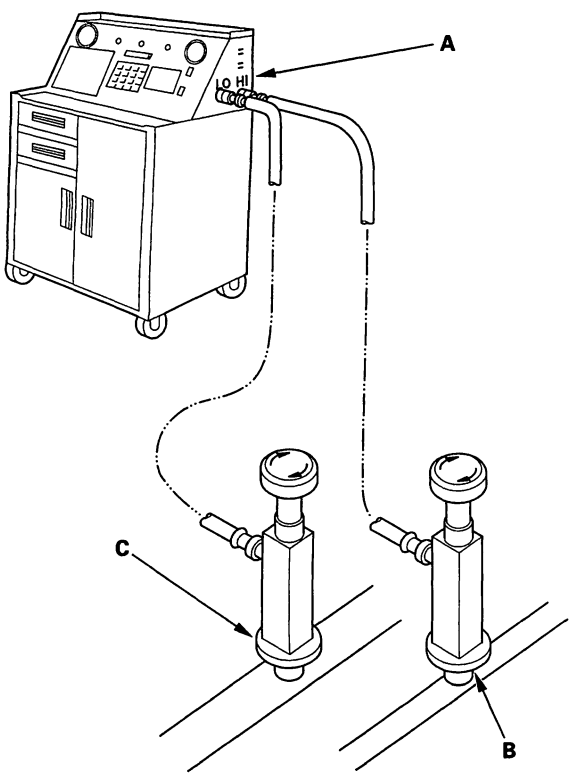


2. Evacuate the system (see page 21-106).

3. Add the same amount of new refrigerant oil to the system that was removed during recovery. Use only SP-10 refrigerant oil.

4. Charge the system with the specified amount of R-134a refrigerant. Do not overcharge the system; the A/C compressor will be damaged.

   Select the appropriate units of measure for your refrigerant charging station.

   **Refrigerant Capacity:**
   **450 to 500 g**
   **0.45 to 0.50 kg**
   **1.0 to 1.1 lbs**
   **15.9 to 17.6 oz**

5. Check for refrigerant leaks (see page 21-108).

6. Check the system performance (see page 21-109).

Protected by AR



## Refrigerant Leak Test

**Special Tools Required**
Leak detector, Honda Tool and Equipment YGK-H-10PM or commercially available

**⚠CAUTION**

- Air conditioning refrigerant or lubricant vapor can irritate your eyes, nose, or throat.
- Be careful when connecting service equipment.
- Do not breathe refrigerant or vapor.

NOTE:
- If accidental system discharge occurs, ventilate the work area before resuming service.
- Additional health and safety information may be obtained from the refrigerant and lubricant manufacturers.

1. Connect an R-134a refrigerant recovery/recycling/charging station (A) to the high-pressure service port (B) and the low-pressure service port (C), as shown, following the equipment manufacturer's instructions.

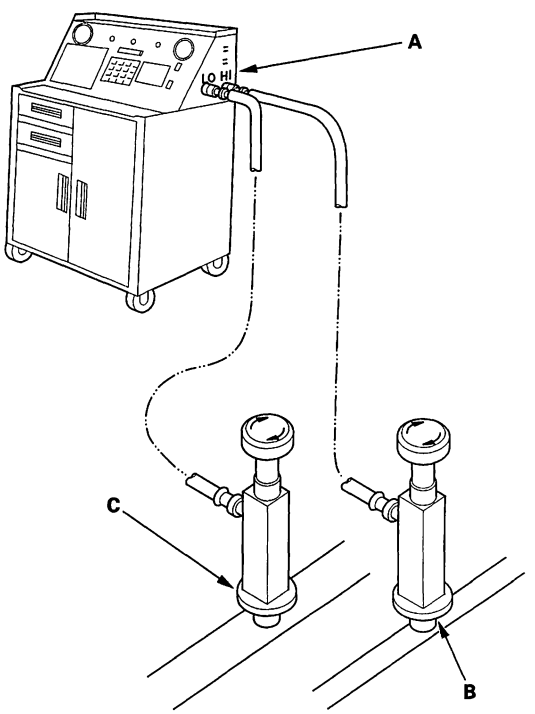


2. Open the high pressure valve to charge the system to the specified capacity, then close the supply valve, and disconnect the charging station fittings.

   Select the appropriate units of measurement for your refrigerant charging station.

   **Refrigerant Capacity:**
   **450 to 500 g**
   **0.45 to 0.50 kg**
   **1.0 to 1.1 lbs**
   **15.9 to 17.6 oz**

3. Check the system for leaks using an R-134a refrigerant leak detector with an accuracy of 14 g (0.5 oz) per year or better.

4. If you find leaks that require the system to be opened (to repair or replace hoses, fittings, etc.), do a recovery of the system.

5. After checking and repairing leaks, the system must be evacuated.



BACK

Protected by AR

# A/C System Test

## Performance Test

**⚠CAUTION**

- Air conditioning refrigerant or lubricant vapor can irritate your eyes, nose, or throat.
- Be careful when connecting service equipment.
- Do not breathe refrigerant or vapor.

The performance test will help determine if the A/C system is operating within specifications.

NOTE:
- If accidental system discharge occurs, ventilate the work area before resuming service.
- Additional health and safety information may be obtained from the refrigerant and lubricant manufacturers.

1. Connect an R-134a refrigerant recovery/recycling/charging station to the high-pressure service port and the low-pressure service port, following the equipment manufacturer's instructions.

2. Determine the relative humidity and air temperature.

3. Open the glove box. Remove the glove box stop on each side, then let the glove box hang down (see page 20-104).

4. Insert a thermometer (A) in the center vent.

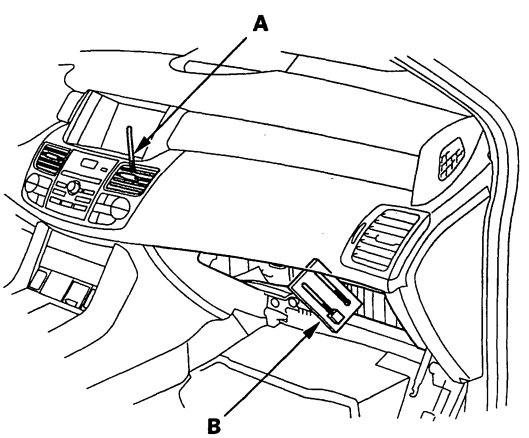


5. Place a thermometer (B) near the blower unit's recirculation inlet duct.

6. Test conditions:

   - Avoid direct sunlight.
   - Open hood.
   - Open front doors.
   - Set the temperature control switch to Max Cool, the mode control switch to Vent, and the recirculation control switch to Recirculate.
   - Turn the A/C switch ON and the fan switch to Max.
   - Hold the engine speed at 1,500 rpm.
   - No driver or passengers in vehicle.

7. After running the air conditioning for 10 minutes under the above test conditions, read the delivery temperature from the thermometer in the center vent, the intake temperature near the blower unit, and the discharge (high) and suction (low) pressures on the A/C gauges.

(cont'd)

Protected by AR



## A/C System Test (cont'd)

8. Refer to the inspection data.

**Inspection data**

| | | |
|---|---|---|
| Example | Intake temperature (dry): | 86 ℉ (30 ℃) Humidity level 70 % |
| | Intake temperature (wet): | 81.9 ℉ (27.7 ℃) |
| | Delivery temperature: | 55.8 ℉ (13.2 ℃) |
| | Intake pressure: | 201 kPa (2.0 kgf/cm²) (29 psi) |
| | Delivery pressure: | 1,380 kPa (14.1 kgf/cm²) (200 psi) |
| Results: | Within normal range | |

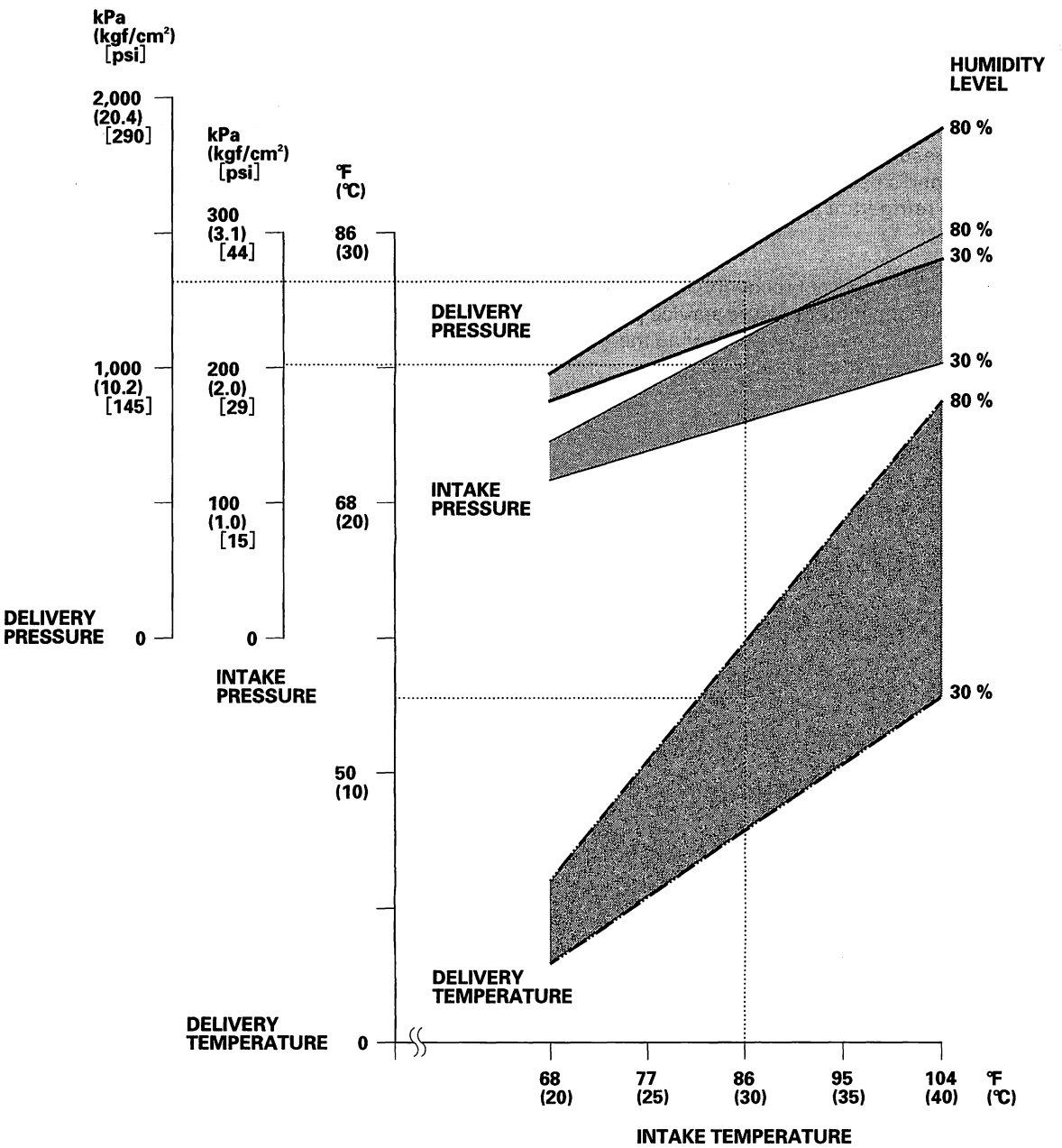




BACK

Protected by AR

## Pressure Test

| Test results | Related symptoms | Probable cause | Remedy |
|---|---|---|---|
| Discharge (high) pressure abnormally high | After stopping A/C compressor, pressure drops to about 196 kPa (2.0 kgf/cm², 28 psi) quickly, and then falls gradually. | Air in system | Recover, evacuate (see page 21-106), and recharge with specified amount (see page 21-107). |
| | Reduced or no airflow through A/C condenser | • Clogged A/C condenser or radiator fins<br>• A/C condenser or radiator fan not working properly | • Clean.<br>• Check voltage and fan rpm.<br>• Check fan direction. |
| | Line to A/C condenser is excessively hot. | Restricted flow of refrigerant in system | Restricted lines. |
| Discharge pressure abnormally low | High and low-pressures are balanced soon after stopping A/C compressor. Low side is higher than normal. | • Faulty A/C compressor discharge valve<br>• Faulty A/C compressor seal | Replace the A/C compressor. |
| | Outlet of expansion valve is not frosted, low-pressure gauge indicates vacuum. | • Faulty expansion valve<br>• Moisture in system | • Replace.<br>• Recover, evacuate, and recharge with specified amount. |
| Suction (low) pressure abnormally low | Expansion valve is not frosted, and low-pressure line is not cold. Low-pressure gauge indicates vacuum. | • Frozen expansion valve (Moisture in system)<br>• Faulty expansion valve | • Recover, evacuate, and recharge with specified amount.<br>• Replace the expansion valve. |
| | Discharge temperature is low, and the airflow from vents is restricted. | Frozen evaporator | Run the fan with A/C compressor off, then check the evaporator temperature sensor. |
| | Expansion valve is frosted. | Clogged expansion valve | Clean or replace. |
| Suction pressure abnormally high | Low-pressure hose and check joint are cooler than the temperature around evaporator. | Expansion valve open too long | Repair or replace. |
| | Suction pressure is lowered when A/C condenser is cooled by water. | Excessive refrigerant in system | Recover, evacuate, and recharge with specified amount. |
| | High and low-pressures are equalized as soon as the A/C compressor is stopped, and both gauges fluctuate while running. | • Faulty gasket<br>• Faulty high-pressure valve<br>• Foreign particle stuck in high-pressure valve | Replace the A/C compressor. |
| Suction and discharge pressures abnormally high | Reduced airflow through A/C condenser. | • Clogged A/C condenser or radiator fins<br>• A/C condenser or radiator fan not working properly | • Clean.<br>• Check voltage and fan rpm.<br>• Check fan direction. |
| Suction and discharge pressures abnormally low | Low-pressure hose and metal end areas are cooler than evaporator. | Clogged or kinked low-pressure hose parts | Repair or replace. |
| | Temperature around expansion valve is too low compared with that around receiver/dryer. | Clogged high-pressure line | Repair or replace. |
| Refrigerant leaks | A/C compressor clutch is dirty. | A/C compressor shaft seal leaking | Replace the A/C compressor. |
| | A/C compressor bolt(s) are dirty. | Leaking around bolt(s) | Tighten bolt(s) or replace the A/C compressor. |
| | A/C compressor gasket is wet with oil. | Gasket leaking | Replace the A/C compressor. |
| | A/C fitting is dirty. | Leaking O-ring | Clean the A/C fitting and replace the O-ring. |

BACK

Protected by AR

BACK

Protected by AR

## SUPPLEMENTAL RESTRAINT SYSTEM (SRS) (If electrical maintenance is required)

The RDX SRS includes a driver's airbag in the steering wheel hub, a passenger's airbag in the dashboard above the glove box, seat belt tensioners in the front seat belt retractors, driver's seat belt buckle tensioner in the driver's seat belt lower anchor, front passenger's seat belt buckle tensioners in the front passenger's seat belt lower anchor, side curtain airbags in the sides of the roof, and side airbags in the front seat-backs. Information necessary to safely service the SRS is included in this Service Manual. Items marked with an asterisk ( * ) on the contents page include or are located near SRS components. Servicing, disassembling, or replacing these items require special precautions and tools, and should be done only by an authorized Acura dealer.

- To avoid rendering the SRS inoperative, which could lead to personal injury or death in the event of a severe frontal or side collision, all SRS service work must be performed by an authorized Acura dealer.
- Improper service procedures, including incorrect removal and installation of the SRS, could lead to personal injury caused by unintentional deployment of the airbags and/or side airbags.
- Do not bump or impact the SRS unit, front impact sensors, or side impact sensors when the ignition switch is ON (II), or for at least 3 minutes after the ignition switch is turned OFF; otherwise, the system may fail in a collision, or the airbags may deploy.
- SRS electrical connectors are identified by yellow color coding. Related components are located in the steering column, front console, dashboard, dashboard lower panel, in the dashboard above the glove box, in the front seats, in the roof side, and around the floor. Do not use electrical test equipment on these circuits.

Protected by AR

# Body Electrical


**Body Electrical**
Special Tools ..... 22-2
General Troubleshooting Information ..... 22-3

**Relay and Control Unit Locations ..... 22-7**

**Wire Harness and Ground Locations ..... 22-13**

**Fuse/Relay Boxes ..... 22-52**

**Power Distribution ..... 22-55**

**Ground Distribution ..... 22-60**

**Under-hood Fuse/Relay Box**
Removal and Installation ..... 22-61

*** Under-dash Fuse/Relay Box**
Removal and Installation ..... 22-62

**Battery ..... 22-63**

**Relays ..... 22-64**

*** Ignition Switch**
Test ..... 22-66
Replacement ..... 22-66

**Multiplex Integrated Control System**
Component Location Index ..... 22-67
General Troubleshooting Information ..... 22-68
DTC Troubleshooting Index ..... 22-71
System Description ..... 22-75
Troubleshooting-B-CAN System Diagnosis Test Mode A ..... 22-88
Troubleshooting-B-CAN System Diagnosis Test Mode B ..... 22-90
Troubleshooting-B-CAN System Diagnosis Test Mode C ..... 22-91
Troubleshooting-B-CAN System Diagnosis Test Mode D ..... 22-92
Troubleshooting-B-CAN System Diagnosis Test Mode 1 and Test Mode 2 (without HDS) ..... 22-93
Sleep and Wake-up Mode Test ..... 22-95
Cicuit Diagram ..... 22-96
DTC Troubleshooting ..... 22-99
MICU Input Test ..... 22-107

**Keyless/Power Door Locks/Security System**
Component Location Index ..... 22-110
System Description ..... 22-112
Circuit Diagram ..... 22-114
DTC Troubleshooting ..... 22-118
Symptom Troubleshooting ..... 22-126
MICU Input Test ..... 22-131
Door Lock Actuator Test ..... 22-136
Door Lock Knob Switch Test ..... 22-137
Door Lock Switch Test ..... 22-138
Door Key Cylinder Switch Test ..... 22-139
Tailgate Release Actuator Test ..... 22-139
Tailgate Latch Switch Test ..... 22-140
Hood Switch Test ..... 22-140
Tailgate Outer Handle Switch Test/ Replacement ..... 22-141
Keyless Buzzer Test/Replacement ..... 22-141
Transmitter Test ..... 22-142
Transmitter Programming ..... 22-144

**Horn**
Component Location Index ..... 22-145
Circuit Diagram ..... 22-146
Horn Test/Replacement ..... 22-147
Horn Switch Test ..... 22-147

**Exterior Lights**
Component Location Index ..... 22-149
Circuit Diagram ..... 22-152
DTC Troubleshooting ..... 22-157
MICU Input Test ..... 22-163
Combination Light Switch Test/ Replacement ..... 22-167
HID Lamp System Troubleshooting ..... 22-168
HID Bulb Replacement ..... 22-172
HID Unit Replacement ..... 22-173
Headlight Adjustment ..... 22-174
Headlight Replacement ..... 22-175
Bulb Replacement ..... 22-176
Fog Light Replacement ..... 22-177
Fog Light Adjustment ..... 22-178
Taillight Replacement ..... 22-178
License Plate Light Replacement ..... 22-179
High Mount Brake Light Replacement ..... 22-180
Brake Pedal Position Switch Test ..... 22-180

**Turn Signal/Hazard Flasher**
Component Location Index ..... 22-181
Circuit Diagram ..... 22-182
DTC Troubleshooting ..... 22-184
MICU Input Test ..... 22-186
Hazard Warning Switch Test/ Replacement ..... 22-190
Side Turn Signal Light Replacement ..... 22-191

**Interior Lights**
Component Location Index ..... 22-192
Circuit Diagram ..... 22-194
Interior Lights Switch Test/ Replacement ..... 22-196
Front Individual Map Light Replacement ..... 22-197
Ceiling Light Replacement ..... 22-197
Cargo Area Light Test/Replacement ..... 22-198
Glove Box Light Test/Replacement ..... 22-198
Courtesy Light Replacement ..... 22-199
Vanity Mirror Light Test/Replacement ..... 22-200
Console Box Light Replacement ..... 22-201
Armbient Light Test ..... 22-201

**Entry Lights Control System**
Component Location Index ..... 22-202
Circuit Diagram ..... 22-203
MICU Input Test ..... 22-204
Ignition Key Switch Test ..... 22-207

Protected by AR


## Power Windows
Component Location Index ..... 22-208
System Description ..... 22-209
Circuit Diagram ..... 22-210
Resetting the Power Window Control Unit ..... 22-213
Master Switch Input Test ..... 22-214
Front passenger's Power Window Switch Input Test ..... 22-217
Left Rear Power Window Switch Input Test ..... 22-219
Right Rear Power Window Switch Input Test ..... 22-221
Driver's and Front Passenger's Power Window Motor Test ..... 22-223
Rear Passenger's Power Window Motor Test ..... 22-224
Power Window Switch Replacement ..... 22-225

## Wipers/Washers
Component Location Index ..... 22-228
Circuit Diagram ..... 22-230
DTC Troubleshooting ..... 22-232
MICU Input Test ..... 22-241
Wiper/Washer Switch Test/ Replacement ..... 22-244
Wiper Motor Test ..... 22-245
Washer Motor Test ..... 22-246
Washer Fluid Level Switch Test (Canada models) ..... 22-246
Wiper Motor Replacement ..... 22-247
Rear Window Wiper Motor Replacement ..... 22-249
Washer Reservoir Replacement ..... 22-249
Wiper Blade Replacement ..... 22-250
Wiper Arm/Nozzle Adjustment ..... 22-251
Washer Tube Replacement ..... 22-253

## Gauges
Component Location Index ..... 22-255
Self-diagnostic Function ..... 22-258
Circuit Diagram ..... 22-262
DTC Troubleshooting ..... 22-269
Gauge Control Module Input Test ..... 22-282
Gauge Control Module Replacement ..... 22-284
Rewriting the ODO Data on a New Gauge Control Module ..... 22-284
Multi Information Switch Test/ Replacement ..... 22-285
Outside Air Temperature Indicator Calibration ..... 22-286

## Reminder Systems
Component Location Index ..... 22-287
Circuit Diagram ..... 22-288

## Moonroof
Component Location Index ..... 22-290
Resetting the Moonroof Control Unit ..... 22-291
Circuit Diagram ..... 22-292
Moonroof Control Unit Input Test ..... 22-293
Moonroof Switch Test/Replacement ..... 22-295

## Accessory Power Sockets
Component Location Index ..... 22-296
Circuit Diagram ..... 22-297
Front Accessory Power Socket Test/ Replacement ..... 22-298
Console Accessory Power Socket Test/ Replacement ..... 22-299

## Power Mirrors
Component Location Index ..... 22-300
Circuit Diagram ..... 22-302
Function Test ..... 22-304
Power Mirror Control Unit Input Test ..... 22-305
Power Mirror Actuator Test ..... 22-308
Power Mirror Switch Test/ Replacement ..... 22-309
Power Mirror Actuator Replacement ..... 22-310

## Seat Heaters
Component Location Index ..... 22-311
Circuit Diagram ..... 22-312
Seat Heater Test ..... 22-314
Switch Test ..... 22-315

## Power Lumbers Support
Component Location Index ..... 22-316
Circuit Diagram ..... 22-317
Switch Test/Replacement ..... 22-318
Motor Test ..... 22-318

## Power Seats
Component Location Index ..... 22-319
Circuit Diagram ..... 22-320
Switch Test/Replacement ..... 22-321
Motor Test ..... 22-322

## Rear Window Defogger
Component Location Index ..... 22-323
Circuit Diagram ..... 22-325
Function Test ..... 22-326
Defogger Wire Repair ..... 22-327

## Immobilizer System
Component Location Index ..... 22-328
System Description ..... 22-329
Circuit Diagram ..... 22-330
DTC Troubleshooting ..... 22-331
Symptom Troubleshooting Information ..... 22-333
Symptom Troubleshooting ..... 22-335
System Check ..... 22-338
Status Log ..... 22-340
Immobilizer Key Registration ..... 22-341
Immobilizer-Keyless Control Unit Input Test ..... 22-342
Immobilizer-Keyless Control Unit Replacement ..... 22-344

Protected by AR



## Special Tools

| Ref. No. | Tool Number | Description | Qty |
|---|---|---|---|
| ① | 07WAZ-001010A | MPCS (MICU) Service Connector | 1 |
| ② | 07TAZ-001020A | Back Probe Adaptor | 1 |

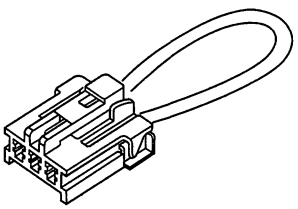

①

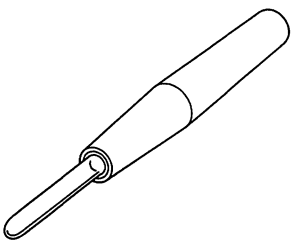

②



BACK

Protected by AR



# General Troubleshooting Information

## Tips and Precautions

### Before Troubleshooting

1. Check applicable fuses in the appropriate fuse/relay box.

2. Check the battery for damage, state of charge, and clean and tight connections.

**NOTICE**

- Do not quick-charge a battery unless the battery ground cable has been disconnected, otherwise you will damage the alternator diodes.
- Do not attempt to crank the engine with the battery ground cable loosely connected or you will severely damage the wiring.

### Handling Connectors

- Make sure the connectors are clean and have no loose wire terminals.
- Make sure multiple cavity connectors are packed with dielectric grease (except watertight connectors).
- All connectors have push-down release type locks (A).

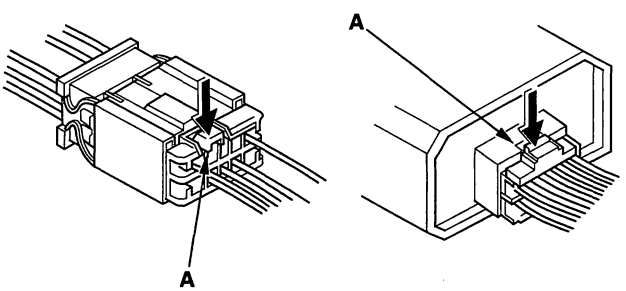


- Some connectors have a clip on their side used to attach them to a mount bracket on the body or on another component. This clip has a pull type lock.
- Some mounted connectors cannot be disconnected unless you first release the lock and remove the connector from its mount bracket (A).

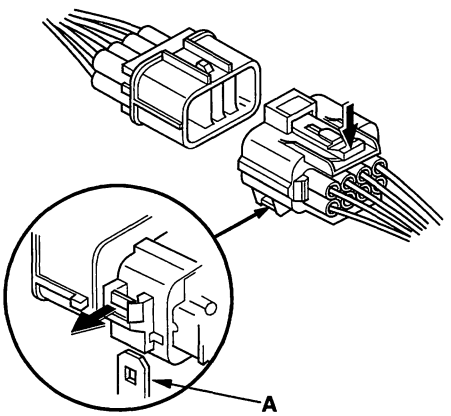


- Never try to disconnect connectors by pulling on their wires; pull on the connector halves instead.
- Always reinstall plastic covers.

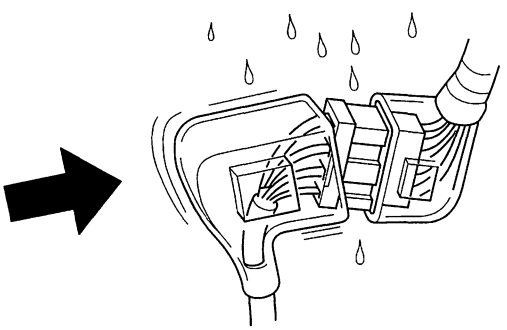

- Before connecting connectors, make sure the terminals (A) are in place and not bent.

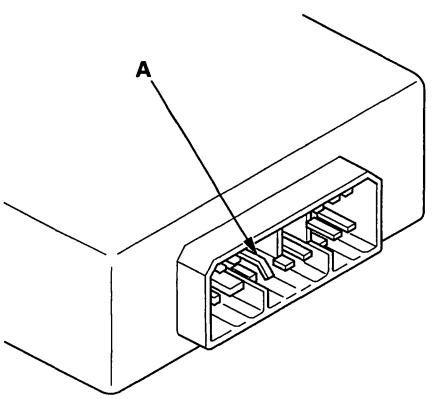


(cont'd)

Protected by AR



## General Troubleshooting Information (cont'd)

- Check for loose retainer (A) and rubber seals (B).

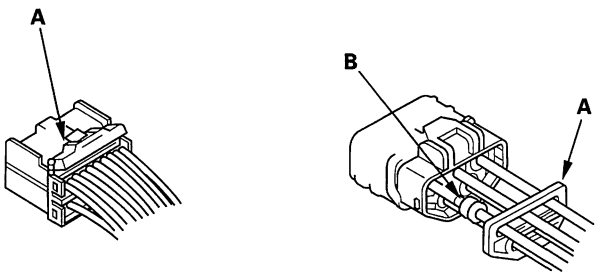


- The backs of some connectors are packed with dielectric grease. Add grease if necessary. If the grease is contaminated, replace it.

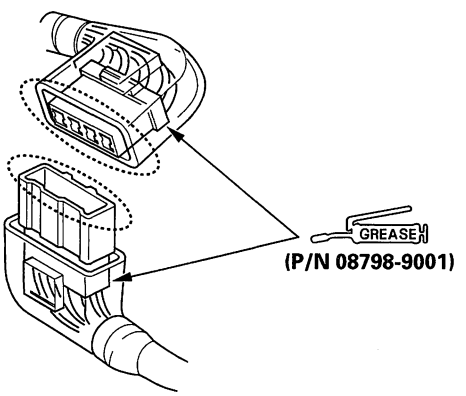


- Insert the connector all the way and make sure it is securely locked.
- Position wires so that the open end of the cover faces down.

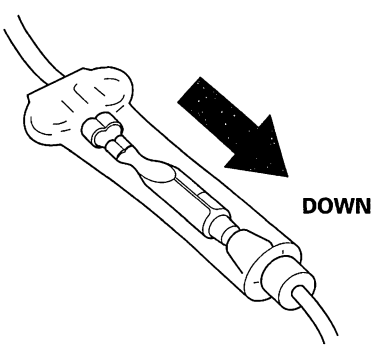


**Handling Wires and Harnesses**

- Secure wires and wire harnesses to the frame with their respective wire ties at the designated locations.
- Remove clips carefully; don't damage their locks (A).

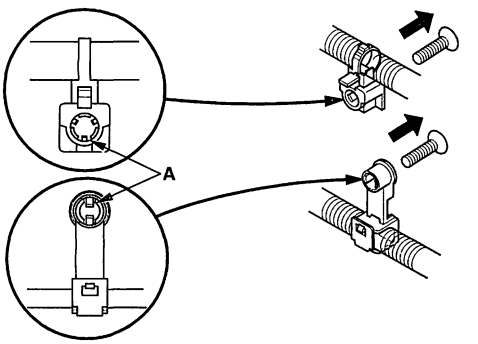


- Slip pliers (A) under the clip base and through the hole at an angle, then squeeze the expansion tabs to release the clip.

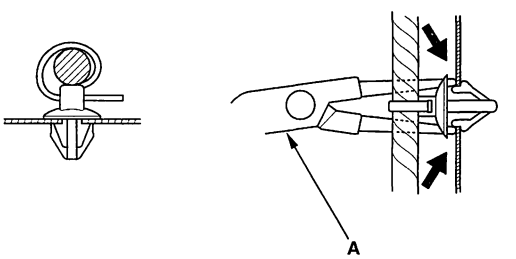


- After installing harness clips, make sure the harness doesn't interfere with any moving parts.
- Keep wire harnesses away from exhaust components and other hot parts, from sharp edges of brackets and holes, and from exposed screws and bolts.
- Seat grommets in their grooves properly (A). Do not leave grommets distorted (B).

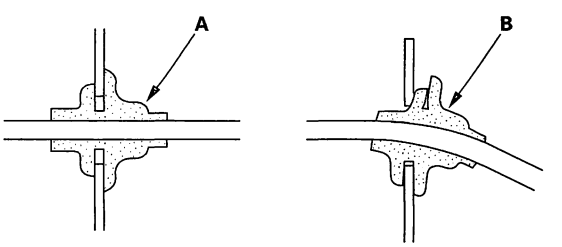




BACK

Protected by AR



**Testing and Repairs**

- Do not use wires or harnesses with broken insulation. Replace them or repair them by wrapping the break with electrical tape.
- Never attempt to modify, splice, or repair SRS wiring. If there is an open or damage is SRS wiring or terminals, replace the harness.
- After installing parts, make sure that no wires are pinched under them.
- When using electrical test equipment, follow the manufacturer's instructions and those described in this manual.
- If possible, insert the probe of the tester from the wire side (except waterproof connector).

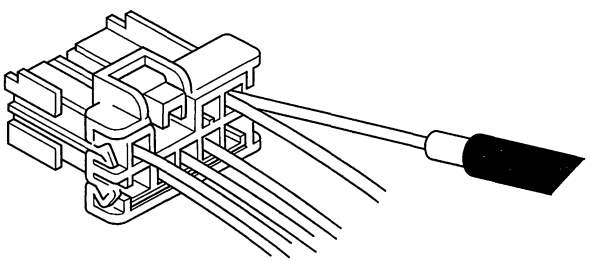

- Use back probe adaptor 07TAZ-001020A.

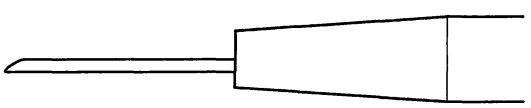

- Refer to the instructions in the Honda Terminal Kit for identification and replacement of connector terminals.

## Five-step Troubleshooting

1. Verify The Complaint:
   Turn on all the components in the problem circuit to verify the client complaint. Note the symptoms. Do not begin disassembly or testing until you have narrowed down the problem area.

2. Analyze The Schematic:
   Look up the schematic for the problem circuit. Determine how the circuit is supposed to work by tracing the current paths from the power feed through the circuit components to ground. If several circuits fail at the same time, the fuse or a ground is a likely cause.

   Based on the symptoms and your understanding of the circuit operation, identify one or more possible causes of the problem.

3. Isolate The Problem By Testing The Circuit:
   Make circuit tests to check the diagnosis you made in step 2. Keep in mind that a logical, simple procedure is the key to efficient troubleshooting. Test for the most likely cause of failure first. Try to make tests at points that are easily accessible.

4. Fix The Problem:
   Once the specific problem is identified, make the repair. Be sure to use proper tools and safe procedures.

5. Make Sure The Circuit Works:
   Turn on all components in the repaired circuit in all modes to make sure you've fixed the entire problem. If the problem was a blown fuse, be sure to test all of the circuits on the fuse. Make sure no new problems turn up and the original problem does not recur.

(cont'd)

Protected by AR



## General Troubleshooting Information (cont'd)

### Wire Color Codes

The following abbreviations are used to identify wire colors in the circuit schematics:

| | |
|---|---|
| WHT | White |
| YEL | Yellow |
| BLK | Black |
| BLU | Blue |
| GRN | Green |
| RED | Red |
| ORN | Orange |
| PNK | Pink |
| BRN | Brown |
| GRY | Gray |
| PUR | Purple |
| LT BLU | Light Blue |
| LT GRN | Light Green |

The wire insulation has one color or one color with another color stripe. The second color is the stripe.

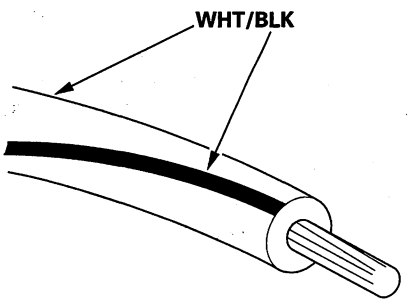


### How to Check for DTCs with the Honda Diagnostic System (HDS)

NOTE: For specific operations, refer to the user's manual that came with the Honda Diagnostic System (HDS).

1. Connect the HDS to the data link connector (A) located under the driver's side of the dashboard.

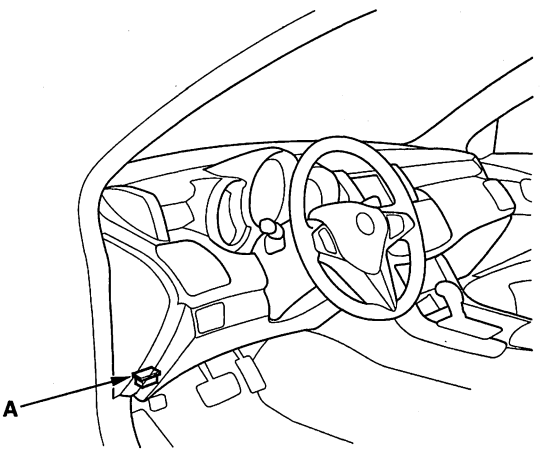


2. Turn the ignition switch ON (II).
3. Make sure the HDS communicates with the vehicle, if it doesn't, troubleshoot the DLC circuit (see page 11-229).
4. Enter the BODY ELECTRICAL then select the TEST MODE menu.
5. Check for DTCs with the HDS.
6. If any DTCs are indicated, note them, and go to the indicated DTC troubleshooting.



BACK

Protected by AR



# Relay and Control Unit Locations

## Engine Compartment

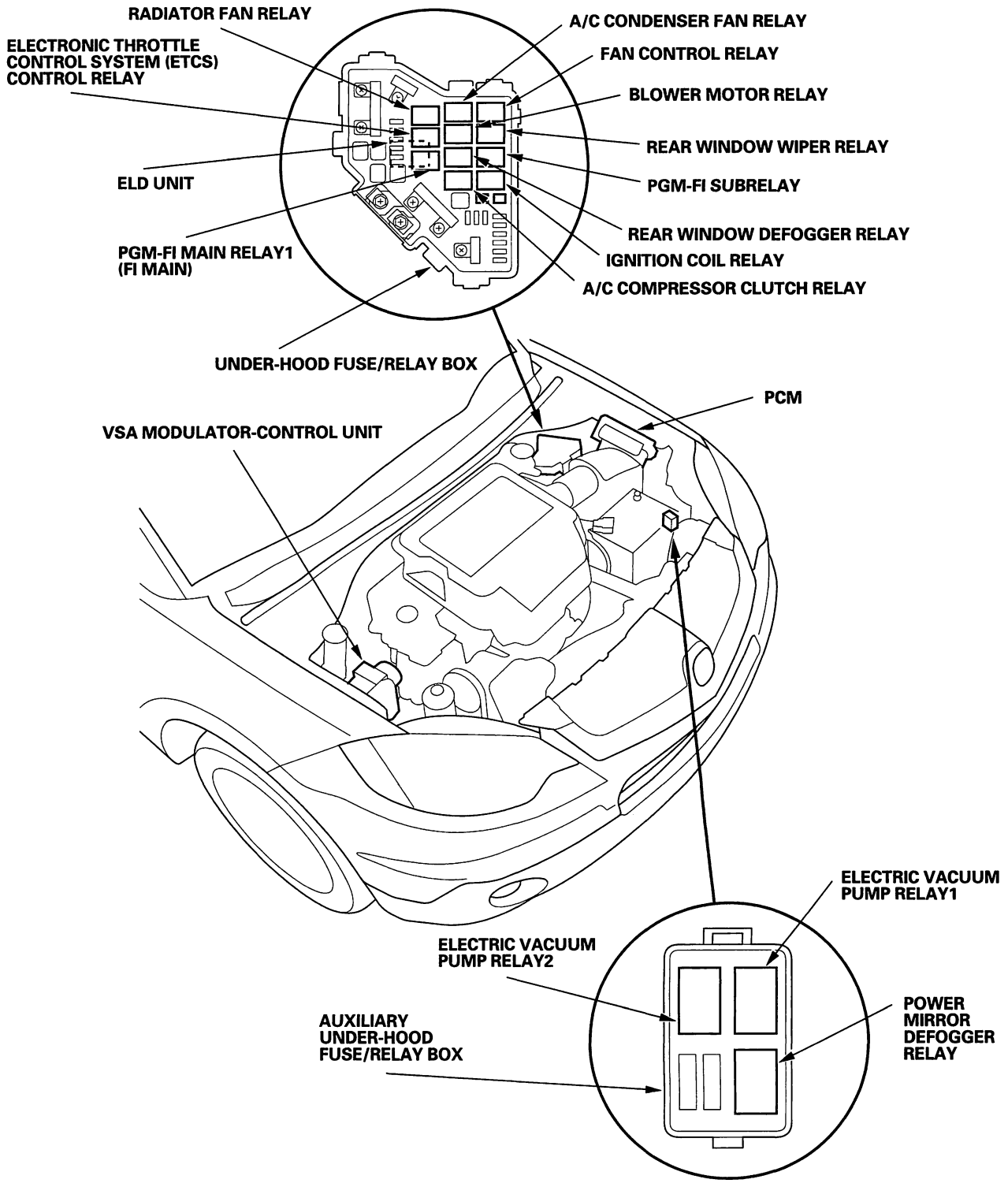

Protected by AR

# Relay and Control Unit Locations

## Dashboard

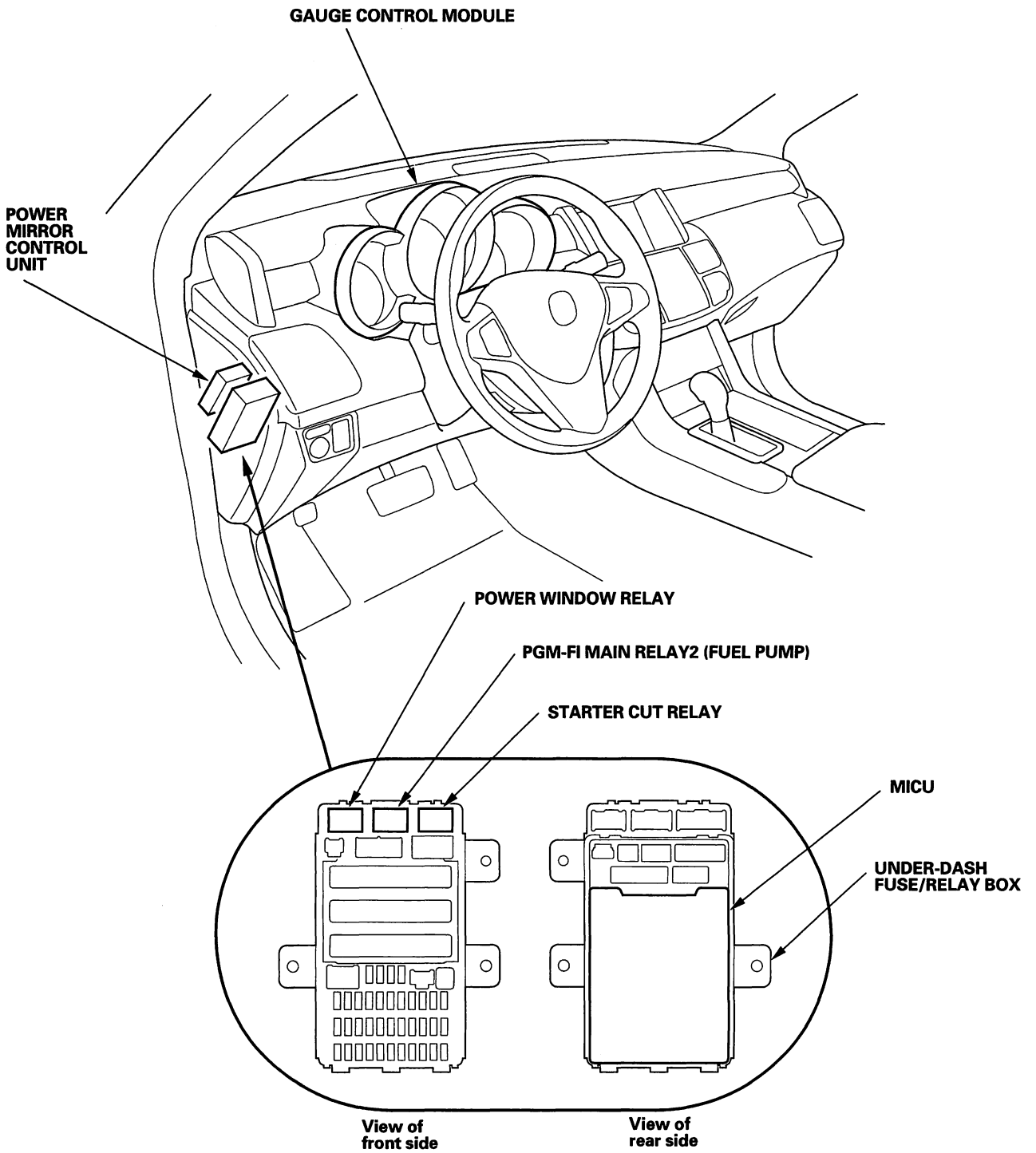




BACK

Protected by AR



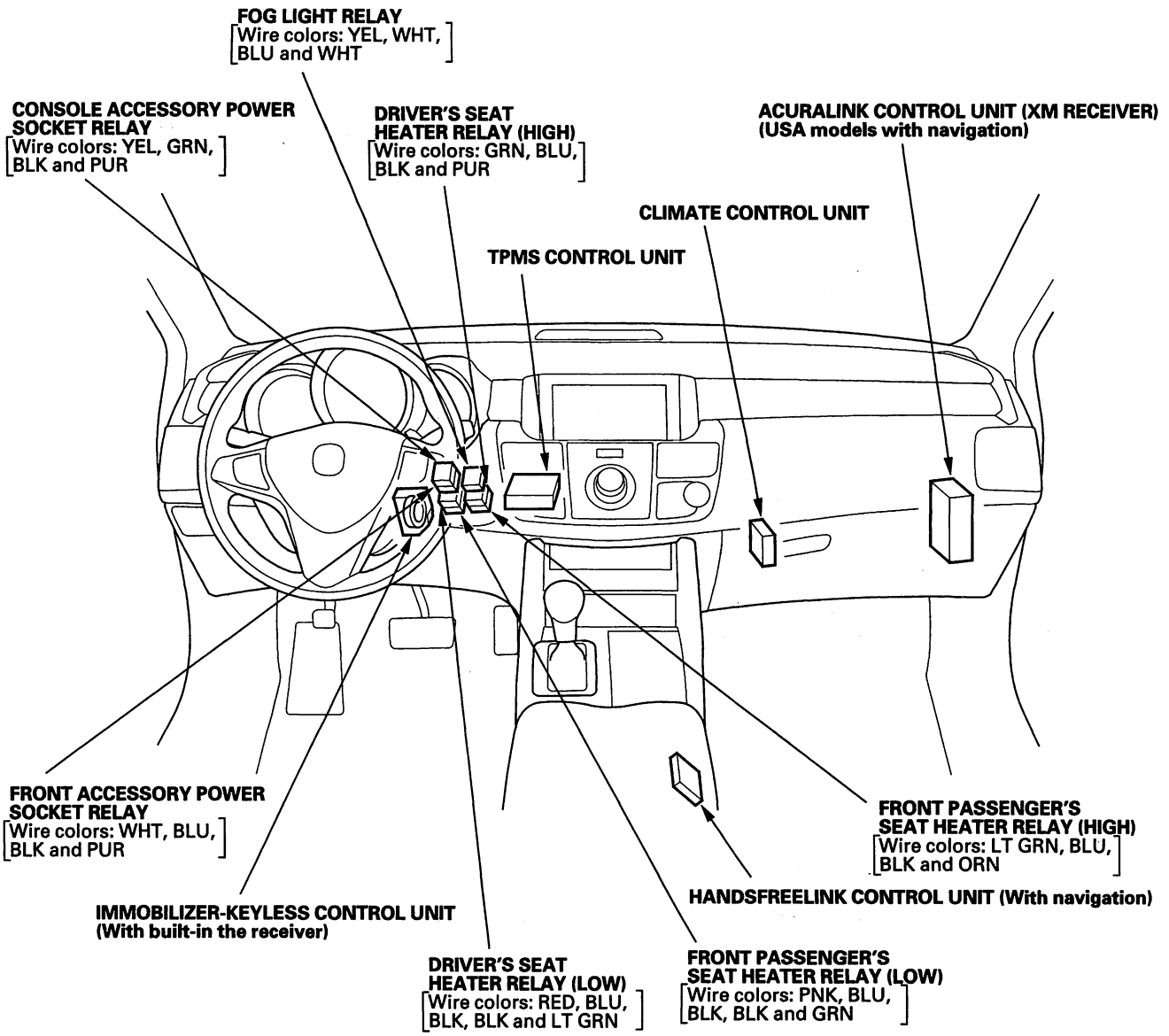


(cont'd)

Protected by AR

# Relay and Control Unit Locations

## Dashboard (cont'd)

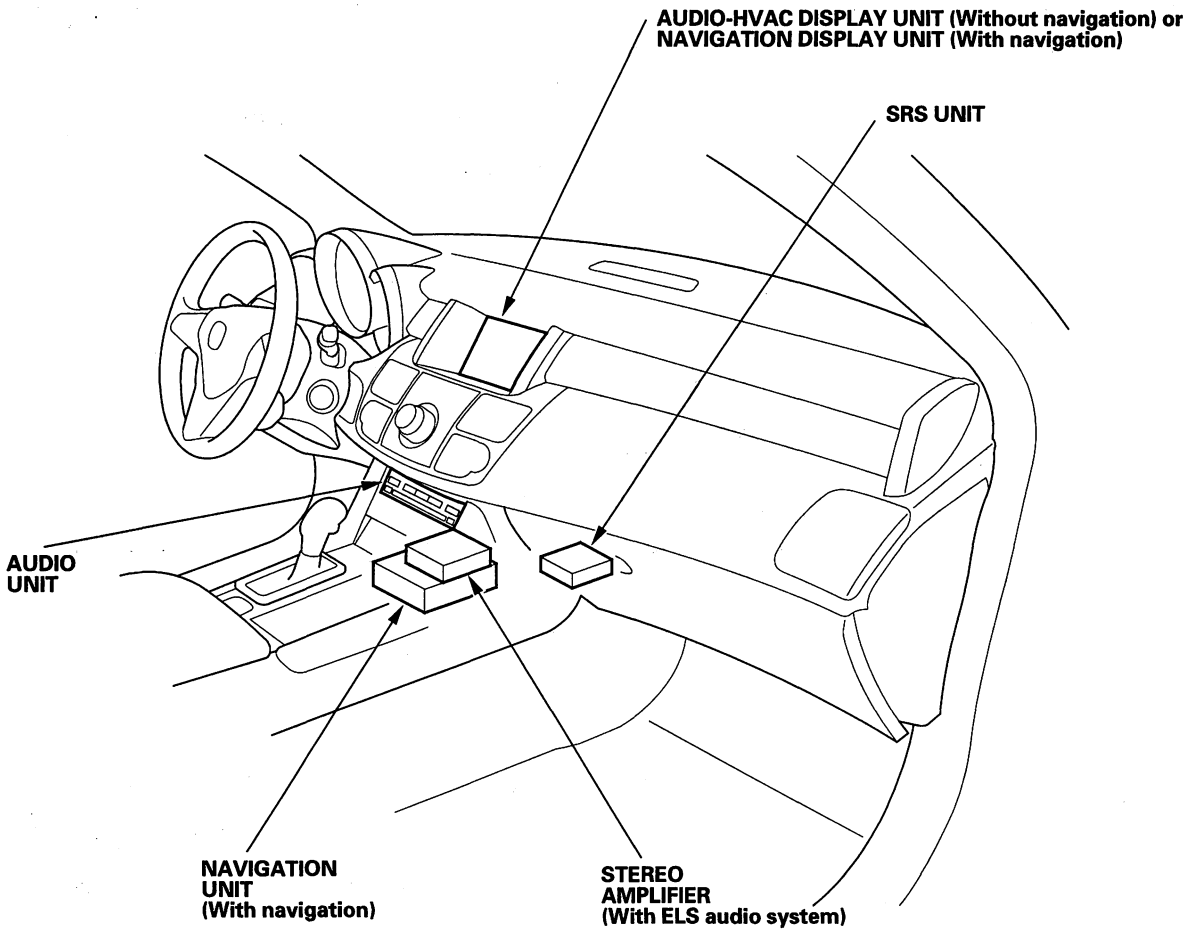




BACK

Protected by AR



## Door and Seat

### Driver's Door

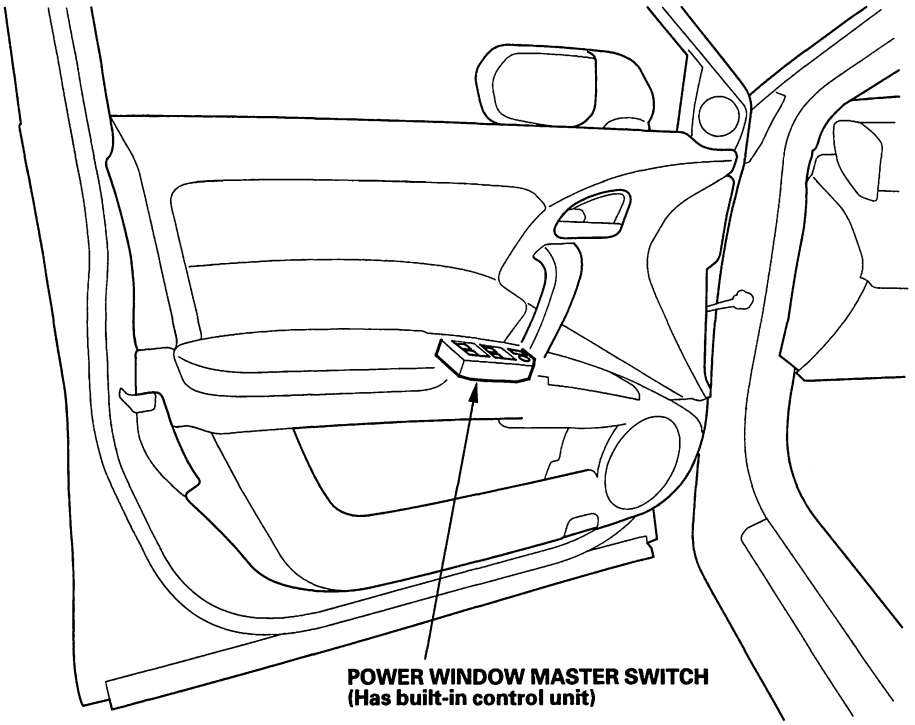


### Front Passenger's Seat

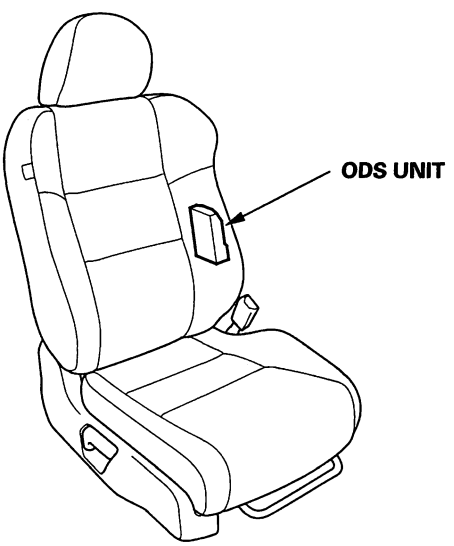

Protected by AR

# Relay and Control Unit Locations

## Rear and Roof

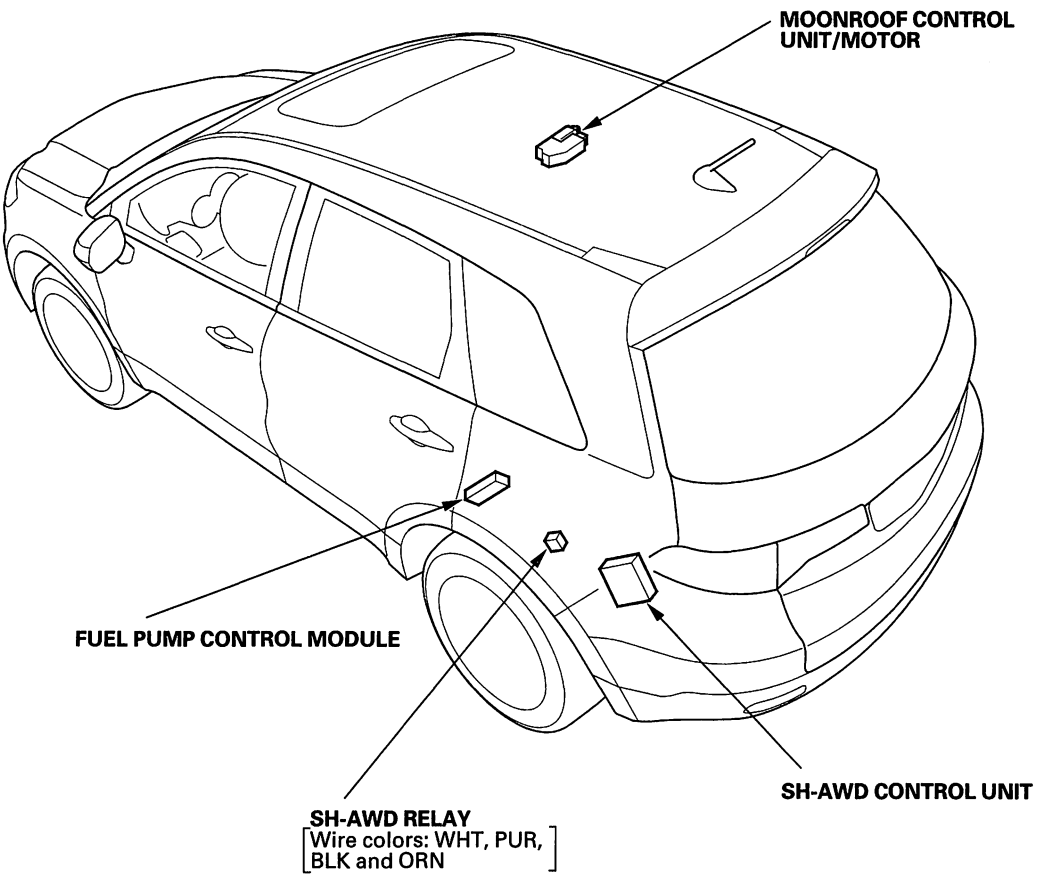




BACK

Protected by AR



## Connector Index

Identification numbers have been assigned to in-line connectors, junction connectors, and terminals. The number is preceded by the letter "C" for connectors "G" for ground terminals or "T" for non-ground terminals.

| Harness | Location | | | |
|---|---|---|---|---|
| | Engine Compartment | Dashboard | Others (Floor, Door, Tailgate, and Roof) | Notes |
| A/C wire harness | | C206<br>G571 | | (see page 22-48) |
| Battery ground cable | (—), G1 | | | (see page 22-14) |
| Cable reel subharness | | | | (see page 22-49) |
| Dashboard wire harness (View of driver's side) | | C203 through C205, C208 through C211, C401, C402, C501, C502<br>G501 | | (see page 22-28) |
| Dashboard wire harness (View of middle) | | C403 through C405<br>G502, G503, G504, G506 | | (see page 22-30) |
| Dashboard wire harness (View of passenger's side) | | C302 through C307, C551, C552<br>G505 | | (see page 22-32) |
| Driver's door subharness | | | C503 | (see page 22-44) |
| Driver's door wire harness | | C501, C502 | C503 | (see page 22-44) |
| Driver's seat subharness | | | C702 | (see page 22-50) |
| Driver's seat wire harness | | | C701, C702 | (see page 22-50) |
| Engine compartment wire harness (Left branch) | C101, C104<br>G201, G202 | C201 through C207<br>G451 | | (see page 22-22) |
| Engine compartment wire harness (Right branch) | C301 | C301 through C303<br>G401, G402 | | (see page 22-26) |
| Engine ground cable | T1, G2 | | | (see page 22-14) |
| Engine wire harness | C102 through C107<br>C101 | | | (see page 22-18) |
| Front passenger's door subharness | | | C553 | (see page 22-45) |
| Front passenger's door wire harness | | C551, C552 | C553 | (see page 22-45) |
| Left rear door wire harness | | | C601 | (see page 22-46) |
| Left side wire harness | | C201, C202, C208, C209 | C601, C751, C752, C801, C802<br>G601, G602 | (see page 22-34) |
| Left TPMS subharness | C211 | | | (see page 22-16) |
| Moonroof wire harness | | C210 | | (see page 22-42) |
| ODS unit harness | | | C703 | (see page 22-51) |
| Rear differential subharness | | | C751, C752<br>T15 | (see page 22-43) |
| Right rear door wire harness | | | C651 | (see page 22-47) |
| Right side wire harness | | C301, C304, C305 | C651<br>G651 | (see page 22-36) |
| Right TPMS subharness | C306 | | | (see page 22-16) |
| Shift solenoid wire harness | C107 | | | (see page 22-18) |
| SRS wire harness (Left branch) | | | C701<br>G551 | (see page 22-38) |
| SRS wire harness (Right branch) | | C405 | C703<br>G552 | (see page 22-39) |
| Starter cable | (+), C101, C102<br>T3, T101, T102, T103 | | | (see page 22-16) |
| Tailgate subharness | | | C801 through C804 | (see page 22-40) |
| Tailgate wire harness | | | C803, C804 | (see page 22-40) |
| Transmission ground cable | T2, G3 | | | (see page 22-14) |
| Transmission range switch subharness | C103 | | | (see page 22-18) |

Protected by AR

# Connectors and Harnesses

## Connector to Harness Index

### Battery Ground Cable

| Connector or Terminal | Ref | Cavities | Location | Connects to | Notes |
|---|---|---|---|---|---|
| (—) | 3 | | Left side of engine compartment | Battery negative terminal | |
| G1 | 4 | | Left side of engine compartment | Body ground, via battery ground cable | |

### Engine Ground Cable

| Connector or Terminal | Ref | Cavities | Location | Connects to | Notes |
|---|---|---|---|---|---|
| T1 | 1 | | Right side of engine compartment | Engine | |
| G2 | 6 | | Right side of engine compartment | Body ground, via engine ground cable | |

### Transmission Ground Cable

| Connector or Terminal | Ref | Cavities | Location | Connects to | Notes |
|---|---|---|---|---|---|
| T2 | 5 | | Left side of engine compartment | Transmission housing | |
| G3 | 2 | | Left side of engine compartment | Body ground, via transmission ground cable | |



BACK

Protected by AR



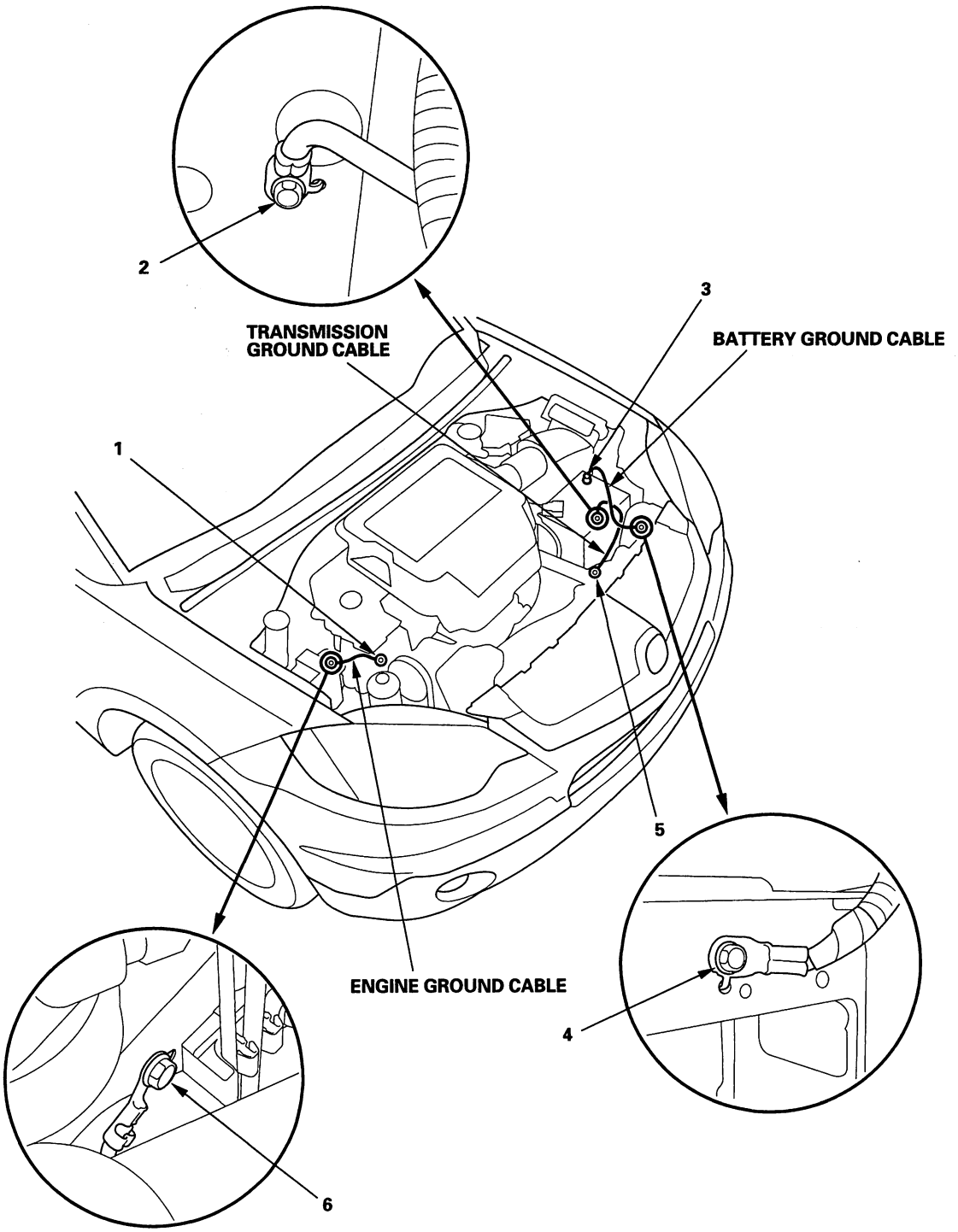

Protected by AR



## Connector to Harness Index (cont'd)

### Starter Cable

| Connector or Terminal | Ref | Cavities | Location | Connects to | Notes |
|---|---|---|---|---|---|
| A/C compressor | 1 | 3 | Right side of engine compartment | | |
| Alternator | 5 | 4 | Right side of engine compartment | | |
| Knock sensor | 7 | 1 | Middle of engine | | |
| MAF sensor | 10 | 5 | Left side of engine compartment | | |
| Starter solenoid | 9 | 1 | Middle of engine compartment | | |
| C101 | 13 | 1 | Left side of engine compartment | Engine compartment wire harness (see page 22-22) | |
| C102 | 6 | 13 | Middle of engine compartment | Engine wire harness (see page 22-18) | |
| (+) | 16 | | Middle of engine compartment | Battery (+) terminal | |
| T3 | 8 | | Middle of engine compartment | Starter | |
| T101 | 11 | | Left side of engine compartment | Under-hood fuse/relay box (see page 22-52) | |
| T102 | 12 | | Left side of engine compartment | Under-hood fuse/relay box (see page 22-52) | |
| T103 | 4 | | Right side of engine compartment | Alternator | |

### Left TPMS Subharness

| Connector or Terminal | Ref | Cavities | Location | Connects to | Notes |
|---|---|---|---|---|---|
| Left front initiator | 15 | 3 | Left side of engine compartment | | |
| C211 | 14 | 4 | Under left side of dash | Dashboard wire harness (see page 22-28) | |

### Right TPMS Subharness

| Connector or Terminal | Ref | Cavities | Location | Connects to | Notes |
|---|---|---|---|---|---|
| Right front initiator | 2 | 3 | Right side of engine compartment | | |
| C306 | 3 | 4 | Under right side of dash | Dashboard wire harness (see page 22-32) | |



BACK

Protected by AR



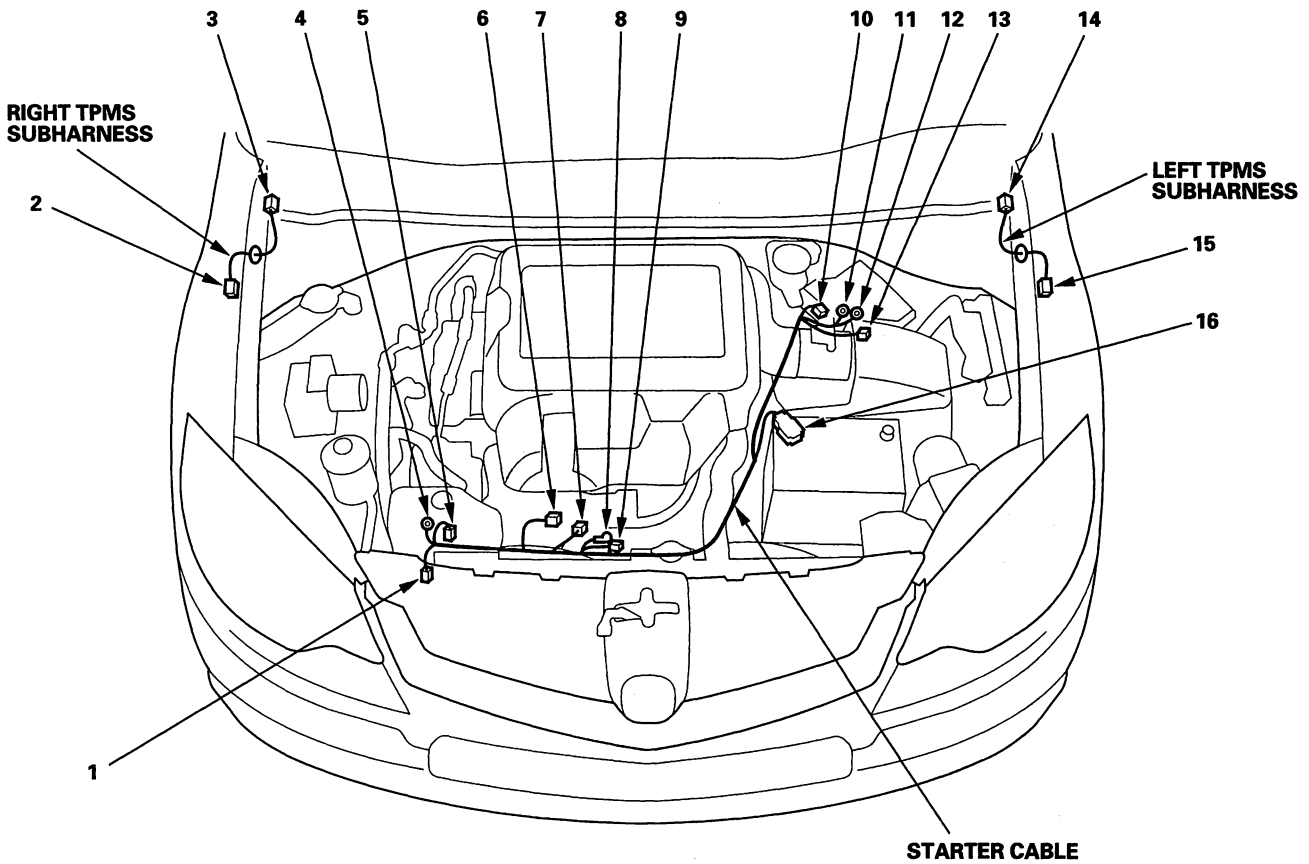


BACK

Protected by AR



## Connector to Harness Index (cont'd)

### Engine Wire Harnes

| Connector or Terminal | Ref | Cavities | Location | Connects to | Notes |
|---|---|---|---|---|---|
| ATF temperature sensor | 29 | 2 | Transmission housing | | |
| A/F sensor (sensor 1) | 47 | 4 | Right side of engine compartment | | |
| A/T clutch pressure control solenoid valve A | 24 | 2 | Transmisson housing | | |
| A/T clutch pressure control solenoid valve B | 25 | 2 | Transmission housing | | |
| A/T clutch pressure control solenoid valve C | 19 | 2 | Transmission housing | | |
| Turbocharger boost sensor | 35 | 3 | Left side of engine | | |
| CKP sensor | 44 | 3 | Under right side of engine | | |
| CMP sensor A | 9 | 3 | Left side of engine | | |
| CMP sensor B | 13 | 3 | Left side of engine | | |
| Engine coolant temperature (ECT) sensor 1 | 10 | 2 | Left side of engine | | |
| EVAP canister purge valve | 12 | 2 | Left side of engine | | |
| Ignition coil No. 1 | 3 | 3 | Middle of engine | | |
| Ignition coil No. 2 | 4 | 3 | Middle of engine | | |
| Ignition coil No. 3 | 5 | 3 | Middle of engine | | |
| Ignition coil No. 4 | 6 | 3 | Middle of engine | | |
| Injector No. 1 | 46 | 2 | Middle of engine | | |
| Injector No. 2 | 45 | 2 | Middle of engine | | |
| Injector No. 3 | 42 | 2 | Middle of engine | | |
| Injector No. 4 | 41 | 2 | Middle of engine | | |
| Intake air temperature (IAT) sensor | 40 | 2 | Middle of engine | | |
| Input shaft (mainshaft) speed sensor | 30 | 3 | Transmission Housing | | |
| MAP sensor | 38 | 3 | Middle of engine | | |
| Oil pressure switch | 48 | 1 | Under right side of engine | | |
| Output shaft (countershaft) speed sensor | 28 | 3 | Transmission housing | | |
| PCM connector B | 18 | 44 | Left side of engine compartment | | |
| PCM connector C | 17 | 44 | Left side of engine compartment | | |
| Rocker arm oil control solenoid | 1 | 2 | Rear side engine | | |
| Rocker arm oil pressure switch | 2 | 2 | Rear side of engine | | |
| Secondary HO2S (Sensor 2) | 14 | 4 | Left side of engine | | |
| TP sensor/throttle actuator (throttle body) | 43 | 6 | Middle of engine | | |
| Turbocharger boost control solenoid valve | 8 | 2 | Rear side of engine | | |
| Turbocharger bypass control solenoid valve | 36 | 2 | Middle of engine | | |
| Turbocharger wastegate control solenoid valve | 7 | 2 | Rear side of engine | | |
| VTC oil control solenoid valve | 49 | 2 | Rear side of engine | | |
| 2nd clutch transmission fluid pressure switch | 11 | 1 | Transmission housing | | |
| 3rd clutch transmission fluid pressure switch | 31 | 1 | Transmission housing | | |
| 4th clutch transmission fluid pressure switch | 21 | 1 | Transmission housing | | |



BACK

Protected by AR



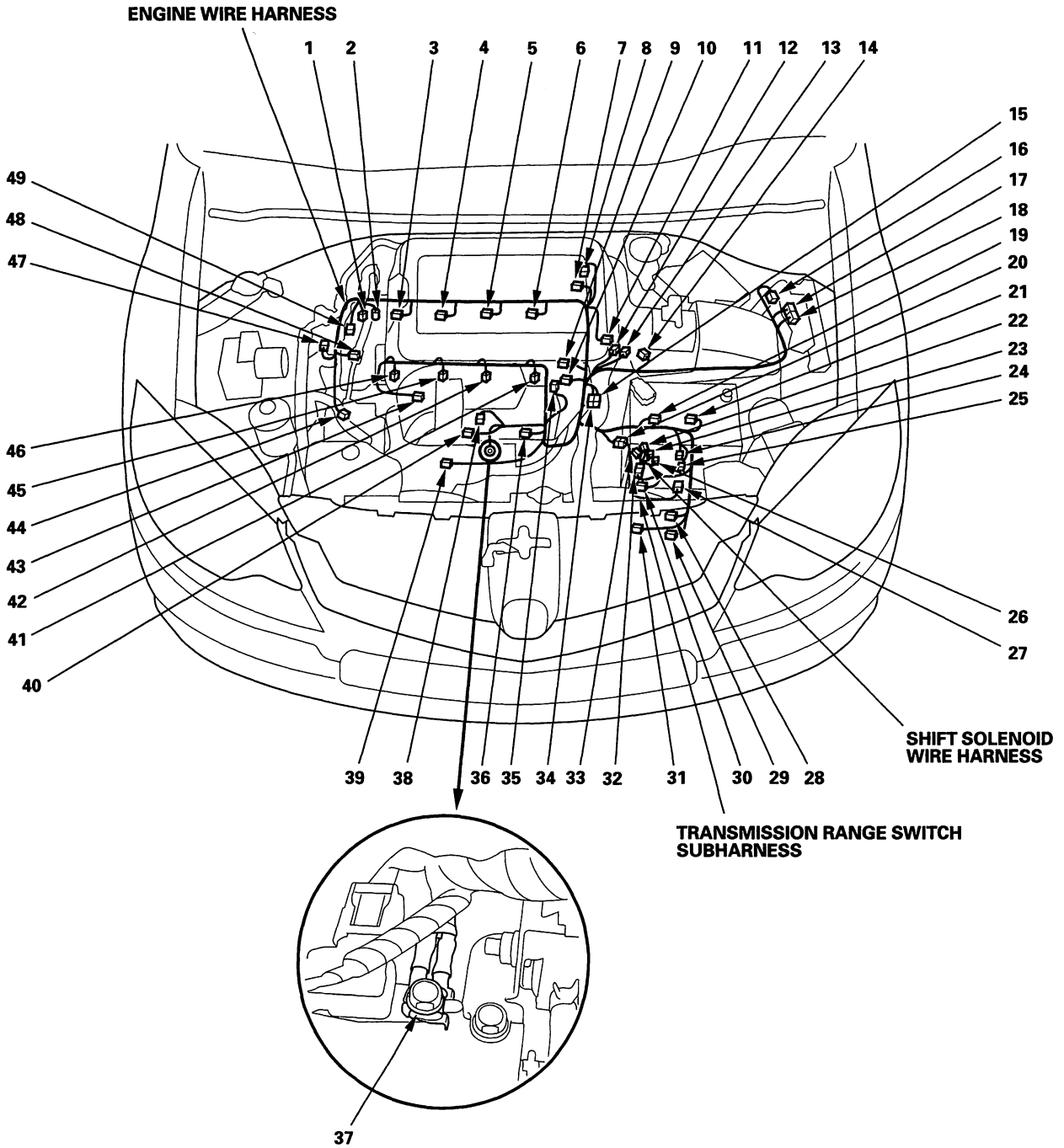


(cont'd)

BACK

Protected by AR



## Connector to Harness Index (cont'd)

### Engine Wire Harness (cont'd)

| Connector or Terminal | Ref | Cavities | Location | Connects to | Notes |
|---|---|---|---|---|---|
| C102 | 39 | 13 | Middle of engine compartment | Starter cable (see page 22-16) | |
| C103 | 20 | 10 | Transmission housing | Transmission range switch subharness | |
| C104 | 16 | 23 | Left side of engine | Engine compartment wire harness (see page 22-22) | |
| C105 (Junction connector) | 34 | 24 | Left side of engine | | |
| C106 (Junction connector) | 15 | 12 | Left side of engine | | |
| C107 | 32 | 5 | Transmission housing | Shift solenoid wire harness | |
| G101 | 37 | | Middle of engine | Engine ground, via engine wire harness | |

### Transmission Range Switch Subharness

| Connector or Terminal | Ref | Cavities | Location | Connects to | Notes |
|---|---|---|---|---|---|
| Transmission range switch | 27 | 10 | Transmission housing | | |
| C103 | 20 | 10 | Transmission housing | Engine wire harness | |

### Shift Solenoid Wire Harness

| Connector or Terminal | Ref | Cavities | Location | Connects to | Notes |
|---|---|---|---|---|---|
| Shift solenoid valve A | 23 | 1 | Transmission housing | | |
| Shift solenoid valve B | 33 | 1 | Transmission housing | | |
| Shift solenoid valve C | 22 | 1 | Transmission housing | | |
| Shift solenoid valve D | 26 | 1 | Transmission housing | | |
| C107 | 32 | 5 | Transmission housing | Engine wire harness | |



BACK

Protected by AR



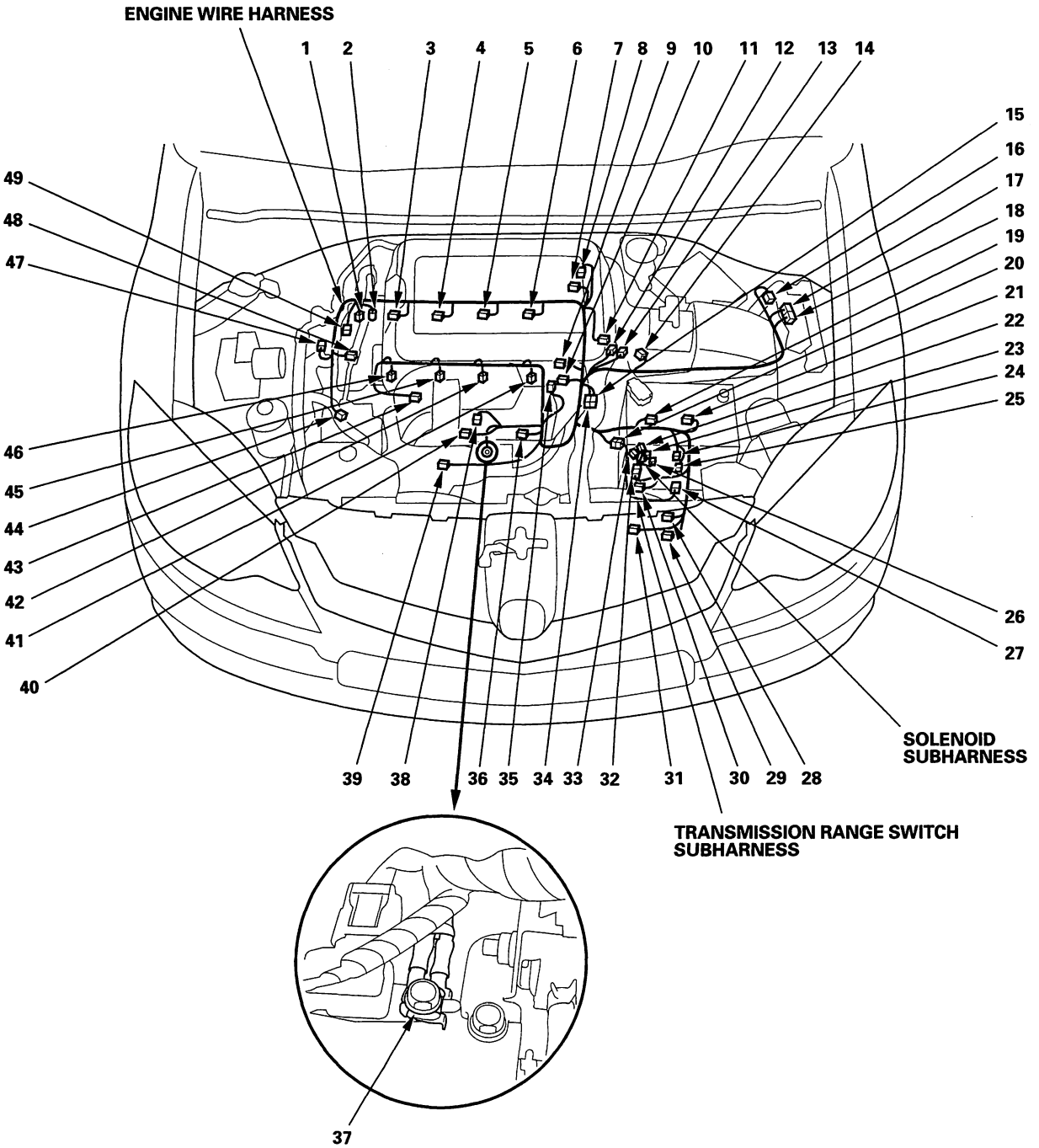

Protected by AR



## Connector to Harness Index (cont'd)

### Engine Compartment Wire Harness (Left branch)

| Connector or Terminal | Ref | Cavities | Location | Connects to | Notes |
|---|---|---|---|---|---|
| Accelerator pedal position sensor | 13 | 6 | Under left side of dash | | |
| A/C condenser fan motor | 42 | 2 | Middle of engine compartment | | |
| Brake booster pressure sensor | 26 | 3 | Left side of engine compartment | | |
| Brake fluid level switch | 11 | 2 | Left side of engine compartment | | |
| Brake pedal position switch | 14 | 4 | Under left side of dash | | |
| Electric vacuum pump relay 1 | 45 | 4 | Left side of engine compartment | | |
| Electric vacuum pump relay 2 | 44 | 4 | Left side of engine compartment | | |
| Engine coolant temperature (ECT) sensor 2 | 40 | 2 | Middle of engine compartment | | |
| High horn | 33 | 1 | Behind left side of front bumper | | |
| Keyless buzzer | 32 | 2 | Behind left side of front bumper | | |
| Left fog light | 34 | 2 | Behind left side of front bumper | | |
| Left front impact sensor | 37 | 2 | Behind middle of front bumper | | |
| Left front parking/turn signal light | 38 | 3 | Behind left headlight | | |
| Left front side marker light | 30 | 2 | Behind left headlight | | |
| Left front wheel sensor | 28 | 2 | Left side of engine compartment | | |
| Left headlight (low) | 35 | 2 | Behind left headlight | | |
| Left headlight (high) | 36 | 2 | Behind left headlight | | |
| Outside air temperature sensor | 39 | 2 | Behind middle of front bumper | | |
| Parking brake switch | 15 | 1 | Under left side of dash | | |
| PCM connector A | 27 | 44 | Left side of engine compartment | | |
| Power mirror defogger relay | 43 | 4 | Left side of engine compartment | | |
| Radiator fan motor | 41 | 2 | Middle of engine compartment | | |
| Under-dash fuse/relay box connector F | 18 | 34 | Under left side of dash | | |
| Under-dash fuse/relay box connector G | 19 | 21 | Under left side of dash | | |
| Under-hood fuse/relay box connector A (ELD unit) (see page 22-52) | 6 | 3 | Left side of engine compartment | | |
| Under-hood fuse/relay box connector B (see page 22-52) | 10 | 1 | Left side of engine compartment | | |
| Under-hood fuse/relay box connector C (see page 22-52) | 1 | 2 | Left side of engine compartment | | |
| Under-hood fuse/relay box connector D (see page 22-52) | 3 | 8 | Left side of engine compartment | | |
| Under-hood fuse/relay box connector E (see page 22-52) | 2 | 10 | Left side of engine compartment | | |
| Under-hood fuse/relay box connector F (see page 22-52) | 5 | 20 | Left side of engine compartment | | |
| Under-hood fuse/relay box connector G (see page 22-52) | 8 | 1 | Left side of engine compartment | | |
| Under-hood fuse/relay box connector H (see page 22-52) | 9 | 1 | Left side of engine compartment | | |
| Under-hood fuse/relay box connector J (see page 22-52) | 4 | 4 | Left side of engine compartment | | |
| Under-hood fuse/relay box connector K (see page 22-52) | 7 | 2 | Left side of engine compartment | | |
| Windshield wiper motor | 16 | 5 | Under left side of cowl cover | | |



BACK

Protected by AR



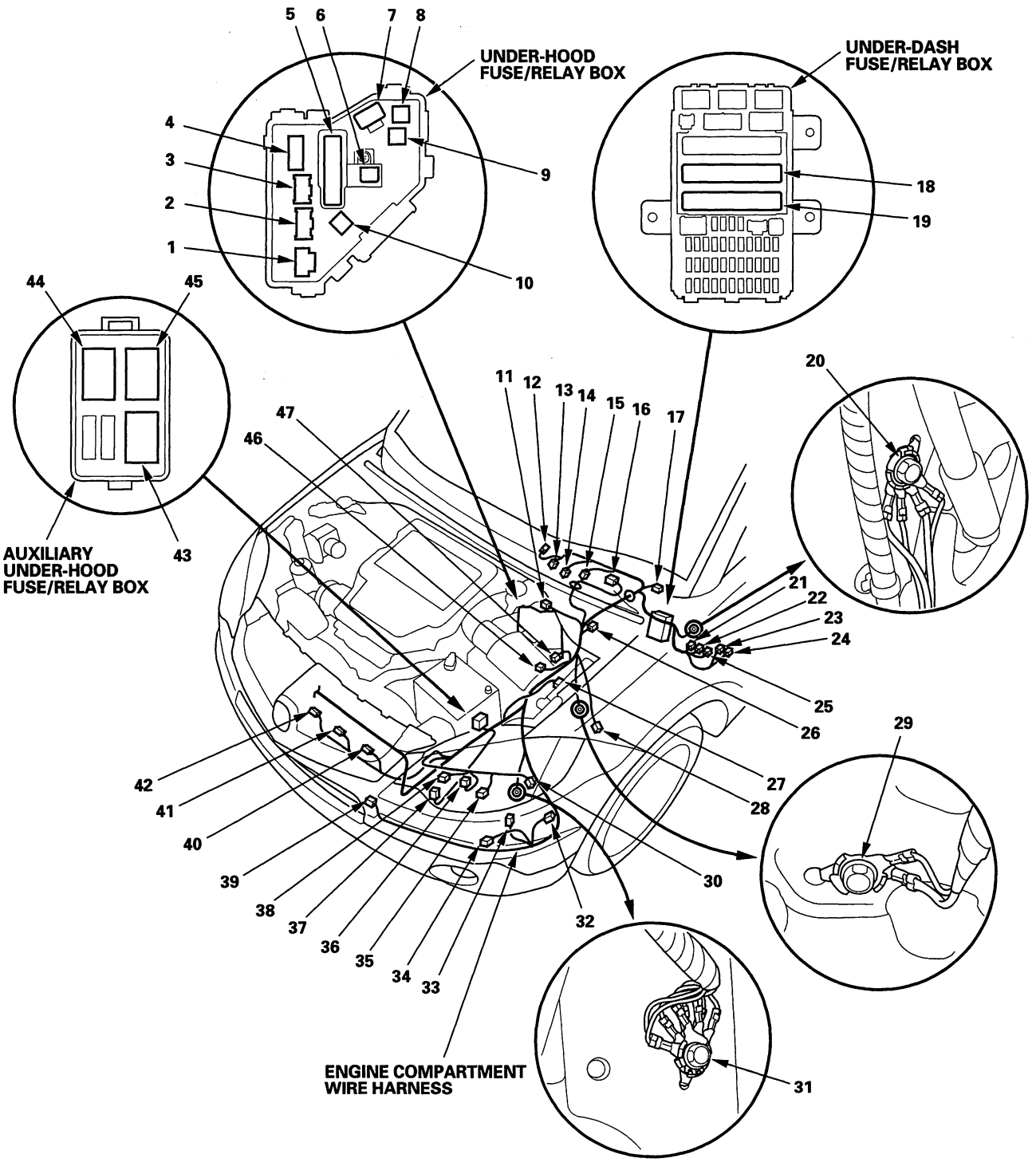


(cont'd)

BACK

Protected by AR



## Connector to Harness Index (cont'd)

### Engine Compartment Wire Harness (Left branch) (cont'd)

| Connector or Terminal | Ref | Cavities | Location | Connects to | Notes |
|---|---|---|---|---|---|
| C101 | 46 | 1 | Left side of engine compartment | starter cable (see page 22-16) | |
| C104 | 47 | 23 | Left side of engine compartment | Engine wire harness (see page 22-18) | |
| C201 | 24 | 13 | Under left side of dash | Left side wire harness (see page 22-34) | |
| C202 | 23 | 2 | Under left side of dash | Left side wire harness (see page 22-34) | |
| C203 | 25 | 20 | Under left side of dash | Dashboard wire harness (see page 22-28) | |
| C204 | 22 | 4 | Under left side of dash | Dashboard wire harness (see page 22-28) | |
| C205 | 21 | 4 | Under left side of dash | Dashboard wire harness (see page 22-28) | |
| C206 | 12 | 12 | Under left side of dash | A/C wire harness (see page 22-48) | |
| C207 (Junction connector) | 17 | 12 | Under left side of dash | | |
| G201 | 31 | | Behind left side of front bumper | Body ground, via engine compartment wire harness | |
| G202 | 29 | | Left side of engine compartment | Body ground, via engine compartment wire harness | |
| G451 | 20 | | Behind left kick panel | Body ground, via engine compartment wire harness | |



BACK

Protected by AR



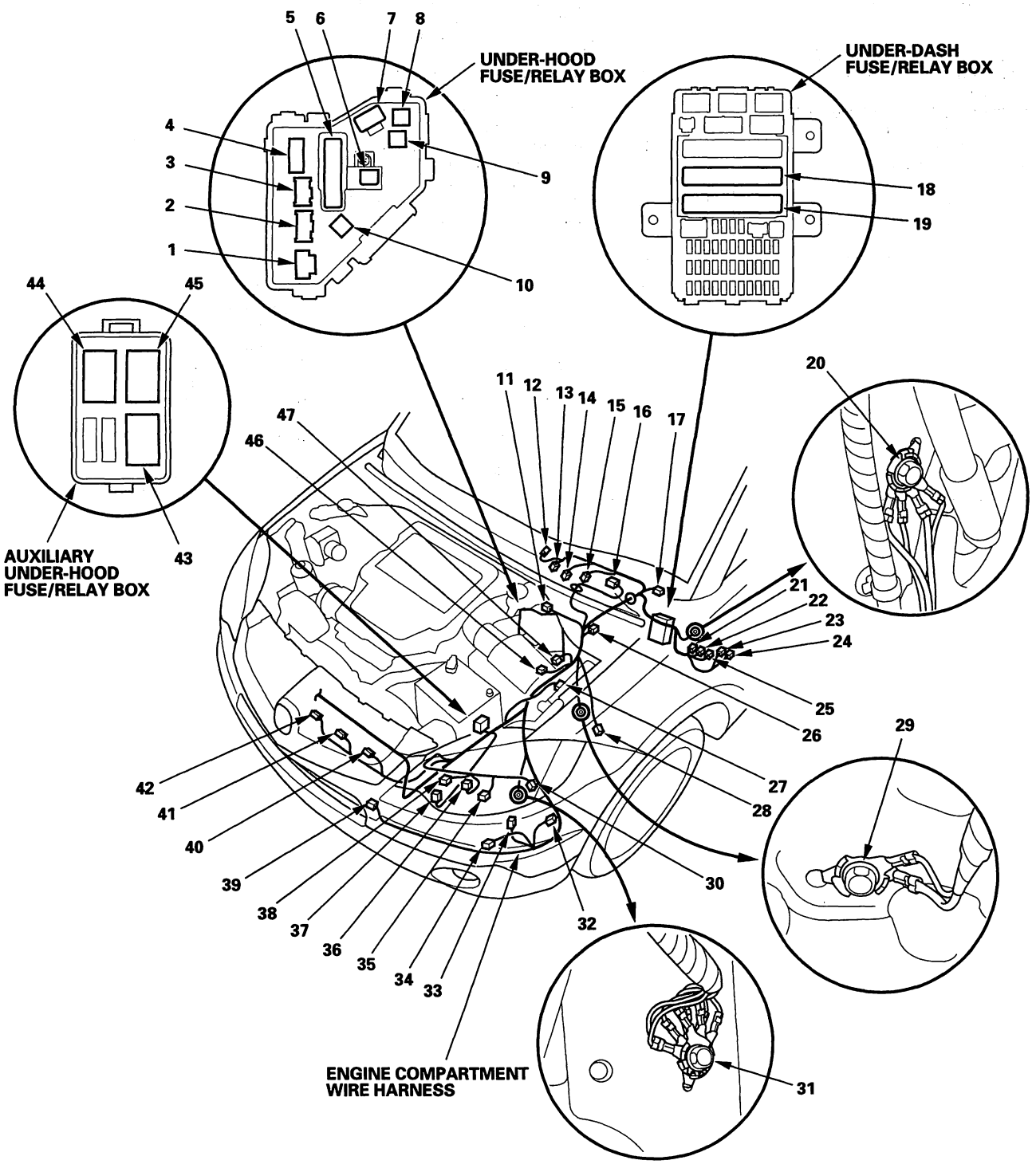


BACK

Protected by AR



## Connector to Harness Index (cont'd)

### Engine Compartment Wire Harness (Right branch)

| Connector or Terminal | Ref | Cavities | Location | Connects to | Notes |
|---|---|---|---|---|---|
| A/C pressure switch | 5 | 3 | Right side of engine compartment | | |
| Electric vacuum pump | 6 | 2 | Right side of engine compartment | | |
| Hood switch | 8 | 2 | Front of engine compartment | | |
| Low horn | 13 | 1 | Behind right side of front bumper | | |
| Power steering pressure (PSP) switch | 3 | 2 | Right side of engine compartment | | |
| Right front impact sensor | 10 | 2 | Behind middle of front bumper | | |
| Right fog light | 12 | 2 | Behind right side of front bumper | | |
| Right front parking/turn signal light | 9 | 3 | Behind right headlight | | |
| Right front side marker light | 17 | 2 | Behind right headlight | | |
| Right front wheel sensor | 18 | 2 | Right side of engine compartment | | |
| Right headlight (high) | 7 | 2 | Behind right headlight | | |
| Right headlight (low) | 11 | 2 | Behind right headlight | | |
| VSA modulator-control unit | 4 | 46 | Right side of engine compartment | | |
| Windshield/rear window washer motor | 14 | 2 | Behind right side of front bumper | | |
| Washer fluid level switch | 15 | 2 | Behind right side of front bumper | | Canada models |
| C301 | 19 | 2 | Under right side of dash | Right side wire harness (see page 22-36) | |
| C302 | 20 | 6 | Under right side of dash | Dashboard wire harness (see page 22-32) | |
| C303 | 21 | 4 | Under right side of dash | Dashboard wire harness (see page 22-32) | |
| G301 | 16 | | Behind right side of front bumper | Body ground, via engine compartment wire harness | |
| G401 | 1 | | Under right side of dash | Body ground, via engine compartment wire harness | |
| G402 | 2 | | Under right side of dash | Body ground, via engine compartment wire harness | |



BACK

Protected by AR



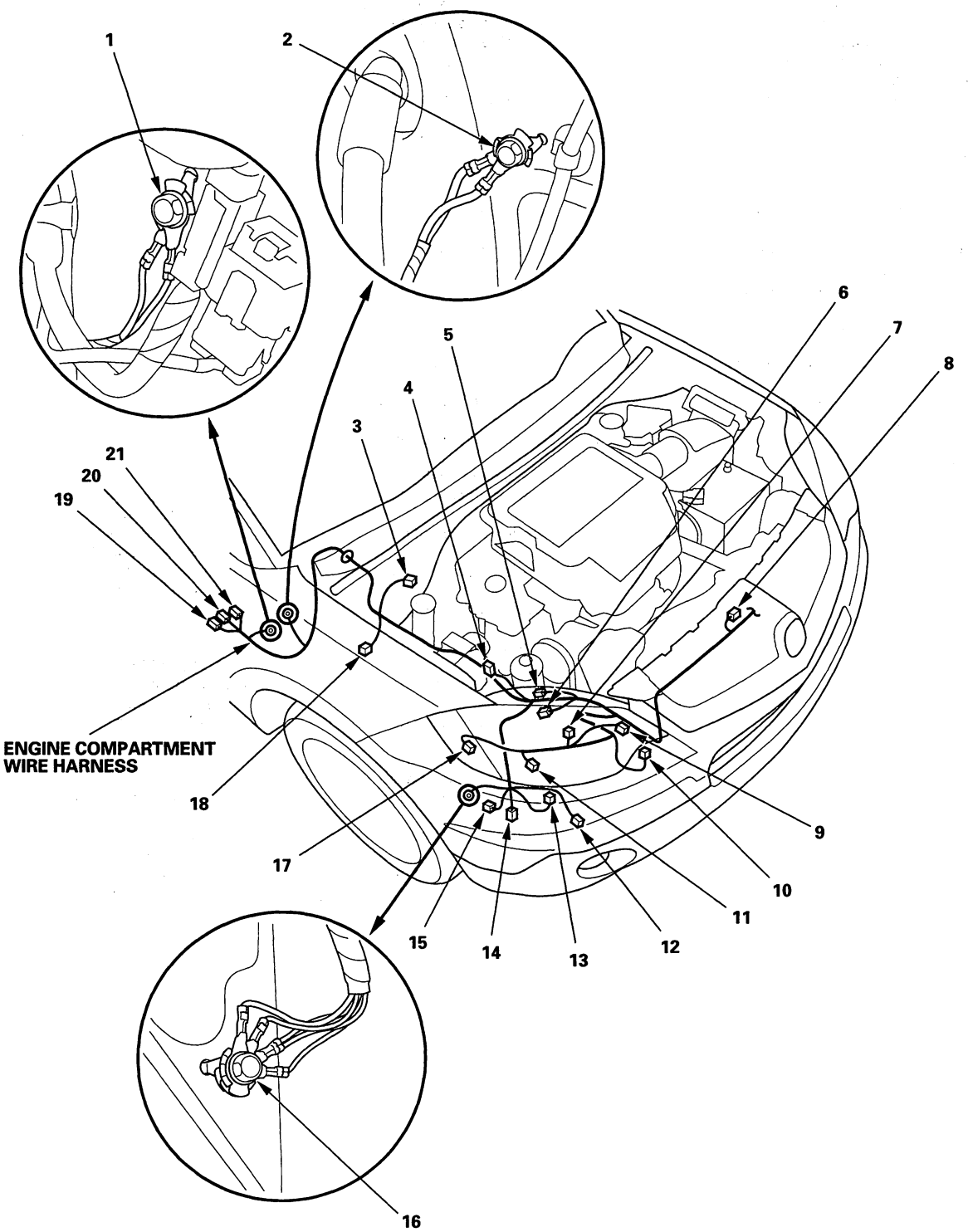

Protected by AR



## Connector to Harness Index (cont'd)

### Dashboard Wire Harness (View of driver's side)

| Connector or Terminal | Ref | Cavities | Location | Connects to | Notes |
|---|---|---|---|---|---|
| Data link connector (DLC) | 19 | 16 | Under left side of dash | | |
| Gauge control module | 16 | 36 | Behind gauge control module | | |
| Power mirror control unit | 1 | 24 | Under left side of dash | | |
| Power mirror switch | 18 | 13 | Left side of dash | | |
| Under-dash fuse/relay box connector C (see page 22-54) | 3 | 4 | Under left side of dash | | |
| Under-dash fuse/relay box connector D (see page 22-54) | 4 | 2 | Under left side of dash | | |
| Under-dash fuse/relay box connector O (see page 22-54) | 5 | 4 | Under left side of dash | | |
| Under-dash fuse/relay box connector K (see page 22-54) | 6 | 8 | Under left side of dash | | |
| Under-dash fuse/relay box connector P (see page 22-54) | 7 | 10 | Under left side of dash | | |
| Under-dash fuse/relay box connector M (see page 22-54) | 8 | 10 | Under left side of dash | | |
| Under-dash fuse/relay box connector Q (see page 22-54) | 9 | 16 | Under left side of dash | | |
| Under-dash fuse/relay box connector N (see page 22-54) | 10 | 14 | Under left side of dash | | |
| Under-dash fuse/relay box connector R (see page 22-54) | 11 | 20 | Under left side of dash | | |
| Under-dash fuse/relay box connector S (MICU) (see page 22-54) | 12 | 20 | Under left side of dash | | |
| Under-dash fuse/relay box connector T (MICU) (see page 22-54) | 13 | 34 | Under left side of dash | | |
| VSA OFF switch | 17 | 5 | Left side of dash | | |
| C203 | 25 | 20 | Under left side of dash | Engine compartment wire harness (see page 22-22) | |
| C204 | 24 | 4 | Under left side of dash | Engine compartment wire harness (see page 22-22) | |
| C205 | 26 | 4 | Under left side of dash | Engine compartment wire harness (see page 22-22) | |
| C208 | 21 | 16 | Under left side of dash | Left side wire harness (see page 22-34) | |
| C209 | 22 | 18 | Under left side of dash | Left side wire harness (see page 22-34) | |
| C210 | 23 | 20 | Under left side of dash | Moonroof wire harness (see page 22-42) | |
| C211 | 2 | 4 | Under left side of dash | Left TPMS subharness (see page 22-16) | |
| C401 (Junction connector) | 15 | 12 | Under middle of dash | | |
| C402 (Junction connector) | 14 | 12 | Under middle of dash | | |
| C501 | 28 | 18 | Under left side of dash | Driver's door wire harness (see page 22-44) | |
| C502 | 27 | 16 | Under left side of dash | Driver's door wire harness (see page 22-44) | |
| G501 | 20 | | Under left side of dash | Body ground, via dashboard wire harness | |



BACK

Protected by AR



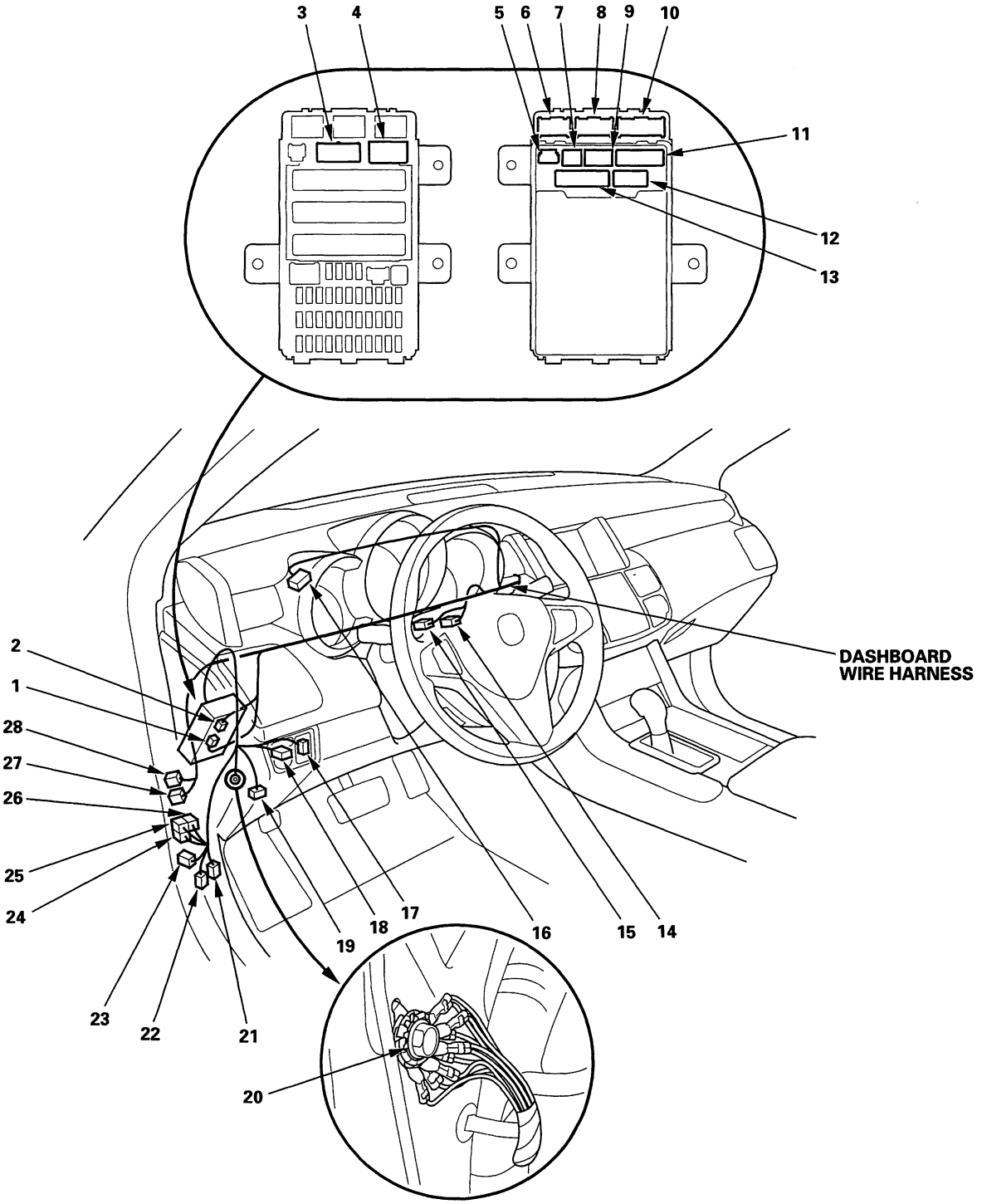

Protected by AR



## Connector to Harness Index (cont'd)

### Dashboard Wire Harness (View of middle)

| Connector or Terminal | Ref | Cavities | Location | Connects to | Notes |
|---|---|---|---|---|---|
| Audio switch panel connector A | 3 | 20 | Behind audio switch panel | | * 1 |
| Audio switch panel connector B | 9 | 5 | Behind audio switch panel | | * 1 |
| Audio-HVAC display unit | 7 | 12 | Middle of dash | | * 1 |
| Audio-HVAC subdisplay unit | 5 | 12 | Under middle of dash | | * 2 |
| Audio unit connector A | 15 | 17 | Behind audio unit | | |
| Audio unit connector B | 16 | 14 | Behind audio unit | | |
| Audio unit connector C | 14 | 28 | Behind audio unit | | |
| Audio unit connector D | 17 | 32 | Behind audio unit | | |
| A/T gear position indicator panel light/ park-pin switch | 29 | 6 | Under middle of dash | | |
| A/T shift lock solenoid | 28 | 2 | Under middle of dash | | |
| Climate control unit connector B | 12 | 16 | Under middle of dash | | |
| Console accessory power socket | 23 | 2 | Middle of dash | | |
| Console box light | 26 | 2 | Middle of dash | | |
| Driver's climate control switch | 2 | 16 | Middle of dash | | |
| Driver's seat heater switch | 22 | 6 | Middle of dash | | |
| Front accessory power socket | 20 | 2 | Middle of dash | | |
| Front center speaker | 6 | 2 | Under middle of dash | | * 2 |
| Front passenger's seat heater switch | 19 | 7 | Middle of dash | | |
| HandsFreeLink control unit | 24 | 22 | Under middle of dash | | |
| Hazard warning switch | 8 | 5 | Middle of dash | | |
| Navigation display unit | 7 | 20 | Middle of dash | | * 2 |
| Navigation service check connector | 37 | 2 | Under middle of dash | | * 2 |
| Navigation switch panel connector A | 3 | 5 | Behind navigation switch panel | | * 2 |
| Navigation switch panel connector B | 9 | 6 | Behind navigation switch panel | | * 2 |
| Navigation unit connector A | 33 | 20 | Under middle of dash | | * 2 |
| Navigation unit connector B | 30 | 14 | Under middle of dash | | * 2 |
| Navigation unit connector C | 34 | 8 | Under middle of dash | | * 2 |
| Navigation unit connector F | 31 | 5 | Under middle of dash | | * 2 |
| Navigation unit connector G | 32 | 7 | Under middle of dash | | * 2 |
| Passenger's climate control switch | 10 | 12 | Middle of dash | | |
| SRS unit connector A | 18 | 28 | Under middle of dash | | |
| Stereo amplifier connector A | 27 | 18 | Under middle of dash | | |
| Stereo amplifier connector B | 21 | 28 | Under middle of dash | | * 2 |
| Stereo amplifier connector B | 21 | 24 | Under middle of dash | | * 1 |
| Sunlight sensor | 4 | 2 | Under middle of dash | | |
| Yaw rate-lateral acceleration sensor | 35 | 4 | Under middle of dash | | |
| C403 (Junction connector) | 13 | 12 | Under middle of dash | | |
| C404 (Junction connector) | 39 | 12 | Under middle of dash | | |
| C405 | 36 | 20 | Under middle of dash | SRS wire harness (see page 22-39) | |
| G502 | 1 | | Under middle of dash | Body ground, via dashboard wire harness | |
| G503 | 38 | | Under middle of dash | Body ground, via dashboard wire harness | |
| G504 | 11 | | Under middle of dash | Body ground, via dashboard wire harness | |
| G506 | 25 | | Under middle of dash | Body ground, via dashboard wire harness | |

* 1: Without navigation
* 2: With navigation



BACK

Protected by AR



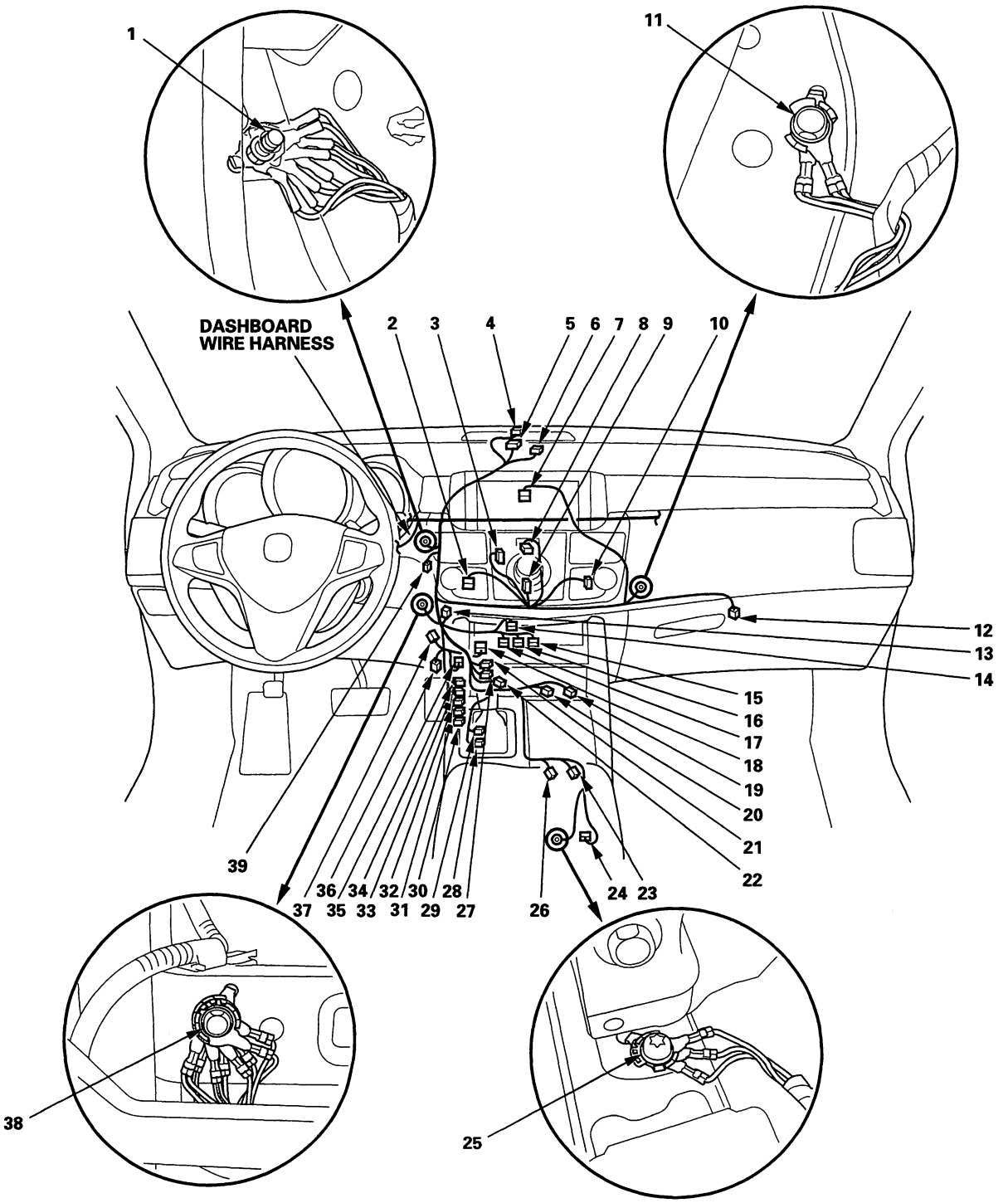


BACK

Protected by AR



## Connector to Harness Index (cont'd)

### Dashboard Wire Harness (View of passenger's side)

| Connector or Terminal | Ref | Cavities | Location | Connects to | Notes |
|---|---|---|---|---|---|
| AcuraLink control unit connector A | 31 | 20 | Under right side of dash | | * 2 |
| AcuraLink control unit connector B | 32 | 16 | Under right side of dash | | * 2 |
| Cable reel | 41 | 20 | Steering column | | |
| Combination light switch | 1 | 12 | steering column | | |
| Console accessory power socket relay | 3 | 4 | Under middle of dash | | |
| Driver's airbag inflator | 40 | 4 | Steering column | | |
| Driver's seat heater relay (high) | 8 | 4 | Under middle of dash | | |
| Driver's seat heater relay (low) | 5 | 5 | Under middle of dash | | |
| Fog light relay | 9 | 4 | Under middle of dash | | |
| Front accessory power socket relay | 4 | 4 | Under middle of dash | | |
| Front passenger's airbag inflator | 22 | 4 | Under middle of dash | | |
| Front passenger's seat heater relay (high) | 7 | 4 | Under middle of dash | | |
| Front passenger's seat heater relay (low) | 6 | 5 | Under middle of dash | | |
| Glove box light | 35 | 2 | Under middle of dash | | |
| Ignition switch | 38 | 7 | Steering column | | |
| Ignition key switch | 37 | 6 | Steering column | | |
| Immobilizer-keyless control unit | 39 | 7 | Steering column | | |
| Junction box connector A | 21 | 6 | Under middle of dash | | |
| Junction box connector B | 10 | 6 | Under middle of dash | | |
| Junction box connector C | 15 | 14 | Under middle of dash | | |
| Junction box connector D | 18 | 6 | Under middle of dash | | |
| Junction box connector E | 19 | 18 | Under middle of dash | | |
| Junction box connector F | 20 | 10 | Under middle of dash | | |
| Junction box connector G | 17 | 14 | Under middle of dash | | |
| Junction box connector H | 13 | 10 | Under middle of dash | | |
| Junction box connector J | 11 | 22 | Under middle of dash | | |
| Junction box connector K | 16 | 14 | Under middle of dash | | |
| Junction box connector L | 12 | 10 | Under middle of dash | | |
| Junction box connector M | 14 | 10 | Under middle of dash | | |
| Steering angle sensor | 42 | 5 | Steering column | | |
| TPMS control unit | 36 | 20 | Under middle of dash | | |
| Wiper/washer switch | 2 | 8 | Steering column | | |
| XM receiver | 31 | 14 | Under right side of dash | | * 1 |
| C302 | 27 | 6 | Under right side of dash | Engine compartment wire harness (see page 22-26) | |
| C303 | 28 | 4 | Under right side of dash | Engine compartment wire harness (see page 22-26) | |
| C304 | 29 | 18 | Under right side of dash | Right side wire harness (see page 22-36) | |
| C305 | 30 | 12 | Under right side of dash | Right side wire harness (see page 22-36) | |
| C306 | 26 | 4 | Under right side of dash | Right TPMS subharness harness (see page 22-16) | |
| C307 (Female connector) | 34 | 5 | Under right side of dash | | * 2 |
| C307 (Male connector) | 33 | 5 | Under right side of dash | | * 2 |
| C551 | 24 | 18 | Under right side of dash | Right side wire harness (see page 22-45) | |
| C552 | 25 | 8 | Under right side of dash | Right side wire harness (see page 22-45) | |
| G505 | 23 | | Under right side of dash | Body ground, via dashboard wire harness | |

* 1: USA models without AcuraLink
* 2: With AcuraLink



BACK

Protected by AR



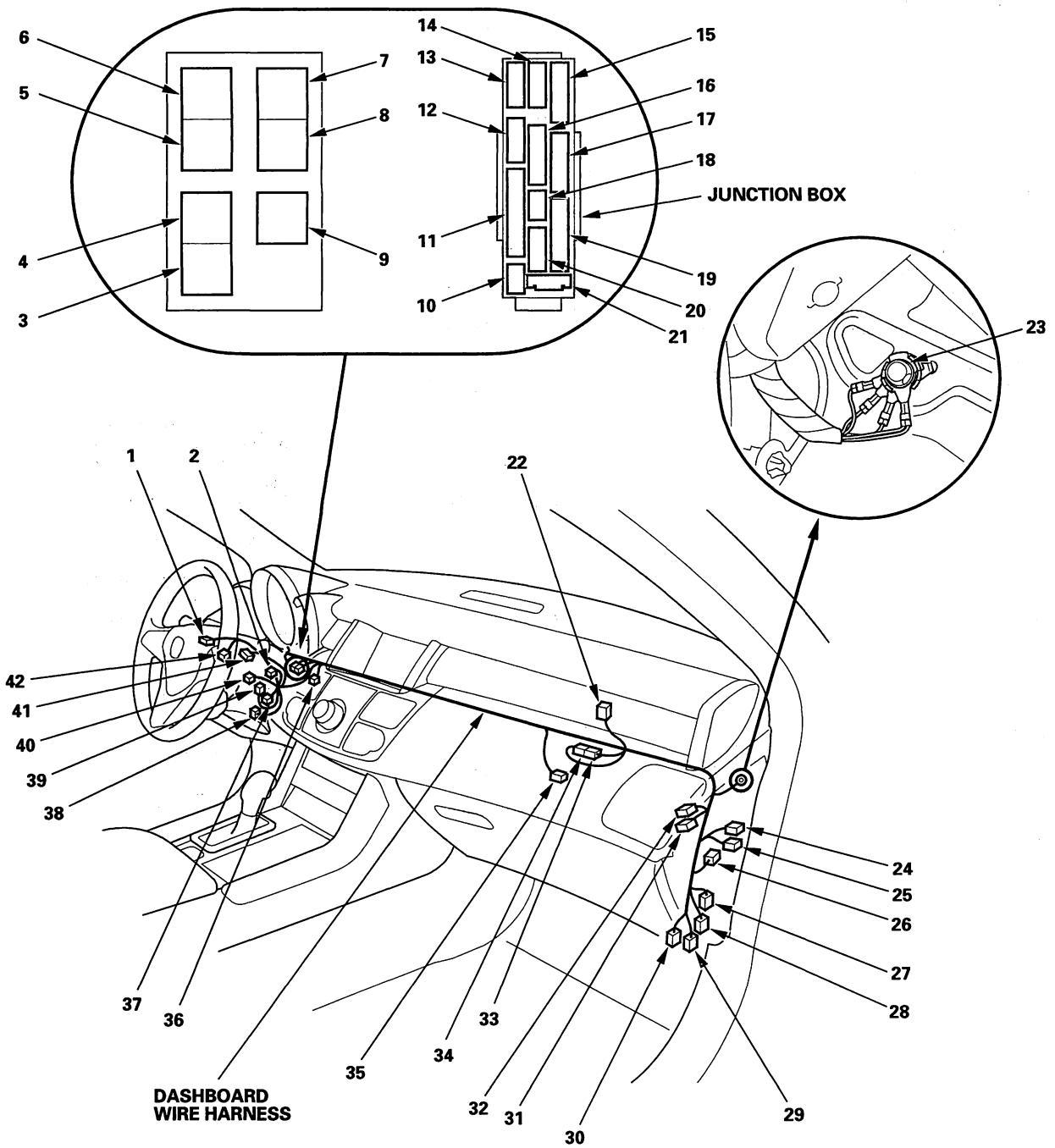

Protected by AR



## Connector to Harness Index (cont'd)

### Left Side Wire Harness

| Connector or Terminal | Ref | Cavities | Location | Connects to | Notes |
|---|---|---|---|---|---|
| Cargo light | 21 | 2 | Left side of cargo area | | |
| Driver's door switch | 4 | 1 | Left B-pillar | | |
| EVAP canister vent shut valve | 7 | 2 | Fuel tank | | |
| Fuel gauge sending unit | 8 | 4 | Fuel tank | | |
| Fuel pump control module | 25 | 10 | Left C-pillar | | |
| Fuel tank pressure (FTP) sensor | 6 | 3 | Fuel tank | | |
| Left rear door switch | 26 | 1 | Left C-pillar | | |
| Left rear initiator | 27 | 3 | Left rear of floor | | |
| Left rear side marker light | 17 | 2 | Behind left taillight | | |
| Left rear turn signal light | 18 | 2 | Behind left taillight | | |
| Left rear tweeter | 10 | 2 | Middle of tailgate | | * |
| Left rear wheel sensor | 24 | 2 | Left rear of floor | | |
| Left taillight/brake light | 16 | 3 | Behind left taillight | | |
| Secondary fuel gauge sending unit | 9 | 4 | Fuel tank | | |
| SH-AWD control unit connector A | 20 | 20 | Behind left taillight | | |
| SH-AWD control unit connector B | 19 | 8 | Behind left taillight | | |
| SH-AWD relay | 22 | 4 | Left side of cargo area | | |
| Under-dash fuse/relay box connector E (see page 22-54) | 1 | 42 | Under middle of dash | | |
| C201 | 29 | 13 | Under left side of dash | Engine compartment wire harness (see page 22-22) | |
| C202 | 28 | 2 | Under left side of dash | Engine compartment wire harness (see page 22-22) | |
| C208 | 3 | 16 | Under left side of dash | Dashboard wire harness (see page 22-28) | |
| C209 | 2 | 18 | Under left side of dash | Dashboard wire harness (see page 22-28) | |
| C601 | 5 | 18 | Left-B-pillar | Left rear door wire harness (see page 22-46) | |
| C751 | 14 | 6 | Under rear floor | Rear differential subharness (see page 22-43) | |
| C752 | 15 | 6 | Under rear floor | Rear differential subharness (see page 22-43) | |
| C801 | 11 | 20 | Rear of roof | Tailgate subharness (see page 22-40) | |
| C802 | 12 | 2 | Rear of roof | Tailgate subharness (see page 22-40) | |
| G601 | 23 | | Behind left rear lining | Body ground, via left side wire harness | |
| G602 | 13 | | Right quarter panel | Body ground, via left side wire harness | |

*: With ELS audio system



BACK

Protected by AR



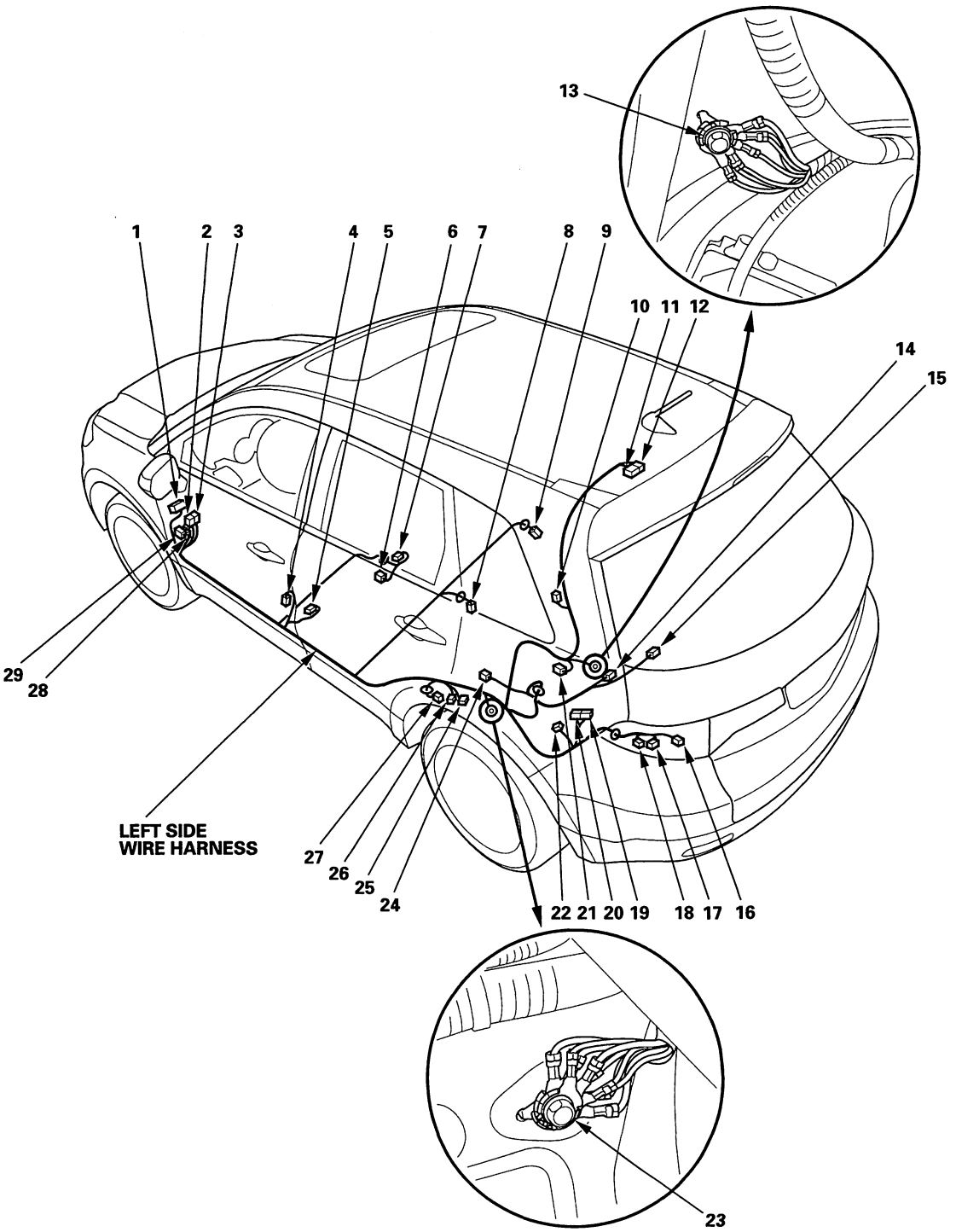

Protected by AR



## Connector to Harness Index (cont'd)

### Right Side Wire Harness

| Connector or Terminal | Ref | Cavities | Location | Connects to | Notes |
|---|---|---|---|---|---|
| Passenger's door switch | 11 | 1 | Right B-pillar | | |
| Right door switch | 16 | 1 | Right C-pillar | | |
| Right rear initiator | 15 | 3 | Right side of floor | | |
| Right rear side marker light | 3 | 2 | Behind right taillight | | |
| Right rear turn signal light | 2 | 2 | Behind right taillight | | |
| Right rear tweeter | 6 | 2 | Middle of tailgate | | * 1 |
| Right rear wheel sensor | 9 | 2 | Right side of floor | | |
| Right taillight/brake light | 1 | 3 | Behind right taillight | | |
| Subwoofer | 8 | 8 | Middle of tailgate | | * 1 |
| Subwoofer | 8 | 2 | Middle of tailgate | | * 2 |
| Trailer lighting connector | 7 | 6 | Middle of tailgate | | |
| YOP connector (back-up sensor) | 5 | 2 | Middle of tailage | | |
| C301 | 14 | 2 | Under left side of dash | Engine compartment wire harness (see page 22-26) | |
| C304 | 13 | 18 | Under left side of dash | Dashboard wire harness (see page 22-32) | |
| C305 | 12 | 12 | Under left side of dash | Dashboard wire harness (see page 22-32) | |
| C651 | 10 | 18 | Right B-pillar | Right rear door wire harness (see page 22-47) | |
| G651 | 4 | | Right quarter panel | Body ground, via rear wire harness | |

* 1: With ELS audio system
* 2: Without ELS audio system



BACK

Protected by AR



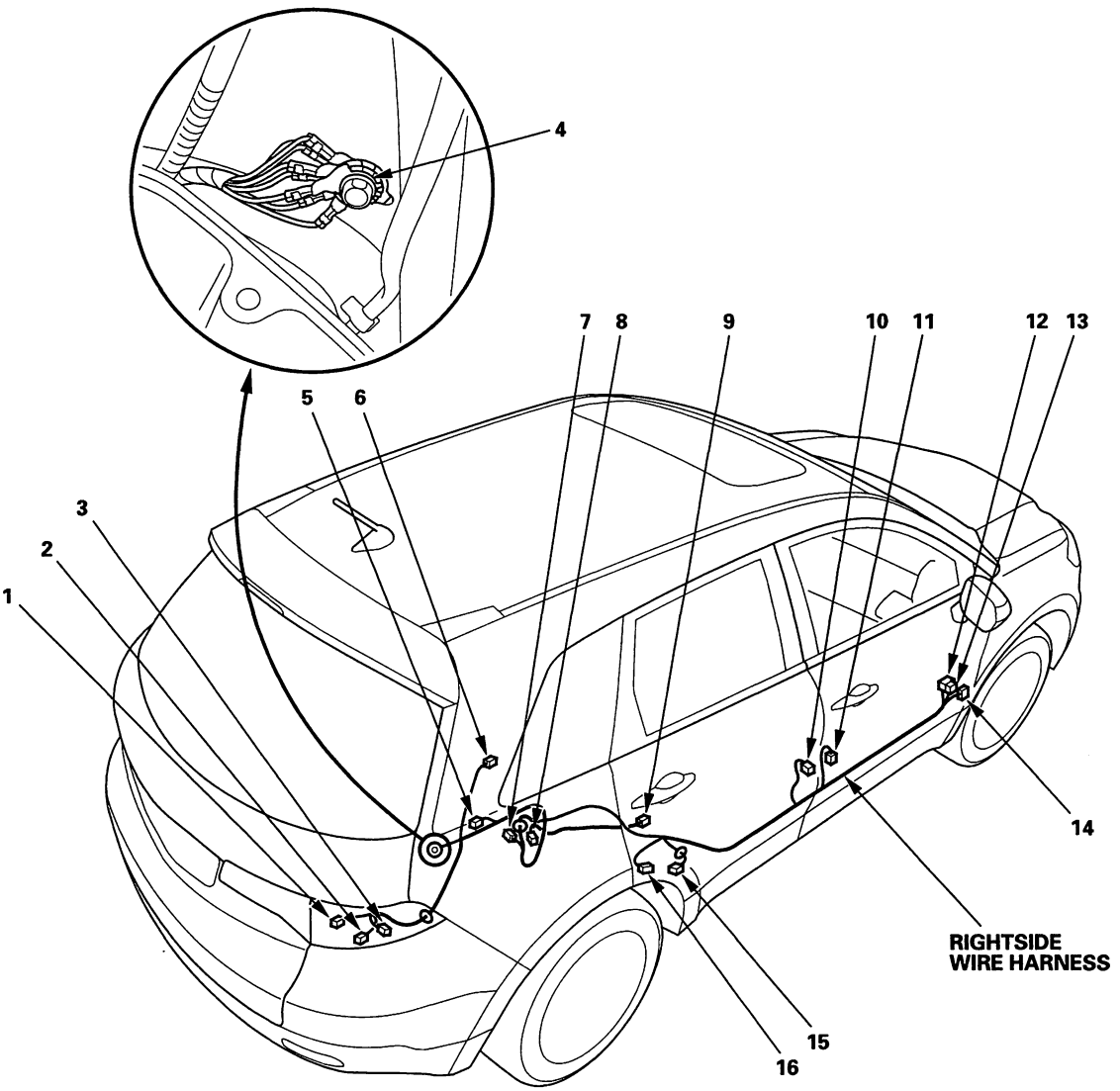

Protected by AR



## Connector to Harness Index (cont'd)

### SRS Wire Harness (Left branch)

| Connector or Terminal | Ref | Cavities | Location | Connects to | Notes |
|---|---|---|---|---|---|
| Driver's seat belt buckle tensioner | 3 | 4 | Under driver's seat | | |
| Driver's seat belt tensioner | 6 | 4 | Left B-pillar | | |
| Driver's side airbag | 1 | 2 | Under driver's seat | | |
| Left side curtain airbag | 5 | 2 | Left C-pillar | | |
| Left side impact sensor (first) | 7 | 4 | Left B-pillar | | |
| Left side impact sensor (second) | 4 | 2 | Left C-pillar | | |
| C701 | 2 | 23 | Under driver's seat | Driver's seat wire harness (see page 22-50) | |
| G551 | 8 | | Left side of floor | Body ground, via SRS wire harness | |

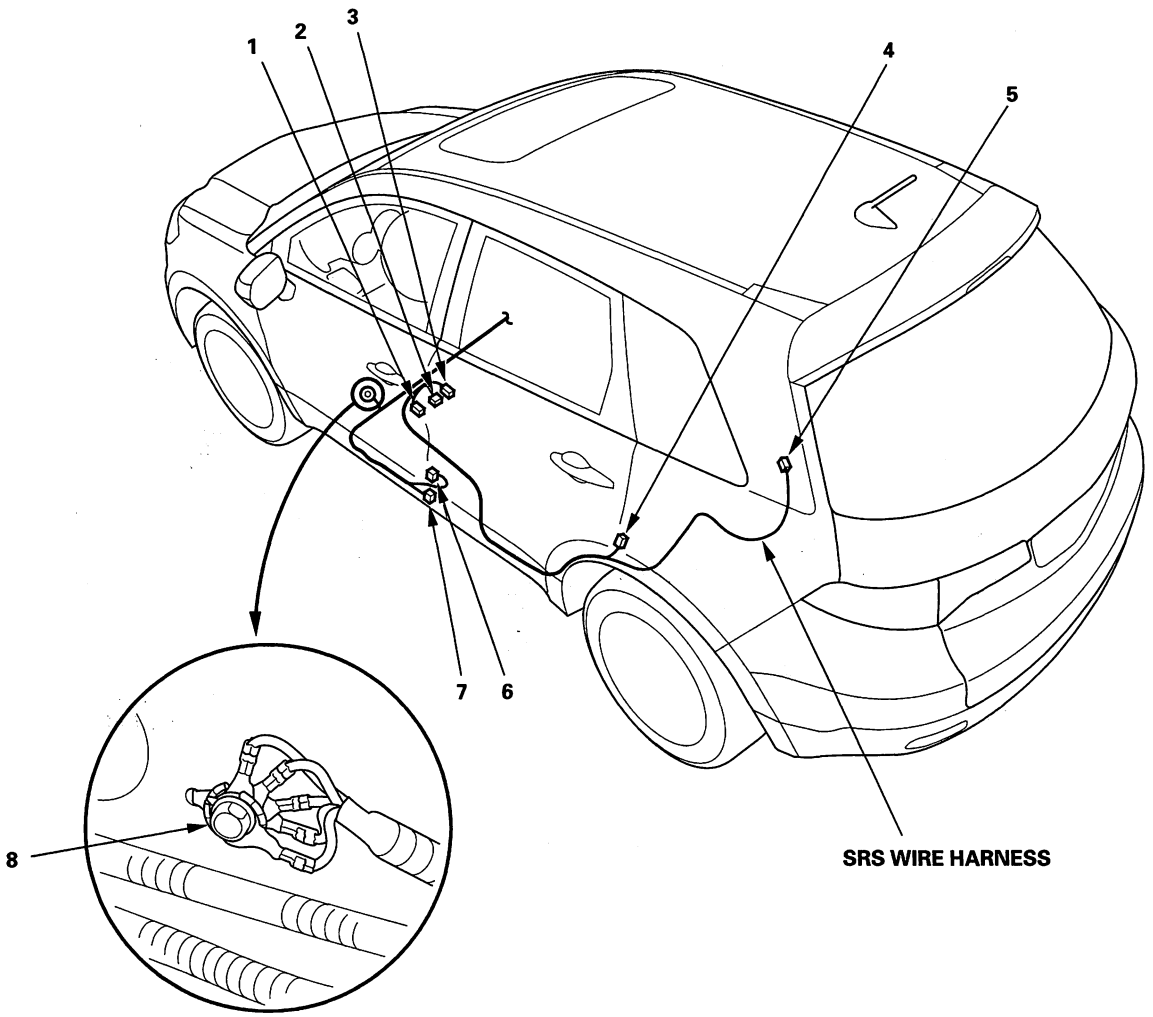




BACK

Protected by AR



### SRS Wire Harness (Right branch)

| Connector or Terminal | Ref | Cavities | Location | Connects to | Notes |
|---|---|---|---|---|---|
| Front passenger's seat belt buckle tensioner | 4 | 4 | Under front passenger's seat | | |
| Front passenger's seat belt tensioner | 10 | 4 | Right B-pillar | | |
| Front passenger's seat airbag | 7 | 2 | Under front passenger's seat | | |
| Right side curtain airbag | 12 | 2 | Right C-pillar | | |
| Right side impact sensor (first) | 9 | 4 | Right B-pillar | | |
| Right side impact sensor (second) | 11 | 2 | Right C-pillar | | |
| Roll rate sensor | 5 | 2 | Under front passenger's seat | | |
| SRS unit connector B | 2 | 28 | Under middle of dash | | |
| SRS unit connector C | 3 | 28 | Under middle of dash | | |
| C405 | 1 | 20 | Under middle of dash | Dashboard wire harness (see page 22-30) | |
| C703 | 8 | 14 | Under front passenger's seat | ODS unit harness (see page 22-51) | |
| G552 | 6 | | Right side of floor | Body ground, via SRS wire harness | |

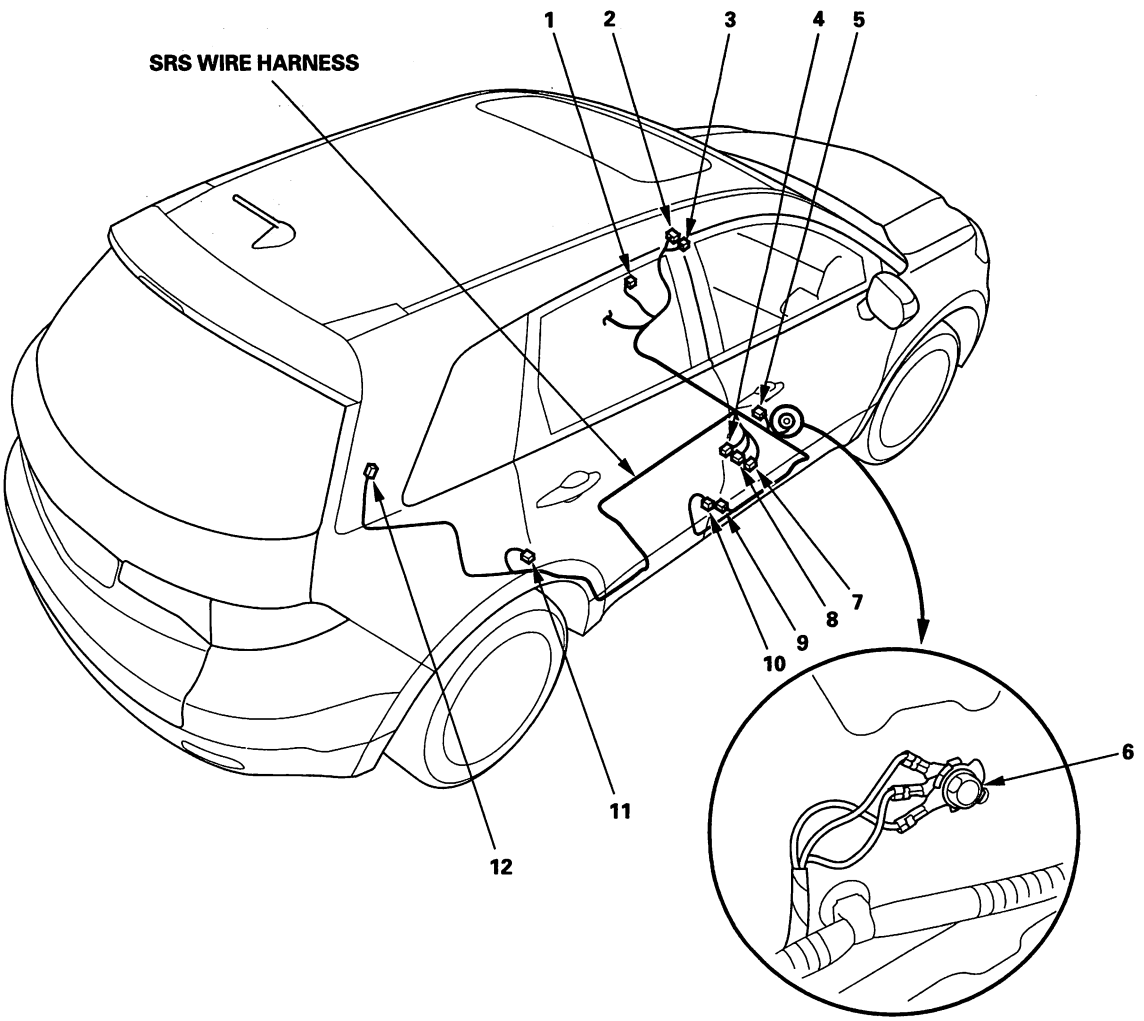

Protected by AR



## Connector to Harness Index (cont'd)

### Tailgate Wire Harness

| Connector or Terminal | Ref | Cavities | Location | Connects to | Notes |
|---|---|---|---|---|---|
| Left back-up light | 15 | 2 | Left of tailgate | | |
| Left license plate light | 12 | 2 | Left of tailgate | | |
| Left inner taillight | 16 | 2 | Left of tailgate | | |
| Rear window defogger connector (+) | 5 | 1 | Right to tailgate | | |
| Rear window wiper motor | 10 | 4 | Middle of tailgate | | |
| Rearview camera | 8 | 6 | Right to tailgate | | * |
| Right back-up light | 7 | 2 | Right to tailgate | | |
| Right license plate light | 9 | 2 | Middle of tailgate | | |
| Right inner taillight | 6 | 2 | Right to tailgate | | |
| Tailgate latch switch | 14 | 2 | Middle of tailgate | | |
| Tailgate release actuator | 13 | 2 | Middle of tailgate | | |
| Tailgate outer handle switch | 11 | 3 | Middle of tailgate | | |
| C803 | 18 | 20 | Left of tailgate | Tailgate subharness | |
| C804 | 17 | 1 | Left of tailgate | Tailgate subharness | |

*: With navigation

### Tailgate Subharness

| Connector or Terminal | Ref | Cavities | Location | Connects to | Notes |
|---|---|---|---|---|---|
| High mount brake light | 4 | 2 | Behind high mount brake light | | |
| Rear window defogger connector (−) | 1 | 1 | Left of tailgate | | |
| C801 | 2 | 20 | Rear of roof | Left side wire harness (see page 22-34) | |
| C802 | 3 | 2 | Rear of roof | Left side wire harness (see page 22-34) | |
| C803 | 18 | 20 | Left of tailgate | Tailgate wire harness | |
| C804 | 17 | 1 | Left of tailgate | Tailgate wire harness | |



BACK

Protected by AR



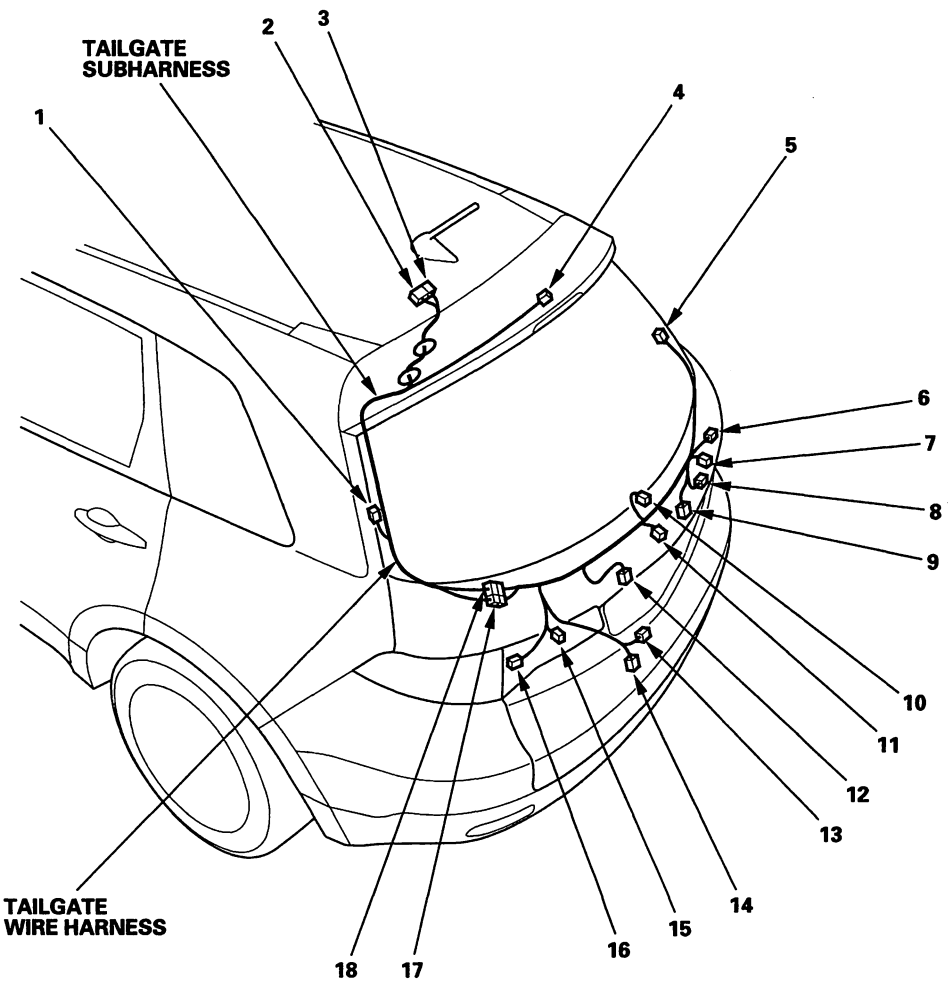

Protected by AR



## Connector to Harness Index (cont'd)

### Moonroof Wire Harness

| Connector or Terminal | Ref | Cavities | Location | Connects to | Notes |
|---|---|---|---|---|---|
| Ceiling light | 3 | 3 | Middle of roof | | |
| Left vanity mirror light | 4 | 2 | Left side of roof | | |
| Moonroof control unit | 2 | 14 | Middle of roof | | |
| Moonroof switch | 5 | 7 | Middle of roof | | |
| Right vanity mirror light | 1 | 2 | Right side of roof | | |
| Roof console | 6 | 20 | Middle of roof | | |
| C210 | 7 | 20 | Under left side of dash | Dashboard wire harness (see page 22-28) | |

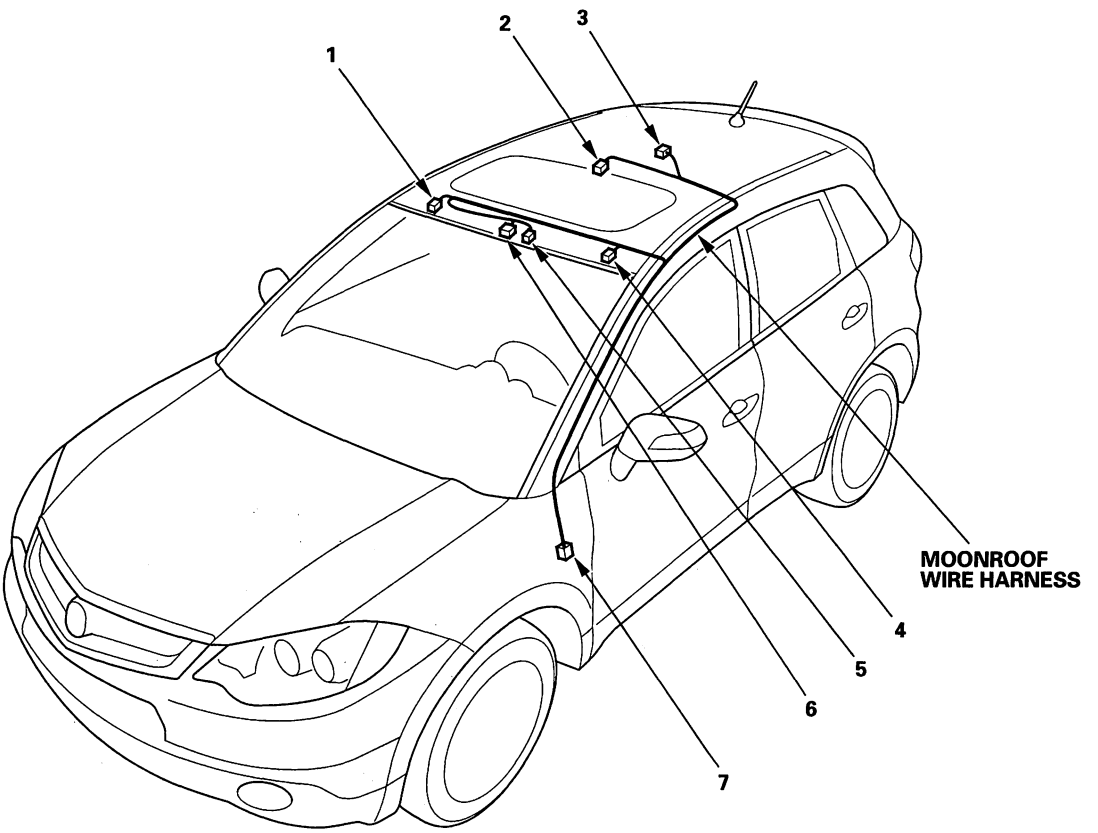




BACK

Protected by AR



### Rear Differential Subharness

| Connector or Terminal | Ref | Cavities | Location | Connects to | Notes |
|---|---|---|---|---|---|
| Differential temperature sensor | 5 | 2 | Rear differential | | |
| Left clutch electromagnetic coil | 2 | 4 | Rear differential | | |
| Right clutch electromagnetic coil | 4 | 4 | Rear differential | | |
| C751 | 6 | 6 | Rear differential | Left side wire harness (see page 22-34) | |
| C752 | 1 | 6 | Rear differential | Left side wire harness (see page 22-34) | |
| T15 | 3 | | Rear differential | | |

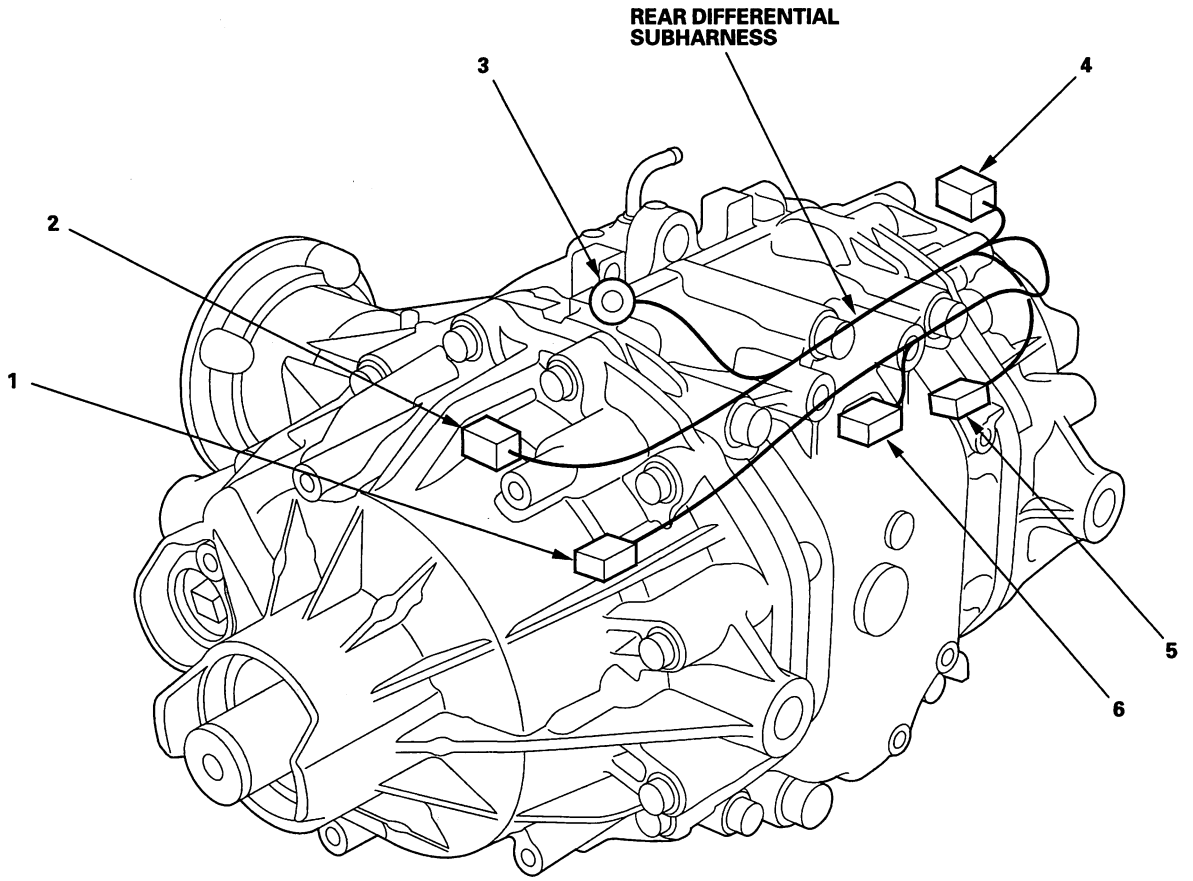

Protected by AR



## Connector to Harness Index (cont'd)

### Driver's Door Wire Harness

| Connector or Terminal | Ref | Cavities | Location | Connects to | Notes |
|---|---|---|---|---|---|
| Driver's power window motor | 10 | 6 | Driver's door | | |
| Driver's door lock actuator | 1 | 10 | Driver's door | | |
| Left front speaker | 8 | 2 | Driver's door | | |
| Left power mirror | 4 | 8 | Driver's door | | |
| Left front tweeter | 5 | 2 | Driver's door | | |
| C501 | 6 | 18 | Under left side of dash | Dashboard wire harness (see page 22-28) | |
| C502 | 7 | 16 | Under left side of dash | Dashboard wire harness (see page 22-28) | |
| C503 | 3 | 23 | Driver's door | Driver's door subharness | |

### Driver's Door Subharness

| Connector or Terminal | Ref | Cavities | Location | Connects to | Notes |
|---|---|---|---|---|---|
| Driver's door courtesy light | 9 | 2 | Driver's door | | |
| Power window master switch | 2 | 22 | Driver's door | | |
| C503 | 3 | 23 | Driver's door | Driver's door wire harness | |

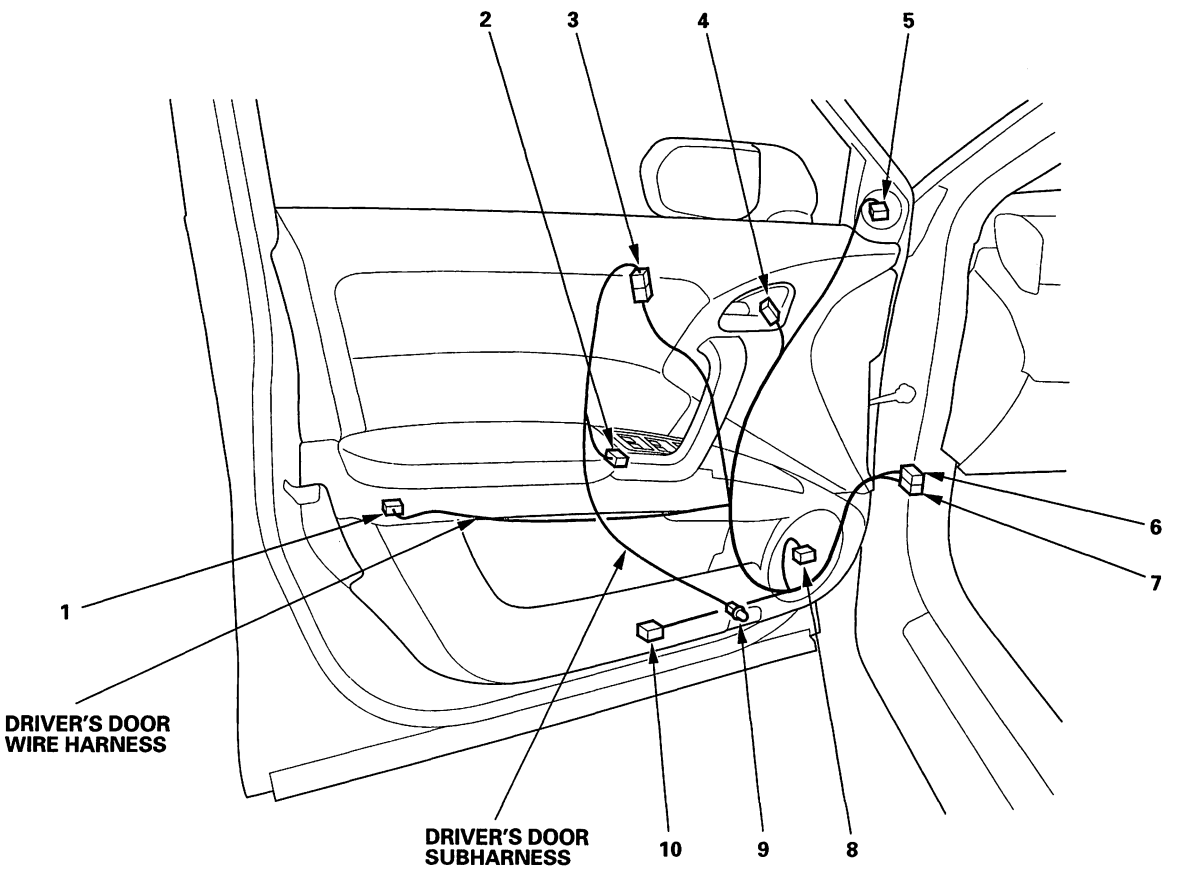




BACK

Protected by AR



### Front Passenger's Door Wire Harness

| Connector or Terminal | Ref | Cavities | Location | Connects to | Notes |
|---|---|---|---|---|---|
| Front passenger's door lock actuator | 7 | 10 | Front passenger's door | | |
| Front passenger's power window motor | 8 | 6 | Front passenger's door | | |
| Right front speaker | 10 | 2 | Front passenger's door | | |
| Right power mirror | 4 | 14 | Front passenger's door | | |
| Right front tweeter | 3 | 2 | Front passenger's door | | |
| C551 | 2 | 18 | Under right side of dash | Dashboard wire harness (see page 22-32) | |
| C552 | 1 | 8 | Under right side of dash | Dashboard wire harness (see page 22-32) | |
| C553 | 5 | 14 | Front passenger's door | Front passenger's door subharness | |

### Front Passenger's Door Subharness

| Connector or Terminal | Ref | Cavities | Location | Connects to | Notes |
|---|---|---|---|---|---|
| Front passenger's door courtesy light | 9 | 2 | Front passenger's door | | |
| Front passenger's power window switch | 6 | 14 | Front passenger's door | | |
| C553 | 5 | 14 | Front passenger's door | Front passenger's door wire harness | |

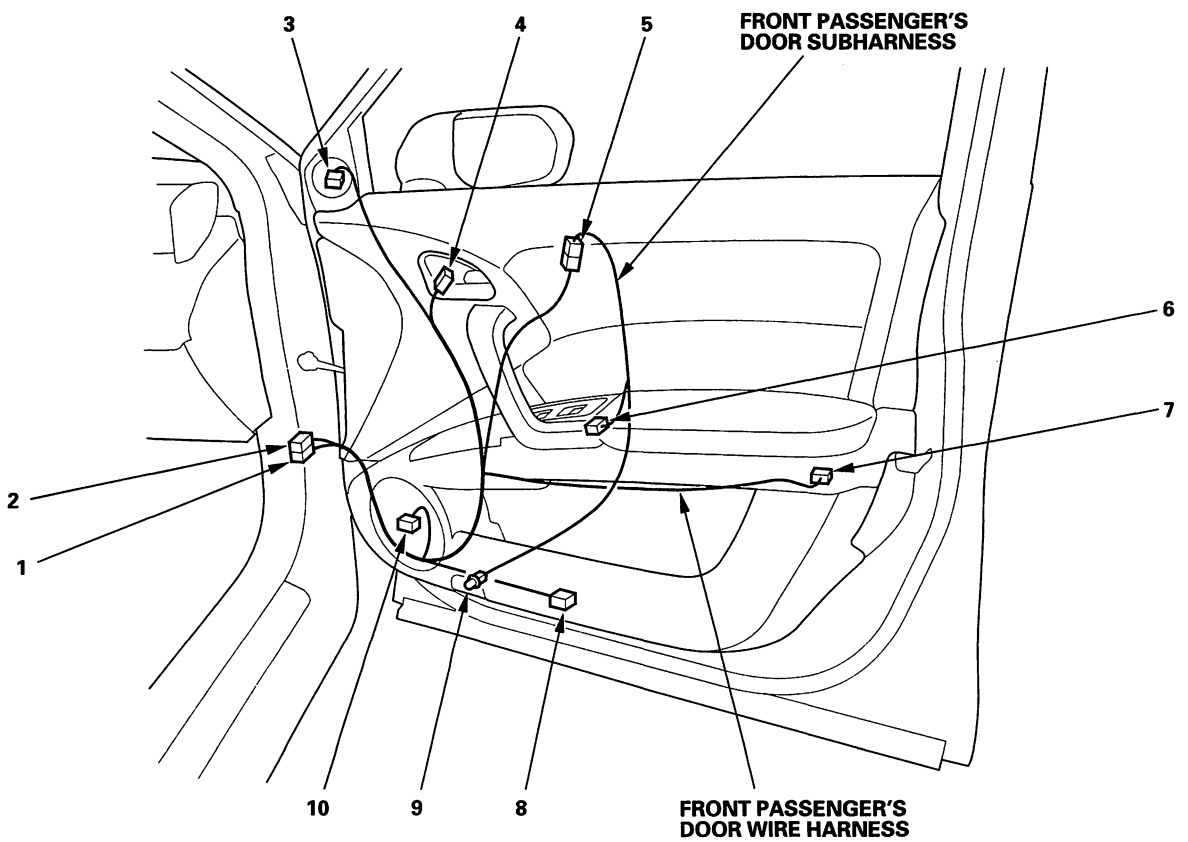

Protected by AR



## Connector to Harness Index (cont'd)

### Left Rear Door Wire Harness

| Connector or Terminal | Ref | Cavities | Location | Connects to | Notes |
|---|---|---|---|---|---|
| Left rear door lock actuator | 1 | 10 | Left rear door | | |
| Left rear speaker | 3 | 2 | Left rear door | | |
| Left rear power window motor | 5 | 2 | Left rear door | | |
| Left rear power window switch | 2 | 14 | Left rear door | | |
| C601 | 4 | 18 | Left rear door | Left side wire harness (see page 22-34) | |

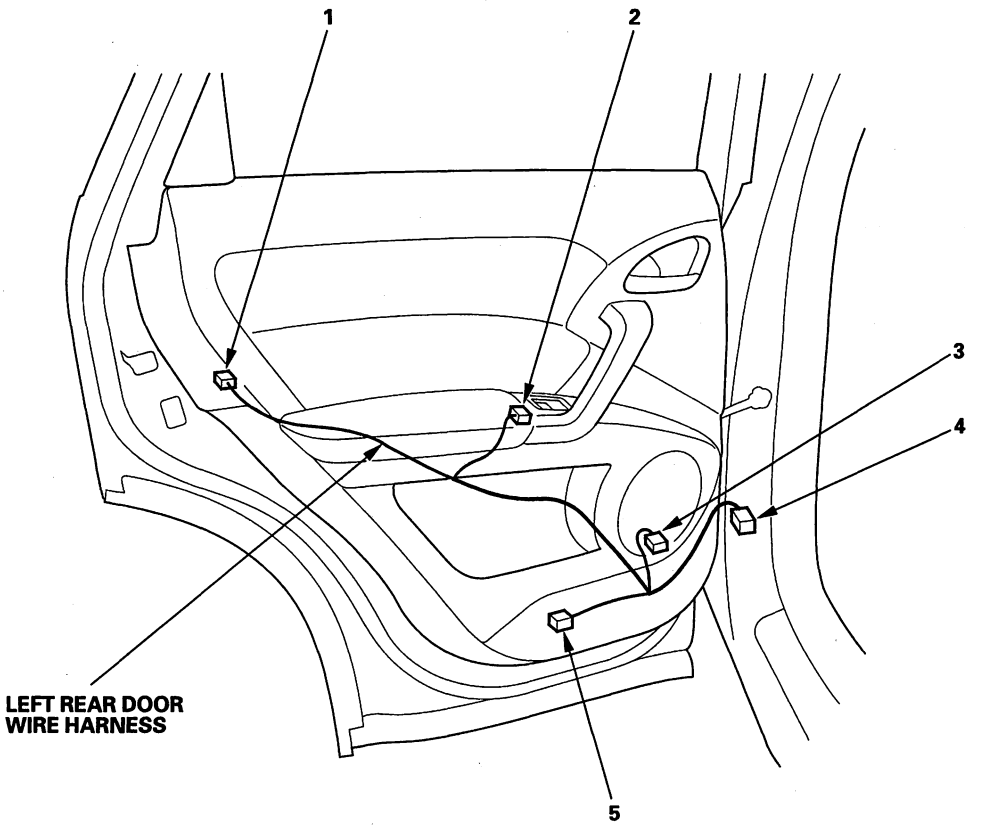




BACK

Protected by AR



### Right Rear Door Wire Harness

| Connector or Terminal | Ref | Cavities | Location | Connects to | Notes |
|---|---|---|---|---|---|
| Right rear door lock actuator | 4 | 10 | Right rear door | | |
| Right rear speaker | 2 | 2 | Right rear door | | |
| Right rear power window motor | 5 | 2 | Right rear door | | |
| Right rear power window switch | 3 | 14 | Right rear door | | |
| C651 | 1 | 18 | Right rear door | Right side wire harness (see page 22-36) | |

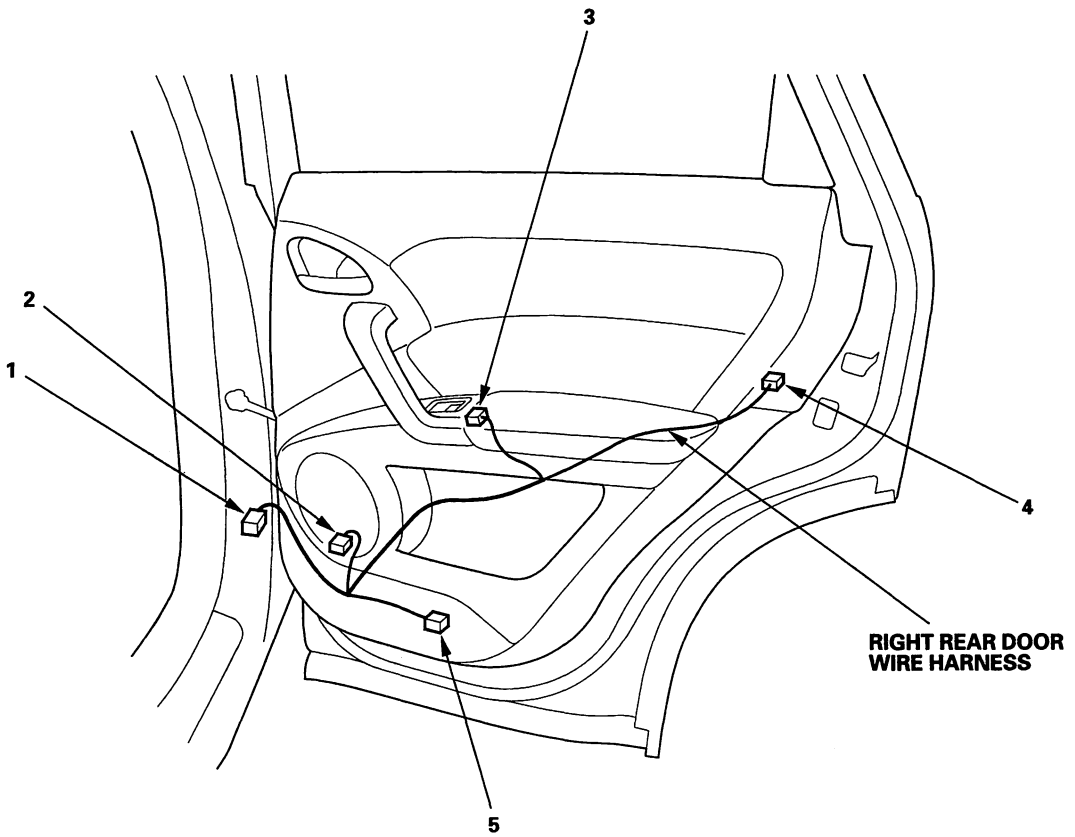

Protected by AR



## Connector to Harness Index (cont'd)

### A/C Wire Harness

| Connector or Terminal | Ref | Cavities | Location | Connects to | Notes |
|---|---|---|---|---|---|
| Blower motor | 7 | 2 | Under middle of dash | | |
| Climate control unit | 9 | 24 | Under middle of dash | | |
| Driver's air mix control motor | 1 | 7 | Under middle of dash | | |
| Evaporator temperature sensor | 4 | 2 | Under middle of dash | | |
| Mode control motor | 3 | 7 | Under middle of dash | | |
| Passenger's air mix control motor | 10 | 7 | Under middle of dash | | |
| Power transistor | 5 | 4 | Under middle of dash | | |
| Recirculation control motor | 8 | 7 | Under middle of dash | | |
| C206 | 2 | 12 | Under middle of dash | Engine compartment wire harness (see page 22-22) | |
| G571 | 8 | | Under middle of dash | | |

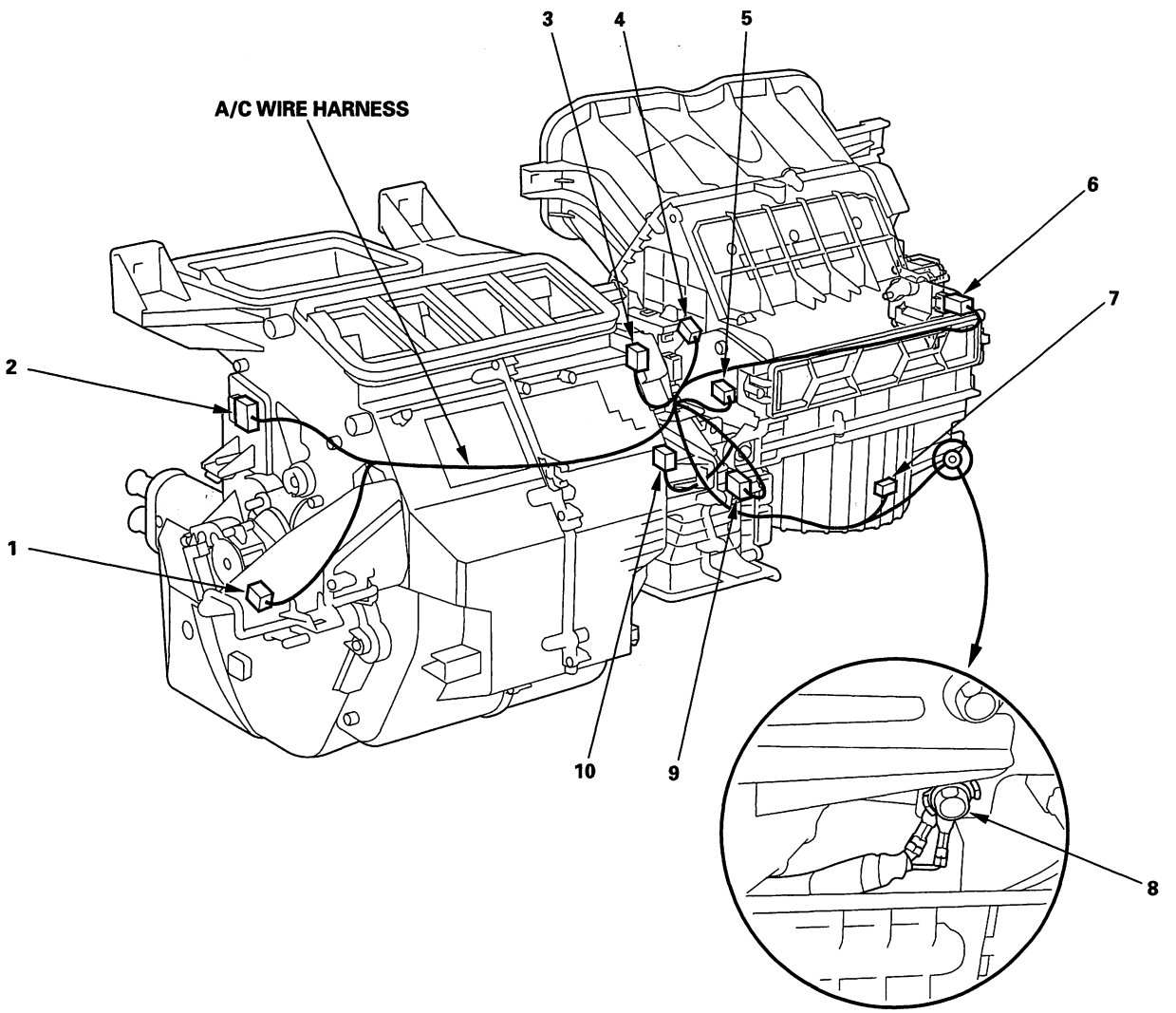




BACK

Protected by AR



### Cable Reel Subharness

| Connector or Terminal | Ref | Cavities | Location | Connects to | Notes |
|---|---|---|---|---|---|
| Audio remote switch | 1 | 12 | Steering column | | |
| Cable reel | 3 | 20 | Steering column | | |
| Cruise control combination switch | 5 | 12 | Steering column | | |
| Horn switch | 7 | 1 | Steering column | | |
| Multi-information switch | 6 | 7 | Steering column | | * |
| Steering wheel downshift switch | 2 | 2 | Steering column | | |
| Steering wheel upshift switch | 4 | 2 | Steering column | | |
| HFL-voice control switch | 8 | 7 | Steering column | | * |

*: With navigation

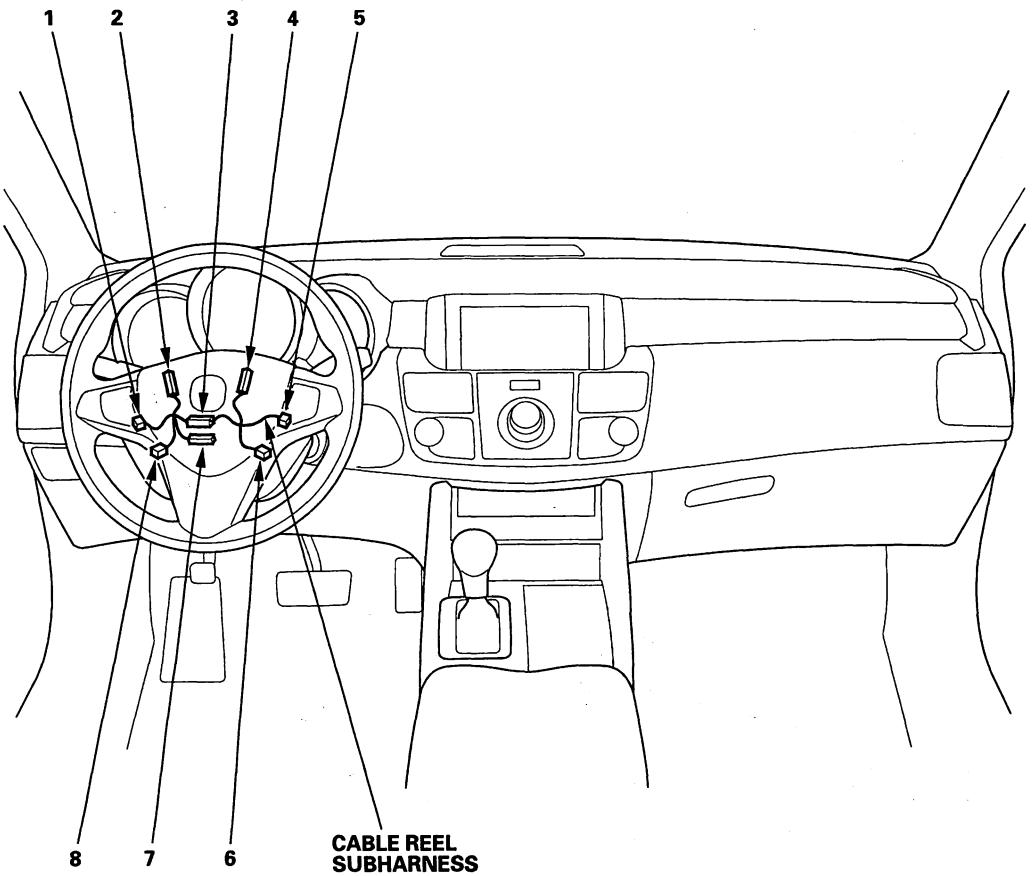

Protected by AR



## Connector to Harness Index (cont'd)

### Driver's Seat Wire Harness

| Connector or Terminal | Ref | Cavities | Location | Connects to | Notes |
|---|---|---|---|---|---|
| Driver's power seat adjustment switch | 5 | 12 | Left side of driver's seat | | |
| Driver's power seat front up-down | 11 | 2 | Driver's seat | | |
| Driver's power seat rear up-down | 3 | 2 | Under driver's seat | | |
| Driver's power seat slide motor | 6 | 2 | Under driver's seat | | |
| Driver's seat belt buckle switch | 10 | 3 | Driver's seat | | |
| Driver's seat heater cushion | 9 | 3 | Driver's seat | | |
| Driver's seat lumbar switch | 4 | 5 | Left side of driver's seat | | |
| Driver's seat position sensor | 12 | 2 | Driver's seat | | |
| C701 | 8 | 23 | Under driver's seat | SRS wire harness (see page 22-38) | |
| C702 | 7 | 6 | Under driver's seat | Driver's seat subharness | |

### Driver's Seat Subharness

| Connector or Terminal | Ref | Cavities | Location | Connects to | Notes |
|---|---|---|---|---|---|
| Driver's power lumber support motor | 13 | 2 | Driver's seat | | |
| Driver's power seat recline motor | 2 | 2 | Driver's seat | | |
| Driver's seat heater back | 1 | 2 | Driver's seat | | |
| C702 | 7 | 6 | Under driver's seat | Driver's seat wire harness | |

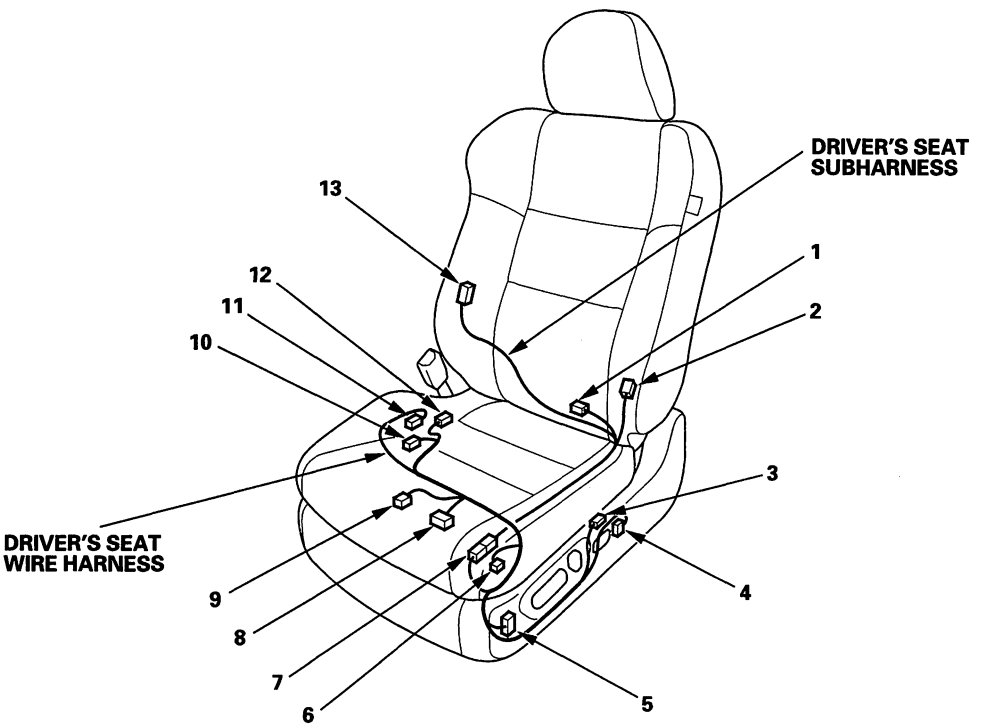




BACK

Protected by AR



## ODS Unit Harness

| Connector or Terminal | Ref | Cavities | Location | Connects to | Notes |
|---|---|---|---|---|---|
| Front passenger's seat belt buckle switch | 4 | 3 | Front passenger's seat | | |
| Front passenger's seat heater cushion | 5 | 4 | Front passenger's seat | | |
| Front passenger's weight sensor (front inner side) | 3 | 3 | Front passenger's seat | | |
| Front passenger's weight sensor (front outer side) | 7 | 3 | Front passenger's seat | | |
| Front passenger's weight sensor (rear inner side) | 2 | 3 | Front passenger's seat | | |
| Front passenger's weight sensor (rear outer side) | 8 | 3 | Front passenger's seat | | |
| ODS unit | 1 | 18 | Front passenger's seat | | |
| C703 | 6 | 14 | Front passenger's seat | SRS wire harness (see page 22-39). | |

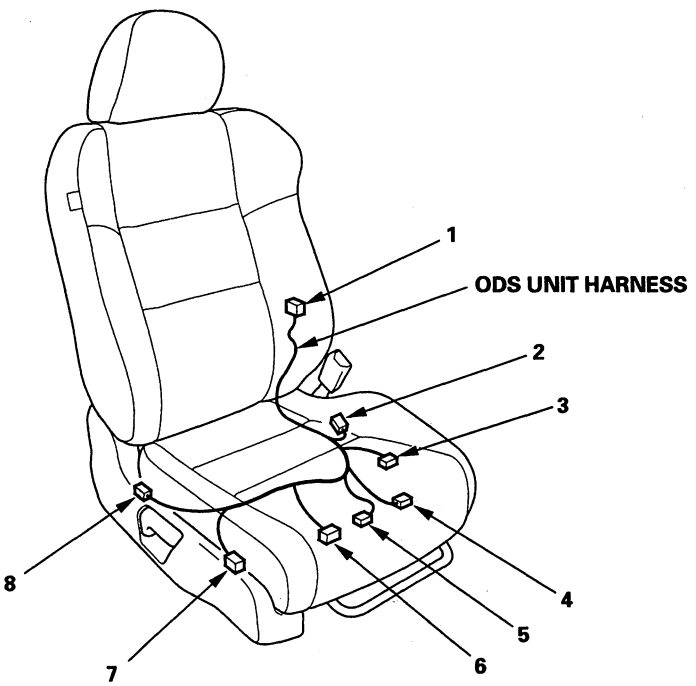

Protected by AR

# Fuse/Relay Boxes

## Connector to Fuse/Relay Box Index

### Under-hood Fuse/Relay Box

| Socket | Ref | Terminal | Connects to | Notes |
|---|---|---|---|---|
| A (ELD unit) | 21 | 3 | Engine compartment wire harness (see page 22-22) | |
| A/C compressor clutch relay | 12 | 4 | | |
| A/C condenser fan relay | 15 | 4 | | |
| B | 22 | 1 | Engine compartment wire harness (see page 22-22) | |
| Blower motor relay | 2 | 4 | | |
| C | 23 | 2 | Engine compartment wire harness (see page 22-22) | |
| D | 25 | 8 | Engine compartment wire harness (see page 22-22) | |
| Diode (for A/C condenser fan) | 9 | —— | | |
| Diode (for radiator fan) | 8 | —— | | |
| E | 24 | 10 | Engine compartment wire harness (see page 22-22) | |
| Electronic throttle control system (ETCS) control relay | 14 | 4 | | |
| F | 17 | 20 | Engine compartment wire harness (see page 22-22) | |
| Fan control relay | 4 | 5 | | |
| G | 19 | 1 | Engine compartment wire harness (see page 22-22) | |
| H | 20 | 1 | Engine compartment wire harness (see page 22-22) | |
| Ignition coil relay | 7 | 4 | | |
| J | 16 | 4 | Engine compartment wire harness (see page 22-22) | |
| K | 18 | 2 | Engine compartment wire harness (see page 22-22) | |
| PGM-FI main relay 1 (FI MAIN) | 13 | 4 | | |
| PGM-FI subrelay | 6 | 4 | | |
| Radiator fan relay | 3 | 4 | | |
| Rear window defogger relay | 1 | 4 | | |
| Rear window wiper relay | 5 | 5 | | |
| T3 | 10 | | Starter cable (see page 22-16) | |
| T101 | 11 | | Starter cable (see page 22-16) | |

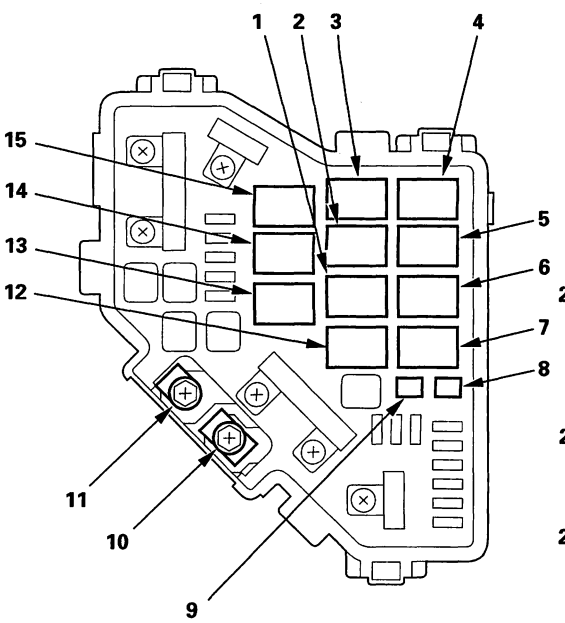


(View of front side)

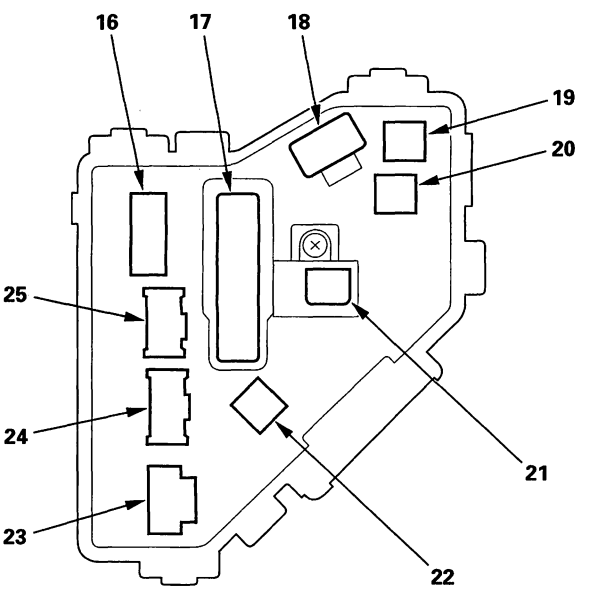


(View of back side)



BACK

Protected by AR



### Auxiliary Under-hood Fuse/Relay Box

| Socket | Ref | Terminal | Connects to | Notes |
|---|---|---|---|---|
| Power mirror defogger relay | 3 | 4 | Engine compartment wire harness (see page 22-22) | |
| Vacuum pump relay 1 | 2 | 4 | Engine compartment wire harness (see page 22-22) | |
| Vacuum pump relay 2 | 1 | 4 | Engine compartment wire harness (see page 22-22) | |

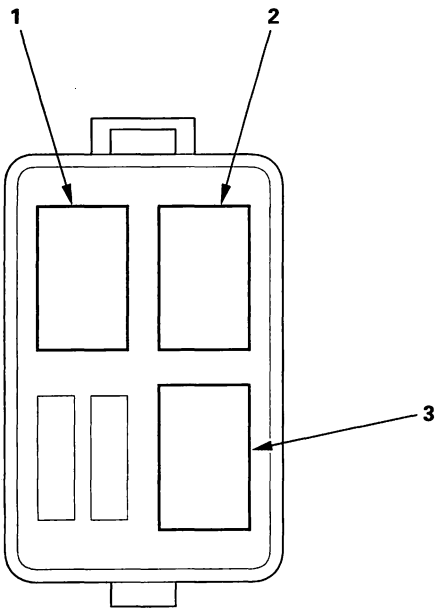

Protected by AR



## Connector to Fuse/Relay Box Index (cont'd)

### Under-dash Fuse/Relay Box

| Socket | Ref | Terminal | Connects to | Notes |
|---|---|---|---|---|
| A (Optional connector) | 9 | 6 | Not used | |
| C | 10 | 4 | Dashboard wire harness (see page 22-28) | |
| D | 4 | 2 | Dashboard wire harness (see page 22-28) | |
| E | 5 | 42 | Left side wire harness (see page 22-34) | |
| F | 6 | 34 | Engine compartment wire harness (see page 22-22) | |
| G | 7 | 21 | Engine compartment wire harness (see page 22-22) | |
| H (MICU service check connector) | 8 | 3 | | |
| K | 12 | 8 | Dashboard wire harness (see page 22-28) | |
| M | 13 | 10 | Dashboard wire harness (see page 22-28) | |
| Memory erase signal connector socket | 11 | — | | |
| N | 14 | 14 | Dashboard wire harness (see page 22-28) | |
| O | 20 | 4 | Dashboard wire harness (see page 22-28) | |
| P | 19 | 10 | Dashboard wire harness (see page 22-28) | |
| PGM-FI main relay 2 (FUEL PUMP) | 2 | 4 | | |
| Power window relay | 1 | 4 | | |
| Q | 17 | 16 | Dashboard wire harness (see page 22-28) | |
| R | 15 | 20 | Dashboard wire harness (see page 22-28) | |
| Starter cut relay | 3 | 4 | | |
| S | 16 | 20 | Dashboard wire harness (see page 22-28) | |
| T | 18 | 34 | Dashboard wire harness (see page 22-28) | |

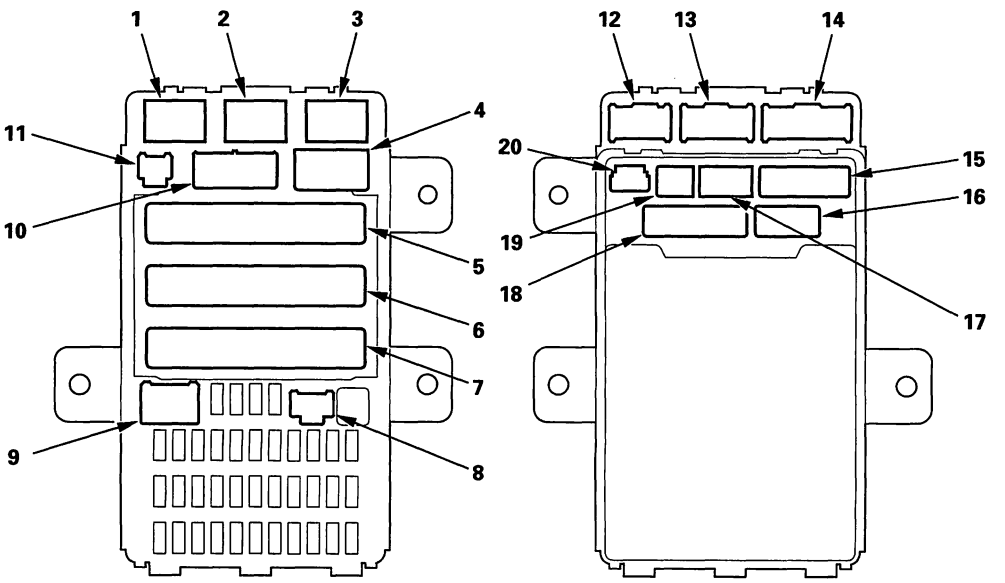


(View of front side) (View of back side)



BACK

Protected by AR



## Fuse to Components Index

### Under-hood Fuse/Relay Box

| Fuse Number | Amps | Component(s) or Circuit(s) Protected |
|---|---|---|
| 1 | 100 A (BAT) | Battery, Power distribution |
| | 30 A (SH-AWD) | SH-AWD control unit (via SH-AWD relay) |
| 2 | 50 A (IG) | Ignition switch |
| | 80 A (OPTION) | No. 5, No. 6, No. 7, No. 27, No. 28, No. 29, and No. 31 fuses (in the under-dash fuse/relay box) |
| 3 | 40 A (VSA MTR) | VSA modulator-control unit |
| | 20 A (VSA FSR) | VSA modulator-control unit |
| 4 | 50 A (H/L) | No. 18, No. 19, No. 20, and No. 21 fuses (in the under-dash fuse/relay box) |
| | 40 A (P/W) | No. 24, No. 25, No. 26, No. 30, No. 32, and No. 33 fuses (in the under-dash fuse/relay box) |
| 5 | ——— | Not used |
| 6 | 30 A | Radiator fan motor (via radiator fan relay) |
| 7 | 30 A | A/C condenser fan motor (via A/C condenser fan relay) |
| 8 | 30 A | Rear window defogger (via rear window defogger relay) |
| 9 | 40 A | Blower motor (via blower motor relay) |
| 10 | 15 A | MICU (turn signal/hazard flasher circuit) |
| 11 | 15 A | PGM-FI subrelay, EVAP canister purge valve (via PGM-FI subrelay), EVAP canister vent shut valve (via PGM-FI subrelay), A/F sensor (Sensor 1) (via PGM-FI subrelay), No. 15 fuse (in the under-hood fuse/relay box) (via PGM-FI subrelay) |
| 12 | 15 A | Brake lights, Horns (via MICU) |
| 13 | 20 A | Rear up-down motor (via driver's power seat adjustment switch), Recline motor (via driver's power seat adjustment switch) |
| 14 | 20 A | Front up-down motor (via driver's power seat adjustment switch), Slide motor (via driver's power seat adjustment switch) |
| 15 | 7.5 A | Radiator fan relay (via A/C diode B) |
| 16 | ——— | Not used |
| 17 | 15 A | Electric vacuum pump (via electric vacuum pump relays) |
| 18 | 15 A | Ignition coil relay, Ignition coils (via ignition coil relay) |
| 19 | 15 A | CKP sensor (via PGM-FI main relay 1), CMP sensor B (via PGM-FI main relay 1), PCM (via PGM-FI main relay 1), ETCS control relay (via PGM-FI main relay 1), Injectors (via PGM-FI main relay 1), PGM-FI main relay 1 (FI MAIN), PGM-FI main relay 2 (FUEL PUMP) (via PGM-FI main relay 1), Data link connector |
| 20 | 7.5 A | A/C compressor clutch (via A/C compressor clutch relay) |
| 21 | 15 A | PCM (via ETCS control relay) |
| 22 | 7.5 A | Power mirror control unit, Front individual map lights, Ceiling light, Vanity mirror lights, Door courtesy lights, Ignition key light |
| 23 | 10 A | Gauge control module, Navigation unit (with navigation), Navigation display unit (with navigation), AcuraLink control unit (USA models with navigation), Audio unit, MICU, HandsFreeLink control unit (with navigation) |

(cont'd)

Protected by AR



## Fuse to Components Index (cont'd)

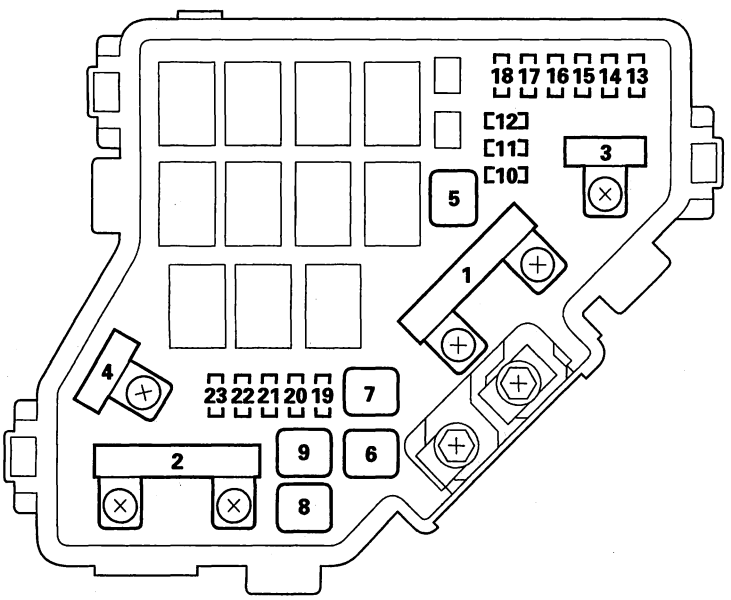




BACK

Protected by AR



### Auxiliary Under-hood Fuse/Relay Box

| Fuse Number | Amps | Component(s) or Circuit(s) Protected |
|---|---|---|
| 31 | 7.5 A | Electric vaccum pump (via electric vacuum pump relay 2) |
| 32 | —— | Not used |

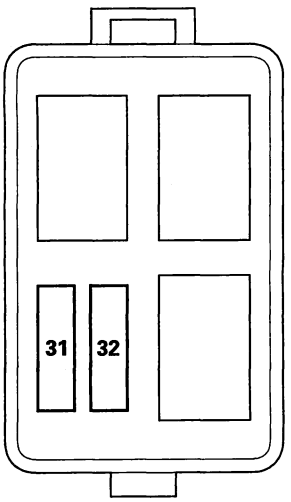


(cont'd)

Protected by AR

# Power Distribution

## Fuse to Components Index (cont'd)

### Under-dash Fuse/Relay Box

| Fuse Number | Amps | Component(s) or Circuit(s) Protected |
|---|---|---|
| 1 | 7.5 A | Power mirror control unit, Power window master switch, Moonroof control unit, SH-AWD control unit |
| 2 | 20 A | PCM, Fuel pump control module (via PGM-FI main relay 2), Immobilizer-keyless control unit |
| 3 | 15 A | Turbocharger boost control solenoid valve, Turbocharger wastegate control solenoid valve, Turbocharger bypass control solenoid valve, ELD unit, Secondary HO2S (SENSOR 2), Alternator, CMP sensor A |
| 4 | 7.5 A | VSA modulator-control unit, Yaw rate-lateral acceleration sensor, Steering angle sensor |
| 5 | 15 A | Seat heaters (via seat heater relays) |
| 6 | 20 A | Fog light relay, fog lights (via fog light relay) |
| 7 | 7.5 A | Lumber support motor (via lumber support switch) |
| 8 | 10 A | Rear window wiper motor (via rear window wiper relay), Rear window wiper relay |
| 9 | 7.5 A | SRS unit, ODS unit, Passenger's airbag CUTOFF indicator |
| 10 | 7.5 A | TPMS control unit, Gauge control module, AcuraLink control unit (USA models with navigation), Shift lock solenoid, MICU |
| 11 | 10 A | SRS unit |
| 12 | 10 A | Right headlight (high beam) |
| 13 | 10 A | Left headlight (high beam) |
| 14 | 7.5 A | Audio unit light, Audio switch panel (without navigation), Cargo area light, Glove box light, Console box light, A/T gear position console light, Interior light switch light, Ambient light, Hazard warning switch light, Climate control switches, Power mirror switch light, Passengers' airbag CUTOFF indicator light, Navigation switch panel (with navigation), Navigation unit (with navigation), Navigation display unit (with navigation), Seat heater switch lights, VSA OFF switch light, Multi information switch light, Moonroof switch light, HFL-voice control switch (with navigation), Audio remote switch, Cruise control combination switch light |
| 15 | 15 A | Parking lights, Taillights, License plate lights, Side marker lights, Inner taillights |
| 16 | 15 A | Right headlight (low beam) |
| 17 | 15 A | Left headlight (low beam) |
| 18 | 20 A | No.12 and No. 13 fuses (in the under-dash fuse/relay box) (via MICU) |
| 19 | 20 A | No. 15 fuse (in the under-dash fuse/relay box) (via MICU) |
| 20 | 7.5 A | TPMS control unit |
| 21 | 30 A | No. 16 and No. 17 fuses (in the under-dash fuse/relay box) (via MICU) |
| 22 | — | Not used |
| 23 | — | Not used |
| 24 | 20 A | Moonroof control unit/motor |
| 25 | 20 A | Door lock actuators (via door lock circuit in the MICU) |
| 26 | 20 A | Driver's power window motor (via power window master switch) |
| 27 | — | Not used |
| 28 | 15 A | Console accessory power socket (via console accessory power socket relay) |
| 29 | 15 A | Front accessory power socket (via front accessory power socket relay) |
| 30 | 20 A | Front passenger's power window motor (via front passenger's power window switch) |
| 31 | 20 A | Stereo amplifier, Subwoofer (with navigation) |
| 32 | 20 A | Right rear power window motor (via right rear power window switch) |
| 33 | 20 A | Left rear power window motor (via left rear power window switch) |
| 34 | — | Not used |
| 35 | 7.5 A | AcuraLink control unit (USA models with navigation), HFL-voice control unit (with navigation), Front accessory power socket relay, Console accessory power socket relay, Audio unit, Navigation display unit (with navigation), Navigation unit (with navigation), Key interlock solenoid |
| 36 | 10 A | Seat heaters relays (via seat heater switches), Blower motor relay, A/C compressor clutch relay, A/C condenser fan relay (via A/C diode A), Fan control relay (via A/C diode A), Climate control switches, Climate control unit, Recirculation control motor, Left mirror (via power mirror switch) |
| 37 | 7.5 A | MICU (daytime running lights power supply) |
| 38 | 30 A | Windshield wiper motor (via wiper circuit in the MICU), Windshield/rear window washer motor (via wiper circuit in the MICU) |



BACK

Protected by AR



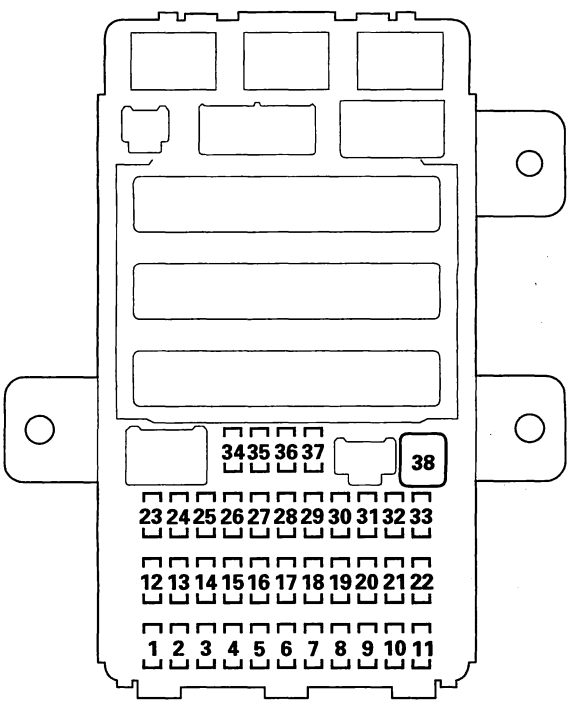


BACK

Protected by AR

# Ground Distribution

## Ground to Components Index

| Ground | Component or Circuit Grounded |
|---|---|
| G1 | Battery |
| G2 | Engine |
| G3 | Transmission housing |
| G101 | PCM (PG and LG2 is BLK; LG1 is BRN/YEL)<br>BLK: A/T clutch pressure control solenoid valves A, B, C, Ignition coils, Rocker arm oil control solenoid, Transmission range switch, VTC oil control solenoid valve<br>BRN/YEL: CKP sensor, CMP sensor B, Data link connector (DLC), Immobilizer-keyless control unit, Rocker arm oil pressure switch, Shielding between the PCM and these components have BRN/YEL wires: Knock sensor (KS), Secondary HO2S (Sensor 2) |
| G201 | Electric vacuum pump relay 1, 2, Left fog light, Left front side marker/parking/turn signal lights, Left headlights (high/low beam), Radiator fan motor |
| G202 | Blower motor relay, ELD unit, Fan control relay |
| G301 | Right headlights (high/low beam), Right fog light, Right front side marker/parking /turn signal lights |
| G401 | Electric vacuum pump, PSP switch, Washer fluid level switch (Canada models) |
| G402 | VSA modulator-control unit (2 wires) |
| G451 | Brake fluid level switch, Hood switch, Keyless buzzer, MICU (PG), Windshield wiper motor |
| G501 | BLK wire: Data link connector (DLC), Driver's door lock switch, Front individual map light, Gauge control module (2 wires), Left mirror defogger, MICU (SG), Moonroof control unit/motor, Moonroof switch, Power mirror control unit, Power mirror switch, Power window master switch, Vanity mirror lights (driver's and front passenger's), VSA OFF switch<br>BRN wire: Driver's door lock knob switch, Driver's door key cylinder switch, Driver's power window motor, Left side turn signal light |
| G502 | Accessory power socket relays (front and console), Audio switch panel (with premium audio system), Audio-HVAC subdisplay unit, Cruise control combination switch, Driver's climate control switch, Driver's seat heater relay (high), Driver's seat heater relay (low) (2 wires), Front passenger's seat heater relay (high), Ignition key switch, Interface dial, Steering angle sensor, Navigation display unit, Navigation switch panel, Steering wheel shift switches |
| G503 | Accessory power socket (front and console), Console box light, Front passenger's seat heater relay (low) (2 wires), HandsFreeLink control unit (with navigation), Navigation unit (with navigation), Park pin switch, Seat heater switch (driver's and front passenger's), Stereo amplifier, TPMS control unit, Yaw rate-lateral acceleration sensor |
| G504 | Audio unit (2 wires), Stereo amplifier |
| G505 | AcuraLink control unit (USA models with navigation), AcuraLink tester connector ground (USA models with navigation), Front passenger's door lock knob switch, Front passenger's door lock switch, Front passenger's power window motor, Front passenger's power window switch, Glove box light, Right mirror defogger, Right side turn signal light |
| G506 | Memory erase signal (MES) connector, SRS unit (2 wires) |
| G551 | Driver's seat belt buckle switch, Driver's power seat adjustment switch (2 wires), Driver's seat heater, Lumber support switch (2 wires) |
| G552 | Front pasenger's seat belt buckle switch, Front passenger's seat heater, ODS unit |
| G571 | Climate control unit, Power transistor |
| G601 | Fuel pump control module, Left rear door lock knob switch, Left rear power window switch, MICU (PG and SG) (2 wires), SH-AWD control unit (3 wires), SH-AWD relay |
| G602 | Back-up lights, High mount brake light, Left rear side marker light, Left rear turn signal light, Left taillight/brake light, License plate lights, Inner taillights, Rear differential, Rear window defogger, Rear wiper motor |
| G651 | Right rear door lock knob switch, Right rear side marker light, Right rear turn signal light, Right rear power window switch, Right taillight/brake light, Subwoofer (with ELS audio system), Trailer lighting connector |



BACK

Protected by AR



# Under-hood Fuse/Relay Box

## Removal and Installation

### Removal

1. Make sure you have the anti-theft code for the audio system and the navigation system (if equipped), then write down the audio presets.
2. Make sure the ignition switch is OFF.
3. Disconnect the negative battery cable, then disconnect the positive cable, and wait at least 3 minutes.
4. Remove the screws (A) for the alternator and battery cable terminals from the under-hood fuse/relay box.

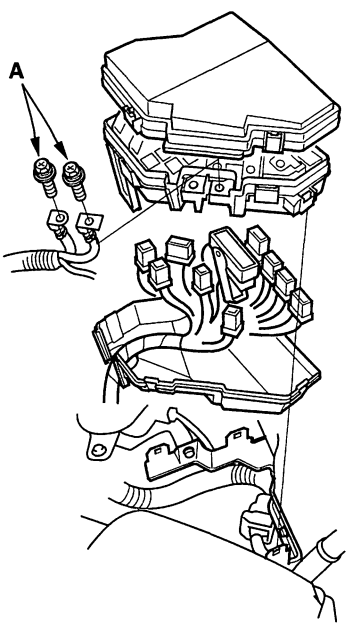


5. Remove the bottom cover from the under-hood fuse/relay box.
6. Disconnect the connectors from the under-hood fuse/relay box.
7. Carefully remove the relays by prying under the base of the relay.

   NOTE: Do not use pliers. Pliers will damage the relays, which could cause the engine to stall or not start.

### Installation

1. Install the relays and connect the connectors to the under-hood fuse/relay box, then install the under-hood fuse/relay box in the reverse order of removal.
2. Install the removed parts in the reverse order of removal.
3. Connect the positive cable to the battery, then connect the negative cable to the battery.
4. Enter the anti-theft code for the audio system and the navigation system (if equipped), then enter the audio presets.
5. Confirm that all systems work properly.
6. Set the clock.

Protected by AR

# Under-dash Fuse/Relay Box

## Removal and Installation

SRS components are located in this area. Review the SRS component locations (see page 24-12) and precautions and procedures (see page 24-14) before performing repairs or servicing.

### Removal

1. Make sure you have the anti-theft code for the audio system and the navigation system (if equipped), then write down the audio presets.

2. Make sure the ignition switch is OFF.

3. Disconnect the negative battery cable, then disconnect the positive cable, and wait at least 3 minutes.

4. Remove the driver's dashboard undercover (see page 20-102).

5. Disconnect the connectors from the fuse side of the under-dash fuse/relay box (A).

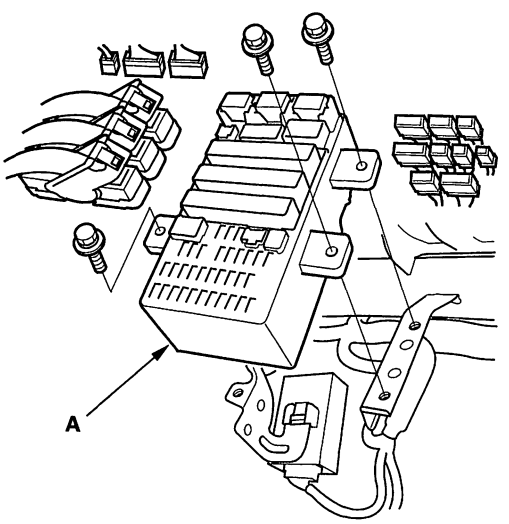


6. Remove the mounting bolt, and pull the fuse/relay box away from the body.

7. Disconnect the connectors from the back side of the under-dash fuse/relay box, then remove the under-dash fuse/relay box.

8. Carefully remove the relays by prying under the base of the relay.

   NOTE: Do not use pliers. Pliers will damage the relays, which could cause the engine to stall or not start.

### Installation

1. Install the relays and connect the connectors to the under-dash fuse/relay box, then install the under-dash fuse/relay box in the reverse order of removal.

2. Install the removed parts in the reverse order of removal.

3. Connect the positive cable to the battery, then connect the negative cable to the battery.

4. Register the immobilizer system with the HDS (see page 22-341).

   NOTE: The IMOES unit is built into the MICU which is part of the under-dash fuse/relay box. Because of this construction, the IMOES must be registered, or the vehicle will not start.

5. Enter the anti-theft code for the audio system and the navigation system (if equipped), then enter the audio presets.

6. Confirm that all systems work properly.

7. Set the clock.



BACK

Protected by AR



## Battery Test

**⚠ WARNING**

A battery can explode if you do not follow the proper procedure, causing serious injury to anyone nearby. Follow all procedures carefully and keep sparks and open flames away from the battery.

Use an ED-18™ Battery Tester, and follow the manufacturer's procedures. If you don't have one of these computerized testers, follow this conventional test procedure:

1. Be sure the temperature of the electrolyte is between 70 °F (21 °C) and 100 °F (38 °C).

2. Inspect the battery case for cracks or leaks.

   - If the case is damaged, replace the battery. ■
   - If the case looks OK, go to step 3.

3. Check the test indicator window.

   - If the test indicator window indicates the battery is charged, go to step 4.
   - If the test indicator window indicates a low charge, go to step 7.

4. Apply a 300 amp load for 15 seconds to remove the surface charge.

5. Wait 15 seconds, then apply a test load of 280 amps for 15 seconds.

6. Record battery voltage.

   - If voltage is above 9.6 V, the battery is OK. ■
   - If voltage is below 9.6 V, go to step 7.

7. Charge the battery on High (40 amps) until the test indicator window shows the battery is charged, plus an additional 30 minutes. If the battery charge is very low, it may be necessary to bypass the charger's polarity protection circuitry.

   - If the test indicator window indicates the battery is charged within three hours, repeat steps 4 through 6. If the battery is still below 9.6 V, replace the battery. ■
   - If the test indicator window indicates the battery is not charged within three hours, replace the battery. ■

Protected by AR



## Power Relay Test

Use this chart to identify the type of relay, then do the test listed for it.

| Relay | Test |
|---|---|
| A/C compressor clutch relay | Normally-open type |
| A/C condenser fan relay | |
| Blower motor relay | |
| Driver's seat heater relay (HIGH) | |
| Electric vacuum pump relay 1, 2 | |
| Electronic throttle control system (ETCS) control relay | |
| Fog light relay | |
| Front accessory power socket relay | |
| Front passenger's seat heater relay (HIGH) | |
| Ignition coil relay | |
| PGM-FI main relay 1, 2 | |
| PGM-FI subrelay | |
| Power mirror defogger relay | |
| Power window relay | |
| Radiator fan relay | |
| Console accessory power socket relay | |
| Rear window defogger relay | |
| SH-AWD relay | |
| Starter cut relay | |
| Driver's seat heater relay (LOW) | Five-terminal type |
| Fan control relay | |
| Front passenger's seat heater relay (LOW) | |
| Rear window wiper relay | |

### Normally-open type

Check for continuity between the terminals.

- There should be continuity between the No. 1 and No. 2 terminals when battery positive terminal is connected to the No. 4 terminal, and battery negative terminal is connected to the No. 3 terminal.
- There should be no continuity between the No. 1 and No. 2 terminals when power is disconnected.

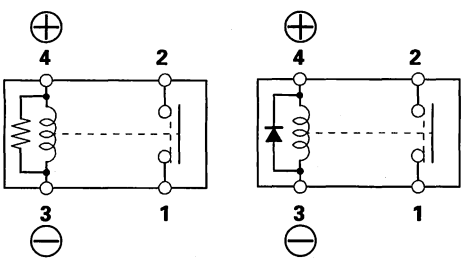


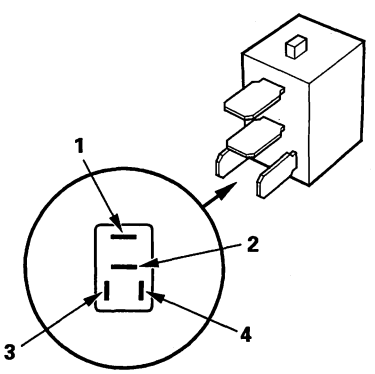




BACK

Protected by AR



### Five-terminal type

Check for continuity between the terminals.

- There should be continuity between the No. 1 and No. 2 terminals when battery positive terminal is connected to the No. 5 terminal, and battery negative terminal is connected to the No. 3 terminal.
- There should be continuity between the No. 1 and No. 4 terminals when power is disconnected.

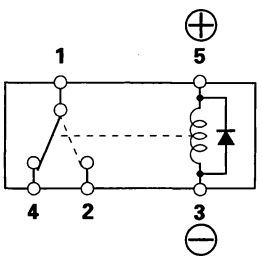


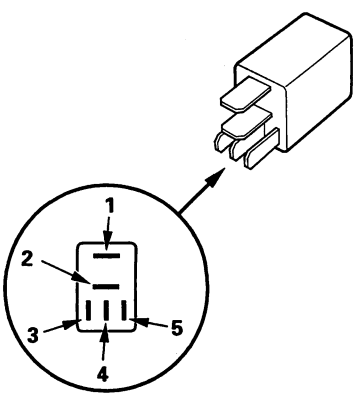

Protected by AR

# Ignition Switch

## Test

SRS components are located in the area. Review the SRS component locations (see page 24-12) and precautions and procedures (see page 24-14) before performing repairs or servicing.

1. Make sure you have the anti-theft code for the audio system and the navigation system (if equipped), then write down the audio presets.
2. Disconnect the negative battery cable.
3. Remove the steering column covers (see page 20-107).
4. Disconnect the 7P connector (A) from the ignition switch (B).

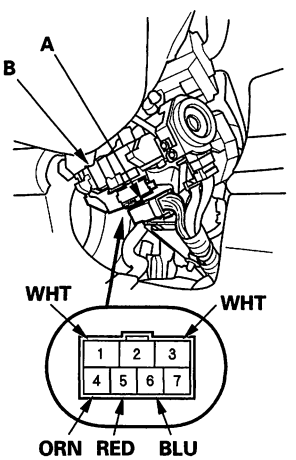


5. Check for continuity between the terminals in each switch position according to the table.

| Position \ Terminal | RED (ACC) | WHT (BAT) | BLU (IG1) | ORN (IG2) | YEL (ST) |
|---|---|---|---|---|---|
| O (LOCK) | | | | | |
| I (ACC) | ○—○ | | | | |
| II (ON) | ○—○ | ○—○ | ○—○ | ○—○ | |
| III (START) | | ○—○ | ○—○ | | ○—○ |

6. If the continuity checks do not agree with the table, replace the ignition switch (see page 22-66).
7. Enter the anti-theft code for the audio system and the navigation system (if equipped), then enter the audio presets.
8. Set the clock.

## Replacement

SRS components are located in the area. Review the SRS component locations (see page 24-12) and precautions and procedures (see page 24-14) before performing repairs or servicing.

1. Make sure you have the anti-theft code for the audio system and the navigation system (if equipped), then write down the audio presets.
2. Disconnect the negative battery cable.
3. Remove the steering column covers (see page 20-107).
4. Disconnect the 7P connector (A) from the ignition switch (B).

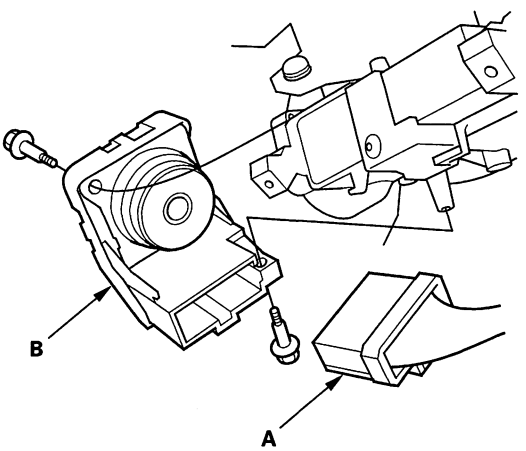


5. Remove the two screws and the ignition switch.
6. Install in the reverse order of removal.
7. Enter the anti-theft code for the audio system and the navigation system (if equipped), then enter the audio presets.
8. Set the clock.



BACK

Protected by AR



## Component Location Index

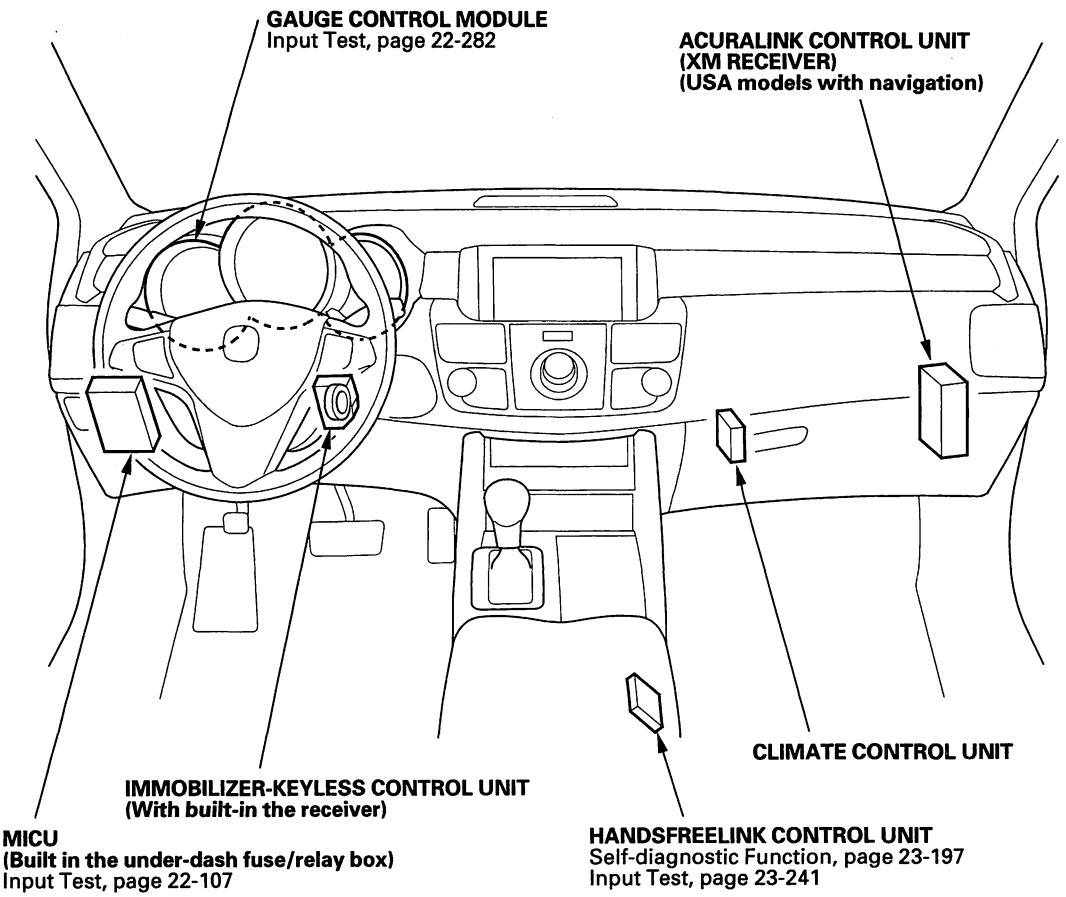

Protected by AR



## General Troubleshooting Information

### Troubleshooting CAN Circuit Related Problems

NOTE: Check the PCM for DTCs and troubleshoot PCM (see page 11-3) or F-CAN loss of communication errors first.

### Using the HDS (Preferred method)

1. Go to B-CAN System Diagnosis Test Mode A to check for "Connected units" and DTCs (see page 22-88).

2. If no DTCs are retrieved, go to B-CAN System Diagnosis Test Mode C (see page 22-91) or D (see page 22-92).

### Set the B-CAN system diagnosis Test mode 1 (see page 22-93). Without HDS (Use only if the HDS is unavailable)

1. Check for communication circuit problems using B-CAN System Diagnostic Test (see page 22-88).

2. Check for DTCs.

3. Sort, and then troubleshoot the DTCs in the order.

   -1 Battery voltage DTCs
   -2 Internal error DTCs
   -3 Loss of communication DTCs (beginning with the lowest number first; for example, if B1008 and B1011 are retrieved, troubleshoot B1008 first)
   -4 Signal error DTCs

4. If no DTCs are retrieved, use B-CAN System Diagnostic Test Mode 2 to check all inputs related to failure (see step 10 on page 22-93).



BACK

Protected by AR



## How to display DTCs on the gauge control module

Set the B-CAN System Diagnosis Test Mode 1 (see page 22-93). While in Test Mode 1, the DTCs which have been detected and stored individually by various B-CAN (Body-controller Area Network) units, will be shown one by one on the LCD display when the communication between the MICU and the gauge control module is normal. To scroll through the DTCs, press the select/reset button.

| | With navigation | Without navigation |
|---|---|---|
| DTC detected (the lower four digits is a decimal number representing the DTC) | DTC SERVICE<br>DTC B1152 PA 50 | b1152<br>50 |
| No DTCs detected | DTC SERVICE<br>DTC NO | no |
| All DTCs have been displayed | DTC SERVICE<br>DTC END | End |

The unit that has stored the code can be identified by the number shown on the multi-information display.

| Control Unit | Control Unit I.D. Number |
|---|---|
| MICU | 10 |
| Gauge control module | 50 |
| Climate control unit | 51 |
| HansFreeLink control unit | 94 |
| Immobilizer-keyless control unit | 96 |
| AcuraLink control unit (XM receiver) | 97 |

## How to clear the DTC

Set the B-CAN System Diagnosis Test Mode 1 (see page 22-93). While in Test Mode 1, press and hold down the SELECT/RESET button for more than 10 seconds.

(cont'd)

Protected by AR



## General Troubleshooting Information (cont'd)

### Loss of Communication DTC cross-reference chart

When an ECU is unable to communicate with the other ECUs on the CAN circuit, the other control units will set loss of communication DTCs. Use this chart to find the control unit that is not communicating.

1. Find the Transmitting Control Unit that is in the same row as all of the loss of communication DTCs retrieved.
2. Do the input test for the transmitting control unit.

**BUS OFF and Internal Error Codes**

| DTC type | Related Unit | | | | | |
|---|---|---|---|---|---|---|
| | MICU | Gauge Control Module | Climate Control Unit | Hands FreeLink Control Unit | Immobilizer-Keyless Control Unit | AcuraLink Control Unit (XM Receiver) |
| BUS OFF | B1000 | B1150 | B1200 | B1750 | B1900 | B2200 |
| ECU (CPU) Error | B1001 | | | | | |
| ECU (EEPROM) Error | B1002 | B1152 | | | | |
| ECU (Internal) Error | | | | B1792 | | B2209 |

| Transmitting Control Unit | Message | Receiving Unit/Loss of Communication DTC | | | | | | |
|---|---|---|---|---|---|---|---|---|
| | | MICU | Gauge Control Module | Climate Control Unit | Hands FreeLink Control Unit | Immobilizer-Keyless Control Unit | AcuraLink Control Unit (XM Receiver) | Navigation Unit |
| MICU | RM | TX | B1188 | | | | | |
| | HLSW | TX | B1155 | | | | | |
| | WIPSW | TX | B1156 | | | | | |
| | MICU | TX | B1157 | | | | | |
| | DOORSW | TX | B1159 | | | | | |
| | DRLOCK SW | TX | B1160 | | | B1905 | | |
| Gauge Control Module | VSP/NE | B1011 | TX | B1205 | | | | |
| | A/T | B1008 | TX | | | B1906 | | |
| | ENGTEMP | | TX | B1206 | | | | |
| | ILLMI | | TX | B1207 | | | | |
| | CDS (SRS) | B1032 | TX | | | | | |
| PCM | ENGTEMP | | B1168 | | | | | |
| | A/T | | B1169 | | | | | |
| VSA | VSA | | B1170 | | | | | |
| TPMS | TPMS | | B1173 | | | | | |
| SRS Unit | SRS MSG | | B1187 | | | | | |
| AcuraLink | | | | | B2208 | | | B2207 |

TX: Transmitting unit does not set a loss communication DTC.



BACK

Protected by AR



# DTC Troubleshooting Index

NOTE: Check the PCM for DTCs and troubleshoot PCM (see page 11-3) or F-CAN loss of communication errors first, then record all DTCs, and sort them by DTC type using the DTC troubleshooting index, then troubleshoot the DTC(s) in this order.

- Battery voltage DTCs
- Internal error DTCs
- Loss of communication DTCs (beginning with the lowest number first; for example, if B1008 and B1011 are retrieved, troubleshoot B1008 first).
- Signal error DTCs

**MICU**

| DTC | Description | DTC type | Page |
|---|---|---|---|
| B1000 | Communication bus line error (BUS-OFF) | Loss of communication | (see page 22-99) |
| B1001 | MICU internal error (CPU error) | Internal error | (see page 22-100) |
| B1002 | MICU internal error (EEPROM error) | Internal error | (see page 22-100) |
| B1008 | MICU lost communication with gauge control module (A/T message) | Loss of communication | (see page 22-101) |
| B1011 | MICU lost communication with gauge control module (VSP/NE message) | Loss of communication | (see page 22-101) |
| B1026 | Front passenger's door lock switch LOCK/UNLOCK signal error | Signal error | (see page 22-118) |
| B1028 | Rear window wiper motor (Park) signal error | Signal error | (see page 22-232) |
| B1032 | MICU lost communication with SRS unit (CDS message) | Loss of communication | (see page 22-102) |
| B1036 | IG1 line input error | Signal error | (see page 22-103) |
| B1077 | Windshield wiper motor (Park) signal error | Signal error | (see page 22-236) |
| B1078 | Daytime running lights signal error (Canada) | Signal error | (see page 22-157) |
| B1079 | Daytime running lights signal error (USA) | Signal error | (see page 22-157) |
| B1127 | Driver's door key cylinder switch signal error | Signal error | (see page 22-120) |
| B1128 | Driver's door lock switch signal error | Signal error | (see page 22-122) |
| B1129 | Driver's door lock knob switch signal error | Signal error | (see page 22-124) |
| B1275 | Combination light switch OFF position circuit malfunction | Signal error | (see page 22-159) |
| B1276 | Combination light switch parking (small) position circuit malfunction | Signal error | (see page 22-159) |
| B1278 | Headlight switch ON position circuit malfunction | Signal error | (see page 22-159) |
| B1279 | Headlight switch DIMMER position circuit malfunction | Signal error | (see page 22-161) |
| B1280 | Turn signal switch circuit malfunction | Signal error | (see page 22-184) |
| B1281 | Windshield wiper switch MIST position circuit malfunction | Signal error | (see page 22-241) |
| B1282 | Windshield wiper switch INT (AUTO) position circuit malfunction | Signal error | (see page 22-241) |
| B1283 | Windshield wiper switch LOW position circuit malfunction | Signal error | (see page 22-241) |
| B1284 | Windshield wiper switch HIGH position circuit malfunction | Signal error | (see page 22-241) |

(cont'd)

Protected by AR



## DTC Troubleshooting Index (cont'd)

**Gauge Control Module**

| DTC | Description | DTC type | Page |
|---|---|---|---|
| B1150 | Communication bus line error (BUS-OFF) | Loss of communication | (see page 22-104) |
| B1152 | Gauge control module internal error (EEPROM error) | Internal error | (see page 22-269) |
| B1155 | Gauge control module lost communication with the MICU (Headlight switch message) | Loss of communication | (see page 22-269) |
| B1156 | Gauge control module lost communication with the MICU (Wiper switch message) | Loss of communication | (see page 22-270) |
| B1157 | Gauge control module lost communication with the MICU (MICU message) | Loss of communication | (see page 22-270) |
| B1159 | Gauge control module lost communication with the MICU (DOORSW message) | Loss of communication | (see page 22-271) |
| B1160 | Gauge control module lost communication with the MICU (DRLOCKSW message) | Loss of communication | (see page 22-271) |
| B1168 | Gauge control module lost communication with the PCM (Engine messages) | Loss of communication | (see page 22-272) |
| B1169 | Gauge control module lost communication with the PCM (A/T message) | Loss of communication | (see page 22-272) |
| B1170 | Gauge control module lost communication with the VSA modulator-control unit (VSA message) | Loss of communication | (see page 22-273) |
| B1173 | Gauge control module lost communication with the TPMS control unit (TPMS message) | Loss of communication | (see page 22-274) |
| B1175 | Fuel level sensor (Fuel gauge sending unit) circuit open | Signal error | (see page 22-275) |
| B1176 | Fuel level sensor (Fuel gauge sending unit) circuit short | Signal error | (see page 22-277) |
| B1177 | Battery voltage abnormal | Battery voltage | (see page 22-278) |
| B1178 | F-CAN communication line error | Loss of communication | (see page 22-279) |
| B1187 | Gauge control module lost communication with the SRS unit (SRS message) | Loss of communication | (see page 22-280) |
| B1188 | Gauge control module lost communication with the MICU (RM message) | Loss of communication | (see page 22-281) |



BACK

Protected by AR



**Climate Control Unit**

| DTC | Description | DTC type | Page |
|---|---|---|---|
| B1200 | Communication bus line error (BUS-OFF) | Loss of communication | (see page 22-104) |
| B1205 | Climate control unit lost communication with gauge control module (VSP/NE massage) | Loss of communication | (see page 21-26) |
| B1206 | Climate control unit lost communication with gauge control (ECT message) | Loss of communication | (see page 21-27) |
| B1207 | Climate control unit lost communication with gauge control module (ILLUMI massage) | Loss of communication | (see page 21-28) |
| B1225 | An open in the in-car temperature sensor circuit | Signal error | (see page 21-29) |
| B1226 | A short in the in-car temperature sensor circuit | Signal error | (see page 21-31) |
| B1227 | An open in the outside air temperature sensor circuit | Signal error | (see page 21-32) |
| B1228 | A short in the outside air temperature sensor circuit | Signal error | (see page 21-33) |
| B1229 | An open in the sunlight sensor circuit | Signal error | (see page 21-34) |
| B1230 | A short in the sunlight sensor circuit | Signal error | (see page 21-35) |
| B1231 | An open in the evaporator temperature sensor circuit | Signal error | (see page 21-36) |
| B1232 | A short in the evaporator temperature sensor circuit | Signal error | (see page 21-38) |
| B1233 | An open in the driver's air mix control motor circuit | Signal error | (see page 21-39) |
| B1234 | A short in the driver's air mix control motor circuit | Signal error | (see page 21-40) |
| B1235 | A problem in the driver's air mix control linkage, door, or motor | Signal error | (see page 21-41) |
| B1236 | An open in the passenger's air mix control motor circuit | Signal error | (see page 21-43) |
| B1237 | A short in the passenger's air mix control motor circuit | Signal error | (see page 21-44) |
| B1238 | A problem in the passenger's air mix control linkage, door, or motor | Signal error | (see page 21-45) |
| B1239 | An open or short in the mode control motor circuit | Signal error | (see page 21-47) |
| B1240 | A problem in the mode control linkage, doors, or motor | Signal error | (see page 21-49) |
| B1241 | A problem in the blower motor circuit | Signal error | (see page 21-51) |

(cont'd)

Protected by AR



## DTC Troubleshooting Index (cont'd)

**HandsFreeLink Control Unit**

| DTC | Description | DTC type | Page |
|---|---|---|---|
| B1750 | Communication bus line error (BUS-OFF) | Loss of communication | (see page 22-105) |
| B1775 | Microphone input/output short to power/open | Signal error | (see page 23-231) |
| B1776 | Microphone input/output short to ground/open | Signal error | (see page 23-232) |
| B1779 | HFL switch or HFL-voice control switch (HFL talk/HFL back buttons) circuit open/short | Signal error | (see page 23-234) |
| B1780 | HFL-voice control switch (HFL talk/HFL back buttons) circuit short | Signal error | (see page 23-236) |
| B1792 | HandsFreeLink control unit internal error | Internal error | (see page 23-238) |

**Immobilizer-Keyless Control Unit**

| DTC | Description | DTC type | Page |
|---|---|---|---|
| B1900 | Communication bus line error (BUS-OFF) | Loss of communication | (see page 22-105) |
| B1905 | Immobilizer-keyless control unit lost communication with MICU (DRLOCKSW message) | Loss of communication | (see page 22-331) |
| B1906 | Immobilizer-keyless control unit lost communication with gauge control module (A/T message) | Loss of communication | (see page 22-332) |

**AcuraLink Control Unit (XM Receiver)**

| DTC | Description | DTC type | Page |
|---|---|---|---|
| B2200 | B-CAN BUS Off | Loss of communication | (see page 22-106) |
| B2204 | B-CAN communication line error | Loss of communication | (see page 23-211) |
| B2205 | F-CAN communication line error | Loss of communication | (see page 23-212) |
| B2207 | Navigation unit lost communication with AcuraLink control unit (XM receiver) | Loss of communication | (see page 23-213) |
| B2208 | HandsFreeLink control unit lost communication with AcuraLink control unit (XM receiver) | Loss of communication | (see page 23-216) |
| B2209 | AcuraLink control unit internal error | Loss of communication | (see page 23-219) |
| B2240 | XM antenna error | Loss of communication | (see page 23-219) |



BACK

Protected by AR



# System Description

## MICU Control Functions Index

The MICU (built into the under-dash fuse/relay box) is one of the B-CAN components. The MICU controls many systems related to the body controller area and a security system, and also works as a gateway to diagnose the other B-CAN connected ECUs with the HDS.
Refer to each system circuit diagram for details.

| System | Function |
|---|---|
| Multiplex Control | Sends the switch input signal information to the MICU and outputs the information. The MICU controls the ECUs electric load and communication based upon the information received the B-CAN. |
| On-Board Diagnosis | The MICU has a gateway function which sends the results of the MICU internal diagnosis and the B-CAN connected ECUs diagnosis to the HDS. |
| Self-Diagnosis | Test mode 1 diagnoses the communication line between the MICU and B-CAN connected unit. Test mode 2 checks the switch inputs connected to the MICU. |
| Interior Light(s) | The MICU controls the interior lights ON, OFF and dimming based upon the information of the related switches and/or the B-CAN related information. |
| Sleep Function | The MICU has a sleep function, which it enters during the power down mode. |

The MICU also controls the function of these circuits:

- Entry lights control (front individual map lights and ceiling light)
- Exterior lights control (including the daytime running lights control)
- Horn
- Interlock system
- Key-in reminder
- Keyless entry
- Lights-on reminder
- Power door locks
- Power window key-off timer
- Seat belt reminder
- Security alarm
- Turn signal/hazard flasher
- Wiper/washer

(cont'd)

Protected by AR



## System Description (cont'd)

### Body Controller Area Network (B-CAN) and Fast Controller Area Network (F-CAN)

The body controller area network (B-CAN) and the fast controller area network (F-CAN) share information between multiple electronic control units (ECUs). B-CAN communication moves at a slower speed (33.33 kbps) for convenience related items and for other functions. F-CAN information moves at a faster speed (500 kbps) for "real time" functions such as fuel and emissions data. To allow both systems to share information, the gauge control module translates information from B-CAN to F-CAN and from F-CAN to B-CAN.

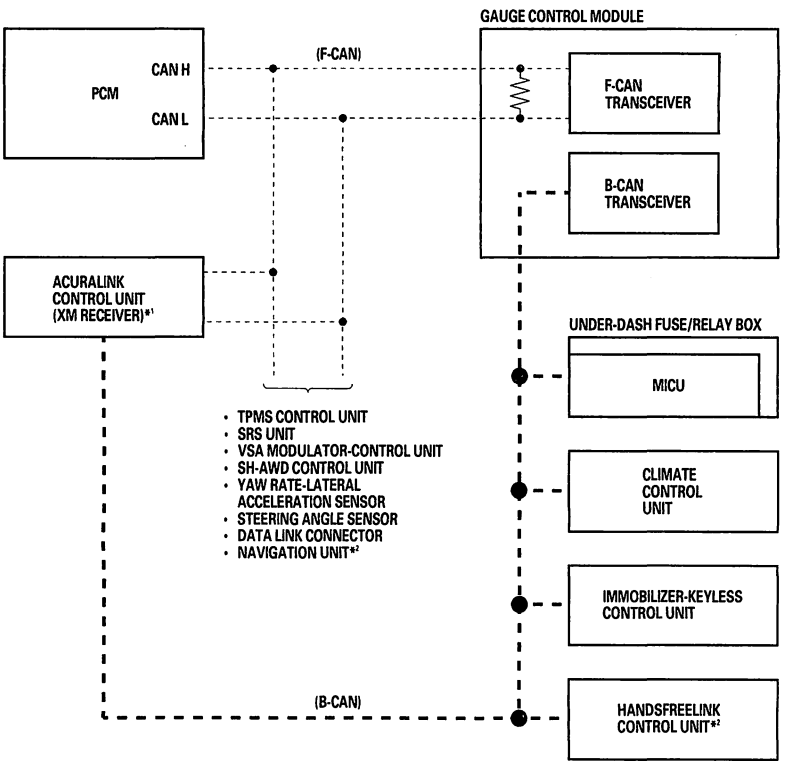


*1 : USA models with navigation
*2 : With navigation

- The single wire method is used between the units not requiring the communication to move at a fast speed.
- Using a single wire method reduces the number of the wires used on the body controller area network.



BACK

Protected by AR



## Gateway Function

The gauge control module acts as a gateway to allow both systems to share information. The gauge control module translates information from B-CAN to F-CAN and from F-CAN to B-CAN.

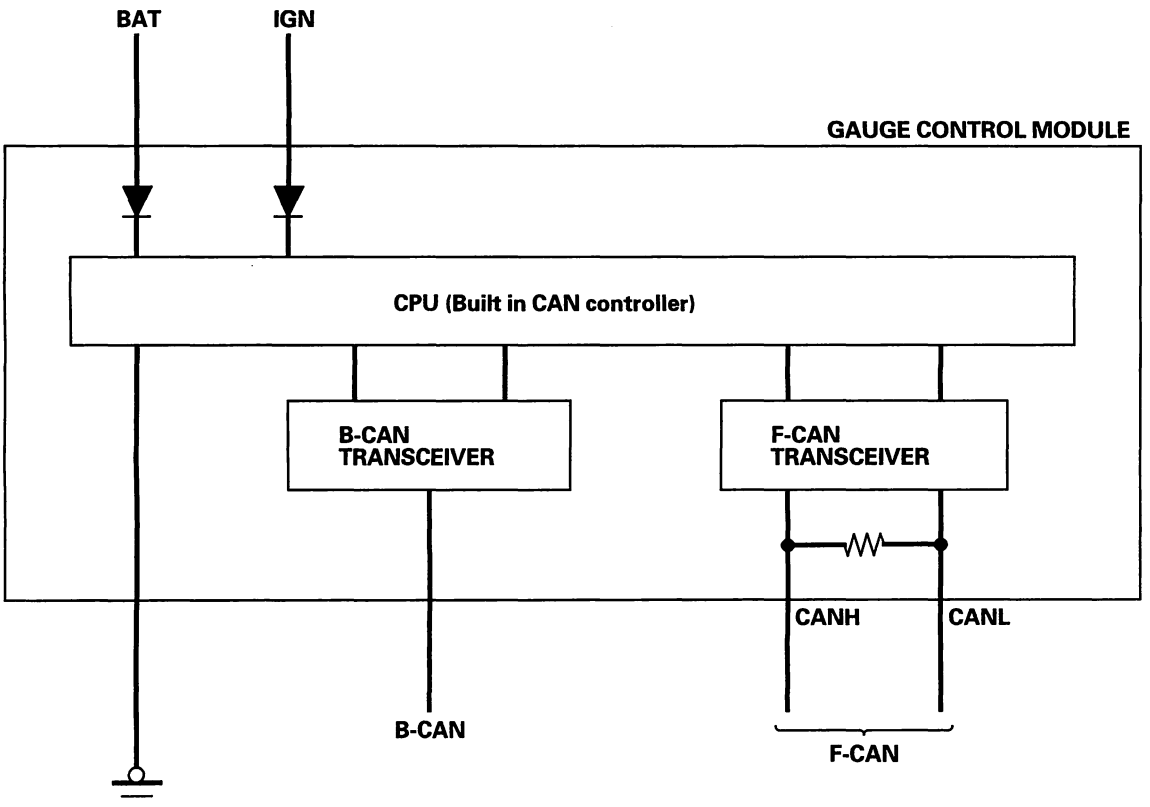


## Network "Loss of Communication" Error Checking Function

The ECUs on the CAN circuit send messages to each other. If there are any malfunctions on the network, the LCD display on the gauge control module can indicate the error messages by entering the gauge self-diagnostic function (see page 22-258).

(cont'd)

Protected by AR



## System Description (cont'd)

### Self-diagnostic Function

By connecting the HDS to the data link connector (DLC), the HDS can retrieve the diagnostic results from the MICU via a diagnostic line called K-LINE. The K-LINE is distinguished from the CAN line, and connected to the CAN related ECUs. The MICU is a gateway between the HDS and B-CAN related ECUs, and sends B-CAN diagnostic results to the HDS. When performing a function test with the HDS, the HDS sends an output signal through the K-LINE to the MICU. The MICU either relays the request to another ECU, or commands the function its self.

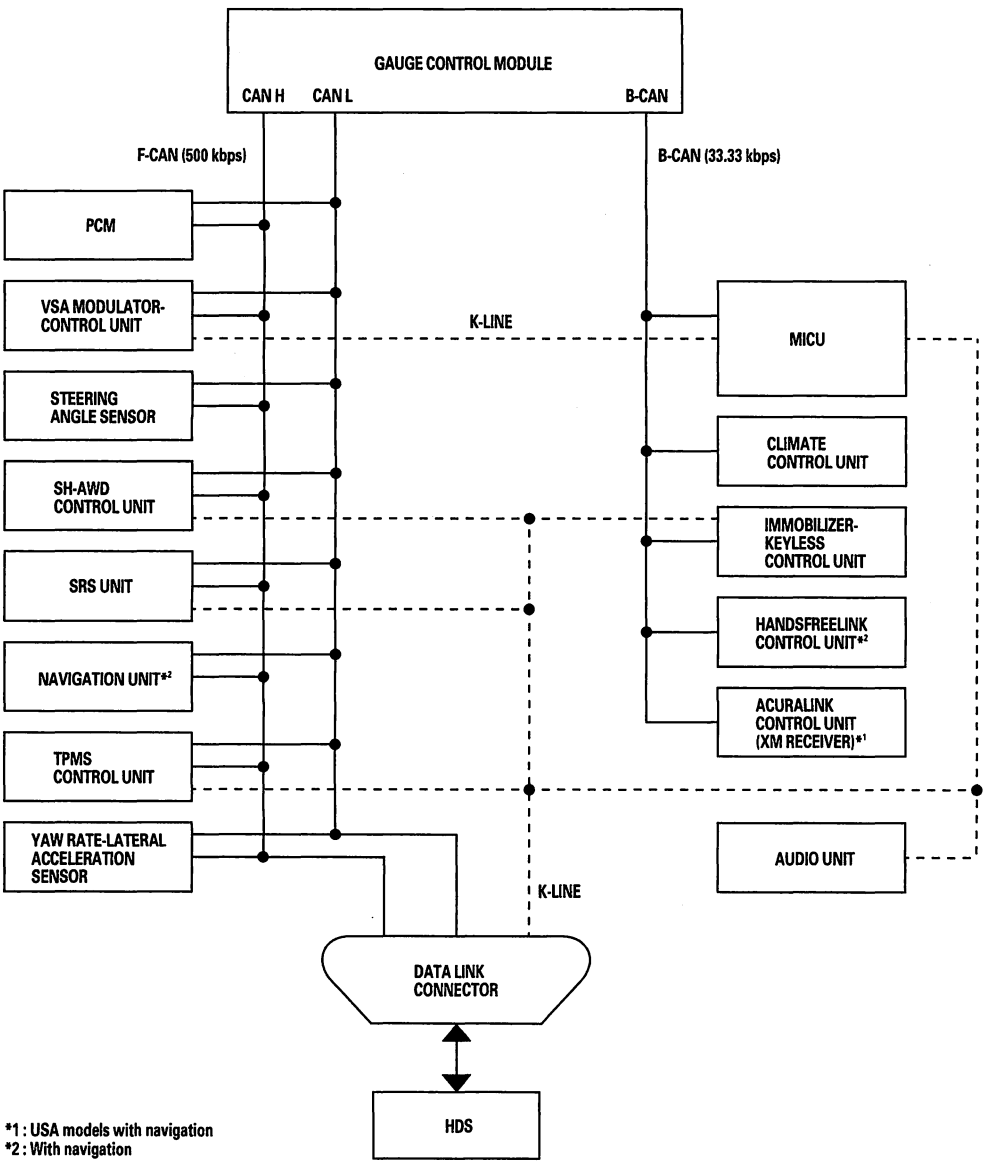


*1 : USA models with navigation
*2 : With navigation



BACK

Protected by AR



## Wake-up and Sleep Function

The multiplex integrated control system has "wake-up" and "sleep" functions to decrease parasitic draw on the battery when the ignition switch is OFF.

- *In the sleep* mode, the MICU stops functioning (communication and CPU control) when it is not necessary for the system to operate.
- As soon as any operation is requested (for example, a door is unlocked), the related control unit in the sleep mode immediately wakes up and begins to function.
- When the ignition switch is turned OFF, and the driver's door is opened, then closed, there is a delay about 40 seconds before the control unit goes from the wake-up mode to the sleep mode.
- The sleep mode will not function if any door is opened or if a key is in the ignition.
- The draw is reduced from 200 mA to less than 35 mA when in the sleep mode.

NOTE: Sleep and Wake-up Mode Test (see page 22-95).

## Fail-safe Function

To prevent improper operation, the MICU has a fail-safe function. In the fail-safe mode, the output signal is fixed when any part of the system malfunctions (for example, a faulty control unit or communication line).
Each control unit has a hardware fail-safe function that fixes the output signal when there is a CPU malfunction, and a software fail-safe function that ignores the signal from a malfunctioning control unit , which allows the system to operate normally.

## Hardware Fail-safe Control

**Fail-safe function**
When a CPU problem or a abnormal power supply voltage is detected, the MICU moves to the hardware fail-safe mode, and each system output load is set to the pre-programmed fail-safe value.

## Software Fail-safe Control

When any of the data from the B-CAN circuit cannot be received within a specified time, or an unusual combination of the data is recognized, the MICU moves to the software fail-safe mode. The data that cannot be received is forced to a pre-programmed value.

(cont'd)

Protected by AR



## System Description (cont'd)

### Power Supply Voltage Monitoring Function

The MICU monitors the power supply voltage (back-up voltage). If the voltage goes below 10 V, the MICU sends a MICU message and will not store DTCs.

| | Input | Output |
|---|---|---|
| MICU | Battery voltage | MICU*<br>*: MICU internal circuit |

### Entry Lights Control System

The MICU controls the ceiling light ON/OFF and dimming based upon the input signals from each switch.

| | Input | Output |
|---|---|---|
| MICU | IG1 power supply<br>Ignition key switch<br>Driver's door switch<br>Front passenger's door switch<br>Left rear door switch<br>Right rear door switch<br>Driver's door lock knob switch (LOCK) | Interior light |
| B-CAN | Keyless LOCK signal | |

### Lighting System (Headlights, Parking Lights, Side Marker Lights, Fog Lights, License Plate Lights, and Taillights)

The MICU contains the relay circuits of the headlight high/low beam and taillights, and controls the lighting system ON/OFF based upon the input signals from the combination light switch.

| | Input | Output |
|---|---|---|
| MICU | IG1 power supply<br>Headlight OFF switch<br>Headlight ON switch<br>Dimmer switch<br>Combination light switch (parking lights, side marker lights, license plate lights, and taillights)<br>Passing switch<br>Fog light switch | Headlights (low beam)<br>Headlights (high beam)<br>Parking lights<br>Side marker lights<br>License plate lights<br>Taillights<br>Lid lights<br>Fog light |

### Daytime Running Lights

The MICU controls the exterior lights as a daytime running lights based upon the input signals from the each switch.

| | Input | Output |
|---|---|---|
| MICU | IG1 power supply<br>Headlight OFF switch<br>Headlight ON switch<br>Dimmer switch<br>Passing switch | Headlights (low beam)<br>Headlights (high beam)<br>Parking lights<br>Slide marker lights<br>License plate lights |
| B-CAN | Parking brake switch | Taillights |



BACK

Protected by AR



## Turn Signal/Hazard Flasher

The MICU controls the turn signal/hazard flasher based upon the input signals from the turn signal and hazard warning switches.

| | Input | Output |
|---|---|---|
| MICU | IG1 power supply<br>Turn signal switch (left/right)<br>Hazard warning switch | Turn signal lights (left/right) |

## Power Door Locks (Vehicle Speed Sense)

The MICU controls the door lock actuators based upon the B-CAN and input signals.

| | Input | Output |
|---|---|---|
| MICU | IG1 power supply<br>Driver's door switch<br>Front passenger's door switch<br>Left rear door switch<br>Right rear door switch<br>Tailgate latch switch<br>Driver's door lock knob switch (UNLOCK)<br>Front passenger's door lock knob switch (UNLOCK)<br>Left rear door lock knob switch (UNLOCK)<br>Right rear door lock knob switch (UNLOCK)<br>Transmission range switch (P position) | Door lock (LOCK) |
| B-CAN | Vehicle speed pulse<br>SRS (CDS) signal<br>Engine RPM | |

## Power Door Locks (Normally LOCK/UNLOCK Operation)

The MICU controls the door lock actuators based upon the input signals of each switch.

| | Input | Output |
|---|---|---|
| MICU | IG1 power supply<br>Ignition key switch<br>Driver's door switch<br>Front passenger's door switch<br>Left rear door switch<br>Right rear door switch<br>Tailgate latch switch<br>Driver's door lock knob switch (LOCK)<br>Driver's door lock switch (LOCK/UNLOCK)<br>Driver's door key cylinder switch (UNLOCK)<br>Front passenger's door lock switch (LOCK/UNLOCK) | Door lock actuators (LOCK/UNLOCK) |
| B-CAN | SRS (CDS) signal | |

## Door Lock Response Operation

The MICU controls the door lock actuators based upon the B-CAN signals.

| | Input | Output |
|---|---|---|
| B-CAN | Door lock signals | Door lock actuator (LOCK/UNLOCK)<br>Driver's door lock actuator (UNLOCK)<br>Tailgate release actuator |

## Power Window Key-off Operation

The MICU controls the power windows key-off operation based upon the input signals.

| | Input | Output |
|---|---|---|
| MICU | IG1 power supply<br>Ignition key switch<br>Driver's door switch<br>Front passenger's door switch | Power window key-off timer |

(cont'd)

Protected by AR



## System Description (cont'd)

### Keyless Entry System

The MICU controls the door lock actuators based upon the input signals of each switch and the B-CAN signals.

| | Input | Output |
|---|---|---|
| MICU | IG1 power supply<br>Ignition key switch<br>Driver's door switch<br>Front passenger's door switch<br>Left rear door switch<br>Right rear door switch<br>Tailgate latch switch<br>Driver's door lock knob switch (LOCK/UNLOCK)<br>Driver's door lock switch (LOCK/UNLOCK)<br>Driver's door key cylinder switch (LOCK/UNLOCK)<br>Front passenger's door lock switch (LOCK/UNLOCK) | Door lock actuator (LOCK/UNLOCK)<br>Driver's door lock actuator (UNLOCK)<br>Tailgate release actuator |
| B-CAN | Keyless LOCK signal | |

### Keyless PANIC

The MICU controls the keyless PANIC based upon the B-CAN signals.

| | Input | Output |
|---|---|---|
| B-CAN | Keyless PANIC signal (action, headlight low, parking light and horn) | Headlights (low beam)<br>Parking lights<br>Side marker lights<br>License plate lights<br>Taillights<br>Horn |

### Security Alarm System

The MICU controls the lighting system and horn based upon the input signals of each switch and the B-CAN signals.

| | Input | Output |
|---|---|---|
| MICU | IG1 power supply<br>Ignition key switch<br>Audio switch<br>Driver's door switch<br>Front passenger's door switch<br>Left rear door switch<br>Right rear door switch<br>Tailgate latch switch<br>Driver's door key cylinder switch (LOCK/UNLOCK)<br>Driver's door lock knob switch (UNLOCK)<br>Front passenger's door lock knob switch (UNLOCK)<br>Left rear door lock knob switch (UNLOCK)<br>Right rear door lock knob switch (UNLOCK)<br>Tailgate latch switch<br>Hood switch | Horn<br>Headlights (low beam)<br>Parking lights<br>Side marker lights<br>License plate lights<br>Taillights |
| B-CAN | Keyless LOCK signal<br>Door lock signal | |



BACK

Protected by AR



## Key Interlock

The MICU controls the key interlock solenoid based upon the IG1, the transmission range switch, and the park-pin switch signals.

| | Input | Output |
|---|---|---|
| MICU | Ignition switch ACC<br>Transmission range switch (P position)<br>Park-pin switch | Key interlock solenoid |

## Answer Back Response Operation

The MICU controls the lighting system and keyless buzzer based upon the B-CAN signals.

| | Input | Output |
|---|---|---|
| B-CAN | Answer back signals (headlight low, keyless buzzer, parking lights) | Keyless buzzer<br>Headlights<br>Parking lights<br>Side marker lights<br>License plate lights<br>Taillights |

## Windshield Wiper/Washer

The MICU controls the windshield wiper motor and the washer motor based upon the IG1, wiper/washer switch windshield wiper motor signals and the B-CAN signals.

| | Input | Output |
|---|---|---|
| MICU | IG1 power supply<br>Windshield wiper switch (INT and LO)<br>Windshield wiper switch (LO and HI)<br>Windshield washer switch<br>Windshield wiper intermittent volume<br>Windshield wiper motor signal | Windshield wiper motor<br>Windshield washer motor |
| B-CAN | IG1 power supply | |

## Rear Wiper/Washer

The MICU controls the rear wiper motor and the washer motor based upon the IG1, wiper/washer switch and the rear wiper motor signals.

| | Input | Output |
|---|---|---|
| MICU | IG1 power supply<br>Rear wiper switch<br>Rear washer switch<br>Rear wiper motor signal | Rear wiper motor<br>Rear washer motor |

## Collision Detection Signal (CDS)

The MICU controls the door lock actuators based upon the IG1 and the B-CAN signals.

| | Input | Output |
|---|---|---|
| MICU | IG1 power supply | Door lock (UNLOCK) |
| B-CAN | SRS signal (front and side)<br>Impact sensors and roll rate sensor | |

(cont'd)

Protected by AR



## System Description (cont'd)

### HDS Inputs and Commands

Certain inputs happen so quickly that the HDS cannot update fast enough. Hold the switch that is being tested while monitoring the Data List. This should give the HDS time to update the signal on the Data List.
Because the HDS software is updated to support the release for newer vehicles it is not uncommon to see system function tests that are not supported.
Make sure that the most current software is loaded.

**Input:**

| System Menu | Data List | Data List Indication |
|---|---|---|
| Gauges | Cruise Control Main Switch | OFF/ON |
| | Cruise Control Set Switch | OFF/ON |
| | Cruise Control Resume Switch | OFF/ON |
| | Washer Fluid Level Switch | OFF/ON |
| | Gauge Select/Reset Switch | OFF/ON |
| | Parking Brake Switch | OFF/ON |
| | Brake Fluid Level Switch | OFF/ON |
| | Illumination Volume Plus Switch | OFF/ON |
| | Illumination Volume Minus Switch | OFF/ON |
| | km/h Mile/h Select Switch | OFF/ON |
| | Fuel Sending Unit Input 1 | deg |
| | Fuel Sending Unit Input 2 | VOLTAGE |
| | ABS Indicator | OFF/ON |
| | EBD Indicator (Electronic Brake Distribution) | OFF/ON |
| | Cruise Control Main Switch Indicator | OFF/ON |
| | MIL Indicator | OFF/ON |
| | Washer Fluid Level Indicator (Canada) | OFF/ON |
| | DRL Indicator | OFF/ON |
| | Low Oil Pressure Indicator | OFF/ON |
| | Charging System Indicator | OFF/ON |
| | Cruise Main Switch ON Indicator | OFF/ON |
| | Maintenance Minder Indicator | OFF/ON |
| | High Beam Indicator | OFF/ON |
| | Parking Light ON Indicator | OFF/ON |
| | Low Fuel Warning Indicator | OFF/ON |
| | Security Indicator | OFF/ON |
| | Fog light Indicator | OFF/ON |
| | Seat Belt Indicator | OFF/ON |
| | Speed Indicator (km/h) | 0—249 km/h, over 250 km/h, Fail |
| | Speed Indicator (mile/h) | 0—154 mile/h, over 155 mile/h, Fail |
| | A/T Gear Position Switch (R) | OFF/ON |
| | A/T Gear Position Switch (P) | OFF/ON |
| Lighting | Driver's Door Switch | OFF/ON |
| | Hazard Switch | OFF/ON |
| | Headlight Switch (OFF) | OFF/ON |
| | Headlight Switch (PARKING) | OFF/ON |
| | Headlight Switch (HEADLIGHT) | OFF/ON |
| | Headlight Switch (High Beam) | OFF/ON |
| | Headlight Switch (PASSING) | OFF/ON |
| | Turn Signal Switch (LEFT) | OFF/ON |
| | Turn Signal Switch (RIGHT) | OFF/ON |
| | Fog Light Switch | OFF/ON |
| | Interior Light Command (Ignition Key Cylinder Light Command) | OFF/ON |
| | Left Turn Signal Command | OFF/ON |
| | Right Turn Signal Command | OFF/ON |
| | Headlight Command | OFF/ON |
| | Headlight High Beam Command | OFF/ON |
| | Parking Light Command | OFF/ON |
| | Fog Light Command | OFF/ON |
| | DRL Command | OFF/ON |



BACK

Protected by AR



| System Menu | Data List | Data List Indication |
|---|---|---|
| Door Locks | Driver's Door Switch | OFF/ON |
| | Front Passenger's Door Switch | OFF/ON |
| | Driver's Rear Door Switch | OFF/ON |
| | Passenger's Rear Door Switch | OFF/ON |
| | Front Passenger's Door Lock Sw. (LOCK) | OFF/ON |
| | Front Passenger's Door Lock Sw. (UNLOCK) | OFF/ON |
| | Front Passenger's Door Lock Knob Sw. (UNLOCK) | OFF/ON |
| | Driver's Rear Door Lock Knob Switch (UNLOCK) | OFF/ON |
| | Passenger's Rear Door Lock Knob Sw. (UNLOCK) | OFF/ON |
| | Driver's Door Key Cylinder Switch (LOCK) | OFF/ON |
| | Driver's Door Key Cylinder Switch (UNLOCK) | OFF/ON |
| | Driver's Door Lock Switch (LOCK) | OFF/ON |
| | Driver's Door Lock Switch (UNLOCK) | OFF/ON |
| | Driver's Door Lock Knob Switch (LOCK) | OFF/ON |
| | Driver's Door Lock Knob Switch (UNLOCK) | OFF/ON |
| | Door LOCK Command | OFF/ON |
| | Door UNLOCK Command | OFF/ON |
| | Driver's Door UNLOCK Command | OFF/ON |
| Keyless | Driver's Door Switch | OFF/ON |
| | Front Passenger's Door Switch | OFF/ON |
| | Driver's Rear Door Switch | OFF/ON |
| | Passenger's Rear Door Switch | OFF/ON |
| | Tailgate Switch | OFF/ON |
| | Front Passenger's Door Lock Sw. (LOCK) | OFF/ON |
| | Front Passenger's Door Lock Sw. (UNLOCK) | OFF/ON |
| | Front Passenger's Door Lock Knob Sw. (UNLOCK) | OFF/ON |
| | Driver's Rear Door Lock Knob Switch (UNLOCK) | OFF/ON |
| | Passenger's Rear Door Lock Knob Sw. (UNLOCK) | OFF/ON |
| | Driver's Door Key Cylinder Switch (LOCK) | OFF/ON |
| | Driver's Door Key Cylinder Switch (UNLOCK) | OFF/ON |
| | Driver's Door Lock Switch (LOCK) | OFF/ON |
| | Driver's Door Lock Switch (UNLOCK) | OFF/ON |
| | Driver's Door Lock Knob Switch (LOCK) | OFF/ON |
| | Driver's Door Lock Knob Switch (UNLOCK) | OFF/ON |
| | Door LOCK Command | OFF/ON |
| | Door UNLOCK Command | OFF/ON |
| | Driver's Door UNLOCK Command | OFF/ON |
| Wipers | Brake Pedal Position Switch | OFF/ON |
| | Windshield Wiper Switch (LOW) | OFF/ON |
| | Windshield Wiper Switch (HIGH) | OFF/ON |
| | Windshield Wiper Switch (MIST) | OFF/ON |
| | Windshield Wiper Switch (INT) | OFF/ON |
| | Windshield Washer Switch | OFF/ON |
| | Windshield Wiper Motor PARK Switch | OFF/ON |
| | Intermittent Wiper Dwell Timer | 0.0—1.0 kΩ/OPEN |
| | Windshield Wiper Motor HI Command | OFF/ON |
| | Windshield Wiper Motor LO Command | OFF/ON |
| | Windshield Washer Motor Command | OFF/ON |
| | Rear Wiper Switch | OFF/ON |
| | Rear Washer Switch | OFF/ON |
| | Rear Wiper Auto Stop Switch | OFF/ON |

(cont'd)

Protected by AR



## System Description (cont'd)

| System Menu | Data List | Data List Indication |
|---|---|---|
| Security | Ignition Key Cylinder Switch | OFF/ON |
| | Driver's Door Switch | OFF/ON |
| | Front Passenger's Door Switch | OFF/ON |
| | Driver's Rear Door Switch | OFF/ON |
| | Passenger's Rear Door Switch | OFF/ON |
| | Tailgate Switch | OFF/ON |
| | Front Passenger's Door Lock Sw. (LOCK) | OFF/ON |
| | Front Passenger's Door Lock Sw. (UNLOCK) | OFF/ON |
| | Front Passenger's Door Lock Knob Sw. (UNLOCK) | OFF/ON |
| | Driver's Rear Door Lock Knob Switch (UNLOCK) | OFF/ON |
| | Passenger's Rear Door Lock Knob Sw. (UNLOCK) | OFF/ON |
| | Radio Switch | OFF/ON |
| | Hood Switch | OFF/ON |
| | Driver's Door Key Cylinder Switch (LOCK) | OFF/ON |
| | Driver's Door Key Cylinder Switch (UNLOCK) | OFF/ON |
| | Driver's Door Look Switch (LOCK) | OFF/ON |
| | Driver's Door Look Switch (UNLOCK) | OFF/ON |
| | Driver's Door Look Knob Switch (LOCK) | OFF/ON |
| | Driver's Door Look Knob Switch (UNLOCK) | OFF/ON |
| | Door LOCK Command | OFF/ON |
| | Door UNLOCK Command | OFF/ON |
| | Driver's Door UNLOCK Command | OFF/ON |
| | Headlight Command | OFF/ON |
| | Parking Light Command | OFF/ON |
| | Horn Command | OFF/ON |



BACK

Protected by AR



**Function Test:**

| System Menu | Data List Indication | Data List and Operation Time |
|---|---|---|
| Door | LOCK all doors | Outputs LOCK signal 1 time (0.6 sec) to all doors |
| | UNLOCK driver's side door | Outputs UNLOCK signal 1 time (0.6 sec) to driver's door |
| | UNLOCK all doors | Outputs UNLOCK signal 1 time (0.6 sec) to all doors |
| Lighting | Interior Light Command | Illuminates for 30 seconds. |
| | LEFT Turn Signal Command | Blinks for 5 seconds. |
| | RIGHT Turn Signal Command | Blinks for 5 seconds. |
| | Hazard flasher | Blinks turn signal (left and right) for 15 seconds. |
| | Headlight Command | Operates headlight (low) for 15 seconds. |
| | Headlight HIGH Beam Command | Operates headlight (high) for 15 seconds. |
| | Fog Light | Operates a relay of front fog lights for 15 seconds. |
| | Parking Light Command | Operates small lights for 15 seconds. |
| Keyless | Trunk Lid/Tailgate Release Command | Unlock trunk |
| Security | Horn Command | Operates horn for 1 second. |
| Wipers | Windshield Wiper Motor LOW Command | Operates windshield wiper motor for 5 seconds (low speed). |
| | Windshield Wiper Motor HIGH Command | Operates windshield wiper motor for 5 seconds (high speed). |
| | Windshield Washer Command | Operates windshield washer motor for 5 seconds. |
| | Rear Wiper Motor | Illuminate for 15 seconds. |
| | Rear Wiper Washer | Illuminate for 15 seconds. |
| Gauges | Self Diagnostic Test | ——— |
| | Speedometer | 0—300 mph |
| | Tachometer | 0—10,000 rpm |
| | Fuel Level Gauge | 0—255 litter |
| | Engine Temperature Gauge | 0—150 deg (℃) |
| | ABS Indicator | Illuminates for 10 seconds. |
| | EBD Indicator (Electronic Brake Distribution) | Illuminates for 10 seconds. |
| | Cruise Activation Indicator | Illuminates for 10 seconds. |
| | MIL Status | Illuminates for 10 seconds. |
| | Windshield Washer Fluid Level Indicator | Illuminates for 10 seconds. |
| | Daytime Running Light Indicator (Canada) | Illuminates for 10 seconds. |
| | Engine Oil Pressure Indicator | Illuminates for 10 seconds. |
| | Charging System Indicator | Illuminates for 10 seconds. |
| | Cruise Control Main Switch Indicator | Illuminates for 10 seconds. |
| | Maintenance Required Indicator | Illuminates for 10 seconds. |
| | High Beam Indicator | Illuminates for 10 seconds. |
| | Light On Indicator | Illuminates for 10 seconds. |
| | Low fuel level Indicator | Illuminates for 10 seconds. |
| | Security Indicator | Illuminates for 10 seconds. |
| | Fog Light | Illuminates for 10 seconds. |
| | Seat Belt Indicator Lamp | Illuminates for 10 seconds. |
| | Trip Meter | 0—9999.9 (mph) |
| | A/T Gear Position Indicator (P) | Illuminates for 10 seconds. |
| | A/T Gear Position Indicator (R) | Illuminates for 10 seconds. |
| | A/T Gear Position Indicator (N) | Illuminates for 10 seconds. |
| | A/T Gear Position Indicator (D) | Illuminates for 10 seconds. |
| | A/T Gear Position Indicator (D3) | Illuminates for 10 seconds. |
| | A/T Gear Position Indicator (2) | Illuminates for 10 seconds. |
| | A/T Gear Position Indicator (1) | Illuminates for 10 seconds. |
| | Illumination Brightness Control | (Illuminates for meter panel according) 30—100 % |
| | Key Alarm Chime | Sound alarm for 10 seconds. |
| | Headlight Alarm Chime | Sound alarm for 10 seconds. |
| | Seat Belt Reminder Chime | Sound alarm for 10 seconds. |

Protected by AR



## Troubleshooting - B-CAN System Diagnosis Test Mode A

Check the PCM for DTCs and troubleshoot PCM (see page 11-3) or F-CAN loss of communication errors first, then perform this diagnosis if the symptom is related to the B-CAN system.

NOTE: Always cycle the ignition switch within 3 seconds when prompted in the DTC troubleshooting procedures in this section.

1. Compare the symptom with this list of B-CAN related systems:

   - Gauge control module
   - Exterior lights
   - Turn signals
   - Entry light control
   - Interior lights
   - Door-open and tailgate-open indicators
   - Horns (security and panic)
   - Chimes (key-in, seat belt, lights-on, and parking brake)
   - Power window/moonroof timer
   - Wiper/washer
   - Security
   - Keyless entry
   - Power door locks
   - Key interlock
   - Dash light brightness
   - Immobilizer

   *Is the symptom related to the B-CAN system?*

   **YES**—Go to step 2.

   **NO**—Go to the system troubleshooting for the system with the symptom.■

2. Connect the HDS to the data link connector (A), then turn the ignition switch ON (II).

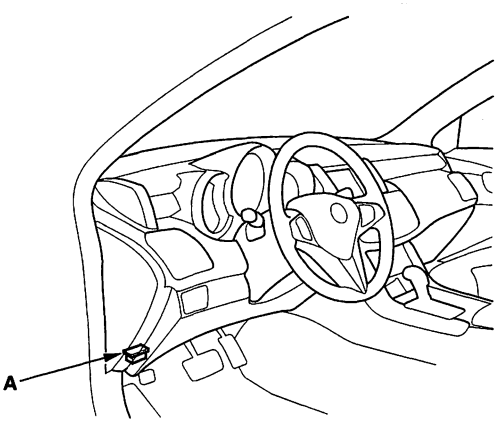


3. From the BODY ELECTRICAL menu, select UNIT INFORMATION, and then select CONNECTED UNIT listed to see if the following control units are communicating with the HDS.

   - MICU
   - Gauge control module
   - Immobilizer-keyless control unit
   - Climate control unit
   - HandsFreeLink control unit (with navigation)
   - Acuralink control unit (XM receiver) (USA models with navigation)

   NOTE:
   - If a unit is communicating with the HDS, DETECT will be displayed.
   - If a unit is not communicating or the vehicle is not equipped, "Not Available" will be displayed.

   *Are all control units communicating with the HDS?*

   **YES**—Go to step 4.

   **NO**—If any of the control units are not communicating, go to B-CAN System Diagnosis Test Mode B (see page 22-90). If all units are not communicating or only the MICU is communicating, go to DTC B1000 troubleshooting (see page 22-99). ■



BACK

Protected by AR



4. Select the system that has the problem from the BODY ELECTRICAL menu, then select DTCs.

   *Are any DTCs indicated?*

   **YES**—Go to step 5.

   **NO**—If the problem is related to one of the following items, go to B-CAN System Diagnosis Test Mode C (see page 22-91) if the system does not stop or turn off. Go to Test Mode D (see page 22-92) if the system does not run or turn on.

   - Exterior lights
   - Turn signals
   - Entry light control
   - Interior lights
   - Horn (security and panic)
   - Wiper/washer

   If the problem is related to one of the following items, go to the troubleshooting for that individual system. ■

   - Gauge control module
   - Door-open and tailgate-open indicators
   - Chimes (key-in, seat belt, lights-on, and parking brake)
   - Security
   - Keyless entry
   - Key interlock
   - Dash light brightness
   - Audio system
   - Navigation (if equipped)

5. Record all DTCs, and sort them by DTC type.

6. Troubleshoot the DTC(s) in this order:

   - Battery voltage DTCs.
   - Internal error DTCs.
   - Loss of communication DTCs. Begin troubleshooting with the lowest number first (Example: if DTC B1008 and B1011 are retrieved, begin by troubleshooting B1008).
   - Signal error DTCs.

Protected by AR



## Troubleshooting - B-CAN System Diagnosis Test Mode B

Perform this diagnosis if any of the control units are not communicating (Not Available is displayed in the HDS) as found by the B-CAN System Diagnosis Test Mode A (see page 22-88).

1. Using the HDS, select the system that has the symptom from the BODY ELECTRICAL menu.

2. Select DTCs, and then check for loss of communication DTCs.

   *Are any loss of communication DTCs indicated?*

   **YES**—Go to step 3.

   **NO**—Replace the MICU. ■

3. Perform the input test for the unit not communicating with the HDS.

| Unit not communicating |
|---|
| MICU (see page 22-107) |
| Gauge control module (see page 22-282) |
| Immobilizer-keyless control unit (see page 22-342) |



BACK

Protected by AR



## Troubleshooting - B-CAN System Diagnosis Test Mode C

Perform this diagnosis if a component that is controlled by the B-CAN system does not stop or turn off.

NOTE:
- If the component does not turn on, go to B-CAN System Diagnosis Test Mode D (see page 22-92).
- See the B-CAN system unit input/output index for a list of input and output devices and the control units that monitor the input and controls the output devices (see page 22-84).
- Always cycle the ignition switch within 3 seconds when prompted in the DTC troubleshooting procedures in this section.

1. Check for DTCs by selecting the TEST MODE menu from the HDS.

   *Are any DTCs indicated?*

   **YES**—Go to B-CAN System Diagnosis Test Mode A (see page 22-88).■

   **NO**—Go to step 2.

2. Turn off the switch that controls the malfunctioning component.

3. Select DATA LIST from the TEST MODE menu, and check the input of the switch that controls the component.

   *Does the HDS indicate the switch is OFF?*

   **YES**—Go to step 4.

   **NO**—Go to step 6.

4. In the DATA LIST, check the output signal of the malfunctioning component.

   *Is the output signal OFF?*

   **YES**—Go to step 5.

   **NO**—Replace the control unit that controls the device that will not turn OFF.■

5. Check the relay, if applicable, then check for a short in the wire between the relay and the component, the relay and control unit, or the component and control unit.

   *Are the relay and the wire harness OK?*

   **YES**—Replace the control unit that controls the component that will not turn OFF.■

   **NO**—Replace the relay or repair the wire harness.■

6. Check the switch, then check for a short in the wire between the switch and the control unit that monitors the switch.

   *Is the switch and wire harness OK?*

   **YES**—Replace the control unit that monitors the switch.■

   **NO**—Replace the switch or repair the wire harness.■

Protected by AR



## Troubleshooting - B-CAN System Diagnosis Test Mode D

Perform this diagnosis if a component that is controlled by the B-CAN system does not run or come on.

NOTE:
- If the component does not turn off or stop, go to B-CAN System Diagnosis Test Mode C (see page 22-91).
- See the B-CAN system unit input/output index for a list of input and output devices and the control units that monitor the input and controls the output devices (see page 22-84).
- Always cycle the ignition switch within 3 seconds when prompted in the DTC troubleshooting procedures in this section.

1. Check the fuse of the malfunctioning output device.

   *Is the fuse OK?*

   **YES**—Go to step 2.

   **NO**—Replace the fuse and recheck. ■

2. Check for DTCs by selecting the TEST MODE menu from the HDS.

   *Are any DTCs indicated ?*

   **YES**—Go to B-CAN System Diagnosis Test Mode A (see page 22-88). ■

   **NO**—Go to step 3.

3. Turn ON the switch that controls the malfunctioning component.

4. Select DATA LIST from the TEST MODE menu, and check output signal for the malfunctioning component.

   *Is there an output signal?*

   **YES**—Go to step 5.

   **NO**—Go to step 9.

5. Check the relay and ground, then check for an open or a short in the circuit for the malfunctioning component.

   *Are the relay and circuit OK?*

   **YES**—Go to step 6.

   **NO**—Replace the relay or repair the wire circuit. ■

6. Perform the function test for the malfunctioning component.

   *Does the output device pass the function test?*

   **YES**—Go to step 7.

   **NO**—Replace the component. ■

7. With the malfunctioning output device connected, connect a voltmeter between the malfunctioning output device and body ground on the wire that the control unit uses to control the output device circuit.

8. Select MISC. TEST from the TEST MODE menu, and do the forced operation test of the malfunctioning component.

   *Is there a change in voltage (12 V to 0 V or 0 V to 12 V)?*

   **YES**—Replace the component. ■

   **NO**—Replace the control unit that controls the malfunctioning component. ■

9. Select DATA LIST from the TEST MODE menu, and make sure the switch signal input for the malfunctioning system indicates a change when operated.

   *Does the switch input indicated ON when the switch is ON?*

   **YES**—Replace the control unit that controls the malfunctioning component. ■

   **NO**—Go to step 10.

10. Check the switch and its ground (if applicable), then check for an open or a short in the wire between the switch and the control unit that monitors it.

    *Is the switch and the wire harness OK?*

    **YES**—Replace the control unit that monitors the switch. ■

    **NO**—Replace the switch or repair the wire harness. ■



BACK

Protected by AR



# Troubleshooting - B-CAN System Diagnosis Test Mode 1 and Test Mode 2 (without the HDS)

**Special Tools Required**
MPCS (MCIC) service connector 07WAZ-001010A

## Test Mode 1

Check the PCM for DTCs and troubleshoot PCM (see page 11-3) or F-CAN loss of communication errors first, then perform this diagnosis if the HDS is not available.

1. Check the No. 23 (10 A) fuse in the under-hood fuse/relay box and No. 10 (7.5 A) fuse in the under-dash fuse/relay box.

   *Are the fuses OK?*

   **YES**—Go to step 2.

   **NO**—Find and repair the cause of the blown fuse.■

2. Remove the driver's dashboard undercover (see page 20-102).

3. Turn the ignition switch ON (II), and move the ceiling light switch to the middle (door) position.

4. Connect the MPCS service connector (A) to the MICU service check connector (B) in the under-dash fuse/relay box.

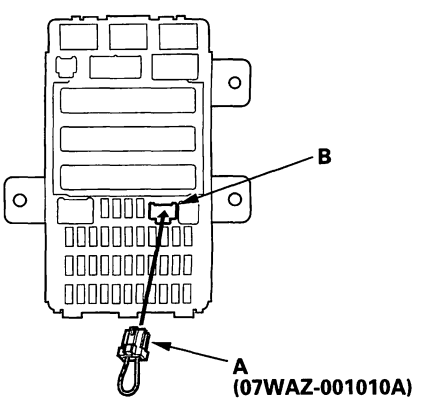


5. Wait 5 seconds, and watch the ceiling light. When the ceiling light flashes quickly once, and then goes off the system is in Test Mode 1.

6. Check for B-CAN DTCs indicated by the gauge control module LCD display while still in Test Mode 1. Push the odometer select/reset button to display the next code. After you get to the last code, the display shows END. If no DTCs are stored, the display will read NO.

   *Are any DTCs indicated?*

   **YES**—Go to step 7.

   **NO**—Go to step 10.

7. Record all DTCs and sort them.

8. Troubleshoot the DTCs in this order:

   - Battery voltage DTCs
   - Internal error DTCs
   - Loss of communication DTCs (begin with the lowest number first; for example, if B1008 and B1011 are retrieved, troubleshoot B1008 first)
   - Signal error DTCs

9. Clear the DTCs by pressing and holding the select/reset button for about 10 seconds. You will hear a beep to confirm the code have been cleared. Operate the devices that failed, and recheck for codes.

**Test Mode 2**

10. Remove the MPCS service connector from the under-dash fuse/relay box socket for 5—10 seconds, then re-insert it to enter Mode 2. When the system enters Mode 2, the ceiling light will flash two times quickly and then go off.

    NOTE: If the MPCS connector is disconnected for too short or too long of a time, or the ignition switch is turned OFF, the system will return to Test Mode 1.

11. The following tables list the circuits that can be checked in Test Mode 2. Operate the switch that is most closely related to the problem. If the circuit is OK, the ceiling light will blink once. If the circuit is faulty, there will be no indication.

(cont'd)

Protected by AR



## Troubleshooting - B-CAN System Diagnosis Test Mode 1 and Test Mode 2 (without the HDS) (cont'd)

**MICU**

| Item |
|---|
| Driver's door lock switch (UNLOCK) |
| Driver's door lock switch (LOCK) |
| Driver's door lock knob switch (UNLOCK) |
| Driver's door lock knob switch (LOCK) |
| Driver's door key cylinder switch (UNLOCK)* |
| Driver's door key cylinder switch (LOCK)* |
| Front passenger's door lock switch (UNLOCK) |
| Front passenger's door lock switch (LOCK) |
| Front passenger's door lock knob switch (UNLOCK) |
| Left rear door lock knob switch (UNLOCK) |
| Right rear door lock knob switch (UNLOCK) |
| Driver's door switch (OPEN) |
| Front passenger's door switch (OPEN) |
| Left rear door switch (OPEN) |
| Right rear door switch (OPEN) |
| Trunk lid/Tailgate switch (OPEN) |
| Audio switch |
| Windshield wiper HI/LO switch |
| Windshield wiper INT/LO switch |
| Windshield wiper MIST switch |
| Windshield washer switch (ON) |
| Windshield wiper intermittent dwell time controller |
| Turn signal switch (LEFT) |
| Turn signal switch (RIGHT) |
| Hazard warning switch (ON) |
| Headlight switch (ON) |
| Headlight switch (OFF) |
| Lighting switch (ON) |
| Dimmer switch (ON) |
| Passing switch (ON) |
| Hood switch (OPEN) |
| Transmission range switch (P) |
| Brake switch (ON) |
| Fog light switch |
| Ignition key cylinder switch |
| Windshield wiper motor park switch |
| Rear washer switch |
| Rear wiper motor park switch |
| Rear wiper switch (ON) |
| Transmission range switch (R) |
| A/C pressure switch/thermal protector |

* A second key is necessary to check the key cylinder inputs.
Be sure to rotate the key cylinder switch two times to each position (lock and lock, unlock and unlock) to ensure the door lock knob switch is in the appropriate position.

*Does the ceiling light work properly in all switch positions?*

**YES**—Go to function and input test for the system related to the failure. ■

**NO**—Repair the open, short, or replace the faulty switch. ■



BACK

Protected by AR



## Sleep and Wake-up Mode Test

1. Shift to the sleep mode:
   Turn the ignition switch OFF, and remove the key, then open and close the driver's door. If the MICU receives no signals from the inputs listed below, it will go into sleep mode in less than 40 seconds.

| |
|---|
| Driver's door lock switch (LOCK or UNLOCK) |
| Driver's door key cylinder switch (LOCK or UNLOCK) |
| Front passenger's door lock switch (LOCK or UNLOCK) |
| Tailgate latch switch (Tailgate closed) |
| Hazard warning switch (OFF) |

2. Confirm the sleep mode:
   Check for voltage on the B-CAN communication line (PNK wires); there should be battery voltage in the sleep mode. Check the parasitic draw at the battery while shifting into the sleep mode; amperage should change from about 200 mA to less than 35 mA.

3. Shift to the wake up mode:
   When the ignition switch is turned ON (II), the MICU, gauge control module, immobilizer-keyless control unit-receiver, and PCM wake up at the same time without "talking" to each other through the communication lines. When any switch in the multiplex integrated control system is turned on, it wakes up its related control unit which, in turn, wakes up the other units. After confirming the sleep mode, look in the following table for the switch most related to the problem. Operate that switch and see if its control unit wakes up.

   NOTE: If any control unit is faulty and will not wake up, several circuits in the system will malfunction at the same time. In the table below, the control unit is followed by a list of the switches and input signals that can wake it up.

| |
|---|
| Door switches (door open) |
| Driver's door lock switch (LOCK or UNLOCK) |
| Driver's door lock knob switch (LOCK or UNLOCK) |
| Driver's door key cylinder switch (LOCK or UNLOCK) |
| Front passenger's door lock switch (LOCK or UNLOCK) |
| Front passenger's door lock knob switch (LOCK or UNLOCK) |
| Left rear door lock knob switch |
| Right rear door lock knob switch |
| Tailgate latch switch (Tailgate open) |
| Hood switch (hood open) |
| Hazard warning switch (ON) |
| Combination light switch (Parking, Headlight, Dimmer, Passing ON) |
| Ignition key switch (key inserted) |

Protected by AR

# Multiplex Integrated Control System

## Circuit Diagram

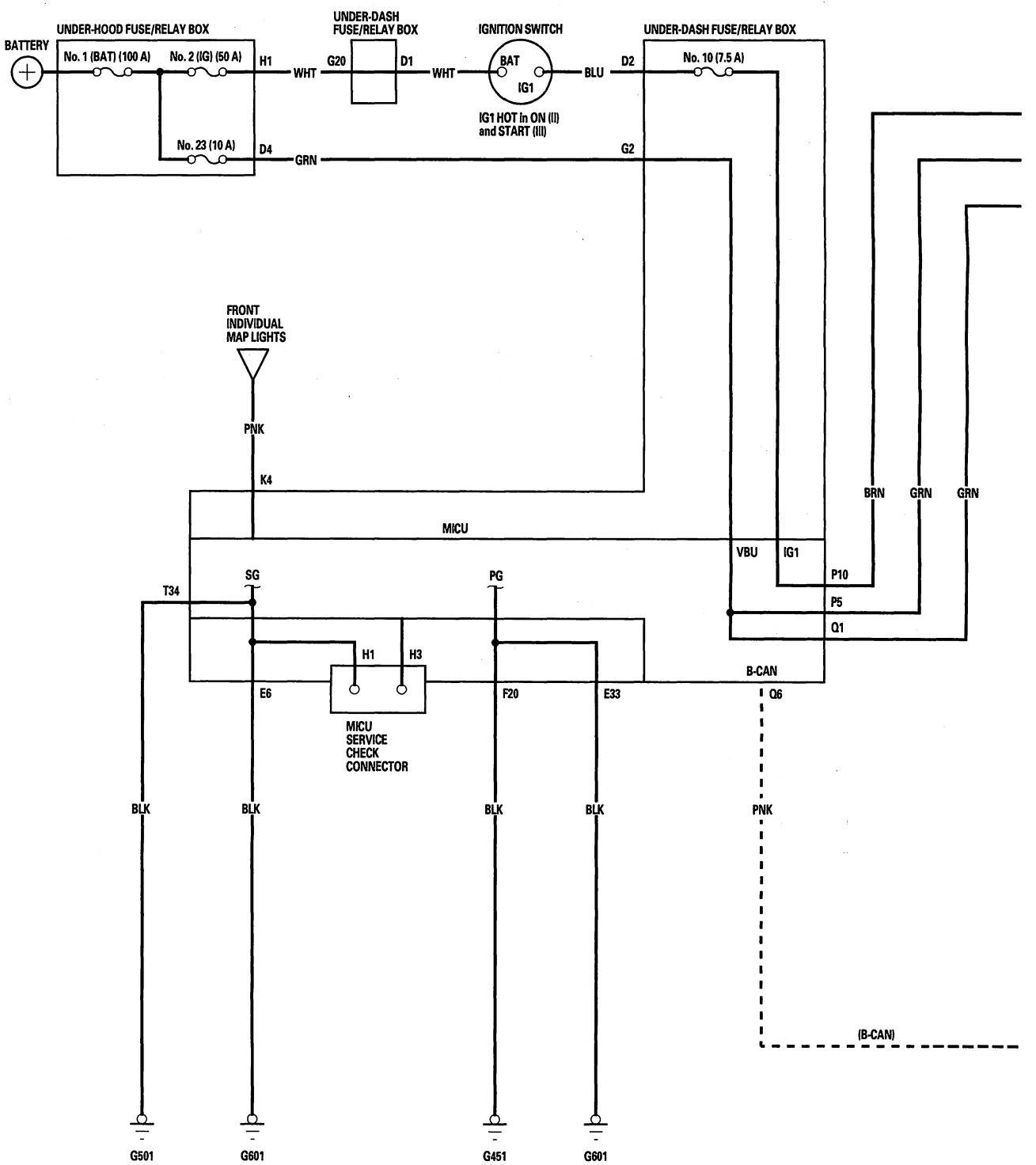




BACK

Protected by AR



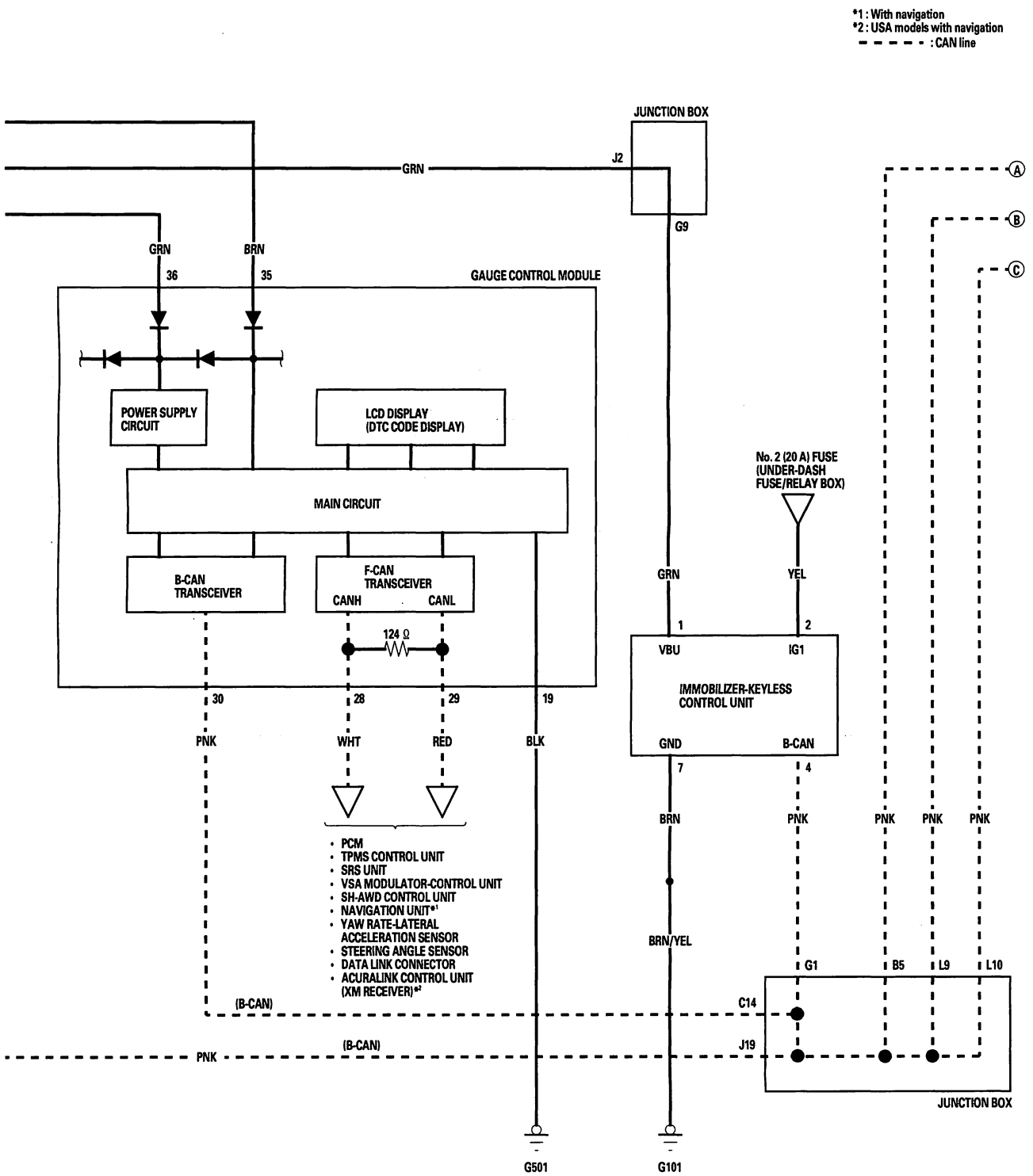


(cont'd)

Protected by AR



## Circuit Diagram (cont'd)

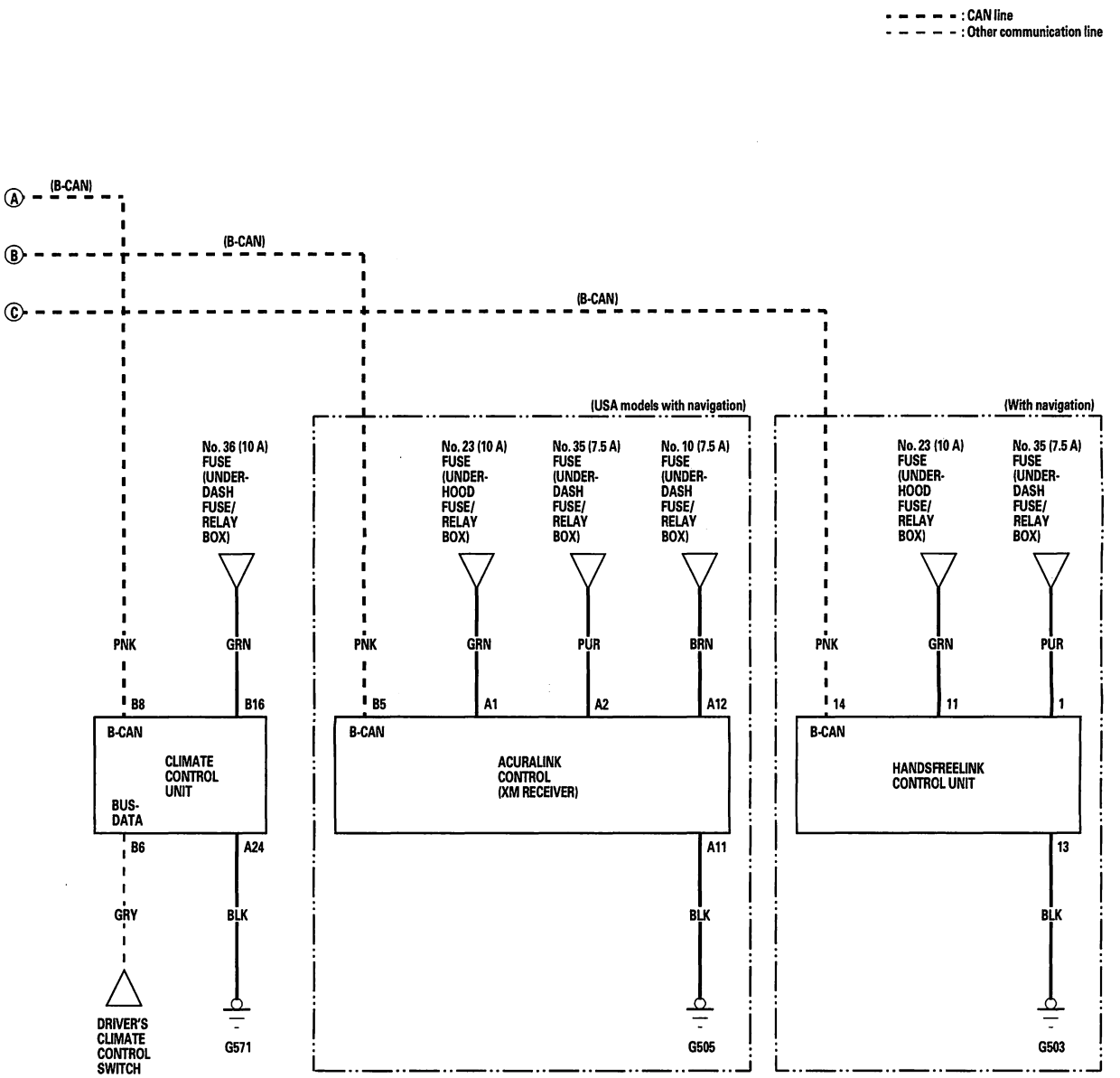




BACK

Protected by AR



## DTC Troubleshooting

### DTC B1000: Communication Bus Line Error (BUS-OFF)

NOTE: If you are troubleshooting multiple DTCs, be sure to follow the instructions in B-CAN System Diagnosis Test Mode A (see page 22-88).

1. Clear the DTCs with the HDS.
2. Turn the ignition switch OFF, and then back ON (II).
3. Wait for 6 seconds or more.
4. Check for DTCs with the HDS.

   *Is DTC B1000 indicated?*
   **YES**—Go to step 5.
   **NO**—Intermittent failure. The communication bus line is OK at this time. Check for loose or poor connections, or worn/shorted wires. If the connections are good, check the battery condition (see page 22-63) and the charging system. ■

5. Check for DTCs with the HDS.

   *Are DTCs B1008, B1011, and B1032 also indicated with DTC B1000?*
   **YES**—Go to step 6.
   **NO**—Faulty MICU; replace the under-dash fuse/relay box. ■

6. Turn the ignition switch OFF.
7. Disconnect the appropriate connector at each control unit in the table one at a time. Clear the DTCs, then recheck for DTCs after each unit is disconnected.

| Control Unit | Appropriate Connector |
|---|---|
| Gauge control module | 36P connector |
| Immobilizer-keyless control unit | 7P connector |
| Climate control unit | Connector B (16P) |
| AcuraLink control unit | Connector B (16P) |
| HandsFreeLink control unit | 22P connector |

   *Is DTC B1000 indicated with each individual unit disconnected?*
   **YES**—Go to step 8.
   **NO**—Replace the control unit that was disconnected and B1000 did not reset. ■

8. Disconnect the under-dash fuse/relay box connector Q (16P).
9. Check for continuity between the under-dash fuse/relay box connector Q (16P) No. 6 terminal and body ground.

**UNDER-DASH FUSE/RELAY BOX CONNECTOR Q (16P)**

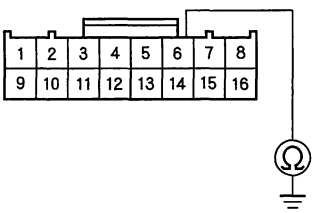


Wire side of female terminals

   *Is there continuity?*

   **YES**—Repair the short to ground in the wire. ■

   **NO**—Go to step 10.

10. Turn the ignition switch ON (II).
11. Check for voltage between the under-dash fuse/relay box connector Q (16P) No. 6 terminal and body ground.

**UNDER-DASH FUSE/RELAY BOX CONNECTOR Q (16P)**

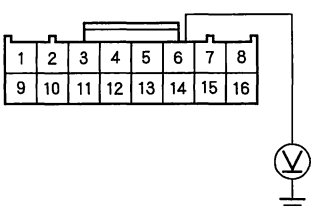


Wire side of female terminals

   *Is there voltage?*

   **YES**—Repair the short to power in the wire between the under-dash fuse/relay box connector, the junction box, and the affected control unit. ■

   **NO**—Faulty MICU; replace the under-dash fuse/relay box. ■

Protected by AR



## DTC Troubleshooting (cont'd)

### **DTC B1001:** MICU Internal Error (CPU Error)

NOTE: If you are troubleshooting multiple DTCs, be sure to follow the instructions in B-CAN System Diagnosis Test Mode A (see page 22-88).

1. Clear the DTCs with the HDS.
2. Turn the ignition switch OFF, and then back ON (II).
3. Wait for 6 seconds or more.
4. Check for DTCs with the HDS.

   *Is DTC B1001 indicated?*

   **YES**—Faulty MICU; replace the under-dash fuse/relay box.■

   **NO**—Intermittent failure, the MICU is OK at this time. Check for loose or poor connections. If the connections are good, check the battery condition (see page 22-63) and the charging system.■

### **DTC B1002:** MICU Internal Error (EEPROM Error)

NOTE: If you are troubleshooting multiple DTCs, be sure to follow the instructions in B-CAN System Diagnosis Test Mode A (see page 22-88).

1. Clear the DTCs with the HDS.
2. Turn the ignition switch OFF, and then back ON (II).
3. Wait for 6 seconds or more.
4. Check for DTCs with the HDS.

   *Is DTC B1002 indicated?*

   **YES**—Faulty MICU; replace the under-dash fuse/relay box.■

   **NO**—Intermittent failure, the MICU is OK at this time. Check for loose or poor connections. If the connections are good, check the battery condition (see page 22-63) and the charging system.■



BACK

Protected by AR



## **DTC B1008:** MICU Lost Communication with Gauge Control Module (A/T Message)

NOTE: If you are troubleshooting multiple DTCs, be sure to follow the instructions in B-CAN System Diagnosis Test Mode A (see page 22-88).

1. Clear the DTCs with the HDS.
2. Turn the ignition switch OFF, and then back ON (II).
3. Wait for 6 seconds or more.
4. Check for DTCs with the HDS.

   *Is DTC B1008 indicated?*

   **YES**—Go to step 5.

   **NO**—Intermittent failure, the gauge control module is OK at this time. Check for loose or poor connections at gauge control module 36P connector and at the under-dash fuse/relay box connector Q (16P). If the connections are good, check the battery condition (see page 22-63) and the charging system. ■

5. Check for DTCs with the HDS.

   *Are DTCs B1011 and B1032 also indicated with DTC B1008?*

   **YES**—Check for an open in the communication circuit between the MICU and the gauge control module. If the circuit is bad, repair the open. ■

   **NO**—Go to the gauge control module input test (see page 22-282). ■

## **DTC B1011:** MICU Lost Communication with Gauge Control Module (VSP/NE Message)

NOTE: If you are troubleshooting multiple DTCs, be sure to follow the instructions in B-CAN System Diagnosis Test Mode A (see page 22-88).

1. Clear the DTCs with the HDS.
2. Turn the ignition switch OFF, and then back ON (II).
3. Wait for 6 seconds or more.
4. Check for DTCs with the HDS.

   *Is DTC B1011 indicated?*

   **YES**—Go to step 5.

   **NO**—Intermittent failure, the gauge control module is OK at this time. Check for loose or poor connections at gauge control module 36P connector and at under-dash fuse/relay box connector Q (16P). If the connections are good, check the battery condition (see page 22-63) and the charging system. ■

5. Check for DTCs with the HDS.

   *Are DTCs B1008 and B1032 also indicated with DTC B1011?*

   **YES**—Check for an open in the communication circuit between the MICU and the gauge control module. If the circuit is bad, repair the open. ■

   **NO**—Go to the gauge control module input test (see page 22-282). ■

Protected by AR



## DTC Troubleshooting (cont'd)

### **DTC B1032:** MICU Lost Communication with the SRS Unit (CDS Message)

NOTE: If you are troubleshooting multiple DTCs, be sure to follow the instructions in B-CAN System Diagnosis Test Mode A (see page 22-88).

1. Clear the DTCs with the HDS.

2. Turn the ignition switch OFF, and then back ON (II).

3. Wait for 6 seconds or more.

4. Check for DTCs with the HDS.

   *Is DTC B1032 indicated?*

   **YES**—Go to step 5.

   **NO**—Intermittent failure, the gauge control module is OK at this time. Check for loose or poor connections at the gauge control module 36P connector, and at the under-dash fuse/relay box connector Q (16P). If the connections are good, check the battery condition (see page 22-63) and the charging system.■

5. Check for DTCs with the HDS.

   *Are DTCs B1008 and B1011 also indicated with DTC B1032?*

   **YES**—Check for an open in the communication circuit between the MICU and the gauge control module. If the circuit is bad, repair the open.■

   **NO**—Do the gauge control module input test (see page 22-282).■



BACK

Protected by AR



## DTC B1036: IG1 Line Input Error

NOTE: If you are troubleshooting multiple DTCs, be sure to follow the instructions in B-CAN System Diagnosis Test Mode A (see page 22-88).

1. Clear the DTCs with the HDS.
2. Turn the ignition switch OFF, and then back ON (II).
3. Wait for 6 seconds or more.
4. Check for DTCs with the HDS.

   *Is DTC B1036 indicated?*

   **YES**—Go to step 5.

   **NO**—Intermittent failure, the system is OK at this time. Check for loose or poor connection at the gauge control module 36P connector, and at the under-dash fuse/relay box connector Q (16P). If the connections are good, check the battery condition (see page 22-63) and the charging system. ■

5. Check for DTCs with the HDS.

   *Is DTC B1008 indicated with DTC B1036?*

   **YES**—Troubleshoot the indicated DTC. ■

   **NO**—Go to step 6.

6. Turn the ignition switch OFF.
7. Turn the ignition switch ON (II).
8. Check for voltage between the gauge control module 36P connector No. 35 and No. 19 terminals.

**GAUGE CONTROL MODULE 36P CONNECTOR**

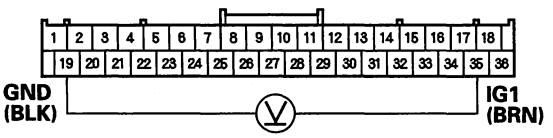


Wire side of female terminals

*Is there battery voltage?*

**YES**—Faulty MICU; substitute a known-good under-dash fuse/relay box and recheck. ■

**NO**—Check No. 10 (7.5 A) fuse in the under-dash fuse/relay box. If the fuse is OK, check for an open in the wire between the under-dash fuse/relay box and the gauge control module, or repair a short in the wire between the under-dash fuse/relay box and the gauge control module. ■

Protected by AR



## DTC Troubleshooting (cont'd)

### **DTC B1150:** Communication Bus Line Error (BUS-OFF)

NOTE: If you are troubleshooting multiple DTCs, be sure to follow the instructions in B-CAN System Diagnosis Test Mode A (see page 22-88).

1. Clear the DTCs with the HDS.
2. Turn the ignition switch OFF, and then back ON (II).
3. Wait for 6 seconds or more.
4. Check for DTCs with the HDS.

   *Are DTCs B1000, B1008, B1011, and B1032 also indicated with DTC B1150?*

   **YES**—Troubleshoot DTC B1000.■

   **NO**—If only DTC B1150 is present, replace the gauge control module assembly. If no DTCs are present, it's an intermittent failure, the system is OK at this time. Check for loose or poor connections at the gauge control module 36P connector, and at the under-dash fuse/relay box connector Q (16P).■

### **DTC B1200:** Communication Bus Line Error (BUS-OFF)

NOTE: If you are troubleshooting multiple DTCs, be sure to follow the instructions in B-CAN System Diagnosis Test Mode A (see page 22-88).

1. Clear the DTCs with the HDS.
2. Turn the ignition switch OFF, and then back ON (II).
3. Wait for 6 seconds or more.
4. Check for DTCs with the HDS.

   *Are DTCs B1000, B1008, B1011, and B1032 also indicated with DTC B1200?*

   **YES**—Troubleshoot DTC B1000.■

   **NO**—If only DTC B1200 is present, replace the climate control unit. If no DTCs are present, it's an intermittent failure, the system is OK at this time. Check for loose or poor connections at the climate control unit 24P connector, and at the under-dash fuse/relay box connector Q (16P).■



BACK

Protected by AR



## **DTC B1750:** Communication Bus Line Error (BUS-OFF)

NOTE: If you are troubleshooting multiple DTCs, be sure to follow the instructions in B-CAN System Diagnosis Test Mode A (see page 22-88).

1. Clear the DTCs with the HDS.
2. Turn the ignition switch OFF, and then back ON (II).
3. Wait for 6 seconds or more.
4. Check for DTCs with the HDS.

   *Are DTCs B1000, B1008, B1011, and B1032 also indicated?*

   **YES**—Troubleshoot DTC B1000 (see page 22-99). ■

   **NO**—If only DTC B1750 is present, replace the HandsFreeLink control unit. If no DTCs are present, it's an intermittent failure, the system is OK at this time. Check for loose or poor connections at the HandsFreeLink control unit 22P connector, and at the under-dash fuse/relay box connector Q (16P). ■

## **DTC B1900:** Communication Bus Line Error (BUS-OFF)

NOTE: If you are troubleshooting multiple DTCs, be sure to follow the instructions in B-CAN System Diagnosis Test Mode A (see page 22-88).

1. Clear the DTCs with the HDS.
2. Turn the ignition switch OFF, and then back ON (II).
3. Wait for 6 seconds or more.
4. Check for DTCs with the HDS.

   *Are DTCs B1000, B1008, B1011, and B1032 also indicated with DTC B1900?*

   **YES**—Troubleshoot DTC B1000. ■

   **NO**—If only DTC B1900 is present, replace the immobilizer-keyless control unit. If no DTCs are present, it's an intermittent failure, the system is OK at this time. Check for loose or poor connections at the immobilizer-keyless control unit 7P connector, and at the under-dash fuse/relay box connector Q (16P). ■

Protected by AR



## DTC Troubleshooting (cont'd)

### DTC B2200: B-CAN BUS OFF

NOTE: If you are troubleshooting multiple DTCs, be sure to follow the instructions in B-CAN System Diagnosis Test Mode A (see page 22-88).

1. Clear the DTCs using the HDS.
2. Turn the ignition switch OFF, and then back ON (II).
3. Start and run the engine for at least 5 seconds then turn the engine off.
4. Check for DTCs with the HDS.

   *Is DTCs B1000, B1008, B1011, and/or B1032 indicated?*

   **YES**—Troubleshoot DTC B1000.■

   **NO**—If only DTC B2200 is present, replace the AcuraLink control unit. Intermittent failure, B-CAN communication line is OK at this time. Check for loose or poor connections. If the connections are good, check the battery condition (see page 22-63), and the charging system.■



BACK

Protected by AR



## MICU Input Test

1. Before troubleshooting the multiplex integrated control system, troubleshoot the B-CAN System Diagnosis Test Mode A (see page 22-88).

2. Check the No. 10 (7.5 A) fuse in the under-dash fuse/relay box. If any fuse is blown, replace it and go to step 3.

3. Disconnect the under-dash fuse/relay box connectors E, F, G, K, and T.

   NOTE: All connector views are shown from wire side of female terminals.

**UNDER-DASH FUSE/RELAY BOX CONNECTOR E (42P)**

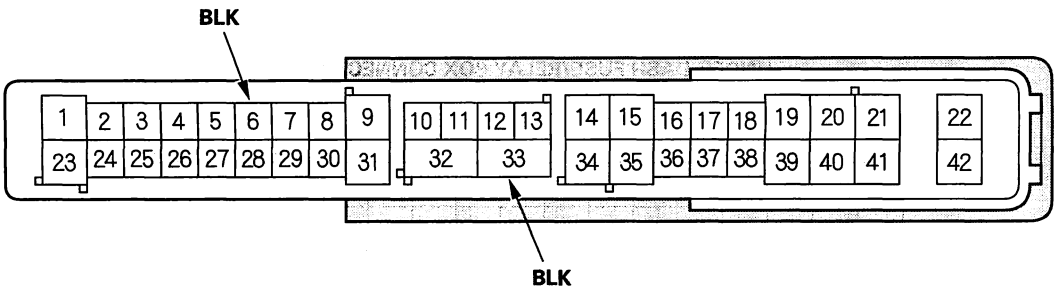


**UNDER-DASH FUSE/RELAY BOX CONNECTOR F (34P)**

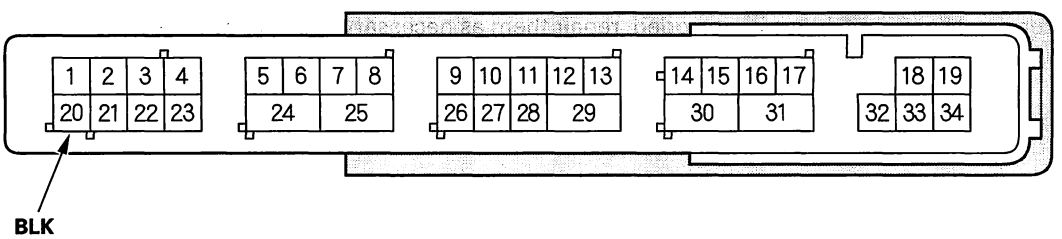


**UNDER-DASH FUSE/RELAY BOX CONNECTOR G (21P)**

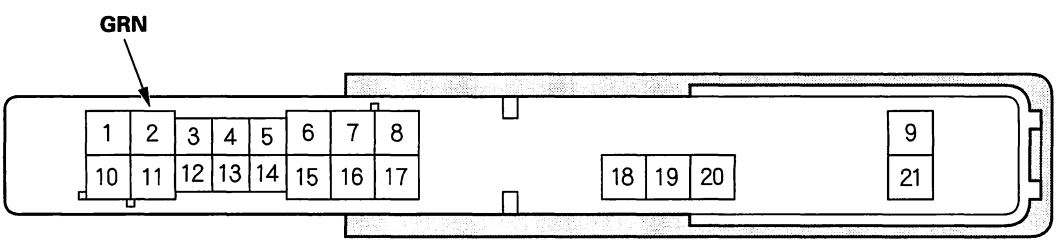


(cont'd)

Protected by AR



## MICU Input Test (cont'd)

**UNDER-DASH FUSE/RELAY BOX CONNECTOR K (8P)**

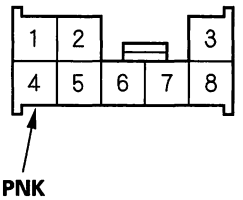


**UNDER-DASH FUSE/RELAY BOX CONNECTOR T (34P)**

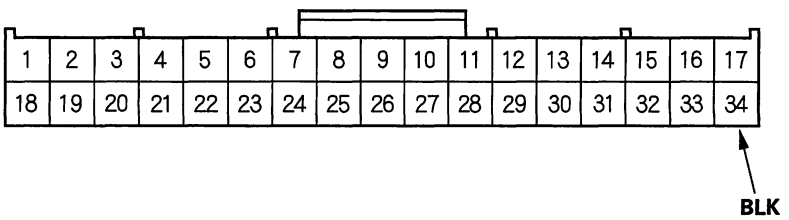


4. Inspect the connector and socket terminals to be sure they are all making good contact.

   - If the terminals are bent, loose or corroded, repair them as necessary and recheck the system.
   - If the terminals look OK, go to step 5.



BACK

Protected by AR



5. With the connector still disconnected, make these input tests at the appropriate connector.

- If any test indicates a problem, find and correct the cause, then recheck the system.
- If all the input tests prove OK, go to step 6.

| Cavity | Wire | Test condition | Test: Desired result | Possible cause if result is not obtained |
|---|---|---|---|---|
| K4 | PNK | Under all conditions | Attach to ground:<br>The ceiling light should come on. | • Blown No. 22 (7.5 A) fuse in the under-hood fuse/relay box<br>• Blown bulb(s)<br>• Faulty ceiling light<br>• An open in the wire |

6. Reconnect the connectors to the under-dash fuse/relay box, and make these input tests at the connectors.

- If any test indicates a problem, find and correct the cause, then recheck the system.
- If all the input tests prove OK, the MICU must be faulty; replace the under-dash fuse/relay box.

| Cavity | Wire | Test condition | Test: Desired result | Possible cause if result is not obtained |
|---|---|---|---|---|
| G2 | GRN | Under all conditions | Check for voltage to ground:<br>There should be battery voltage. | • Blown No. 23 (10 A) fuse in the under-hood fuse/relay box<br>• An open in the wire |
| E6 | BLK | Under all conditions | Check for voltage to ground:<br>There should be less than 0.5 V. | • Poor ground (G601)<br>• An open in the wire |
| E33 | BLK | Under all conditions | Check for voltage to ground:<br>There should be less than 0.5 V. | • Poor ground (G601)<br>• An open in the wire |
| F20 | BLK | Under all conditions | Check for voltage to ground:<br>There should be less than 0.5 V. | • Poor ground (G451)<br>• An open in the wire |
| T34 | BLK | Under all conditions | Check for voltage to ground:<br>There should be less than 0.5 V. | • Poor ground (G501)<br>• An open in the wire |

Protected by AR



## Component Location Index

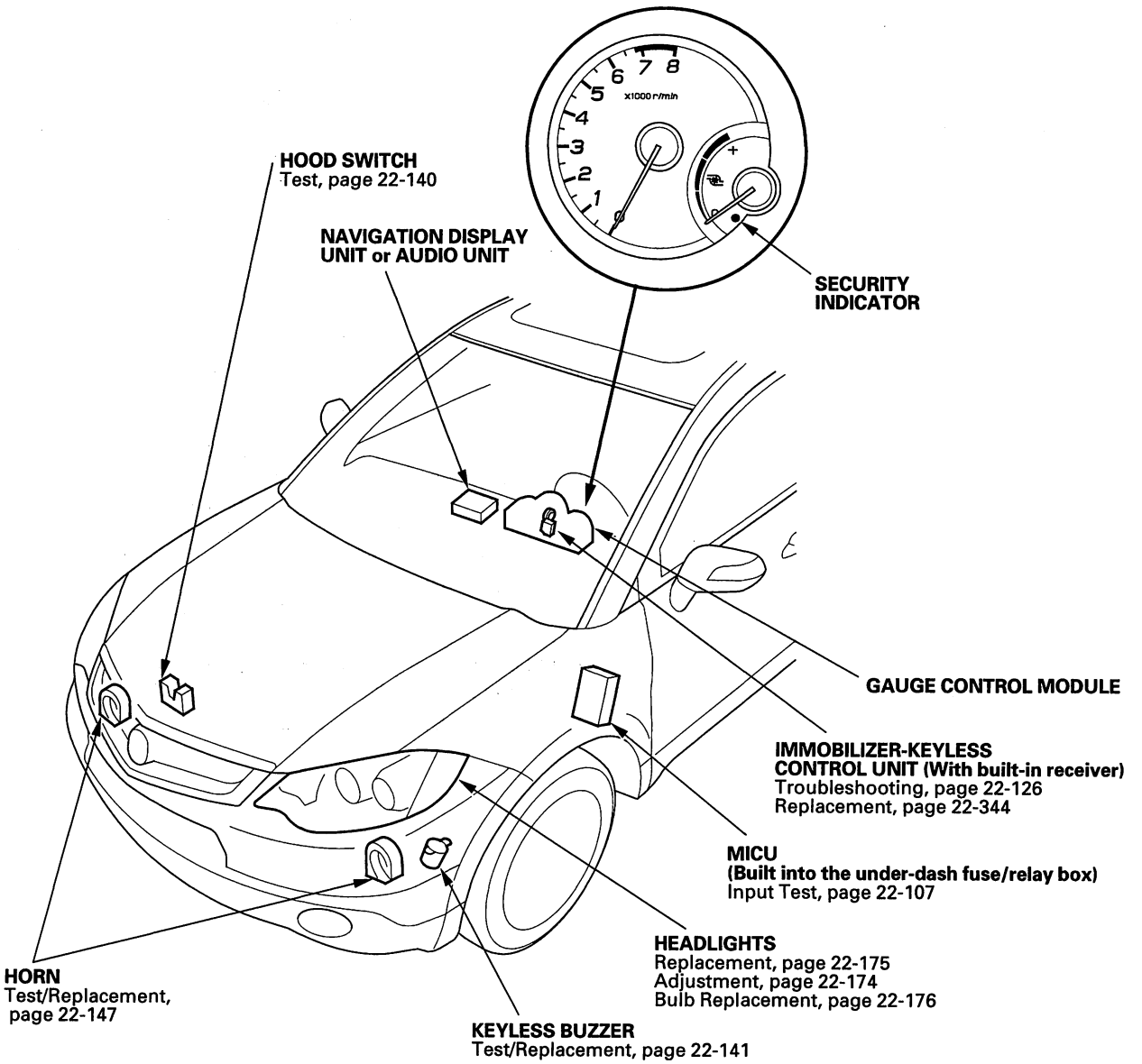


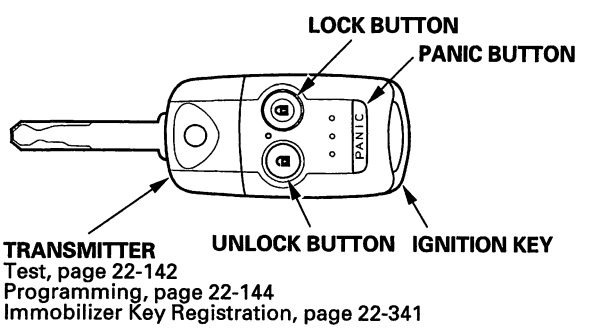




BACK

Protected by AR



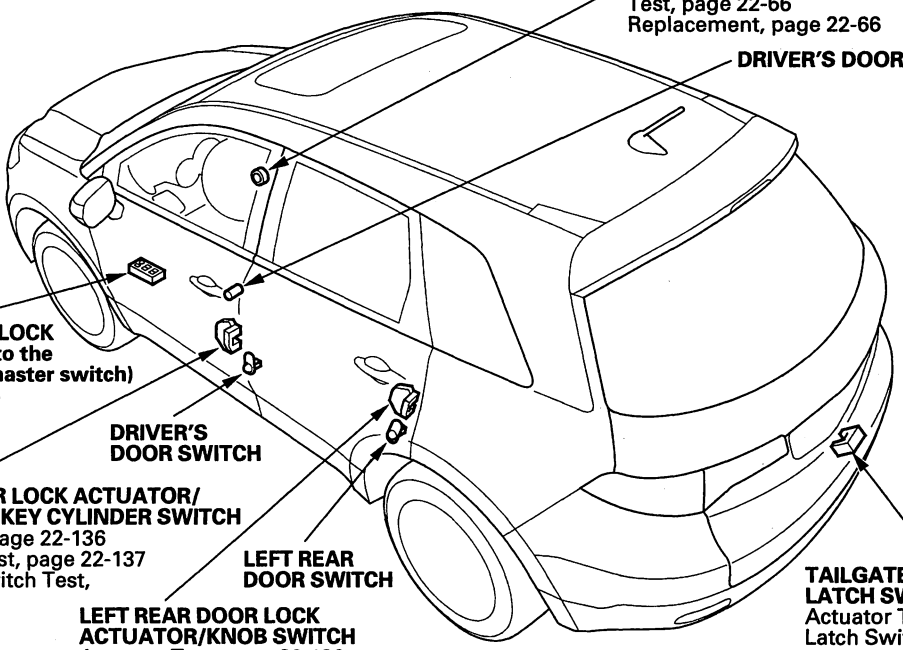


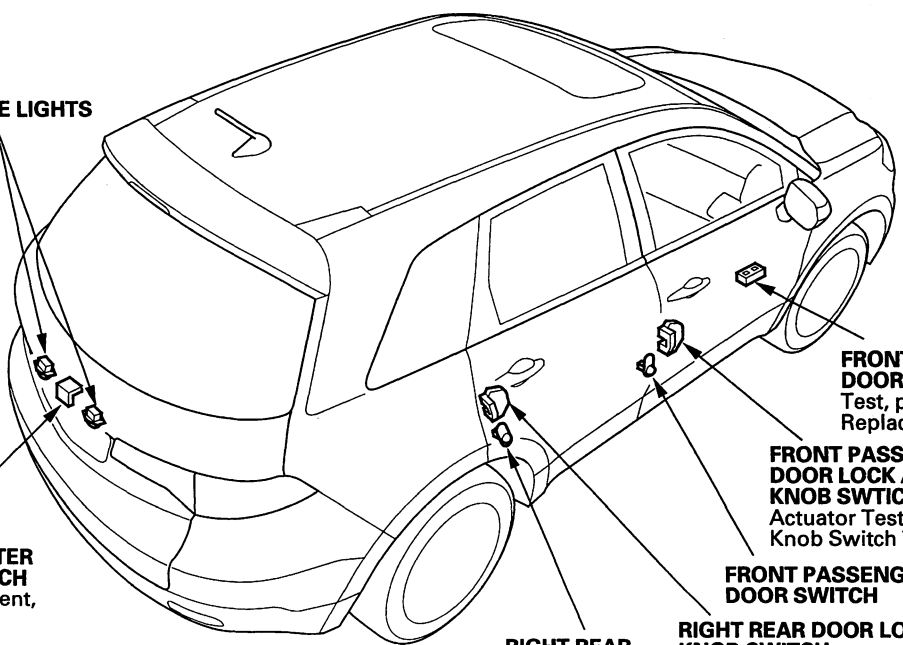

Protected by AR



## System Description

### Security Alarm System

The security alarm system is armed automatically after the doors, hood, and tailgate are closed and locked. For the system to arm, the ignition switch must be off, the key must be removed from the ignition switch, and the MICU must receive signals that the doors, hood, and tailgate are closed and locked. The alarm can be disarmed at any time by unlocking the driver's door with the key or pressing the UNLOCK button on the transmitter.

When everything is closed and locked, the only inputs that are grounded, and have 0 V, are the driver's door lock knob switch (LOCK position), and the audio unit or navigation unit (if equipped). In other words, all of the other switches are open, and have about 10 to 12 V, including the key cylinder switches. The security indicator in the gauge control module begins to flash immediately after the vehicle is completely closed and locked, and 15 seconds later, the security system arms (blink rate changes from slow to fast). If the security indicator does not flash, the system is not arming. A beep sounds and the parking lights flash to confirm the security alarm system is armed if the LOCK button is pressed a second time within 5 seconds.

If one of the switches is misadjusted or shorted internally, or there is a short or an open in the circuit, the security system will not arm. As long as the control unit continues to receive a ground signal (0 V, or open to 12 V depending on the circuit), it senses that the vehicle is not closed and locked, and the system will not arm. A switch that is slightly misadjusted can cause the alarm to sound for no apparent reason. In this case, a significant change in outside air temperature, the vibration of a passing truck, or someone bumping into the vehicle could cause the alarm to sound. There is no glass breakage or motion detector feature.

If anything is opened or improperly unlocked after the system is armed, the control unit receives a ground signal from that switch, and the 10 to 12 V reference drops to 0 V. If the audio unit or navigation unit (if equipped) is disconnected, the input loses its ground, and the input voltage goes to 10 to 12 V. The system sounds the alarm when any of these occur:

- A door or the tailgate is forced open.
- A door is unlocked without using the key or the transmitter.
- The hood is opened.
- The audio unit or navigation unit (if equipped) is disconnected.
- The transmitter PANIC button is pressed.

When the system sounds the alarm, the horn sounds and the exterior lights flash for 2 minutes. The alarm can be stopped at any time by unlocking the driver's door with the key or by pressing any button on the transmitter.

### Panic Mode

The panic mode sounds the alarm in order to attract attention. When the PANIC button on the transmitter is pressed and held for 2 seconds, the horn sounds and the exterior lights flash for about 20 seconds.

The panic mode can be cancelled at anytime by pressing any button on the transmitter or by turning the ignition switch ON (II). The panic mode will not function if the ignition switch is ON (II).



BACK

Protected by AR



## Keyless Entry System

The keyless entry system is integrated with the multiplex integrated control system. The multiplex integrated control unit (MICU) receives LOCK, UNLOCK and PANIC signals from the immobilizer-keyless control unit (keyless receiver).

The keyless entry system allows you to lock and unlock the vehicle with the transmitter. When you press the LOCK button, all doors lock. When you press the UNLOCK button once, only the driver's door unlocks. The other doors will unlock when you press the button a second time. The doors will not lock with the transmitter if a door is not fully closed, or if the key is in the ignition switch.

When the switch for the ceiling light is in the center (DOOR) position, it will come on when the UNLOCK button is pressed. If a door is not opened, the light will go off in about 15 to 60 seconds, (depending on the customized selections), and the door will relock in about 30 to 90 seconds (depending on the customized selections). If the doors are not locked will the remote, the light will go off immediately.

Protected by AR

# Keyless/Power Door Locks/Security System

## Circuit Diagram

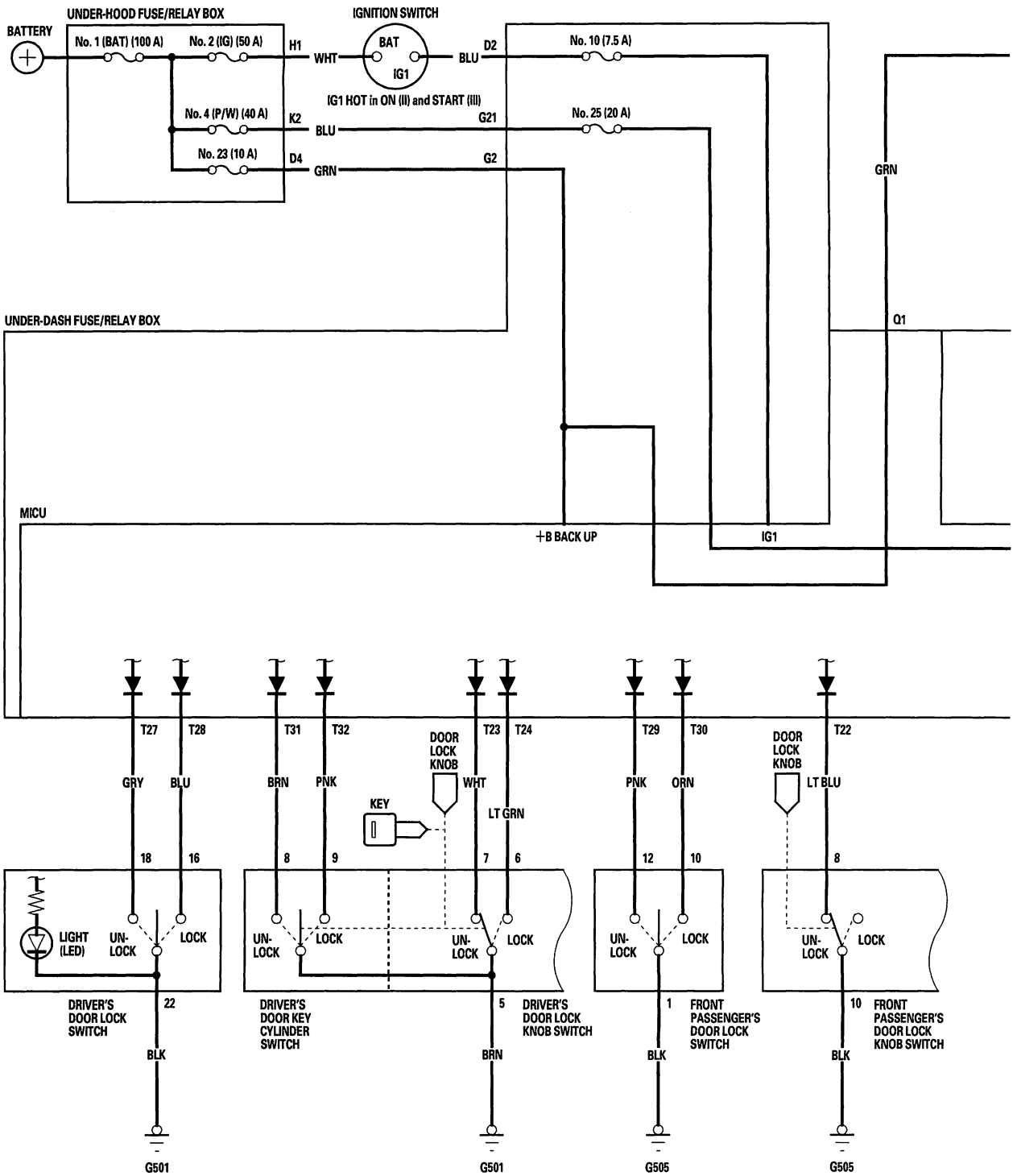




BACK

Protected by AR



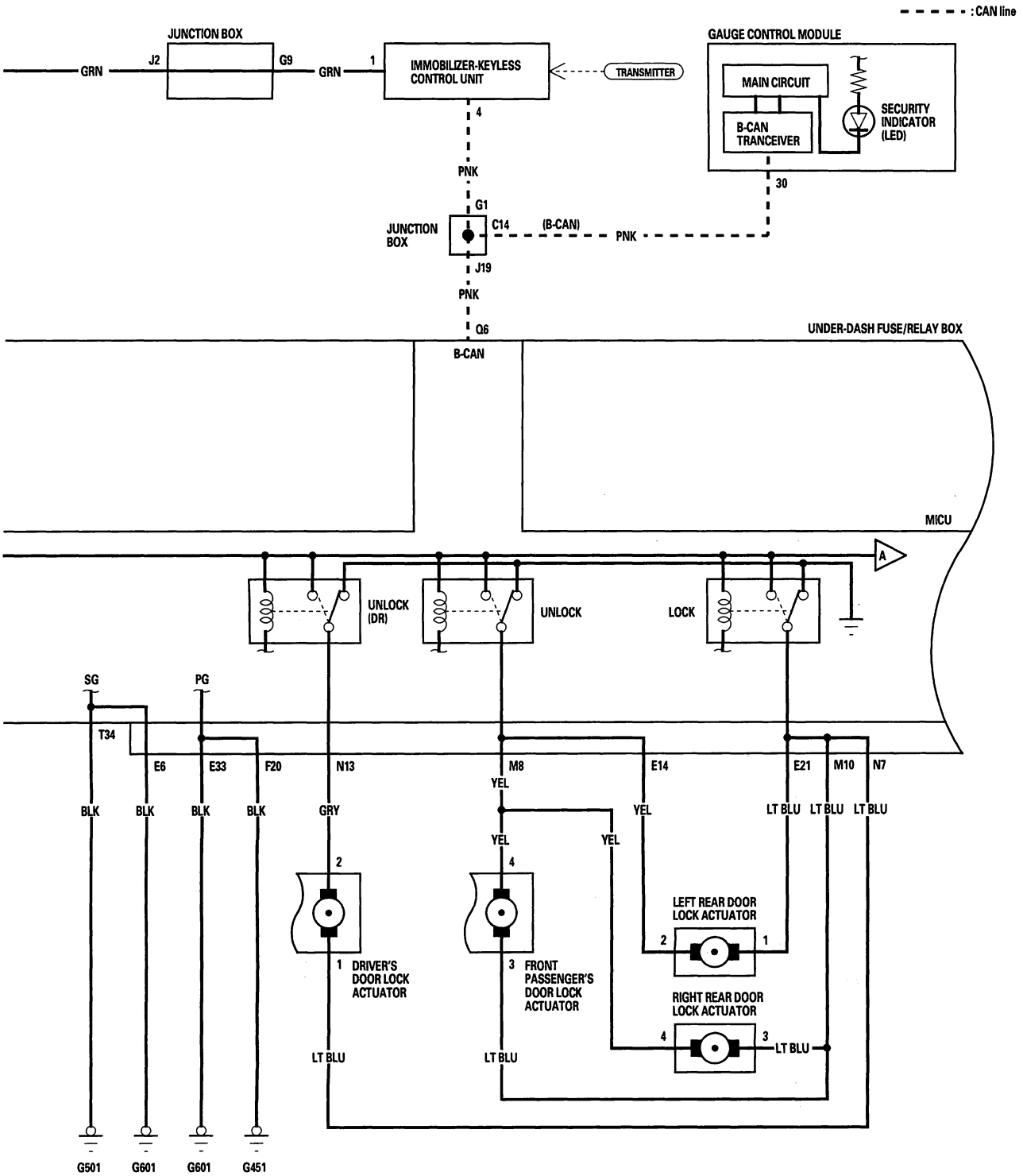


(cont'd)

BACK

Protected by AR

# Keyless/Power Door Locks/Security System

## Circuit Diagram (cont'd)

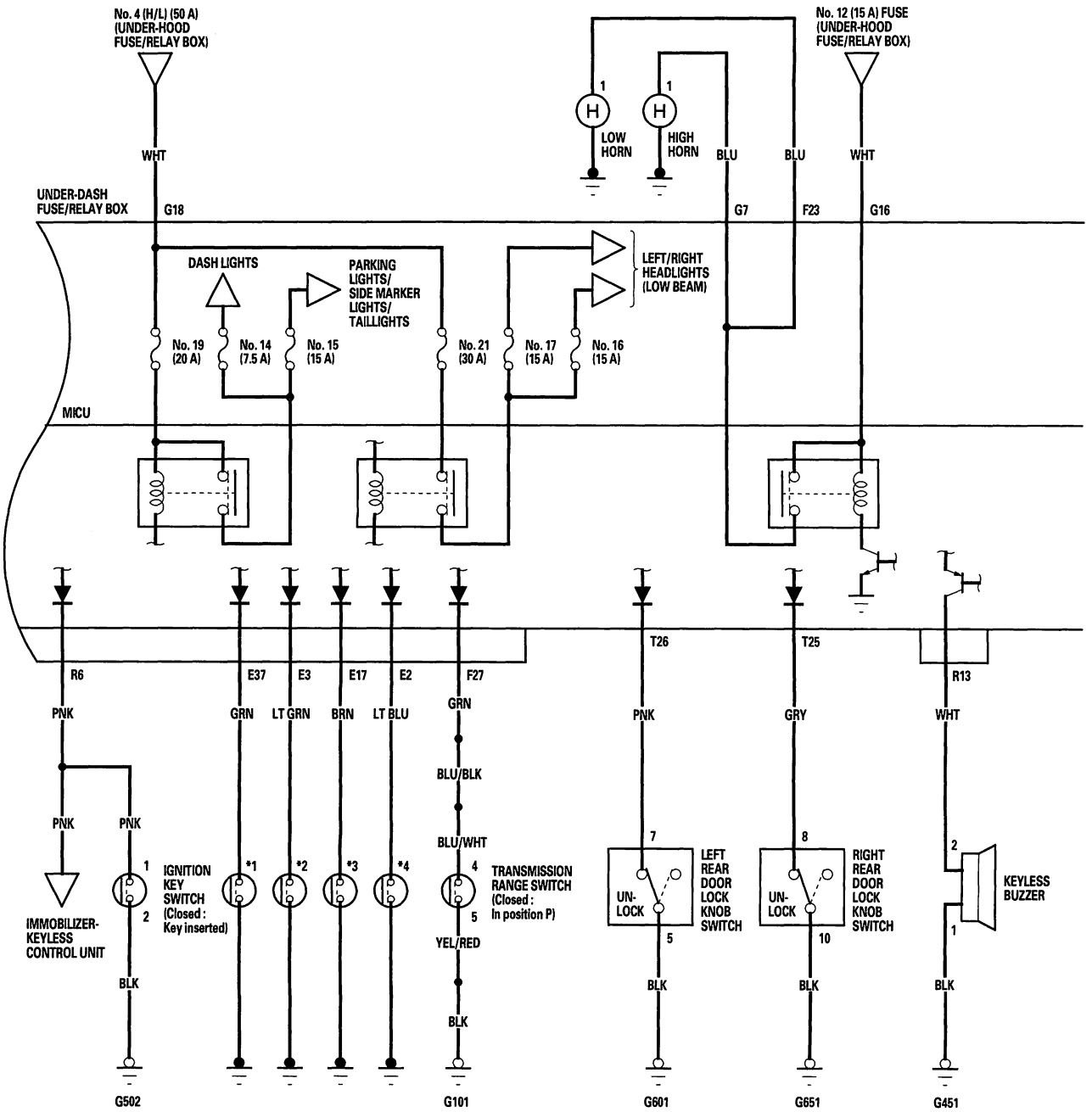




BACK

Protected by AR



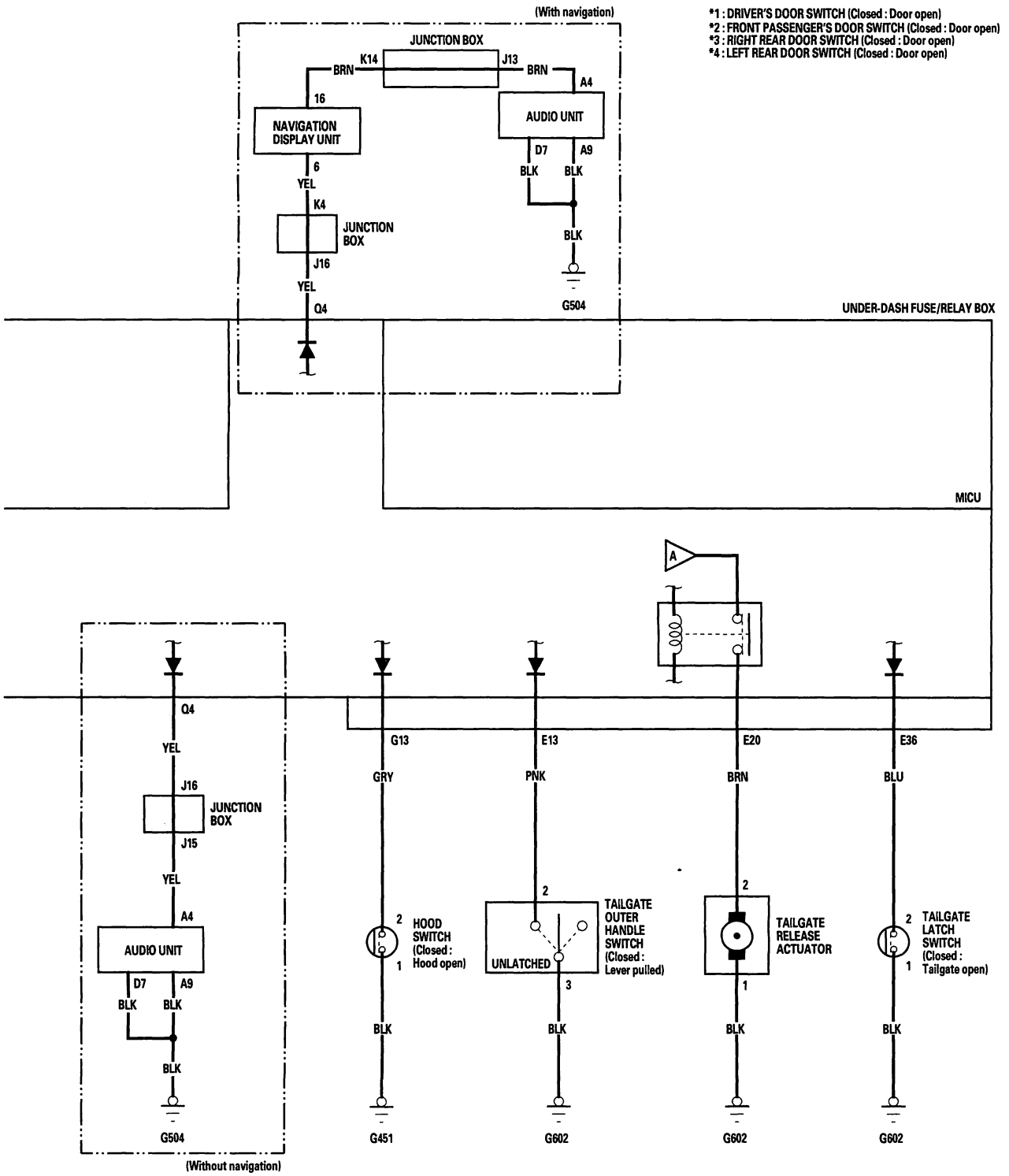


BACK

Protected by AR



## DTC Troubleshooting

### **DTC B1026:** Front Passenger's Door Lock Switch Lock/Unlock Signal Error

NOTE: If you are troubleshooting multiple DTCs, be sure to follow the instructions in B-CAN System Diagnosis Test Mode A (see page 22-88).

1. Clear the DTCs with the HDS.
2. Turn the ignition switch OFF, and then back ON (II).
3. Operate the front passenger's door lock switch several times.
4. Check for DTCs with the HDS.

   *Is DTC B1026 indicated?*

   **YES**—Go to step 5.

   **NO**—Intermittent failure. The front passenger's door lock system is OK at this time.■

5. With the front passenger's door lock switch in the neutral position, select KEYLESS from the HDS and enter the DATA LIST.
6. Check the ON/OFF information of the FRONT PASSENGER'S DOOR LOCK SWITCH (LOCK) and FRONT PASSENGER'S DOOR LOCK SWITCH (UNLOCK) in the DATA LIST.

   *Are both information indicators OFF?*

   **YES**—Go to step 12.

   **NO**—Go to step 7.

7. Disconnect the front passenger's power window switch 8P connector.
8. Check the ON/OFF information of the FRONT PASSENGER'S DOOR LOCK SWITCH (LOCK) and FRONT PASSENGER'S DOOR LOCK SWITCH (UNLOCK) in the DATA LIST.

   *Are both information indicators OFF?*

   **YES**—Faulty door lock switch; replace the front passenger's power window switch.■

   **NO**—Go to step 9.

9. Turn the ignition switch OFF.
10. Disconnect the under-dash fuse/relay box connector T (34P).
11. Check for continuity between the No. 12 (UNLOCK) and No. 10 (LOCK) terminals of the front passenger's power window switch 14P connector and body ground.

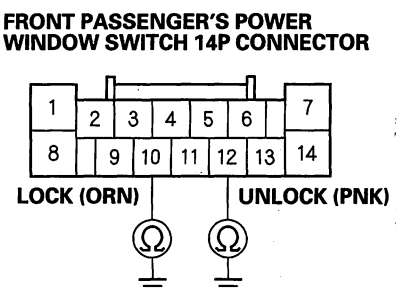


Wire side of female terminals

*Is there continuity?*

**YES**—Repair a short to ground in the LOCK or UNLOCK wire.■

**NO**—Faulty MICU; replace the under-dash fuse/relay box.■



BACK

Protected by AR



12. Turn the ignition switch OFF.

13. Disconnect the front passenger's window switch 14P connector.

14. Disconnect under-dash fuse/relay box connector T (34P).

15. Check for continuity between the No. 12 (UNLOCK) and No. 10 (LOCK) terminals of the front passenger's power window switch 14P connector.

**FRONT PASSENGER'S POWER WINDOW SWITCH 14P CONNECTOR**

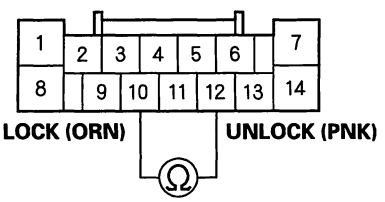


Wire side of female terminals

*Is there continuity?*

**YES**—Repair a short in the wire between the LOCK and UNLOCK wires. ■

**NO**—Substitute a known-good passenger's window switch, and recheck. If the symptom/indication goes away, replace the original passenger's window switch. If not, the MICU is faulty, replace the under-dash fuse/relay box. ■

Protected by AR



## DTC Troubleshooting (cont'd)

### DTC B1127: Driver's Door Key Cylinder Switch Signal Error

NOTE: If you are troubleshooting multiple DTCs, be sure to follow the instructions in B-CAN System Diagnosis Test Mode A (see page 22-88).

1. Clear the DTCs with the HDS.
2. Turn the ignition switch OFF, and then back ON (II).
3. Insert the ignition key into the driver's door key cylinder switch, and turn the key in LOCK and UNLOCK positions ten times.
4. Check for DTCs with the HDS.

   *Is DTC B1127 indicated?*

   **YES**—Go to step 5.

   **NO**—Intermittent failure. The driver's door key cylinder switch system is OK at this time.■

5. With the driver's door key cylinder in the neutral position, select KEYLESS with the HDS, and enter the DATA LIST.
6. Check the ON/OFF information of the DRIVER'S DOOR KEY CYLINDER SWITCH (LOCK) and DRIVER'S DOOR KEY CYLINDER SWITCH (UNLOCK) in the DATA LIST.

   *Are both information indicators OFF?*

   **YES**—Go to step 12.

   **NO**—Go to step 7.

7. Disconnect the driver's door lock actuator 10P connector.
8. Check the ON/OFF information of the DRIVER'S DOOR KEY CYLINDER SWITCH (LOCK) and DRIVER'S DOOR KEY CYLINDER SWITCH (UNLOCK) in the DATA LIST.

   *Are both information indicators OFF?*

   **YES**—Faulty driver's door key cylinder switch; replace the driver's door lock actuator.■

   **NO**—Go to step 9.

9. Turn the ignition switch OFF.
10. Disconnect the under-dash fuse/relay box connector T (34P).
11. Check for continuity between the No. 31 (UNLOCK) and No. 32 (LOCK) terminals of the under-dash fuse/relay box connector T (34P) and body ground.

**UNDER-DASH FUSE/RELAY BOX CONNECTOR T (34P)**

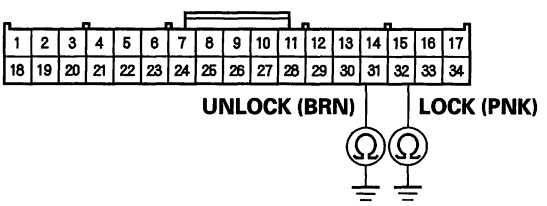


Wire side of female terminals

*Is there continuity?*

**YES**—Repair a short to ground in LOCK or UNLOCK wire.■

**NO**—Faulty MICU; replace the under-dash fuse/relay box.■

12. Turn the ignition switch OFF.
13. Disconnect the driver's door lock actuator 10P connector.
14. Disconnect under-dash fuse/relay box connector T (34P).



BACK

Protected by AR



15. Check for continuity between the No. 31 (UNLOCK) and No. 32 (LOCK) terminals of the under-dash fuse/relay box connector T (34P).

**UNDER-DASH FUSE/RELAY BOX CONNECTOR T (34P)**

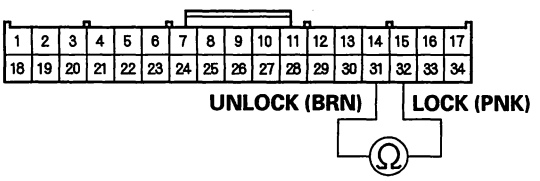


Wire side of female terminals

*Is there continuity?*

**YES**—Repair a short in the wire between the LOCK and UNLOCK wires. ■

**NO**—Substitute a known-good MICU, and recheck. If the symptom/indication goes away, replace the original MICU, if not, replace the driver's door lock actuator. ■

BACK

Protected by AR



## DTC Troubleshooting (cont'd)

### DTC B1128: Driver's Door Lock Switch Signal Error

NOTE: If you are troubleshooting multiple DTCs, be sure to follow the instructions in B-CAN System Diagnosis Test Mode A (see page 22-88).

1. Clear the DTCs with the HDS.
2. Turn the ignition switch OFF, and then back ON (II).
3. Operate the driver's door lock switch LOCK/UNLOCK several times.
4. Check for DTCs with the HDS.

   *Is DTC B1128 indicated?*

   **YES**—Go to step 5.

   **NO**—Intermittent failure. The driver's door lock system is OK at this time. ■

5. With the driver's door lock switch in the neutral position, select KEYLESS from the HDS and enter the DATA LIST.
6. Check the ON/OFF information of the DRIVER'S DOOR LOCK SWITCH (LOCK) and DRIVER'S DOOR LOCK SWITCH (UNLOCK) in the DATA LIST.

   *Are both information indicators OFF?*

   **YES**—Go to step 12.

   **NO**—Go to step 7.

7. Disconnect the power window master switch 22P connector.
8. Check the ON/OFF information of the DRIVER'S DOOR LOCK SWITCH (LOCK) and DRIVER'S DOOR LOCK SWITCH (UNLOCK) in the DATA LIST.

   *Are both information indicators OFF?*

   **YES**—Faulty door lock switch; replace the power window master switch. ■

   **NO**—Go to step 9.

9. Turn the ignition switch OFF.
10. Disconnect the under-dash fuse/relay box connector T (34P).
11. Check for continuity between the No. 28 (LOCK) and No. 27 (UNLOCK) terminals of the under-dash fuse/relay box connector T (34P) and body ground.

**UNDER-DASH FUSE/RELAY BOX CONNECTOR T (34P)**

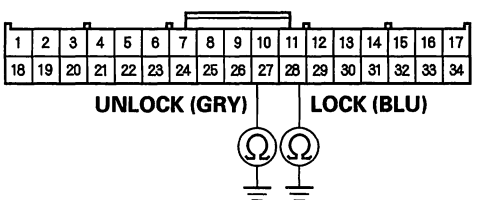


Wire side of female terminals

*Are there continuity?*

**YES**—Repair a short to ground in the LOCK or UNLOCK wire. ■

**NO**—Faulty MICU; replace the under-dash fuse/relay box. ■



BACK

Protected by AR



12. Turn the ignition switch OFF.

13. Disconnect the power window master switch 22P connector.

14. Disconnect under-dash fuse/relay box connector T (34P).

15. Check for continuity between the No. 28 (LOCK) and No. 27 (UNLOCK) terminals of the under-dash fuse/relay box connector T (34P).

**UNDER-DASH FUSE/RELAY BOX CONNECTOR T (34P)**

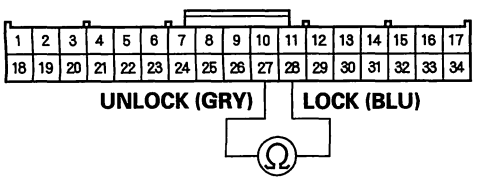


Wire side of female terminals

*Is there continuity?*

**YES**—Repair a short in the wire between the LOCK and UNLOCK wires. ■

**NO**—Substitute a known-good power window master switch, and recheck. If the symptom/indication goes away, replace the orignal power window master switch. If not, the MICU is faulty, replace the under-dash fuse/relay box. ■

Protected by AR



## DTC Troubleshooting (cont'd)

### DTC B1129: Driver's Door Lock Knob Switch Signal Error

NOTE: If you are troubleshooting multiple DTCs, be sure to follow the instructions in B-CAN System Diagnosis Test Mode A (see page 22-88).

1. Clear the DTCs with the HDS.
2. Turn the ignition switch OFF, and then back ON (II).
3. Operate the driver's door lock knob switch several times.
4. Check for DTCs with the HDS.

   *Is DTC B1129 indicated?*

   **YES**—Go to step 5.

   **NO**—Intermittent failure. The driver's door lock knob switch system is OK at this time.■

5. Select KEYLESS from the BODY ELECTRICAL menu, and enter the DATA LIST.
6. Check the ON/OFF information of the DRIVER'S DOOR LOCK KNOB SWITCH (LOCK) and the DRIVER'S DOOR LOCK KNOB SWITCH (UNLOCK).

   *Are the DRIVER'S DOOR LOCK KNOB SWITCH (LOCK) information indicator ON and DRIVER'S DOOR LOCK KNOB SWITCH (UNLOCK) information indicator OFF with the driver's door lock knob switch in LOCK position, and are the DRIVER'S DOOR LOCK KNOB SWITCH (LOCK) information indicator OFF and DRIVER'S DOOR LOCK KNOB SWITCH (UNLOCK) information indicator ON with the driver's door lock knob switch in UNLOCK position?*

   **YES**—Faulty MICU; replace the under-dash fuse/relay box.■

   **NO**—Go to step 7.

7. Disconnect the driver's door lock actuator 10P connector.
8. Check the ON/OFF information of the DRIVER'S DOOR LOCK KNOB SWITCH (LOCK) and DRIVER'S DOOR LOCK KNOB SWITCH (UNLOCK) in the DATA LIST.

   *Are both information indicators OFF?*

   **YES**—Check for an open in the driver's door lock knob switch (LOCK) wire or the driver's door lock knob switch (UNLOCK) wire between the MICU and the driver's door lock knob switch. If OK, replace the driver's door lock actuator.■

   **NO**—Go to step 9.

9. Turn the ignition switch OFF.
10. Disconnect the under-dash fuse/relay box connector T (34P).
11. Check for continuity between the No. 23 (UNLOCK) and No. 24 (LOCK) terminals of the under-dash fuse/relay box connector T (34P) and body ground.

**UNDER-DASH FUSE/RELAY BOX CONNECTOR T (34P)**

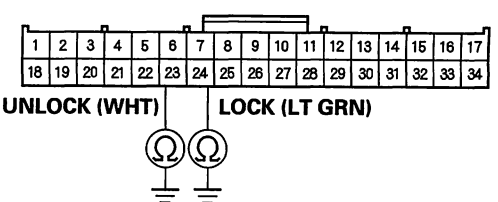


Wire side of female terminals

*Is there continuity?*

**YES**—Repair a short to ground in the LOCK or UNLOCK wire.■

**NO**—Go to step 12.



BACK

Protected by AR



12. Check for continuity between the No. 23 (UNLOCK) and No. 24 (LOCK) terminals of the under-dash fuse/relay box connector T (34P).

**UNDER-DASH FUSE/RELAY BOX CONNECTOR T (34P)**

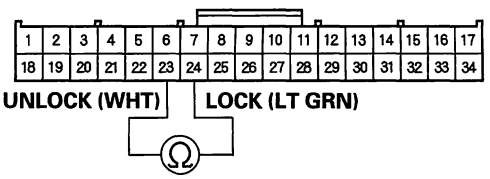


Wire side of female terminals

*Is there continuity?*

**YES**—Repair a short in the wire between the LOCK wire and UNLOCK wire. ■

**NO**—Faulty MICU; replace the under-dash fuse/relay box. ■

Protected by AR



## Symptom Troubleshooting

### Power Door Locks/Keyless

1. If the door lock system works properly, but the keyless operation does not, refer to the immobilizer-keyless control unit symptom troubleshooting information (see page 22-333).

   NOTE: The keyless system does not function when:
   - Any of the doors is open.
   - Ignition key is in the ignition key switch.
   - Ignition switch is ON (II).

| No. | Symptom | Check Items |
|---|---|---|
| 1 | The doors will not lock or unlock.* | • MICU input test (see page 22-131)<br>• Driver's door key cylinder switch test (see page 22-139)<br>• Door lock switch test (see page 22-138)<br>• Door lock knob switch test (see page 22-137)<br>• Keyless remote transmitter test (see page 22-142) |
| 2 | The doors will not lock.* | • MICU input test (see page 22-131)<br>• Door lock knob switch test (see page 22-137)<br>• Tailgate latch switch test (see page 22-140)<br>• Driver's door switch test (check the door switch ON/OFF information with the HDS)<br>• Keyless remote transmitter test (see page 22-142) |
| 3 | The doors will not unlock.* | • MICU input test (see page 22-131)<br>• Door lock knob switch test (see page 22-137)<br>• Keyless remote transmitter test (see page 22-142) |
| 4 | Keyless operation does not work (LOCK, UNLOCK, PANIC). | Symptom troubleshooting (see page 22-127). |
| 5 | Doors will not unlock with the transmitter, but will unlock with the door switch. | Symptom troubleshooting (see page 22-129). |
| 6 | Doors will not lock with the transmitter, but will lock with the door switch. | Symptom troubleshooting (see page 22-129). |
| 7 | Doors automatically relock after being unlocked with the transmitter even though a door has been opened. | Symptom troubleshooting (see page 22-130). |
| 8 | The horn does not sound and/or the headlights do not flash when PANIC button on the transmitter pressed. | Symptom troubleshooting (see page 22-129). |
| 9 | Keyless operation will work even though the ignition key is in the ignition switch. | Ignition key switch test (see page 22-207). |

*: If only one door is not working properly, check that door's lock actuator first, then check the other items listed in this table.



BACK

Protected by AR



## Keyless operation does not work (LOCK, UNLOCK, PANIC)

NOTE:
- Before troubleshooting, check the B-CAN DTCs. If any DTC is indicated, troubleshoot the indicated DTC first.
- Before troubleshooting, do the keyless transmitter test (see page 22-142).

1. Turn the ignition switch ON (II).

2. Try to start the engine.

   *Does the engine start?*

   **YES**—The immobilizer system is OK, go to step 3.

   **NO**—Go to the immobilizer symptom troubleshooting (see page 22-335).■

3. Turn the ignition switch OFF.

4. Connect the HDS to the data link connector.

5. Close all doors, then turn the ignition switch ON (II).

6. Enter the BODY ELECTRICAL menu, and check the door switch parameters.

   *Do all door switches indicate OFF?*

   **YES**—Go to step 7.

   **NO**—Faulty door switch, or shorted door switch wire. Repair as necessary.■

7. Remove the ignition key from the ignition switch.

8. Disconnect the immobilizer-keyless control unit 7P connector.

9. Check for voltage between the immobilizer-keyless control unit 7P connector No. 1 terminal and body ground.

**IMMOBILIZER-KEYLESS CONTROL UNIT 7P CONNECTOR**

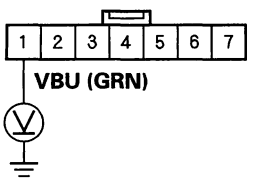


Wire side of female terminals

*Is there battery voltage?*

**YES**—Go to step 10.

**NO**—Check the No. 23 (10 A) fuse in the under-hood fuse/relay box. If the fuse is blown, replace the fuse and repair a short to ground in the wire. If the fuse is OK, repair an open in the wire.■

10. Disconnect the ignition key switch 6P connector.

11. At the ignition key switch side, check for continuity between the ignition key switch 6P connector No. 1 and No. 2 terminals.

**IGNITION KEY SWITCH 6P CONNECTOR**

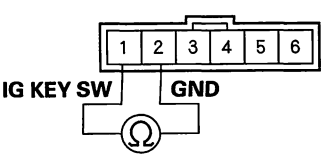


Terminal side of male terminals

*Is there continuity?*

**YES**—Faulty ignition key switch, replace the steering lock assembly.■

**NO**—Go to step 12.

(cont'd)

Protected by AR



## Symptom Troubleshooting (cont'd)

12. Check for continuity between the immobilizer-keyless control unit 7P connector No. 6 terminal and body ground.

**IMMOBILIZER-KEYLESS CONTROL UNIT 7P CONNECTOR**

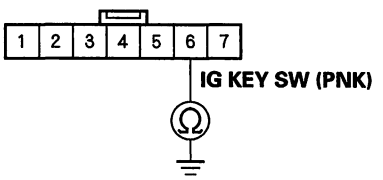


Wire side of female terminals

*Is there continuity?*

**YES**—Repair a short to ground in the wire. ■

**NO**—Replace the immobilizer-keyless control unit. ■



BACK

Protected by AR



## Doors will not unlock (or lock) with the transmitter, but will unlock (lock) with the door switch

NOTE: Before troubleshooting, check the B-CAN DTCs. If any DTC is indicated, troubleshoot the indicated DTC first.

1. Turn the ignition switch OFF.
2. Remove the ignition key from the ignition switch.
3. Close and lock the doors.
4. Try to lock/unlock the doors with the keyless transmitter.

   *Do the door lock actuators work normally?*

   **YES**—Intermittent failure. The system is OK at this time.■

   **NO**—Go to step 5.
5. Open the driver's door.

   *Does the key-in reminder chime sound with the key in the ignition switch?*

   **YES**—Faulty ignition key switch, or short to ground on the ignition key switch PNK wire. Repair as necessary.■

   **NO**—Go to step 6.
6. Do the transmitter test (see page 22-142).

   *Is the transmitter OK?*

   **YES**—Substitute a known-good MICU and recheck.■

   **NO**—Replace the transmitter.■

## The horn does not sound and/or the headlights do not flash when the PANIC button on the transmitter is pressed

NOTE: Before troubleshooting, check the B-CAN DTCs. If any DTC is indicated, troubleshoot the indicated DTC first.

1. Press the PANIC button.

   *Does the horn sound?*

   **YES**—Go to step 3.

   **NO**—Go to step 2.
2. Press the horn button.

   *Does the horn sound?*

   **YES**—Go to step 3.

   **NO**—Check the horn circuit.■
3. Turn the headlight switch ON.

   *Do the headlights come on?*

   **YES**—Go to step 4.

   **NO**—Check the lighting circuit.■
4. Do the transmitter test (see page 22-142).

   *Is the transmitter OK?*

   **YES**—Substitute a known-good MICU and recheck.■

   **NO**—Replace the transmitter.■

Protected by AR



## Symptom Troubleshooting (cont'd)

### Doors automatically relock after being unlocked with the transmitter even though a door has been opened

1. Turn the ceiling light switch in DOOR position.
2. Turn the ignition switch ON (II).
3. Close all doors.
4. Open and close each door one at a time.
5. Watch the ceiling light and the door indicator on the gauge control module.

   *Does the ceiling light and door indicator come on when the door is open, and go off when the door is closed?*

   **YES**—Substitute a known-good MICU and recheck. If the symptom goes away, replace the original MICU. ■

   **NO**—Check for an open in the wire between the MICU and the door switch. If the wire is OK, replace the door switch. ■



BACK

Protected by AR



## MICU Input Test

1. Before troubleshooting the keyless/poor door locks/security system, troubleshoot the B-CAN System Diagnosis Test Mode A (see page 22-88).

2. Check the No. 10 (7.5 A) and No. 25 (20 A) fuses in the under-dash fuse/relay box. If any fuse is blown, replace it and go to step 3.

3. Disconnect the under-dash fuse/relay box connectors E, F, G, M, N, Q, R, and T.

   NOTE: All connector views are shown from wire side of female terminals.

**UNDER-DASH FUSE/RELAY BOX CONNECTOR E (42P)**

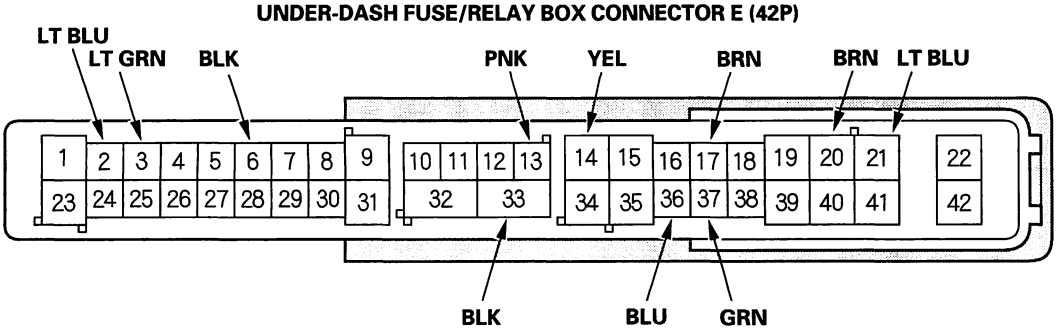


**UNDER-DASH FUSE/RELAY BOX CONNECTOR F (34P)**

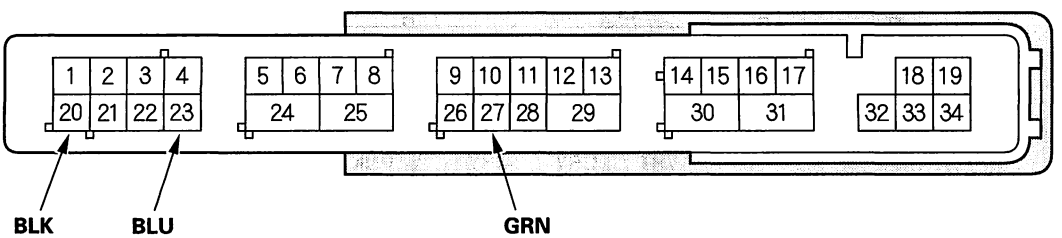


**UNDER-DASH FUSE/RELAY BOX CONNECTOR G (21P)**

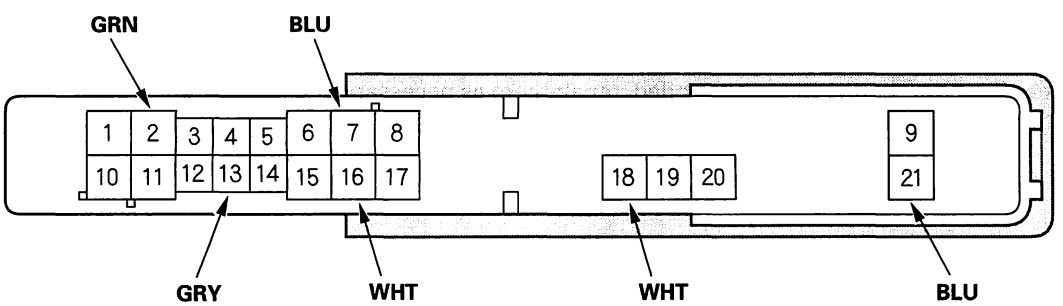


(cont'd)

Protected by AR



## MICU Input Test (cont'd)

UNDER-DASH FUSE/RELAY BOX
CONNECTOR M (10P)

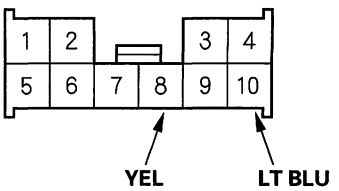


UNDER-DASH FUSE/RELAY BOX
CONNECTOR N (14P)

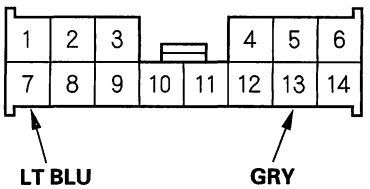


UNDER-DASH FUSE/RELAY BOX
CONNECTOR R (20P)

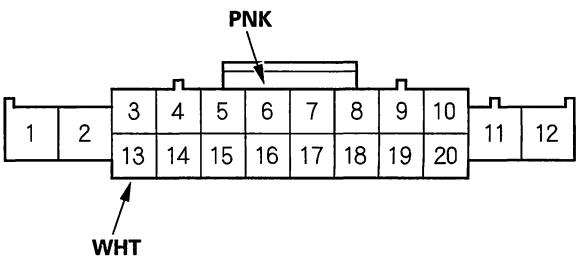


UNDER-DASH FUSE/RELAY BOX
CONNECTOR Q (16P)

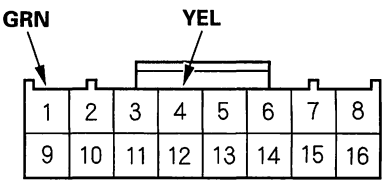


UNDER-DASH FUSE/RELAY BOX
CONNECTOR T (34P)

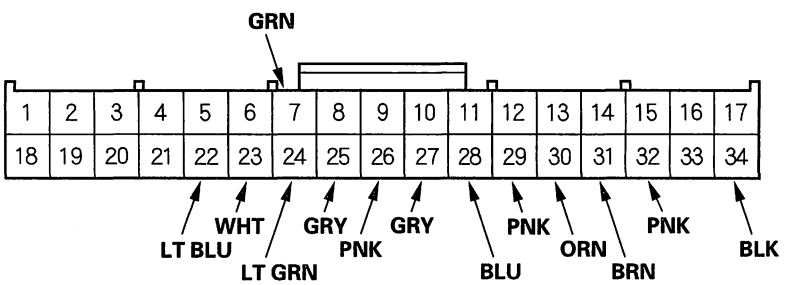


4. Inspect the connector and socket terminals to be sure they are all making good contact.

   - If the terminals are bent, loose or corroded, repair them as necessary and recheck the system.
   - If the terminals look OK, go to step 5.



BACK

Protected by AR



5. With the connector still disconnected, make these input tests at the appropriate connector.

- If any test indicates a problem, find and correct the cause, then recheck the system.
- If all the input tests prove OK, go to step 6.

| Cavity | Wire | Test condition | Test: Desired result | Possible cause if result is not obtained |
|---|---|---|---|---|
| F23<br>G7 | BLU | Under all conditions | Connect G16 and F23, G16 and G7 terminals with a jumper wire momentarily:<br>The horn should sound. | • Poor ground (body ground)<br>• Blown No. 12 (15 A) fuse in the under-hood fuse/relay box<br>• Faulty horn<br>• An open in the wire |
| G16 | WHT | Under all conditions | Check for voltage to ground:<br>There should be battery voltage. | • Blown No. 12 (15 A) fuse in the under-hood fuse/relay box<br>• An open in the wire |
| G18 | WHT | Under all conditions | Check for voltage to ground:<br>There should be battery voltage. | • Blown No. 4 (50 A) fuse in the under-hood fuse/relay box<br>• An open in the wire |
| E20 | BRN | Under all conditions | Connect G21 and E20 terminals with a jumper wire:<br>The tailgate release actuator should work (Tailgate should open). | • Poor ground (G602)<br>• Faulty tailgate release actuator<br>• An open in the wire |
| N7<br>N13 | LT BLU<br>GRY | Under all conditions | Connect battery power to the N13 terminal and ground the N7 terminal momentarily:<br>The driver's door lock actuator should unlock. | • Faulty driver's door lock actuator<br>• An open in the wire |
| M8<br>M10 | YEL<br>LT BLU | Under all conditions | Connect battery power to the M8 terminal and ground the M10 terminal momentarily:<br>The front passenger's and right rear door lock actuators should unlock. | • Faulty front passenger's or right rear door lock actuator<br>• An open in the wire |
| E14<br>E21 | YEL<br>LT BLU | Under all conditions | Connect battery power to the E14 terminal and ground the E21 terminal momentarily:<br>The left rear door lock actuator should unlock. | • Faulty left rear door lock actuator<br>• An open in the wire |
| R13 | WHT | Under all conditions | Connect G2 and R13 terminals with a jumper wire momentarily:<br>The keyless buzzer should sound. | • Blown No. 23 (10 A) fuse in the under-hood fuse/relay box<br>• Faulty keyless buzzer<br>• Poor ground (G451)<br>• An open in the wire |

(cont'd)

Protected by AR



## MICU Input Test (cont'd)

6. Reconnect the connectors to the under-dash fuse/relay box, and make these input tests at the connectors.

- If any test indicates a problem, find and correct the cause, then recheck the system.
- If all the input tests prove OK, the MICU must be faulty; replace the under-dash fuse/relay box.

| Cavity | Wire | Test condition | Test: Desired result | Possible cause if result is not obtained |
|---|---|---|---|---|
| E6 | BLK | Under all conditions | Check for voltage to ground: There should be less than 0.5 V. | • Poor ground (G601)<br>• An open in the wire |
| E13 | PNK | Tailgate outer handle switch unlocked | Check for voltage to ground: There should be less than 1 V. | • Poor ground (G602)<br>• Faulty tailgate outer handle switch<br>• An open in the wire |
| | | Tailgate outer handle switch neutral | Check for voltage to ground: There should be 5 V or more. | • Faulty tailgate outer handle switch<br>• Short to ground |
| E33 | BLK | Under all conditions | Check for voltage to ground: There should be less than 0.5 V. | • Poor ground (G601)<br>• An open in the wire |
| F20 | BLK | Under all conditions | Check for voltage to ground: There should be less than 0.5 V. | • Poor ground (G451)<br>• An open in the wire |
| T34 | BLK | Under all conditions | Check for voltage to ground: There should be less than 0.5 V. | • Poor ground (G501)<br>• An open in the wire |
| E2 | LT BLU | Right rear door open | Check for voltage to ground: There should be less than 1 V. | • Faulty right rear door switch<br>• An open in the wire |
| | | Right rear door closed | Check for voltage to ground: There should be 5 V or more. | • Faulty right rear door switch<br>• Short to ground |
| E3 | LT GRN | Front passenger's door open | Check for voltage to ground: There should be less than 1 V. | • Faulty front passenger's door switch<br>• An open in the wire |
| | | Front passenger's door closed | Check for voltage to ground: There should be 5 V or more. | • Faulty front passenger's door switch<br>• Short to ground |
| E17 | BRN | Left rear door open | Check for voltage to ground: There should be less than 1 V. | • Faulty left rear door switch<br>• An open in the wire |
| | | Left rear door closed | Check for voltage to ground: There should be 5 V or more. | • Faulty left rear door switch<br>• Short to ground |
| E36 | BLU | Tailgate open | Check for voltage to ground: There should be less than 1 V. | • Poor ground (G602)<br>• Faulty tailgate latch switch<br>• An open in the wire |
| | | Tailgate closed | Check for voltage to ground: There should be 5 V or more. | • Faulty tailgate latch switch<br>• Short to ground |
| E37 | GRN | Driver's door open | Check for voltage to ground: There should be less than 1 V. | • Faulty driver's door switch<br>• An open in the wire |
| | | Driver's door closed | Check for voltage to ground: There should be 5 V or more. | • Faulty driver's door switch<br>• Short to ground |
| F27 | GRN | Transmission range switch in P | Check for voltage to ground: There should be less than 1 V. | • Poor ground (G101)<br>• Faulty transmission range switch<br>• An open in the wire |
| | | Transmission range switch in any other position than P | Check for voltage to ground: There should be 5 V or more. | • Faulty transmission range switch<br>• Short to ground |
| G13 | GRY | Hood open | Check for voltage to ground: There should be less than 1 V. | • Poor ground (G451)<br>• Faulty hood switch<br>• An open in the wire |
| | | Hood closed | Check for voltage to ground: There should be 5 V or more. | • Faulty hood switch<br>• Short to ground |
| Q1 | GRN | Under all conditions | Check for voltage to ground: There should be battery voltage. | • Blown No. 23 (10 A) fuse in the under-hood fuse/relay box<br>• An open in the wire<br>• Faulty under-dash fuse/relay box |
| Q4 | YEL | Under all conditions | Check for voltage to ground: There should be 5 V or more. | An open in the wire |
| R6 | PNK | Ignition key inserted into the ignition switch | Check for voltage to ground: There should be less than 1 V. | • Poor ground (G502)<br>• Faulty ignition key switch<br>• An open in the wire |
| | | Ignition key removed from the ignition switch | Check for voltage to ground: There should be 5 V or more. | • Faulty ignition key switch<br>• Short to ground |
| T22 | LT BLU | Front passenger's door lock knob switch unlocked | Check for voltage to ground: There should be less than 1 V. | • Poor ground (G505)<br>• Faulty front passenger's door lock knob switch<br>• An open in the wire |
| | | Front passenger's door lock knob switch locked | Check for voltage to ground: There should be 5 V or more. | • Faulty front passenger's door lock knob switch<br>• Short to ground |



BACK

Protected by AR



| Cavity | Wire | Test condition | Test: Desired result | Possible cause if result is not obtained |
|---|---|---|---|---|
| T23 | WHT | Driver's door lock knob switch unlocked | Check for voltage to ground: There should be less than 1 V. | • Poor ground (G501)<br>• Faulty driver's door lock knob switch<br>• An open in the wire |
| | | Driver's door lock knob switch locked | Check for voltage to ground: There should be 5 V or more. | • Faulty driver's door lock knob switch<br>• Short to ground |
| T24 | LT GRN | Driver's door lock knob switch unlocked | Check for voltage to ground: There should be 5 V or more. | • Faulty driver's door lock knob switch<br>• Short to ground |
| | | Driver's door lock knob switch locked | Check for voltage to ground: There should be less than 1 V. | • Poor ground (G501)<br>• Faulty driver's door lock knob switch<br>• An open in the wire |
| T25 | GRY | Right rear door lock knob switch unlocked | Check for voltage to ground: There should be less than 1 V. | • Poor ground (G651)<br>• Faulty right rear door lock knob switch<br>• An open in the wire |
| | | Right rear door lock knob switch locked | Check for voltage to ground: There should be 5 V or more. | • Faulty right rear door lock knob switch<br>• Short to ground |
| T26 | PNK | Left rear door lock knob switch unlocked | Check for voltage to ground: There should be less than 1 V. | • Poor ground (G601)<br>• Faulty left rear door lock knob switch<br>• An open in the wire |
| | | Left rear door lock knob switch locked | Check for voltage to ground: There should be 5 V or more. | • Faulty left rear door lock knob switch<br>• Short to ground |
| T27 | GRY | Driver door lock switch unlocked | Check for voltage to ground: There should be less than 1 V. | • Poor ground (G501)<br>• Faulty driver door lock switch<br>• An open in the wire |
| | | Driver door lock switch in neutral | Check for voltage to ground: There should be 5 V or more. | • Faulty driver door lock switch<br>• Short to ground |
| T28 | BLU | Driver door lock switch locked | Check for voltage to ground: There should be less than 1 V. | • Poor ground (G501)<br>• Faulty driver door lock switch<br>• An open in the wire |
| | | Driver door lock switch in neutral | Check for voltage to ground: There should be 5 V or more. | • Faulty driver door lock switch<br>• Short to ground |
| T29 | PNK | Front passenger's door lock switch unlocked | Check for voltage to ground: There should be less than 1 V. | • Poor ground (G505)<br>• Faulty front passenger's door lock switch<br>• An open in the wire |
| | | Front passenger's door lock switch in neutral | Check for voltage to ground: There should be 5 V or more. | • Faulty front passenger's door lock switch<br>• Short to ground |
| T30 | ORN | Front passenger's door lock switch locked | Check for voltage to ground: There should be less than 1 V. | • Poor ground (G505)<br>• Faulty front passenger's door lock switch<br>• An open in the wire |
| | | Front passenger's door lock switch in neutral | Check for voltage to ground: There should be 5 V or more. | • Faulty front passenger's door lock switch<br>• Short to ground |
| T31 | BRN | Driver's door key cylinder switch unlocked | Check for voltage to ground: There should be less than 1 V. | • Poor ground (G501)<br>• Faulty driver's door key cylinder switch<br>• An open in the wire |
| | | Driver's door key cylinder switch in neutral | Check for voltage to ground: There should be 5 V or more. | • Faulty driver's door key cylinder switch<br>• Short to ground |
| T32 | PNK | Driver's door key cylinder switch locked | Check for voltage to ground: There should be less than 1 V. | • Poor ground (G501)<br>• Faulty driver's door key cylinder switch<br>• An open in the wire |
| | | Driver's door key cylinder switch in neutral | Check for voltage to ground: There should be 5 V or more. | • Faulty driver's door key cylinder switch<br>• Short to ground |

Protected by AR



## Door Lock Actuator Test

### Driver's Door and Left Rear Door

1. Remove the door panel (see page 20-6).
2. Disconnect the 10P connector (A) from the actuator (B).

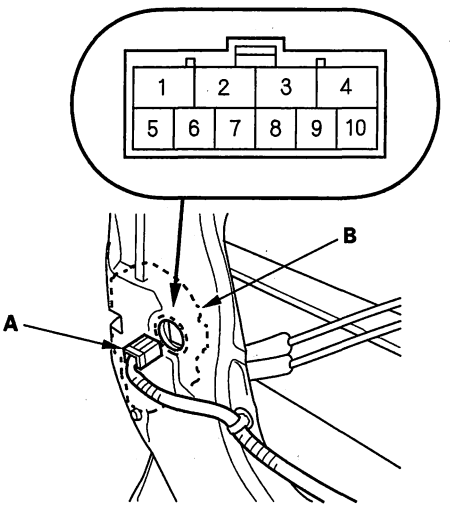


The illustration shows the driver's door.

3. Check actuator operation by connecting power and ground according to the table. To prevent damage to the actuator, apply battery voltage only momentarily.

| Position \ Terminal | 1 | 2 |
|---|---|---|
| LOCK | ⊕ | ⊖ |
| UNLOCK | ⊖ | ⊕ |

4. If the actuator does not operate as specified, replace it.

### Front Passenger's Door and Right Rear Door

1. Remove the door panel (see page 20-6).
2. Disconnect the 10P connector (A) from the actuator (B).

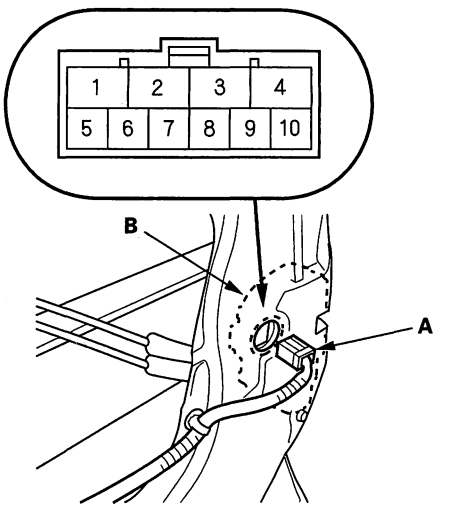


The illustration shows the front passenger's door.

3. Check actuator operation by connecting power and ground according to the table. To prevent damage to the actuator, apply battery voltage only momentarily.

| Position \ Terminal | 3 | 4 |
|---|---|---|
| LOCK | ⊕ | ⊖ |
| UNLOCK | ⊖ | ⊕ |

4. If the actuator does not operate as specified, replace it.



BACK

Protected by AR



# Door Lock Knob Switch Test

## Driver's Door

1. Remove the driver's door panel (see page 20-6).
2. Disconnect the 10P connector (A) from the actuator (B).

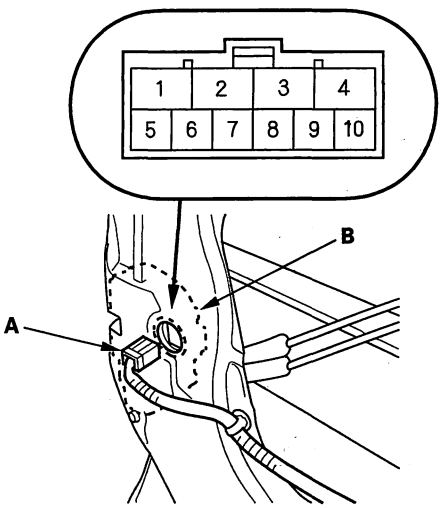


3. Check for continuity between the terminals.
   - There should be continuity between the No. 6 and No. 5 terminals when the door lock knob switch is in the LOCK position and no continuity when the switch is in the UNLOCK position.
   - There should be continuity between the No. 7 and No. 5 terminals when the door lock knob switch is in the UNLOCK position and no continuity when the switch is in the LOCK position.
4. If the continuity is not as specified, replace the door lock actuator.

## Passenger's Door

1. Remove the passenger's door panel (see page 20-6).
2. Disconnect the 10P connector (A) from the actuator (B).

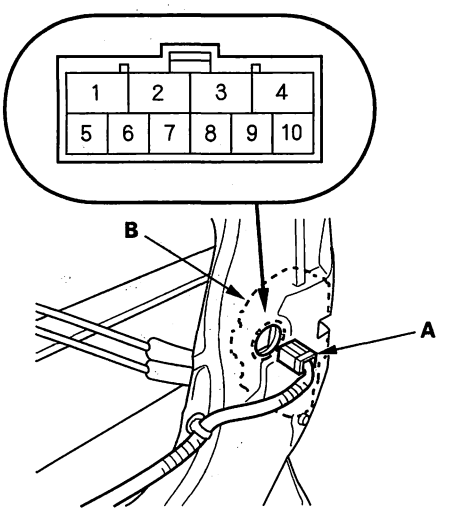


3. Check for continuity between the terminals. There should be continuity between the No. 8 [No. 7] and No. 10 [No. 5] terminals when the door lock knob switch in the UNLOCK position and no continuity when the switch is in the LOCK position.
   [ ] : Left rear door
4. If the continuity is not specified, replace the door lock actuator.

Protected by AR



## Door Lock Switch Test

### Driver's door

1. Remove the power window master switch and disconnect its connector (see page 22-228).

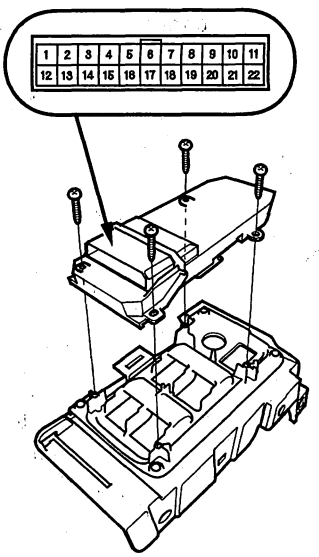


2. Check for continuity between the power window master switch 22P connector terminals.
   - There should be continuity between the No. 16 and No. 22 terminals when the door lock switch is in the LOCK position.
   - There should be no continuity between the No. 16 and No. 22 terminals when the door lock switch is in the neutral or UNLOCK position.
   - There should be continuity between the No. 18 and No. 22 terminals when the door lock switch is in the UNLOCK position.
   - There should be no continuity between the No. 18 and No. 22 terminals when the door lock switch is in the neutral or LOCK position.
3. If the continuity is not as specified, replace the power window master switch (see page 22-228).

### Front passenger's door

1. Remove the front passenger's power window switch (see page 22-228).

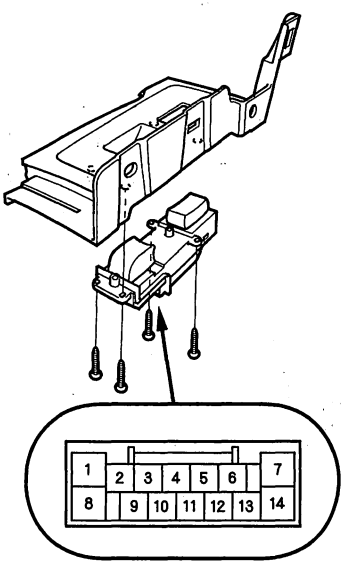


2. Check for continuity between the front passenger's power window switch 14P connector terminals.
   - There should be continuity between the No. 1 and No. 10 terminals when the door lock switch is in the LOCK position.
   - There should be no continuity between the No. 1 and No. 10 terminals when the door lock switch is in the neutral or UNLOCK position.
   - There should be continuity between the No. 1 and No. 12 terminals when the door lock switch is in the UNLOCK position.
   - There should be no continuity between the No. 1 and No. 12 terminals when the door lock switch is in the neutral or LOCK position.
3. If the continuity is not as specified, replace the front passenger's power window switch (see page 22-228).



BACK

Protected by AR



## Door Key Cylinder Switch Test

1. Remove the driver's door panel (see page 20-6).

2. Disconnect the 10P connector (A) from the key cylinder switch (B).

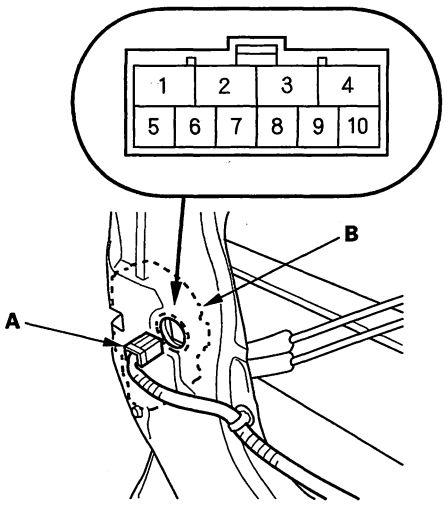


3. Check for continuity between the terminals.

   - There should be continuity between the No. 9 and No. 5 terminals when the door key cylinder switch is in LOCK position.
   - There should be no continuity between the No. 9 and No. 5 terminals when the door key cylinder switch is in the neutral or UNLOCK position.
   - There should be continuity between the No. 8 and No. 5 terminals when the door key cylinder switch is in UNLOCK position.
   - There should be no continuity between the No. 8 and No. 5 terminals when the door key cylinder switch is in the neutral or LOCK position.

4. If the continuity is not as specified, replace the door latch (see page 20-11).

## Tailgate Release Actuator Test

1. Open the tailgate.

2. Remove the tailgate lower trim panel (see page 20-174).

3. Disconnect the 2P connector from the tailgate latch.

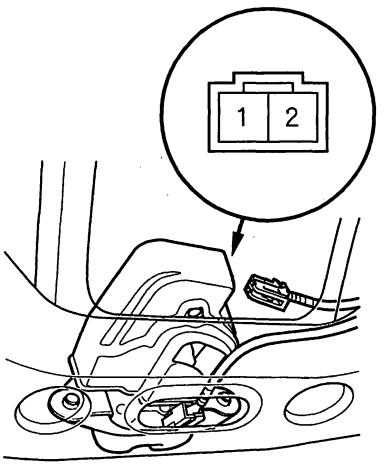


4. Check actuator operation by connecting power to the No. 2 terminal and ground to the No. 1 terminal momentarily. The actuator should work.

5. If the actuator does not work, replace the tailgate latch (see page 20-188).

Protected by AR



## Tailgate Latch Switch Test

1. Open the tailgate.
2. Remove the tailgate lower trim panel (see page 20-174).
3. Disconnect the 2P connector (A) from the tailgate latch (B).

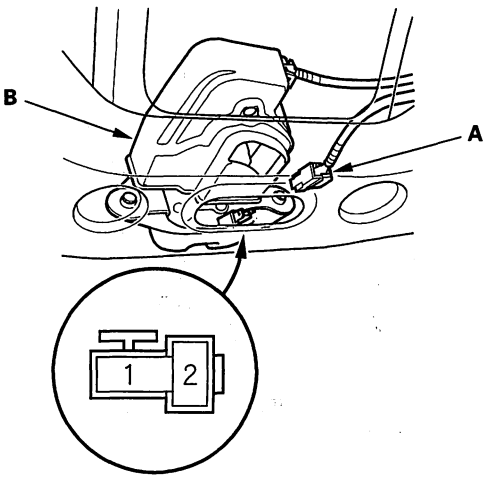


4. Check for continuity between the No. 1 and No. 2 terminals.
   - With the tailgate open, there should be continuity.
   - With the tailgate closed, there should be no continuity.
5. If the continuity is not as specified, replace the tailgate latch (see page 20-188).

## Hood Switch Test

1. Open the hood.
2. Remove the cover (see page 20-187).
3. Disconnect the 2P connector from the hood switch.

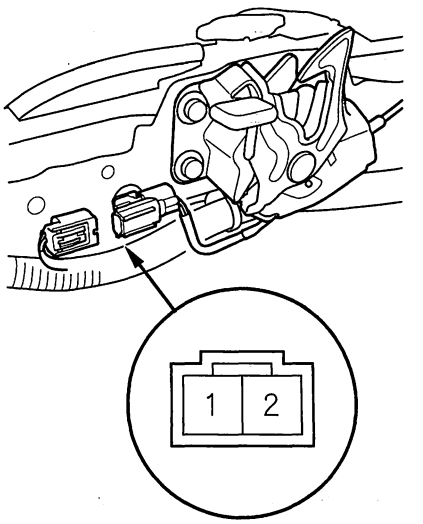


4. Check for continuity between the terminals.
   - There should be continuity between the No. 1 and No. 2 terminals when the hood is opened (latch released).
   - There should be no continuity between the No. 1 and No. 2 terminals when the hood is closed and completely latched.
5. If the continuity is not as specified, replace the hood latch assembly (see page 20-187).



BACK

Protected by AR



## Tailgate Outer Handle Switch Test/ Replacement

1. Open the tailgate.
2. Remove the tailgate lower trim panel (see page 20-174).
3. Disconnect the 3P connector (A) and remove the two bolts.

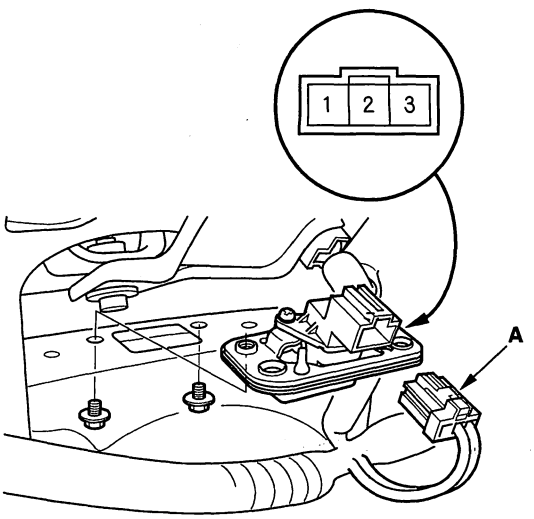


4. Check for continuity between the terminals.
   - There should be continuity between the No. 2 and No. 3 terminals when the switch is pressed.
   - There should be no continuity between the No. 2 and No. 3 terminals when the switch is released.
5. If the continuity is not as specified, replace the tailgate outer handle switch.

## Keyless Buzzer Test/Replacement

1. Remove the left inner fender (see page 20-176).
2. Disconnect the 2P connector (A) and remove the keyless buzzer by releasing the hooks.

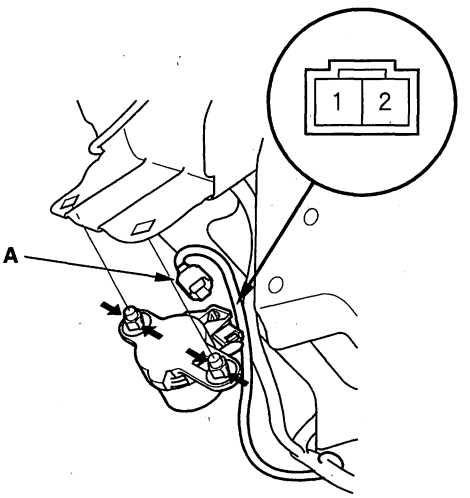


3. Test the buzzer by connecting battery power to the No. 2 terminal and grounding the No. 1 terminal of the buzzer momentarily; the buzzer should sound.
4. If the buzzer does not sound, replace the keyless buzzer.

Protected by AR



## Transmitter Test

NOTE:
- If the doors unlock or lock with the transmitter, but the LED on the transmitter does not come on, the LED is faulty; replace the transmitter.
- If any door is open, you cannot lock the doors with the transmitter.
- If you unlocked the doors with the transmitter, but do not open any of the doors within 30 to 90 seconds, the doors relock automatically.
- The doors do not lock/unlock, and panic does not work with the transmitter if the ignition key is inserted in the ignition switch.

### With HDS

1. Press the lock or unlock button five or six times to reset the transmitter.

   - If the locks work, the transmitter is OK.
   - If any of the transmitter buttons does not work, replace the transmitter, then do the transmitter programming register (see page 22-341).
   - If the locks don't work, go to step 2.

2. Connect the HDS to the data link connector.

3. Select the KEYLESS from the BODY ELECTRICAL menu, then enter the KEYLESS CHECK.

4. Press lock, unlock, trunk, or panic button and check the responce on the screen of the HDS.

   NOTE: The door lock actuators may or may not cycle when receiving input from the transmitter.

   - If KEYLESS ENTRY TRANSMITTER CODE IS RECEIVED is indicated, the transmitter is OK.
   - If DIFFERENT KEYLESS ENTRY TRANSMITTER CODE IS RECEIVED is indicated, the transmitter is not registered to the vehicle, if necessary, reprogram and register the transmitter (see page 22-341).
   - If KEYLESS ENTRY TRANSMITTER CODE IS NOT RECEIVED is indicated, go to step 5.

5. Open the transmitter and check for water damage.

   - If you find any water damage, replace the transmitter, then reprogram and register the transmitter (see page 22-341).
   - If there is no water damage, go to step 6.

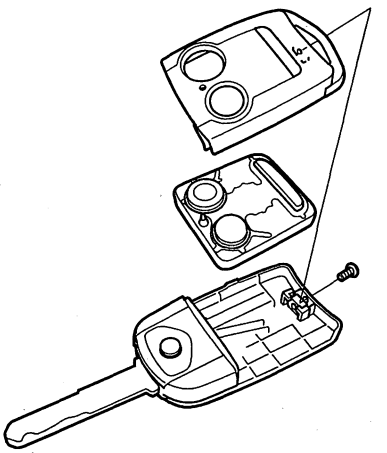

6. Replace the transmitter battery (A) with a new one, and press lock or unlock button and check the receive condition on the screen of the HDS.

   - If KEYLESS ENTRY TRANSMITTER CODE IS RECEIVED is indicated, the transmitter is OK.
   - If KEYLESS ENTRY TRANSMITTR CODE IS NOT RECEIVED is indicated, go to step 7.

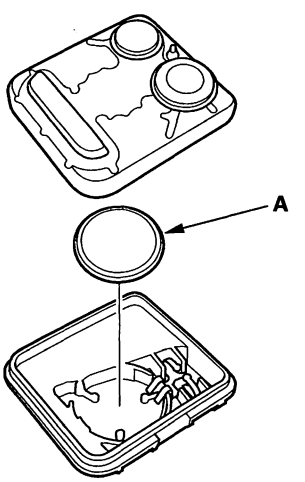




BACK

Protected by AR



7. Use a different known-good keyless transmitter assembly and repeat steps 3 and 4.

   NOTE: The keyless transmitter does not need to be programmed to the vehicle for this test.

   - If (DIFFERENT) KEYLESS ENTRY TRANSMITTER CODE IS RECEIVED is indicated, replace the keyless transmitter and do the immobilizer system registration (see page 22-341).
   - If KEYLESS ENTRY TRANSMITTER CODE IS NOT RECEIVED is indicated, the immobilizer-keyless control unit is faulty, replace it and do the immobilizer system registration (see page 22-341).

## Without HDS

1. Start the engine.

   - If the engine does not start, go to the immobilizer system troubleshooting (see page 22-335).
   - If the engine starts, go to step 2.

2. Press the lock or unlock button five or six times to reset the transmitter.

   - If the locks work, the transmitter is OK.
   - If the locks don't work, go to step 3.

3. Open the transmitter and check for water damage.

   - If you find any water damage, replace the transmitter.
   - If there is no water damage, go to step 4.

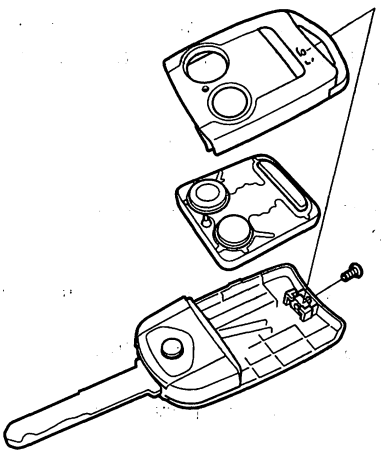

4. Replace the transmitter battery (A) with a new one, and try to lock and unlock the doors with the transmitter by pressing the lock or unlock button five or six times.

   - If the doors lock and unlock, the transmitter is OK.
   - If the doors don't lock and unlock, go to step 5.

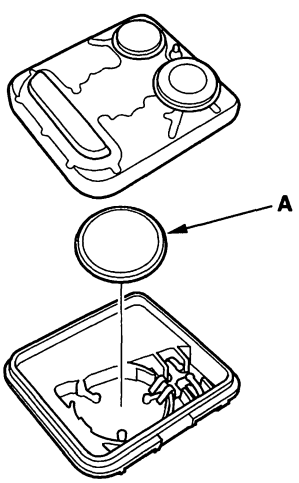


5. Reprogram and register the transmitter (see page 22-144), then try to lock and unlock the doors.

   - If the doors lock and unlock, the transmitter is OK.
   - If the doors don't lock and unlock, substitute a known-good transmitter and recheck (see page 22-341). If still not operating, replace the immobilizer-keyless control unit.

Protected by AR



## Transmitter Programming

Storing transmitter codes:
The codes of up to six transmitters can be stored into the immobilizer-keyless control unit memory. (If a seventh code is stored, the code which was input first will be erased.)

NOTE: It is important to maintain the time limits between the steps. Make sure the doors, the hood and the tailgate are closed.

1. Turn the ignition switch ON (II).
2. Within 1 to 4 sec., press the transmitter lock or unlock button.
3. Within 1 to 4 sec., turn the ignition switch OFF.
4. Within 1 to 4 sec., turn the ignition switch ON (II).
5. Repeat steps 2—4 two more times.
6. Within 1 to 4 sec., press the transmitter lock or unlock button.
7. Confirm you can hear the sound of the door lock actuators within 1 to 4 sec., then push the transmitter lock or unlock button again, or the code will not be stored.
8. Within 10 seconds of each other, push the lock or unlock buttons of the client's additional transmitters (up to five additional ones) for which you want the codes stored in the immobilizer-keyless control unit.
   Confirm that you can hear the sound of the door lock actuators after each transmitter code is stored.

   NOTE: In order to delete codes for lost transmitters, you must have all of the client's transmitters for which you want the codes stored in the immobilizer-keyless control unit. Using each transmitter at least once, program a combination of the transmitters into the immobilizer-keyless control unit's six available memory positions. Here are some examples:

   - If the client had 2 transmitters, and lost one, but will not be replacing it; program the remaining transmitter six times.
   - If the client had 2 transmitters, and lost one, and will be replacing it; program both transmitters three times.
9. Turn the ignition switch OFF, and remove the key.
10. Confirm proper operation with the transmitters.



BACK

Protected by AR



## Component Location Index

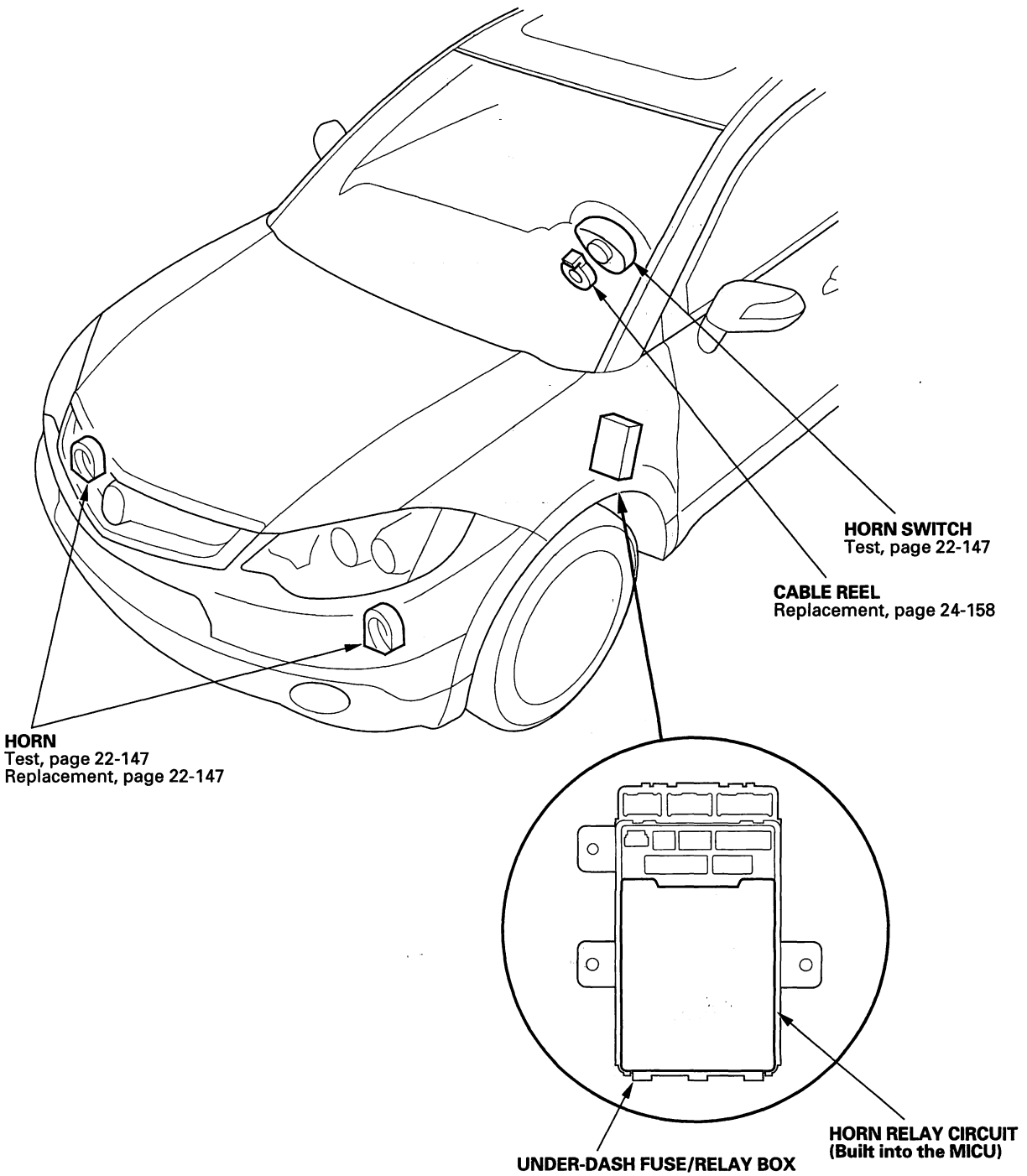


BACK

Protected by AR

# Horns

## Circuit Diagram

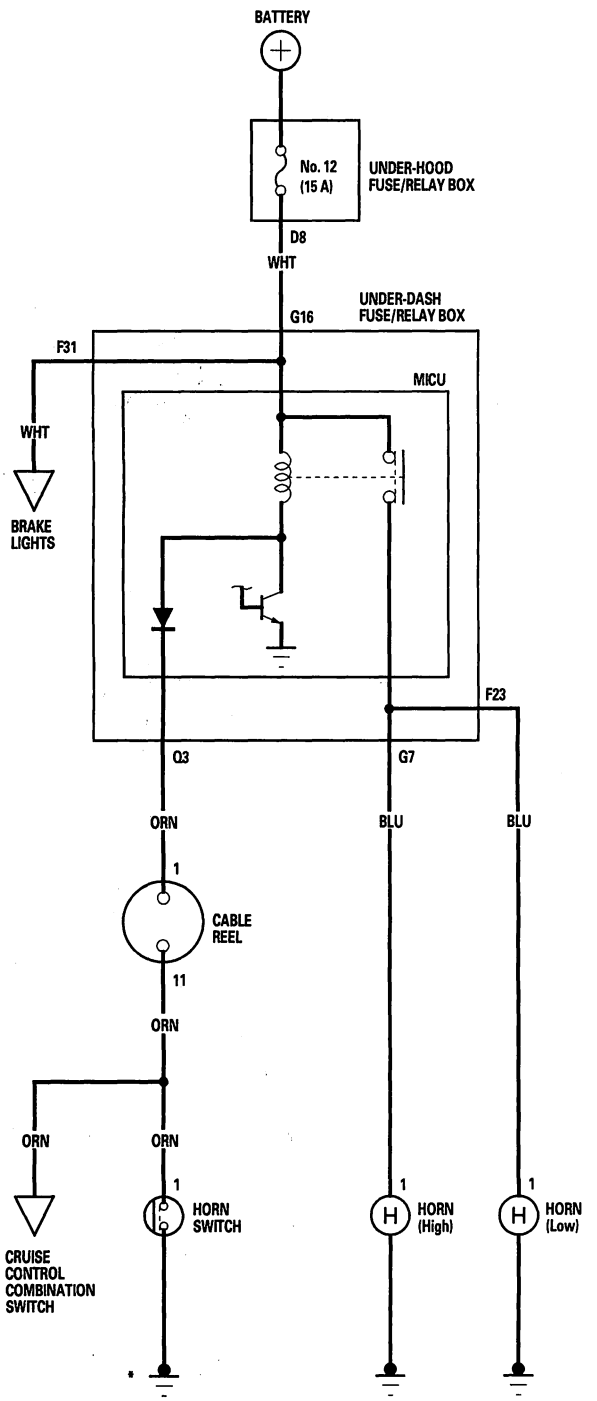


* : Ground through steering column.



BACK

Protected by AR



## Horn Test/Replacement

1. Remove the inner fender (see page 20-176).
2. Disconnect the 1P connector (A) from each horn (B).

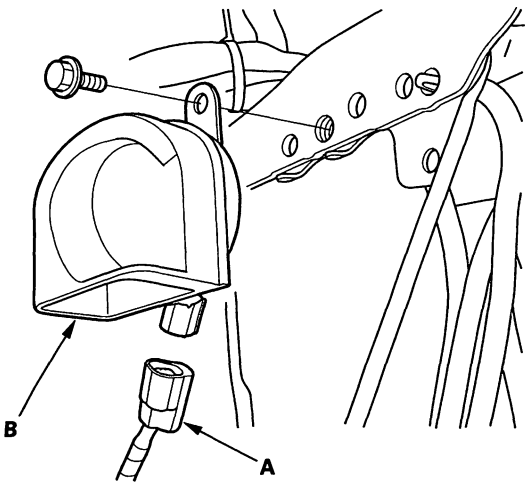


3. Test the horn by connecting battery power to the terminal (A) and grounding the bracket (B). The horn should sound.

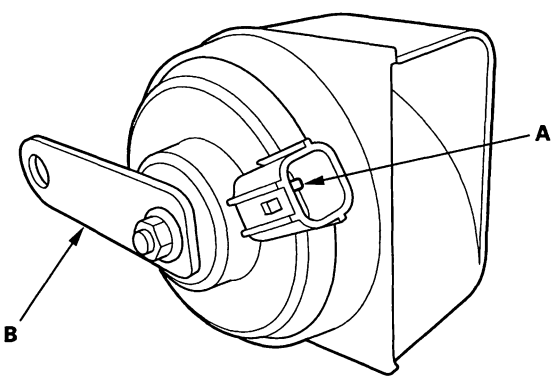


4. If it fails to sound, replace it.

## Horn Switch Test

1. Remove the steering column covers (see page 20-107).
2. Disconnect the cable reel 20P connector (A) from the dashboard wire harness.

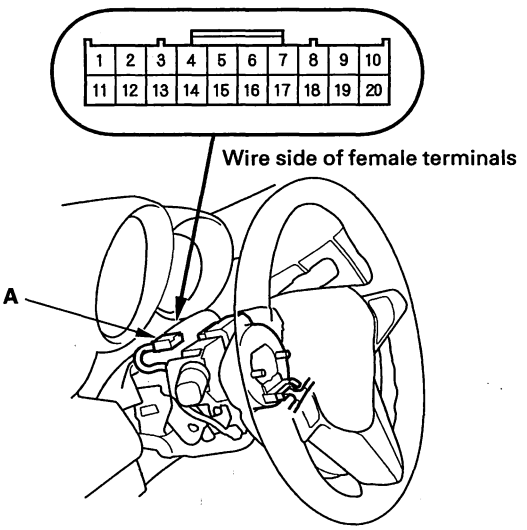


3. Using a jumper wire, connect the No. 1 terminal of the dashboard wire harness 20P connector to body ground.
   - If the horns sound, go to step 4.
   - If the horns don't sound, check these items:
     - No. 12 (15 A) fuse in the under-hood fuse/relay box.
     - MICU.
     - Horns.
     - An open in the wire.

(cont'd)

Protected by AR



## Horn Switch Test (cont'd)

4. Reconnect the cable reel 20P connector (A) to the dashboard wire harness.

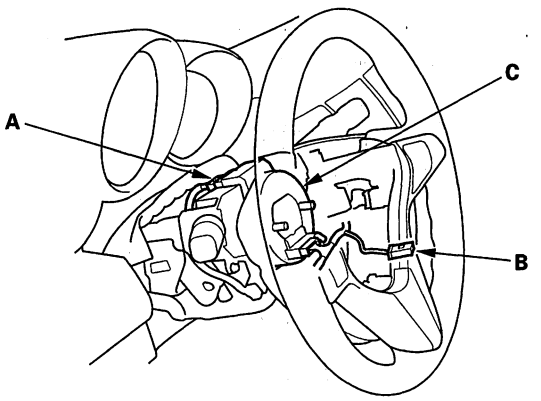


5. Remove the driver's airbag assembly (see page 24-146), and disconnect the horn switch 1P positive terminal (B) from the cable reel (C).

6. Using a jumper wire, connect the cable reel side 1P connector (C) to body ground.

   - If the horns sound, replace the driver's airbag assembly.
   - If the horns do not sound, check these items:
     – Cable reel.
     – An open in the wire (cable reel subharness).



BACK

Protected by AR



## Component Location Index

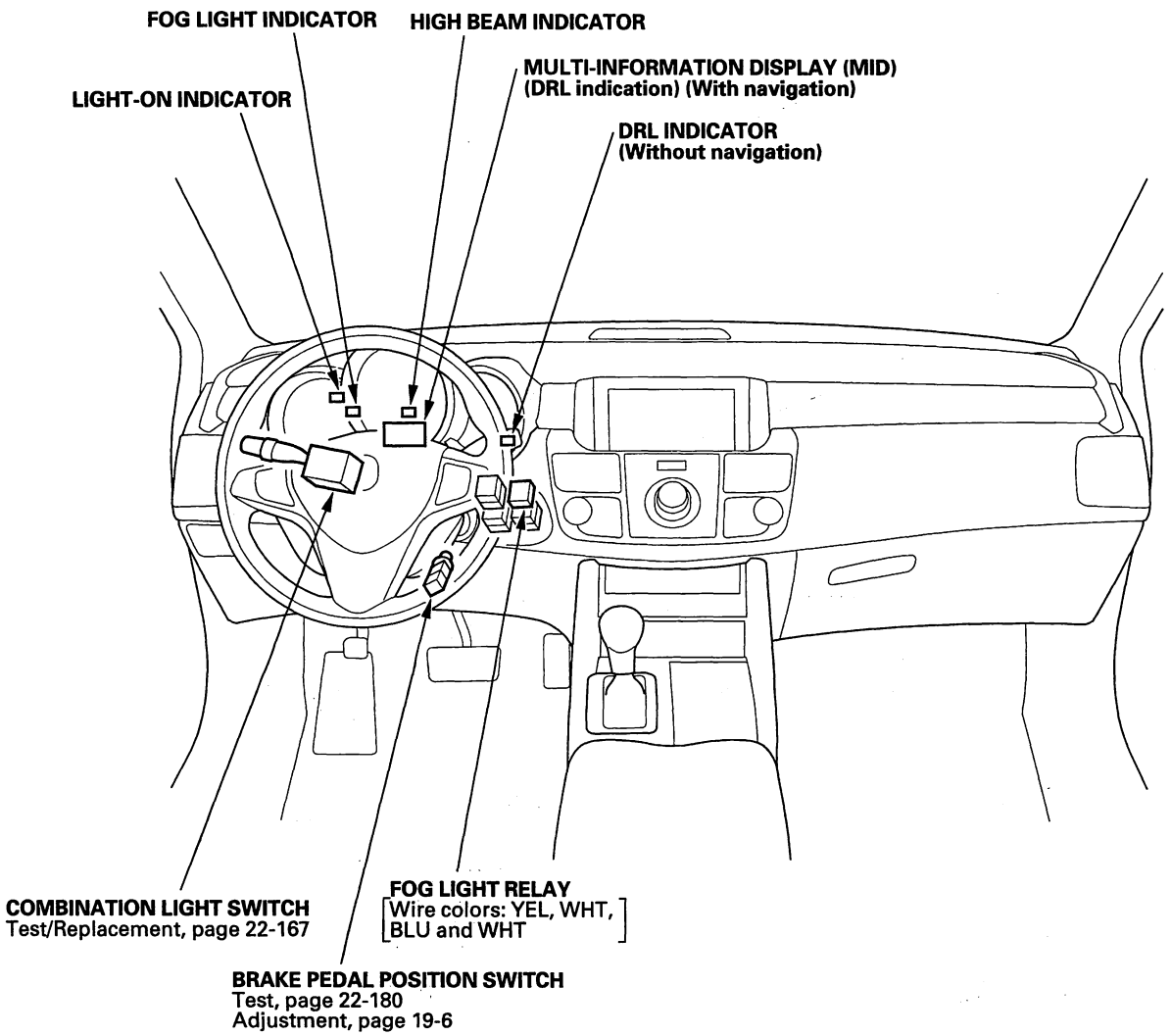


(cont'd)

Protected by AR



## Component Location Index (cont'd)

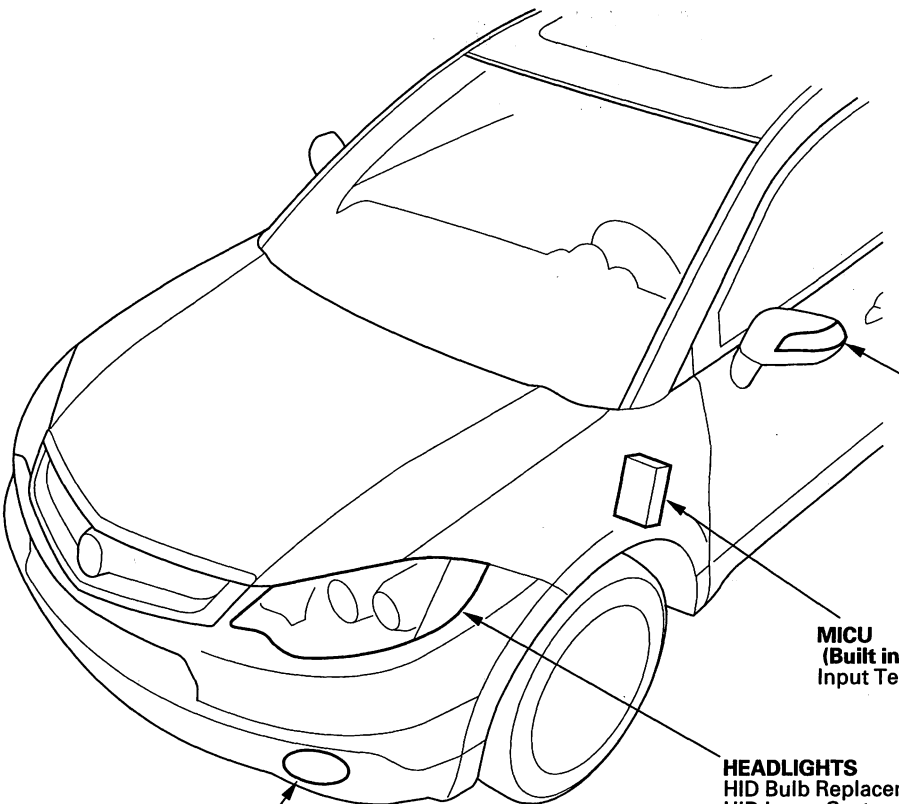

**SIDE TURN SIGNAL LIGHT (LED)**
Replacement, page 22-191

**MICU**
**(Built into the under-dash fuse/relay box)**
Input Test, page 22-107

**HEADLIGHTS**
HID Bulb Replacement, page 22-176
HID Lamp System Troubleshooting, page 22-168
Replacement, page 22-175
Adjustment, page 22-174
High Beam Bulb Replacement, page 22-176
**FRONT SIDE MARKER LIGHT**
Bulb Replacement, page 22-176
**FRONT PARKING/**
**TURN SIGNAL LIGHT**
Bulb Replacement, page 22-176

**FOG LIGHT**
Replacement, page 22-177
Adjustment, page 22-178



BACK

Protected by AR



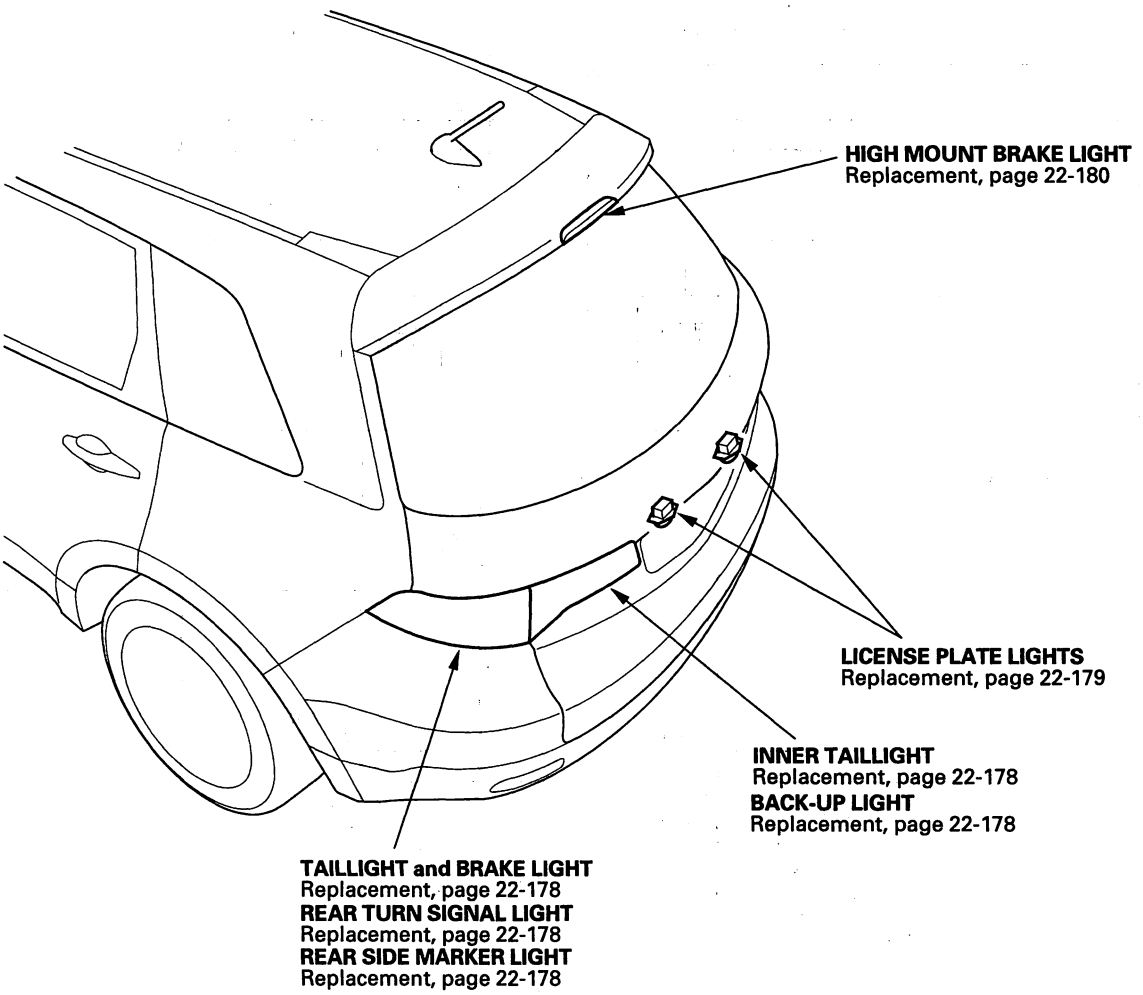

Protected by AR

# Exterior Lights

## Circuit Diagram

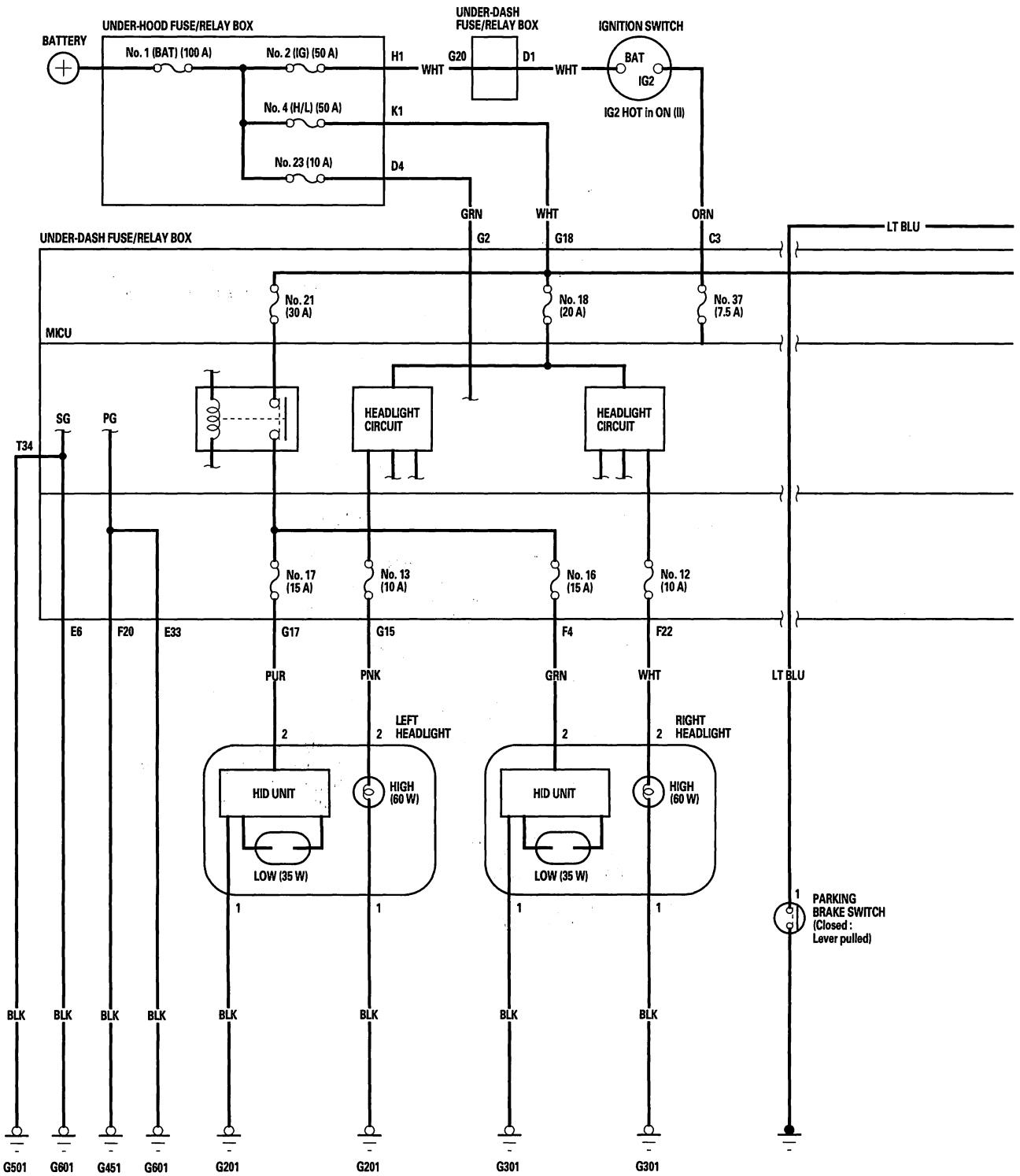




BACK

Protected by AR



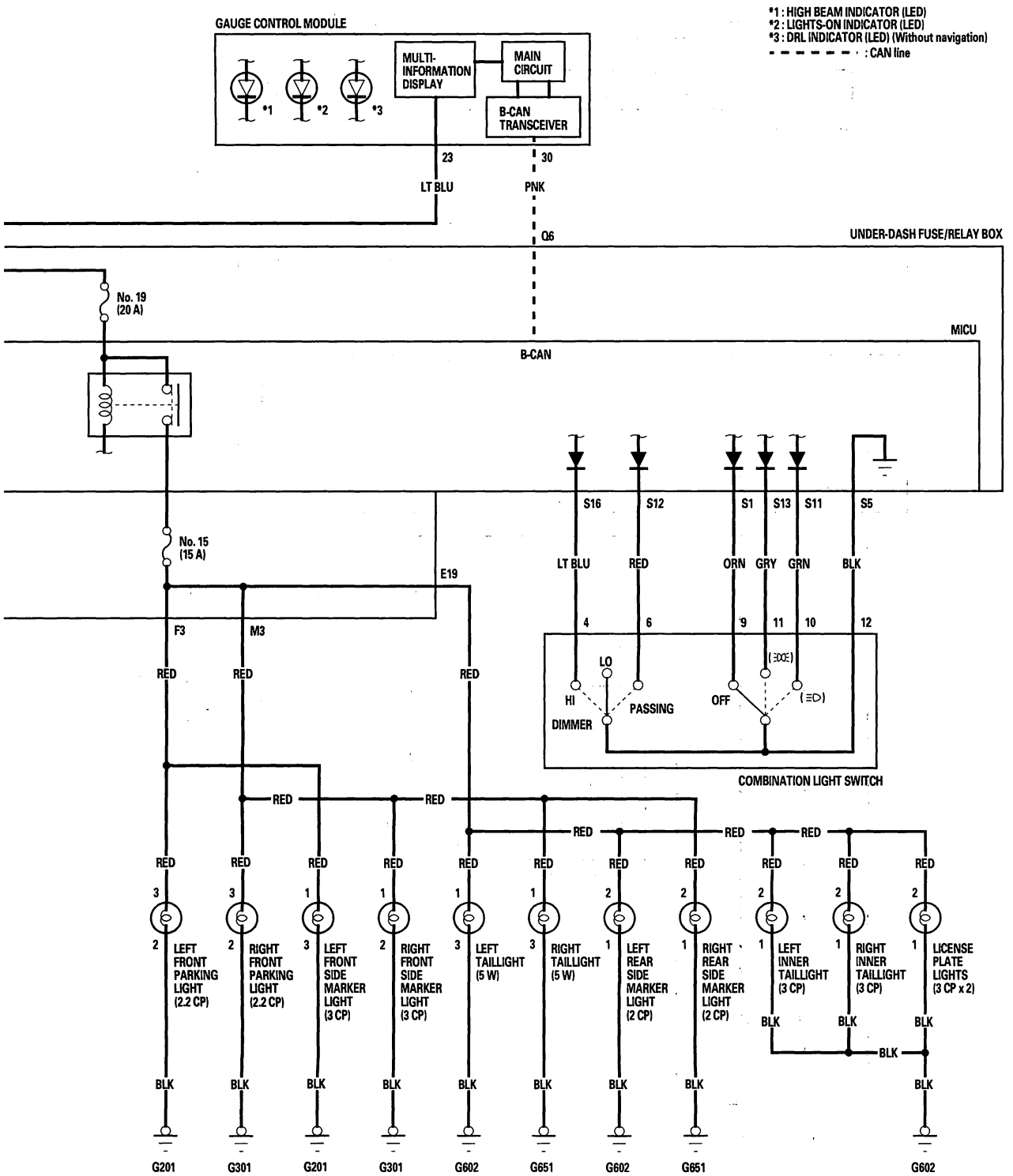


BACK

Protected by AR

# Exterior Lights

## Circuit Diagram - Fog Lights

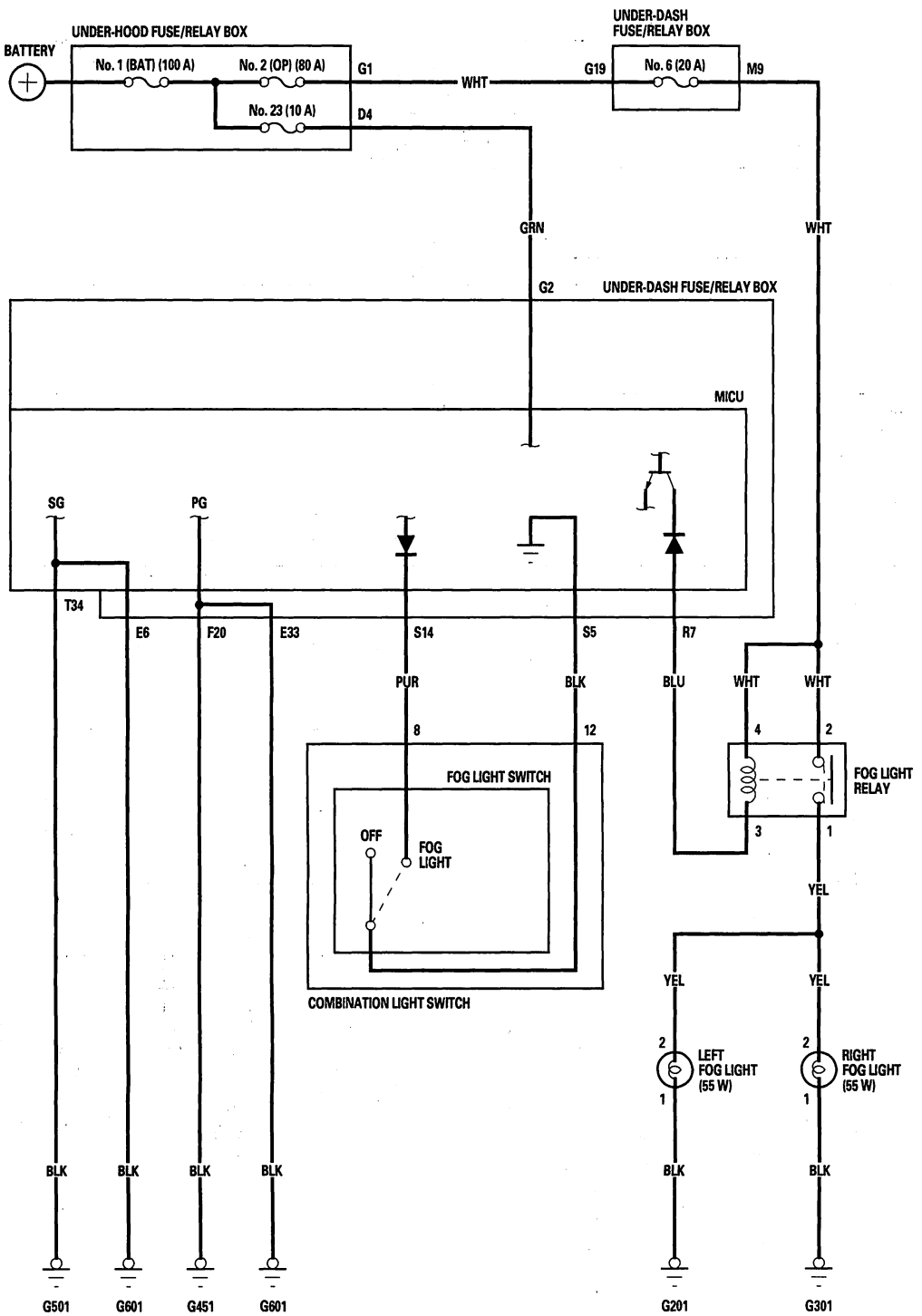




BACK

Protected by AR



## Circuit Diagram - Brake Lights

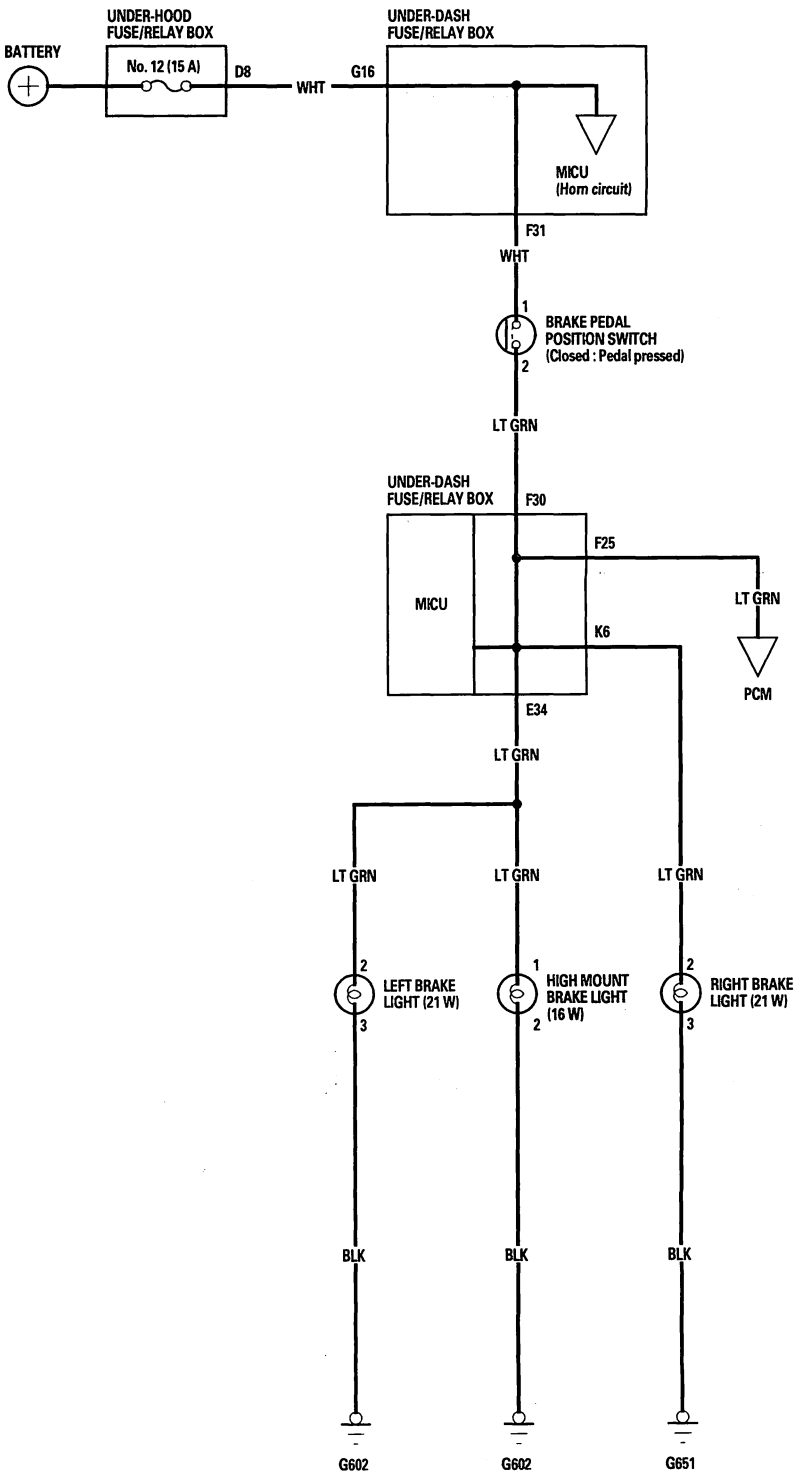

Protected by AR

# Exterior Lights

## Circuit Diagram - Back-up Lights

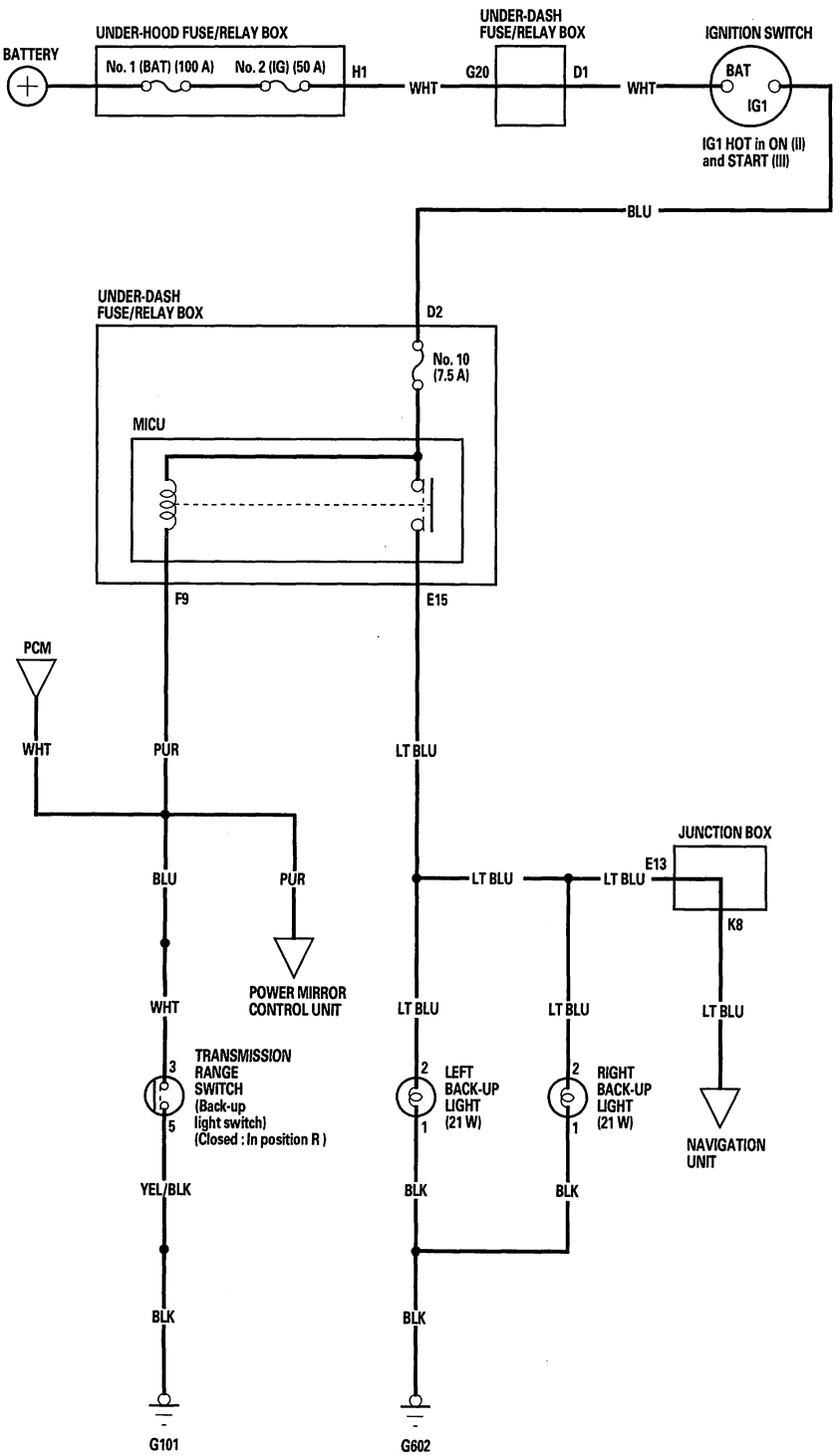




BACK

Protected by AR



## DTC Troubleshooting

### DTC B1078: Daytime Running Lights Signal Error (Canada)

### DTC B1079: Daytime Running Lights Signal Error (USA)

NOTE: If you are troubleshooting multiple DTCs, be sure to follow the instructions in B-CAN System Diagnosis Test Mode A (see page 22-88).

1. Turn the ignition switch ON (II).
2. Pull the parking brake lever.
3. Clear the DTCs with the HDS.
4. Release the parking brake lever.
5. Turn the ignition switch OFF, and then back ON (II).
6. Check for DTCs with the HDS.

   *Is DTC B1078 (Canada) or B1079 (USA) indicated?*

   **YES**—Go to step 7.

   **NO**—Intermittent failure. The daytime running lights system is OK at this time. Check for loose or poor connections.■

7. Turn the headlight switch ON (high beam).

   *Do both headlights (high beam) come on?*

   **YES**—Go to step 8.

   **NO**—Go to step 10.

8. Turn the ignition switch OFF.
9. Check the voltage between the No. 6 and No. 33 terminals of the under-dash fuse/relay box connector E (42P) and body ground, and between the No. 20 terminal of the under-dash fuse/relay box connector F (34P) and body ground individually.

**UNDER-DASH FUSE/RELAY BOX CONNECTOR E (42P)**

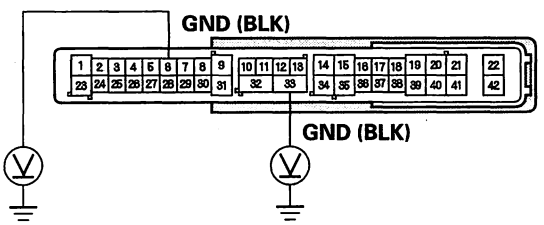


Wire side of female terminals

**UNDER-DASH FUSE/RELAY BOX CONNECTOR F (34P)**

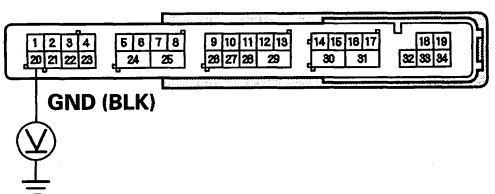


Wire side of female terminals

*Is there less than 0.5 V?*

**YES**—Faulty MICU; replace the under-dash fuse/relay box.■

**NO**—Repair an open in the BLK wire or poor ground (G451, G601).■

10. Turn the ignition and headlight switches OFF.

(cont'd)

Protected by AR



## DTC Troubleshooting (cont'd)

11. Check the No. 12, No. 13, and No. 18 fuses in the under-dash fuse/relay box.

    *Are all fuses OK?*

    **YES**—Go to step 12.

    **NO**—Replace the blown fuse and recheck. If the No. 18 (20 A) fuse is blown again, replace the under-dash fuse/relay box. If the No. 12 (10 A) or No. 13 (10 A) fuse is blown again, repair a short in the wire between the under-dash fuse/relay box and the appropriate headlight (high beam). ■

12. Check the headlight (high beam) bulbs.

    *Are the headlight (high beam) bulbs OK?*

    **YES**—Go to step 13.

    **NO**—Replace the faulty bulb. ■

13. Disconnect the under-dash fuse/relay box connectors F (34P) and G (21P).

14. Disconnect both of the headlight (high beam) 2P connectors.

15. Check for continuity between the No. 2 terminal of the right headlight (high beam) 2P connector and No. 22 terminal of the under-dash fuse/relay box connector F (34P).

**UNDER-DASH FUSE/RELAY BOX CONNECTOR F (34P)**
Wire side of female terminals

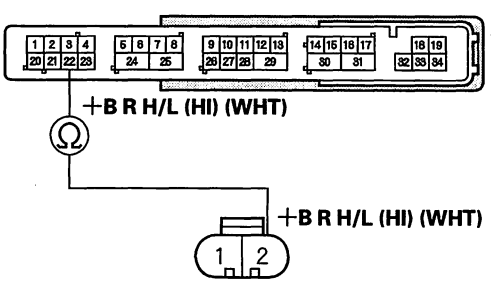


**RIGHT HEADLIGHT (HIGH BEAM) 2P CONNECTOR**
Wire side of female terminals

*Is there continuity?*

**YES**—Go to step 16.

**NO**—Repair an open in the wire between the right headlight (high beam) and the under-dash fuse/relay box. ■

16. Check for continuity between the No. 2 terminal of the left headlight (high beam) 2P connector and No. 15 terminal of the under-dash fuse/relay box connector G (21P).

**UNDER-DASH FUSE/RELAY BOX CONNECTOR G (21P)**
Wire side of female terminals

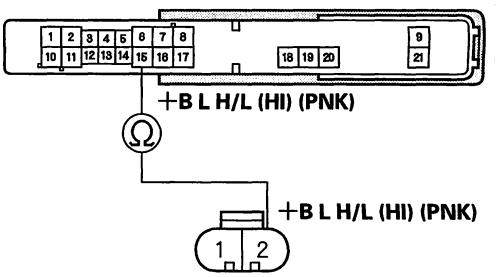


**LEFT HEADLIGHT (HIGH BEAM) 2P CONNECTOR**
Wire side of female terminals

*Is there continuity?*

**YES**—Go to step 17.

**NO**—Repair an open in the wire between the left headlight (high beam) and the under-dash fuse/relay box. ■

17. Check for continuity between the No. 1 terminal of each headlight (high beam) 2P connector and body ground.

**HEADLIGHT (HIGH BEAM) 2P CONNECTOR**

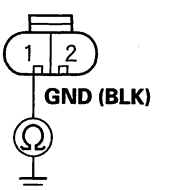


Wire side of female terminals

*Is there continuity?*

**YES**—Faulty MICU; replace the under-dash fuse/relay box. ■

**NO**—Repair an open in the BLK wire or poor ground (G201-left side, G301-right side). ■



BACK

Protected by AR



## DTC B1275: Combination Light Switch OFF Position Circuit Malfunction

## DTC B1276: Combination Light Switch Parking (SMALL) Position Circuit Malfunction

## DTC B1278: Headlight Switch ON Position Circuit Malfunction

NOTE: If you are troubleshooting multiple DTCs, be sure to follow the instructions in B-CAN System Diagnosis Test Mode A (see page 22-88).

1. Clear the DTCs with the HDS.

2. Turn the ignition switch OFF, and then back ON (II).

3. Turn the combination light switch to the park position, headlight position, then back to the off position.

4. Clear the DTCs with the HDS.

   *Is DTC B1275, B1276 or B1278 indicated?*

   **YES**—Go to step 5.

   **NO**—Intermittent failure. The lighting system is OK at this time. Check for loose or poor connections.■

5. Select LIGHTING from the BODY ELECTRICAL menu, and enter the DATA LIST.

6. Check the ON/OFF information of the HEADLIGHT SWITCH (OFF), HEADLIGHT SWITCH (PARKING) and HEADLIGHT SWITCH (HEADLIGHT).

   *Are the HEADLIGHT SWITCH (OFF) information indicator ON, HEADLIGHT SWITCH (PARKING) information indicator OFF and HEADLIGHT SWITCH (HEADLIGHT) information indicator OFF with the combination light switch in OFF position, and are the HEADLIGHT SWITCH (OFF) information indicator OFF, HEADLIGHT SWITCH (PARKING) information indicator ON and HEADLIGHT SWITCH (HEADLIGHT) information indicator OFF with the combination light switch in SMALL position, and are the HEADLIGHT SWITCH (OFF) information indicator OFF, HEADLIGHT SWITCH (PARKING) information indicator OFF and HEADLIGHT SWITCH (HEADLIGHT) information indicator ON with the combination light switch in ON position?*

   **YES**—Check for loose or poor connections connector. If all the connector tests prove OK, replace the under-dash fuse/relay box.■

   **NO**—Go to step 7.

7. Disconnect the 12P connector from the combination light switch.

8. Check the ON/OFF information of the HEADLIGHT SWITCH (OFF), HEADLIGHT SWITCH (PARKING) and HEADLIGHT SWITCH (HEADLIGHT) in the DATA LIST.

   *All the information indicators OFF?*

   **YES**—Go to step 12.

   **NO**—Go to step 9.

9. Turn the ignition switch OFF.

10. Disconnect the under-dash fuse/relay box connector S (20P).

(cont'd)

Protected by AR



## DTC Troubleshooting (cont'd)

11. Check the continuity between the body ground and under-dash fuse/relay box connector S (20P) terminals No. 1, No. 11, and No. 13 individually.

**UNDER-DASH FUSE/RELAY BOX CONNECTOR S (20P)**

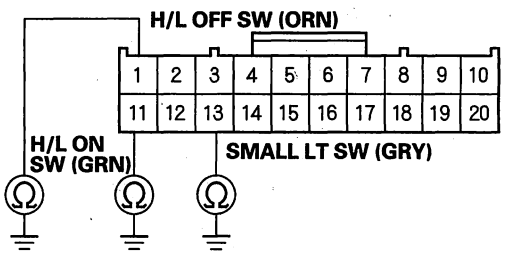


Wire side of female terminals

*Is there continuity?*

**YES**—Repair a short to ground in the wire.■

**NO**—Faulty MICU; replace the under-dash fuse/relay box.■

12. Turn the ignition switch OFF.

13. Check the combination light switch (see page 22-167).

*Is the combination light switch OK?*

**YES**—Go to step 14.

**NO**—Faulty combination light switch; replace it.■

14. Disconnect the under-dash fuse/relay box connectors S (20P).

15. Check for continuity between the under-dash fuse/relay box connector S (20P) No. 1, No. 5, No. 11, and No. 13 terminals and the combination light switch 12P connector No. 9, No. 12, No. 10, and No. 11 terminals.

**COMBINATION LIGHT SWITCH 12P CONNECTOR**
Wire side of female terminals

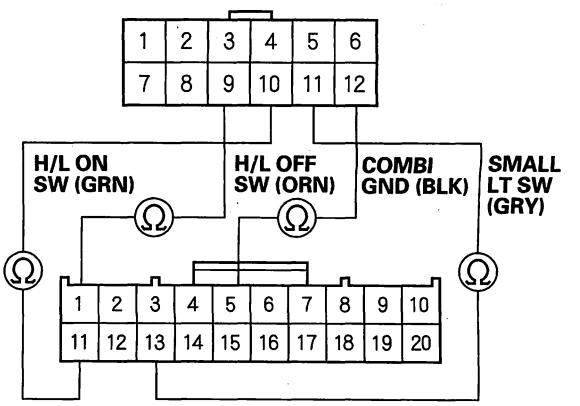


**UNDER-DASH FUSE/RELAY BOX CONNECTOR S (20P)**
Wire side of female terminals

*Is there continuity?*

**YES**—Faulty MICU; replace the under-dash fuse/relay box.■

**NO**—Repair an open in the wire.■



BACK

Protected by AR



## DTC B1279: Headlight Switch DIMMER Position Circuit Malfunction

NOTE: If you are troubleshooting multiple DTCs, be sure to follow the instructions in B-CAN System Diagnosis Test Mode A (see page 22-88).

1. Clear the DTCs with the HDS.
2. Turn the ignition switch OFF, and then back ON (II).
3. Turn the combination light switch ON.
4. Change the DIMMER switch from low beam to high beam.
5. Turn the combination light switch OFF, and then PASSING position.
6. Check the DTCs with the HDS.

   *Is DTC B1279 indicated?*

   **YES**—Go to step 7.

   **NO**—Intermittent failure. The lighting system is OK at this time. Check for loose or poor connections.■

7. Select LIGHTING from the BODY ELECTRICAL menu, and enter the DATA LIST.
8. Check the ON/OFF information of the HEADLIGHT SWITCH (HEADLIGHT), HEADLIGHT SWITCH (HIGH BEAM) and HEADLIGHT SWITCH (PASSING).

   *Are the HEADLIGHT SWITCH (HIGH BEAM) information indicator ON, HEADLIGHT SWITCH (PASSING) information indicator ON with the combination light switch in DIMMER position, and are the HEADLIGHT SWITCH (HEADLIGHT) information indicator OFF, HEADLIGHT SWITCH (HIGH BEAM) information indicator OFF and HEADLIGHT SWITCH (PASSING) information indicator OFF with the combination light switch in ON position?*

   **YES**—Faulty MICU; replace the under-dash fuse/relay box.■

   **NO**—Go to step 9.

9. Disconnect the 12P connector from the combination light switch.
10. Check the ON/OFF information of the HEADLIGHT SWITCH (HEADLIGHT), HEADLIGHT SWITCH (HIGH BEAM) and HEADLIGHT SWITCH (PASSING) in the DATA LIST.

    *All the information indicators OFF?*

    **YES**—Go to step 14.

    **NO**—Go to step 11.

11. Turn the ignition switch OFF.
12. Disconnect the under-dash fuse/relay box connector S (20P).
13. Check for continuity between the body ground and under-dash fuse/relay box connector S (20P) terminals No. 11, No. 12, and No. 16 individually.

**UNDER-DASH FUSE/RELAY BOX CONNECTOR S (20P)**

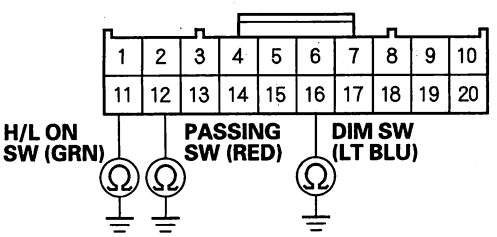


Wire side of female terminals

*Is there continuity?*

**YES**—Repair a short to ground in the wire.■

**NO**—Faulty MICU; replace the under-dash fuse/relay box.■

(cont'd)

Protected by AR



## DTC Troubleshooting (cont'd)

14. Turn the ignition switch OFF.

15. Check the combination light switch (see page 22-167).

    *Is the combination light switch OK?*

    **YES**—Go to step 16.

    **NO**—Faulty combination light switch; replace it. ■

16. Disconnect the under-dash fuse/relay box connectors S (20P).

17. Check for continuity between the under-dash fuse/relay box connector S (20P) No. 5, No. 11, No. 12, and No. 16 terminals and the combination light switch 12P connector No. 12, No. 10, No. 6, and No. 4 terminals.

**UNDER-DASH FUSE/RELAY BOX CONNECTOR S (20P)**
Wire side of female terminals

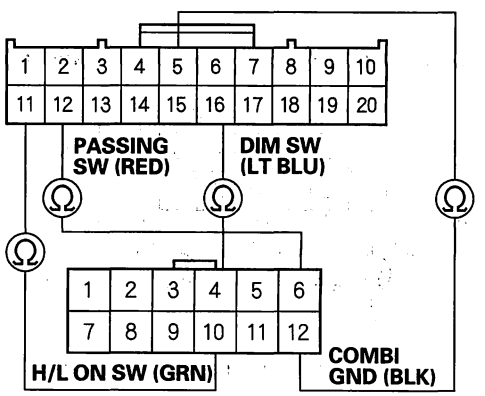


**COMBINATION LIGHT SWITCH 12P CONNECTOR**
Wire side of female terminals

*Is there continuity?*

**YES**—Faulty MICU; replace the under-dash fuse/relay box. ■

**NO**—Repair an open in the wire. ■



BACK

Protected by AR



## MICU Input Test

NOTE:
- The MICU turns on the headlights (high beams) in a dimming mode for the Daytime Running Lights under the following conditions:
  - With the ignition switch ON (II)
  - The headlight switch OFF
  - The parking brake is released (parking brake switch OFF)
- The DRL indicator will come when one of the headlight (high beams) bulbs is blown, or if the high beam wiring has an open circuit with the daytime running lights ON.
- For Canada models: If the vehicle is equipped with an optional remote control engine start system, the daytime running lights will not function when started with the remote start.

1. Before troubleshooting the lighting system, troubleshoot the B-CAN System Diagnosis Test Mode A (see page 22-88).

2. Check the No. 12 (10 A), No. 13 (10 A), No. 15 (15 A), No. 16 (15 A), No. 17 (15 A), No. 18 (20 A), No. 19 (20 A), No. 21 (30 A), and No. 37 (7.5 A) fuses in the under-dash fuse/relay box. If any fuse is blown, replace it and go to step 3.

3. Disconnect the under-dash fuse/relay box connectors E, F, G, M, R, S, and T.

   NOTE: All connector views are shown from wire side of female terminals.

UNDER-DASH FUSE/RELAY BOX CONNECTOR E (42P)

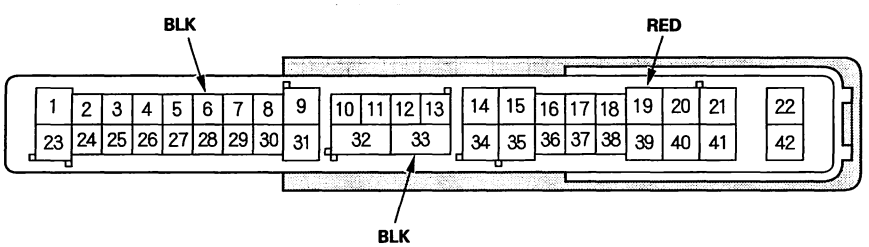


UNDER-DASH FUSE/RELAY BOX CONNECTOR F (34P)

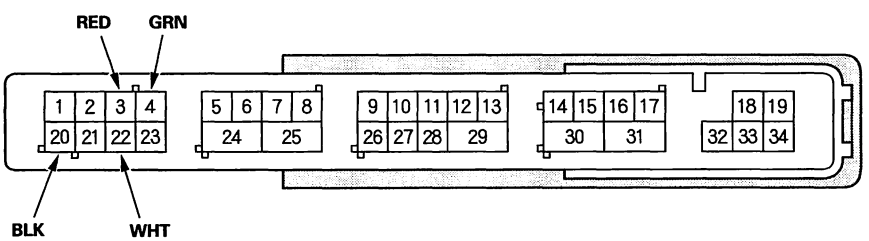


UNDER-DASH FUSE/RELAY BOX CONNECTOR G (21P)

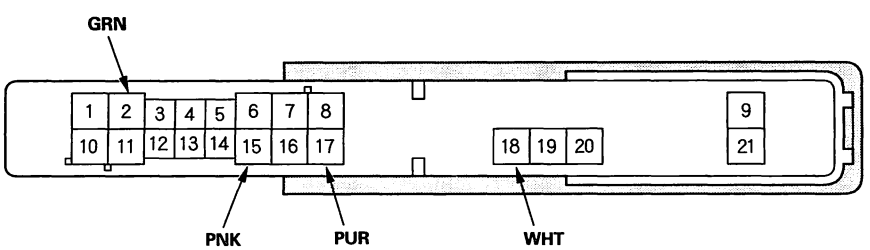


(cont'd)

Protected by AR



## MICU Input Test (cont'd)

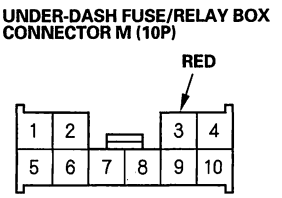


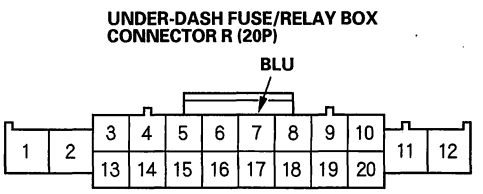


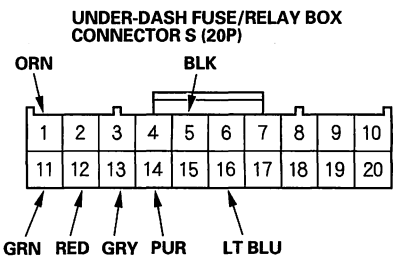


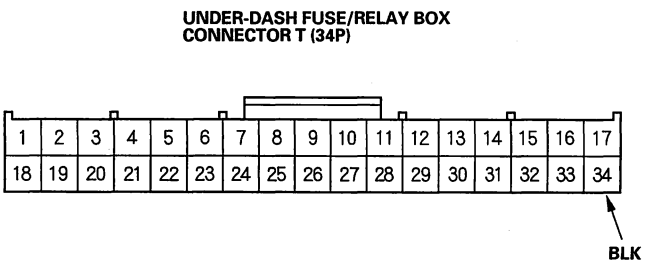


4. Inspect the connector and socket terminals to be sure they are all making good contact.

   - If the terminals are bent, loose or corroded, repair them as necessary and recheck the system.
   - If the terminals look OK, go to *step* 5.



BACK

Protected by AR



5. With the connector still disconnected, make these input tests at the appropriate connector.

- If any test indicates a problem, find and correct the cause, then recheck the system.
- If all the input tests prove OK, go to step 6.

| Cavity | Wire | Test condition | Test: Desired result | Possible cause if result is not obtained |
|---|---|---|---|---|
| E19 | RED | Under all conditions | Connect battery power to the E19 terminal:<br>The left taillight, right rear side marker light, inner taillights, and license plate lights should come on. | • Poor ground (G602)<br>• Blown bulb<br>• An open in the wire |
| F3 | RED | Under all conditions | Connect battery power to the F3 terminal:<br>The left front parking light and left front side marker light should come on. | • Poor ground (G201)<br>• Blown bulb<br>• An open in the wire |
| F4 | GRN | Under all conditions | Connect battery power to the F4 terminal:<br>The right headlight (low beam) should come on. | • Poor ground (G301)<br>• Blown bulb<br>• Faulty HID unit<br>• An open in the wire |
| F22 | WHT | Under all conditions | Connect battery power to the F22 terminal:<br>The right headlight (high beam) should come on. | • Poor ground (G301)<br>• Blown bulb<br>• An open in the wire |
| G15 | PNK | Under all conditions | Connect battery power to the G15 terminal:<br>The left headlight (high beam) should come on. | • Poor ground (G201)<br>• Blown bulb<br>• An open in the wire |
| G17 | PUR | Under all conditions | Connect battery power to the G17 terminal:<br>The left headlight (low beam) should come on. | • Poor ground (G201)<br>• Blown bulb<br>• An open in the wire |
| M3 | RED | Under all conditions | Connect battery power to the M3 terminal:<br>The right front parking light, right front side marker light, right taillight, and right rear side marker light should come on. | • Poor ground (G301 and G651)<br>• Blown bulb<br>• An open in the wire |

(cont'd)

Protected by AR



## MICU Input Test (cont'd)

6. Reconnect the connectors to the under-dash fuse/relay box, and make these input tests at the connectors.
   - If any test indicates a problem, find and correct the cause, then recheck the system.
   - If all the input tests prove OK, the MICU must be faulty; replace the under-dash fuse/relay box.

| Cavity | Wire | Test condition | Test: Desired result | Possible cause if result is not obtained |
|---|---|---|---|---|
| G2 | GRN | Under all conditions | Check for voltage between G2 terminal and body ground: There should be battery voltage. | • Blown No. 23 (10 A) fuse in the under-hood fuse/relay box<br>• An open in the wire |
| G18 | WHT | Under all conditions | Check for voltage between G18 terminal and body ground: There should be battery voltage. | • Blown No. 4 (50 A) fuse in the under-hood fuse/relay box<br>• An open in the wire |
| E6 | BLK | Under all conditions | Check for voltage to ground: There should be less than 0.5 V. | • Poor ground (G601)<br>• An open in the wire |
| E33 | BLK | Under all conditions | Check for voltage to ground: There should be less than 0.5 V. | • Poor ground (G601)<br>• An open in the wire |
| F20 | BLK | Under all conditions | Check for voltage to ground: There should be less than 0.5 V. | • Poor ground (G451)<br>• An open in the wire |
| T34 | BLK | Under all conditions | Check for voltage to ground: There should be less than 0.5 V. | • Poor ground (G501)<br>• An open in the wire |
| R7 | BLU | Under all conditions | Connect body ground to the R7 terminal: The fog lights should come on. | • Blown No. 6 (20 A) fuse in the under-dash fuse/relay box<br>• Faulty fog light relay<br>• Blown bulb<br>• An open in the wire |
| S1 | ORN | Combination light switch OFF | Check for voltage between S1 and S5 terminals: There should be less than 1 V. | • Faulty combination light switch<br>• An open in the wire |
| | | Combination light switch in any other position than OFF | Check for voltage between S1 and S5 terminals: There should be 5 V or more. | • Faulty combination light switch<br>• A short to ground in the wire |
| S11 | GRN | Combination light switch (Headlight position) ON | Check for voltage between S11 and S5 terminals: There should be less than 1 V. | • Faulty combination light switch<br>• An open in the wire |
| | | Combination light switch OFF | Check for voltage between S11 and S5 terminals: There should be 5 V or more. | • Faulty combination light switch<br>• A short to ground in the wire |
| S12 | RED | Combination light switch lever pulled (Passing) | Check for voltage between S12 and S5 terminals: There should be less than 1 V. | • Faulty combination light switch<br>• An open in the wire |
| | | Combination light switch lever released from passing position | Check for voltage between S12 and S5 terminals: There should be 5 V or more. | • Faulty combination light switch<br>• A short to ground in the wire |
| S13 | GRY | Combination light switch (SMALL position) ON | Check for voltage between S13 and S5 terminals: There should be less than 1 V. | • Faulty combination light switch<br>• An open in the wire |
| | | Combination light switch OFF | Check for voltage between S13 and S5 terminals: There should be 5 V or more. | • Faulty combination light switch<br>• A short to ground in the wire |
| S16 | LT BLU | Combination light switch (Dimmer) in high beam position | Check for voltage between S16 and S5 terminals: There should be less than 1 V. | • Faulty combination light switch<br>• An open in the wire |
| | | Combination light switch (Dimmer) in low beam position | Check for voltage between S16 and S5 terminals: There should be 5 V or more. | • Faulty combination light switch<br>• A short to ground in the wire |
| S14 | PUR | Combination light switch (Fog light position) ON | Check for voltage between S14 and S5 terminals: There should be less than 1 V. | • Faulty combination light switch<br>• An open in the wire |
| | | Combination light switch OFF | Check for voltage between S14 and S5 terminals: There should be 5 V or more. | • Faulty combination light switch<br>• A short to ground in the wire |



BACK

Protected by AR



## Combination Light Switch Test/Replacement

1. Remove the steering column covers (see page 20-107).

2. Disconnect the 12P connector (A) from the combination light switch (B).

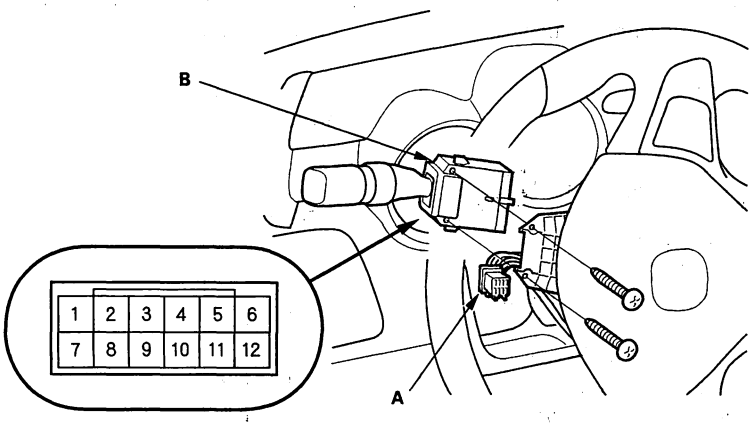


3. Remove the two screws, then slide out the combination light switch.

4. Inspect the connector terminals to be sure they are all making good contact.

   - If the terminals are bent, loose or corroded, repair them as necessary, and recheck the system.
   - If the terminals look OK, check for continuity between the terminals in each switch position according to the tables.
     – If the continuity is not as specified, replace the switch.

**Light switch:**

| Position \ Terminal | | | 4 | 6 | 9 | 10 | 11 | 12 |
|---|---|---|---|---|---|---|---|---|
| Headlight switch | OFF | | | | ○ | | | ○ |
| | | | | | | | ○ | ○ |
| | | LOW | | | | ○ | | ○ |
| | | HIGH | ○ | | | ○ | | ○ |
| Passing switch | OFF | | | | | | | |
| | ON | | | ○ | | | | ○ |

**Turn signal switch:**

| Position \ Terminal | 1 | 2 | 12 |
|---|---|---|---|
| LEFT | | ○ | ○ |
| Neutral | | | |
| RIGHT | ○ | | ○ |

**Fog light switch:**

| Position \ Terminal | 8 | 12 |
|---|---|---|
| ON | ○ | ○ |
| OFF | | |

Protected by AR



## HID Lamp System Troubleshooting

**⚠WARNING**

A transient high tension (25,000 V) occurs at the bulb sockets or the high intensity discharge (HID) lamps when the combination light switch is turned ON, it may cause serious electrical shock or electrocution if you do not observe the cautions below.

**⚠CAUTION**

- Never turn on the combination light switch before fitting the HID bulbs to their bulb sockets and completing the reassembly of the headlight assembly.
- Do not service the headlights assembly in wet conditions, such as rain or snow, near a sprinkler system, or when your hands are wet to prevent electrocution.
- Do not touch the surface of the HID bulbs with your bare hands and do not stain it with any oils and fats.
- Do not disassemble the inverter unit and the ignitor unit.
- Do not turn on the HID bulb by using a power source other than the battery mounted on your vehicle.

NOTE: Before troubleshooting the HID Lamp System, perform the multiplex integrated control system troubleshooting using B-CAN System Diagnosis Test Mode A (see page 22-88).

1. Check the No. 17 (15 A) and No. 16 (15 A) fuses in the under-dash fuse/relay box.

   *Are the fuses OK?*

   **YES**—Go to step 2.

   **NO**—Replace the fuse(s), and recheck.■

2. Make sure you have the anti-theft code for the audio system and the navigation system (if equipped), then write down the audio presets. Make sure the ignition switch is OFF.

3. Turn the combination light switch OFF.

4. Disconnect the negative battery cable, then disconnect the positive cable.

5. Remove the bulb socket from the HID bulb (see page 22-172).

6. Check for discoloration and deformation of the light emitting part of the bulb.

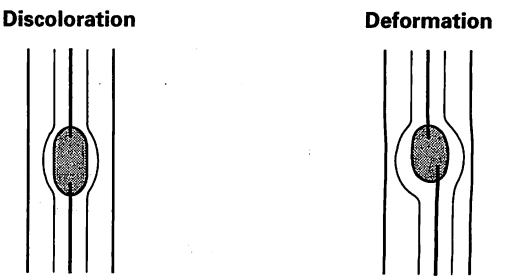


   *Is the bulb discolored and/or deformed?*

   **YES**—Replace the HID bulb, and recheck.■

   **NO**—Go to step 7.

7. Check for discoloration, deformation, and traces of abnormal discharge at the socket mating part.

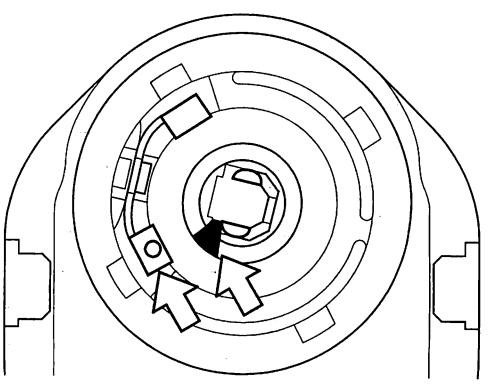

   *Is the socket normal?*

   **YES**—Go to step 8.

   **NO**—Replace the socket, and recheck.■



BACK

Protected by AR



8. Exchange the HID bulb from the problem headlight with one from another headlight.

9. Reconnect the positive battery cable, then connect the negative cable.

10. *Turn the combination light switch ON.*

    *Does the headlight come on?*

    **YES**—Replace the HID bulb, and recheck. ■

    **NO**—Go to step 11.

11. Disconnect the 2P connector from the HID unit.

12. Check for continuity between the No. 1 terminal of the HID unit 2P connector and body ground.

**HID UNIT 2P CONNECTOR**

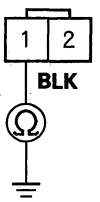


Wire side of female terminals

*Is there continuity?*

**YES**—Go to step 13.

**NO**—Repair an open in the wire between the HID unit and body ground. If the wire is OK, check for poor ground at G201 or G301. ■

NOTE: Enter the anti-theft code for the audio system and the navigation system (if equipped), then enter the audio presets.

(cont'd)

Protected by AR



## HID Lamp System Troubleshooting (cont'd)

13. Measure the voltage between the No. 2 terminal of the HID unit 2P connector and body ground.

**HID UNIT 2P CONNECTOR**

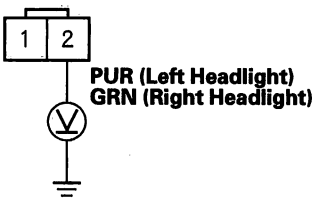


Wire side of female terminals

*Is there battery voltage?*

**YES**—Substitute a known good HID, and recheck. If the symptom/indication goes away, replace the original inverter unit. ■

**NO**—
- For the left headlight, go to step 14.
- For the right headlight, go to step 16.

14. Disconnect the under-dash fuse/relay box connector G (21P).

15. Check for continuity between the No. 17 terminal of the under-dash fuse/relay box connector G (21P) and the No. 2 terminal of the HID unit 2P connector.

**UNDER-DASH FUSE/RELAY BOX CONNECTOR G (21P)**
Wire side of female terminals

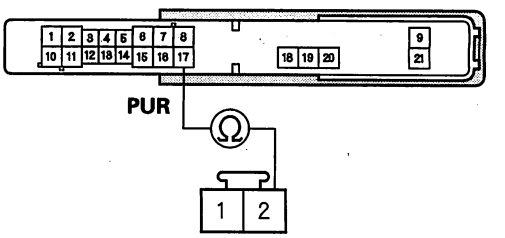


**HID UNIT 2P CONNECTOR (LEFT HEADLIGHT)**
Wire side of female terminals

*Is there continuity?*

**YES**—Replace the under-dash fuse/relay box. ■

**NO**—Repair an open in the wire between the under-dash fuse/relay box and the HID unit. ■



BACK

Protected by AR



16. Disconnect the under-dash fuse/relay box connector F (34P).

17. Check for continuity between the No. 4 terminal of the under-dash fuse/relay box connector F (34P) and the No. 2 terminal of the HID unit 2P connector.

**HID UNIT 2P CONNECTOR (RIGHT HEADLIGHT)**
Wire side of female terminals

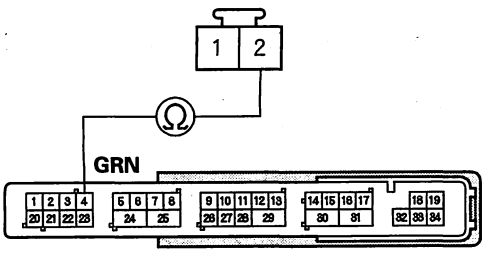


**UNDER-DASH FUSE/RELAY BOX CONNECTOR F (34P)**
Wire side of female terminals

*Is there continuity?*

**YES**—Replace the under-dash fuse/relay box.■

**NO**—Repair an open in the wire between the under-dash fuse/relay box and the HID unit.■

Protected by AR



## HID Bulb Replacement

**⚠WARNING**

A transient high tension (25,000 V) occurs at the bulb sockets of the high intensity discharge (HID) lamps when the combination light switch is turned ON, it may cause serious electrical shock or electrocution if you do not observe the cautions below.

**⚠CAUTION**

- Never turn on the combination light switch before fitting the HID bulbs to their bulb sockets and completing the reassembly of the headlight assembly.
- Do not service the headlights assembly in wet conditions, such as rain or snow, near a sprinkler system, or when your hands are wet to prevent electrocution.
- Do not touch the surface of the HID bulbs with your bare hands and do not stain it with any oils and fats.
- Do not disassemble the inverter unit and the ignitor unit.
- Do not turn on the HID bulb by using a power source other than the battery mounted on your vehicle.

1. Make sure you have the anti-theft code for audio system and navigation system (if equipped), then write down the audio presets. Make sure the ignition switch is OFF.
2. Turn the combination light switch OFF.
3. Disconnect the battery negative cable, then disconnect the positive cable.
4. Remove the headlight assembly (see page 22-175).
5. Turn the cover (A) 45 ° counterclockwise to remove it from the headlight assembly.

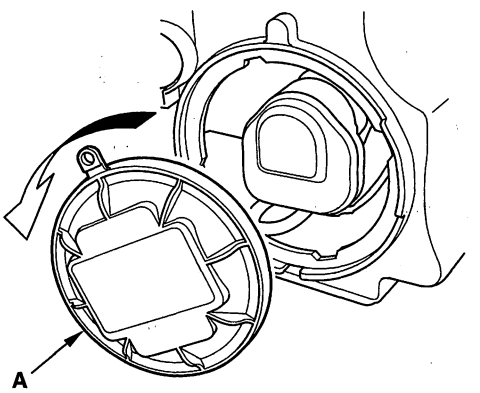




BACK

Protected by AR



6. Turn the socket (A) 45 ° counterclockwise to remove it from the bulb (B).

   **Headlight: 35 W**

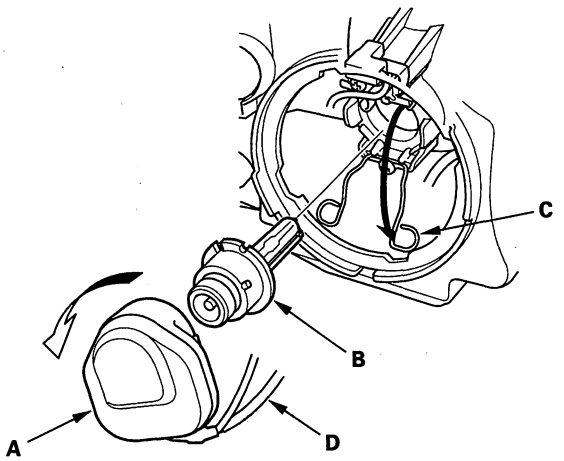


7. Pull the retaining spring (C) away from the bulb then remove the bulb.

8. Make sure the bulb harness (D) is routed correctly so it does not contact the reflector.

9. Install the new bulb in the reverse order of removal. Make sure the notches in the bulb align with the tabs in the headlight.

10. Enter the anti-theft code for the audio system and the navigation system(if equipped), then enter the audio presets.

11. Set the clock.

## HID Unit Replacement

1. Make sure you have anti-theft code for the audio system and the navigation system (if equipped), then write down the audio presets. Make sure the ignition switch is OFF.

2. Turn the combination light switch OFF.

3. Disconnect the battery negative cable, then disconnect the positive cable.

4. Remove the headlight assembly (see page 22-175).

5. Remove the bulb socket from the HID bulb (see page 22-172).

6. Remove the three mounting screws and HID unit (A).

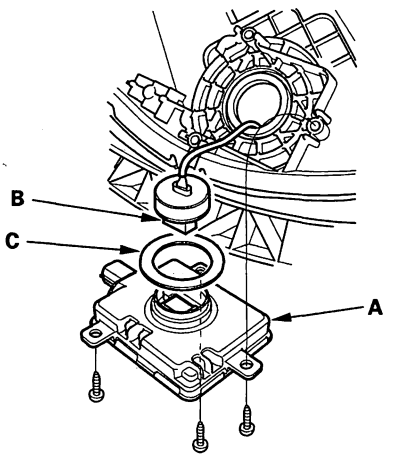


7. Disconnect the 4P connector (B) from the HID unit.

8. Inspect the gasket (C) for damage. If damaged, replace it.

9. Install in the reverse order of removal.

10. Enter the anti-theft code for the audio system and the navigation system (if equipped), then enter the audio presets.

11. Set the clock.

Protected by AR



## Headlight Adjustment

**⚠CAUTION**

Headlights become very hot during use; do not touch them or any attaching hardware immediately after they have been turned off.

Before adjusting the headlights:

- Park the vehicle on a level surface.
- Make sure the tire pressures are correct.
- The driver or someone who weighs the same should sit in the driver's seat.

1. Clean the outer lens so that you can see the center (A) of the headlights.

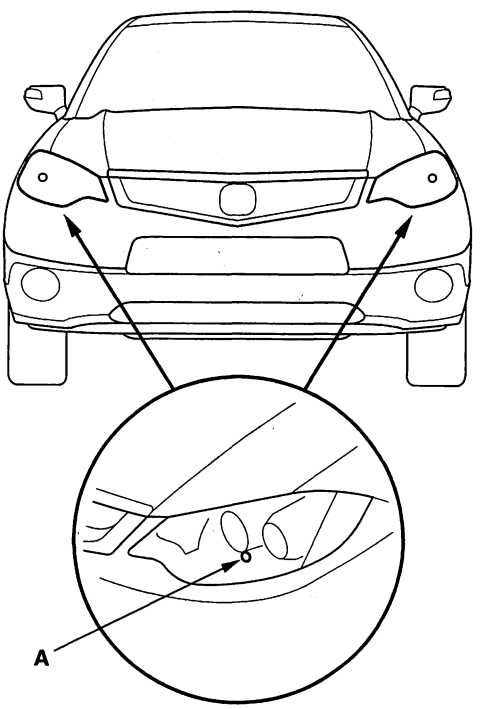


2. Park the vehicle in front of a wall or a screen (A).

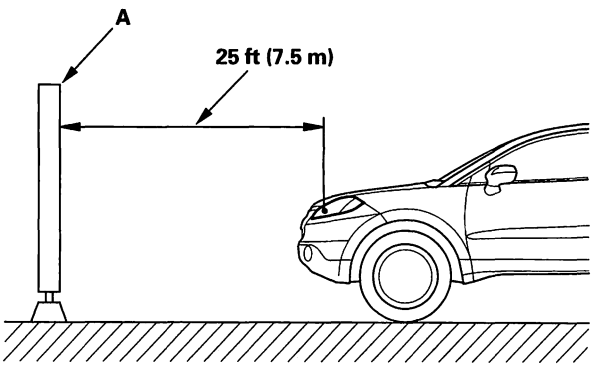


3. Turn the low beams on.

4. Determine if the headlights are aimed properly.

**Vertical adjustment:**
Measure the height of the headlights (A).
Adjust the cut line (B) to the lights height.

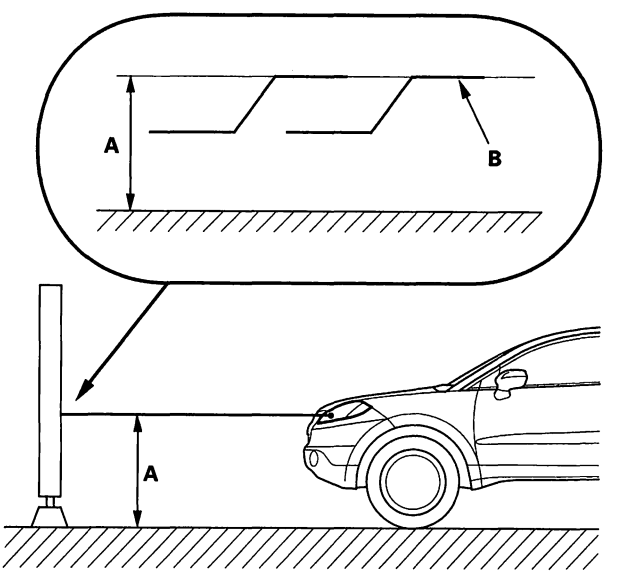




BACK

Protected by AR



5. If necessary, open the hood and adjust the headlights to local requirements by turning the vertical adjuster.

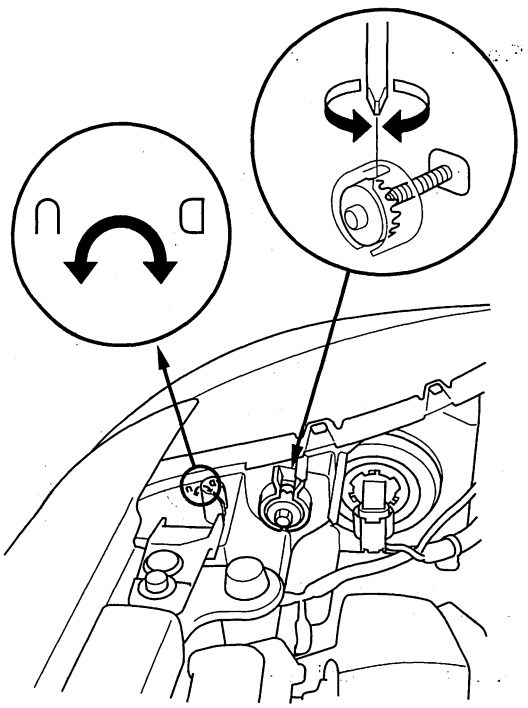

## Headlight Replacement

1. Remove the front bumper (see page 20-146).
2. Remove the connectors (A) from the headlight assembly (B).

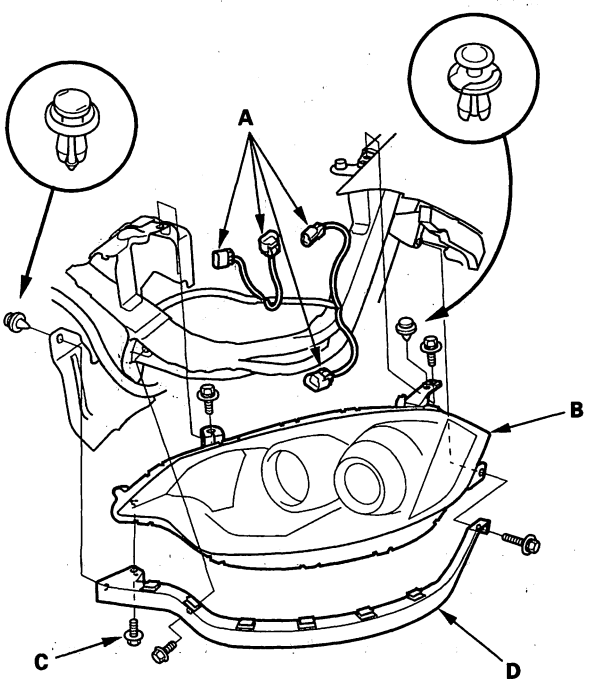


3. Remove the clips and bolts, then remove the headlight.
4. Remove the bolt (C) and the corner upper beam (D) from the headlight.
5. Install the headlight in the reverse order of removal.
6. After replacement, adjust the headlight to local requirement.

Protected by AR



## Bulb Replacement

### Headlight

1. Disconnect the 2P connector (A) from the headlight.

   **Headlight (high beam): 60 W**

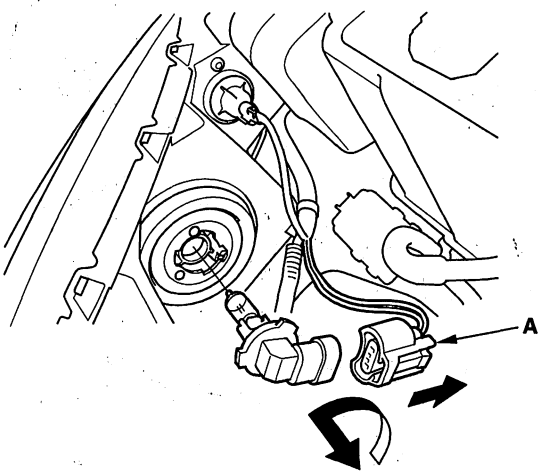


2. Turn the bulb socket 45 ° counterclockwise to remove the bulb.

3. Install a new bulb in the reverse order of removal.

### Front Parking/Turn Signal Lights

1. Disconnect the 3P connector (A) from the front parking/turn signal light.

   **Front Parking/Turn Signal Lights: 24/2.2 CP**

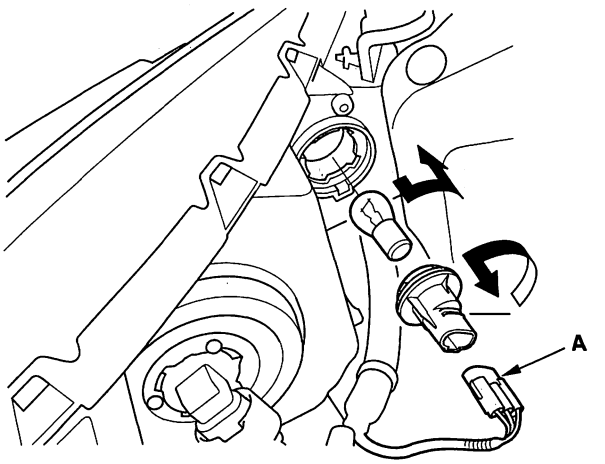


2. Turn the bulb socket 45 ° counterclockwise to remove the bulb.

3. Install a new bulb in the reverse order of removal.



BACK

Protected by AR



## Front Side Marker Light

1. Disconnect the 2P connector (A) from the front turn signal/front parking light.

   **Front Side Marker Light: 3 CP**

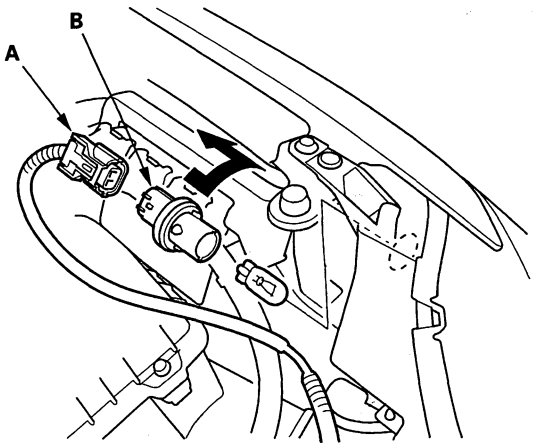


2. Turn the bulb socket (B) 45 °counterclockwise to remove it from the headlight housing.
3. Install a new bulb in the reverse order of removal.

## Fog Light Replacement

1. Remove the front bumper (see page 20-146).
2. Disconnect the 2P connector (A) from the fog light (B).

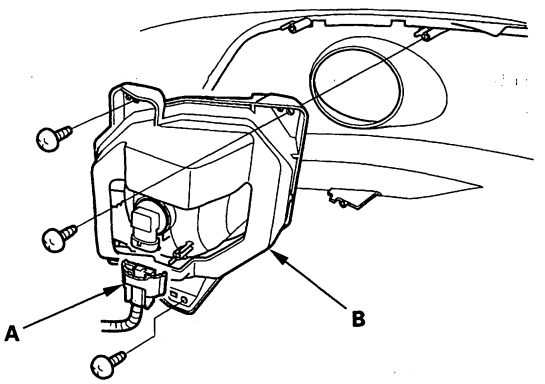


3. Remove the screws, then remove the fog light.
4. Turn the bulb socket (A) counterclockwise to remove it from the housing.

   **Fog Light: 55 W**

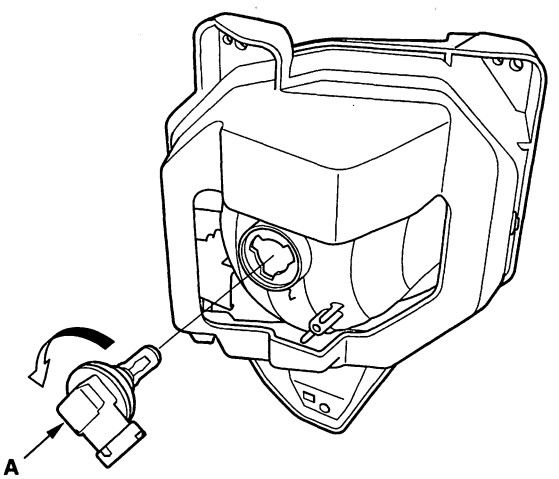


5. Install in the reverse order of removal.
6. After replacement, adjust the fog lights (see page 22-178).

Protected by AR



## Fog Light Adjustment

Before adjusting the fog lights:

- Park the vehicle on a level surface.
- Make sure the tire pressures are correct.
- The driver or someone who weighs the same should sit in the driver's seat.

Adjust the fog lights to local requirements by turning the adjuster (A).

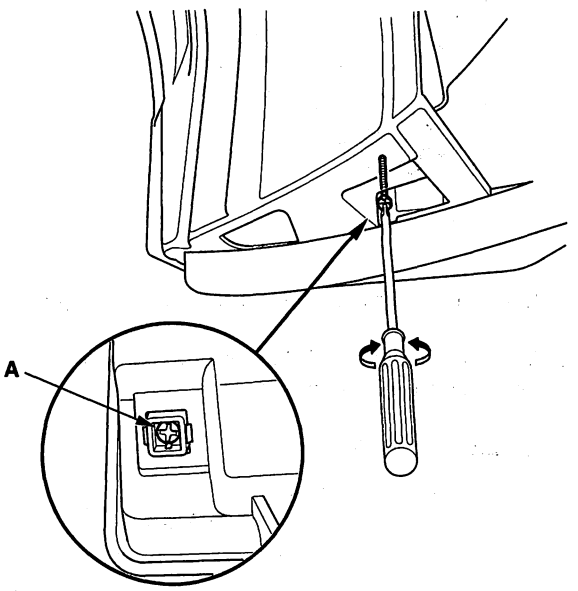


## Taillight Replacement

### Taillight

1. Remove the covers (A) and two bolts from the taillight (B).

| | |
|---|---|
| **Brake Lights/Taillight:** | **21/5 W** |
| **Rear Turn Signal Light:** | **21 W** |
| **Rear Side Maker Light:** | **2 CP** |

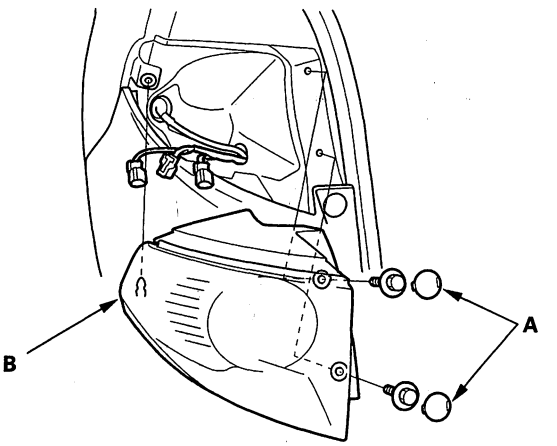


2. Carefully pull out the taillight.
3. Disconnect the connectors (A) from the taillight.

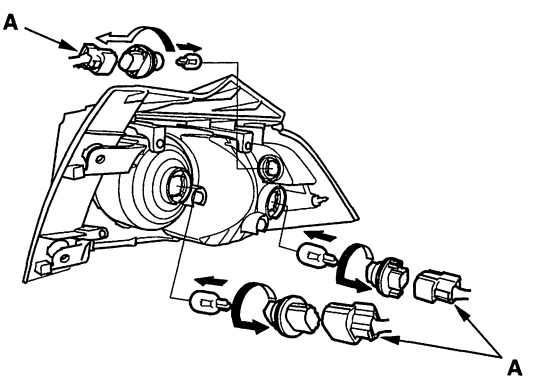


4. Turn the bulb socket 45 ° counterclockwise to remove the bulb.
5. Install the light in the reverse order of removal.



BACK

Protected by AR



## Inner Taillight

1. Remove the tailgate lid panel (see page 20-174).
2. Disconnect the 2P connectors (A) from the inner taillight.

   **Inner Taillight: 3 CP**
   **Back-up light: 21 W**

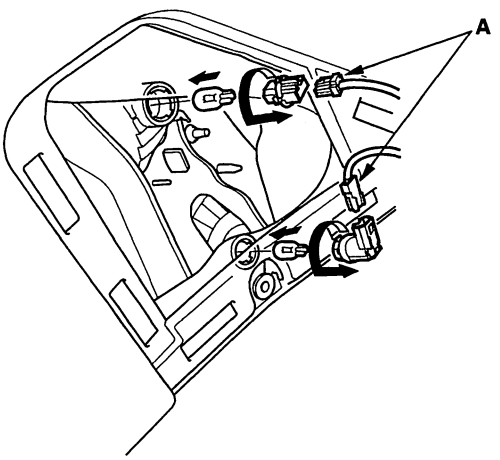


3. Turn the bulb socket 45 ° counterclockwise to remove the bulb.
4. Remove the four nuts and inner taillight

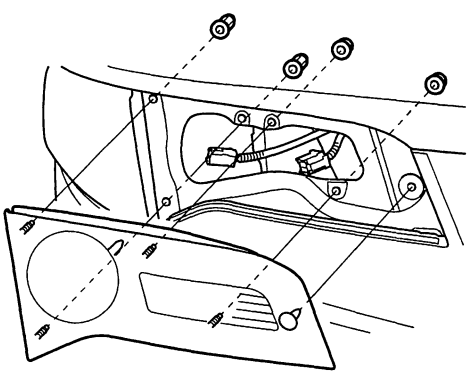

5. Install the inner taillight in the reverse order of removal.

## License Plate Light Replacement

1. Open the tailgate, and remove the rear license trim and the tailgate license panel (see page 20-173).
2. Disconnect the 2P connector (A) from the license plate light.

   **License Plate Light: 3 CP**

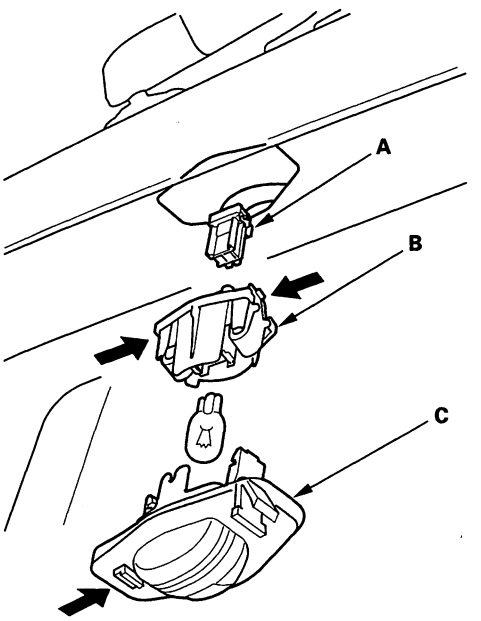


3. Release the bulb socket (B) from the lens (C) by pressing on the tabs.
4. Remove the lens from the tailgate by pressing on the tabs.
5. Install the light in the reverse order of removal.

BACK

Protected by AR



## High Mount Brake Light Replacement

1. Remove the covers (A) and two screws from the high mount brake light.

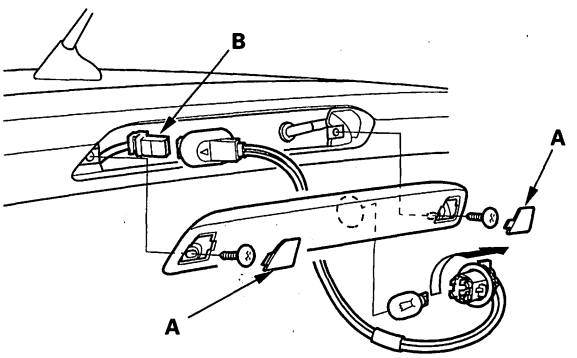


2. Disconnect the 2P connector (B) from the high mount brake light.

   **Bulb: 16 W**

3. Turn the bulb socket 45 ° counterclockwise to remove the bulbs.

4. Install the light in the reverse order of removal.

## Brake Pedal Position Switch Test

1. Disconnect the 4P connector (A) from the brake pedal position switch (B).

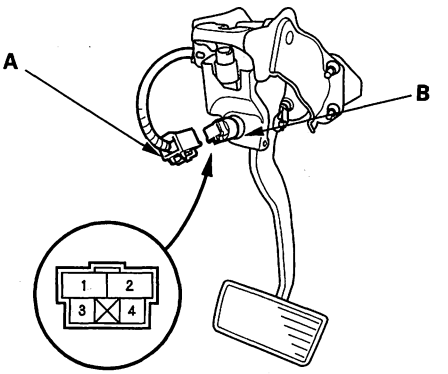


2. Check for continuity between the No. 1 and No. 2 terminals.

   - There should be continuity when the brake pedal is pressed.
   - There should be no continuity when the brake pedal is released.

3. Check for continuity between the No. 3 and No. 4 terminals (with cruise control).

   - There should be no continuity when the brake pedal is pressed.
   - There should be continuity when the brake pedal is released.

4. If necessary, adjust or replace the switch, or adjust the pedal height (see page 19-6).



BACK

Protected by AR



# Turn Signal/Hazard Flasher

## Component Location Index

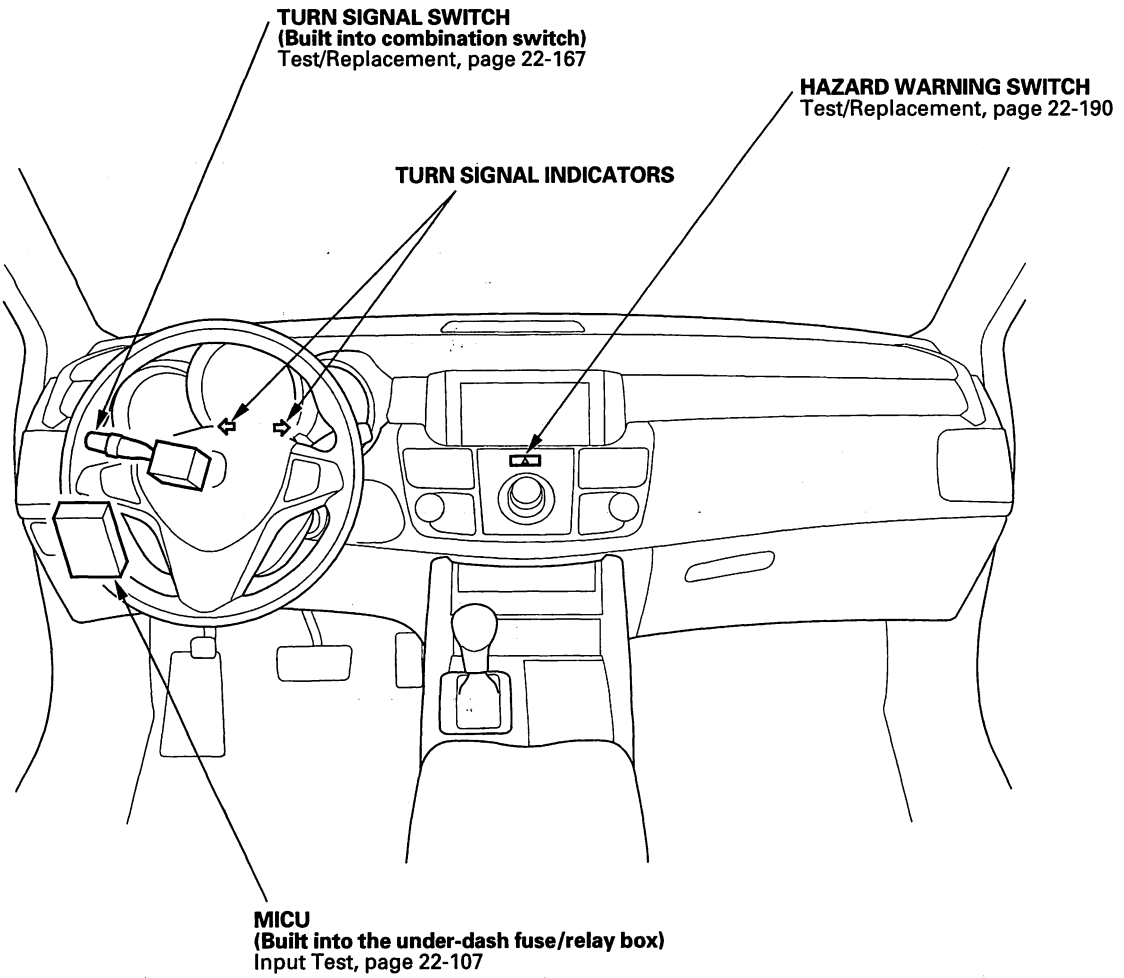

Protected by AR

# Turn Signal/Hazard Flasher

## Circuit Diagram

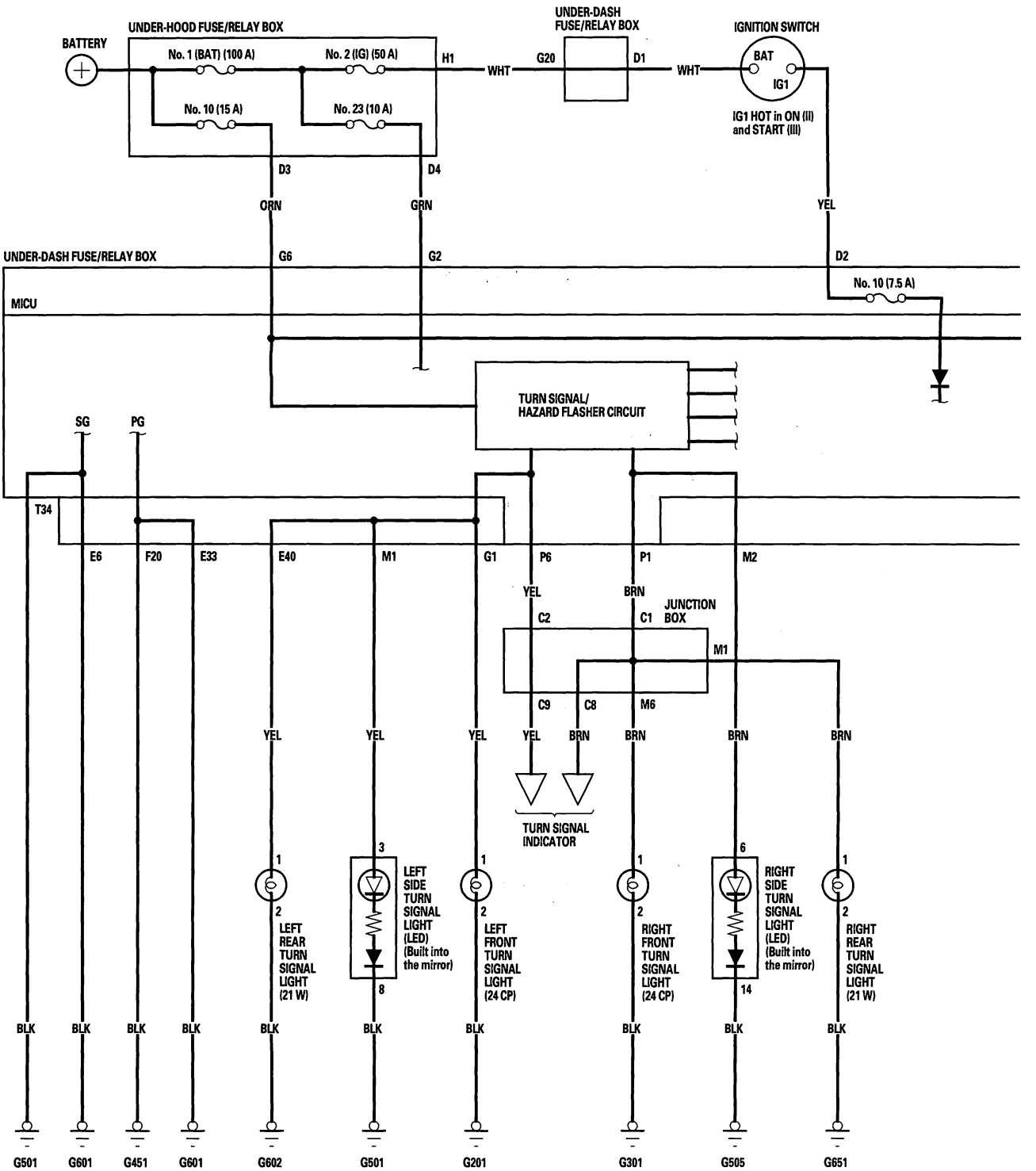




BACK

Protected by AR



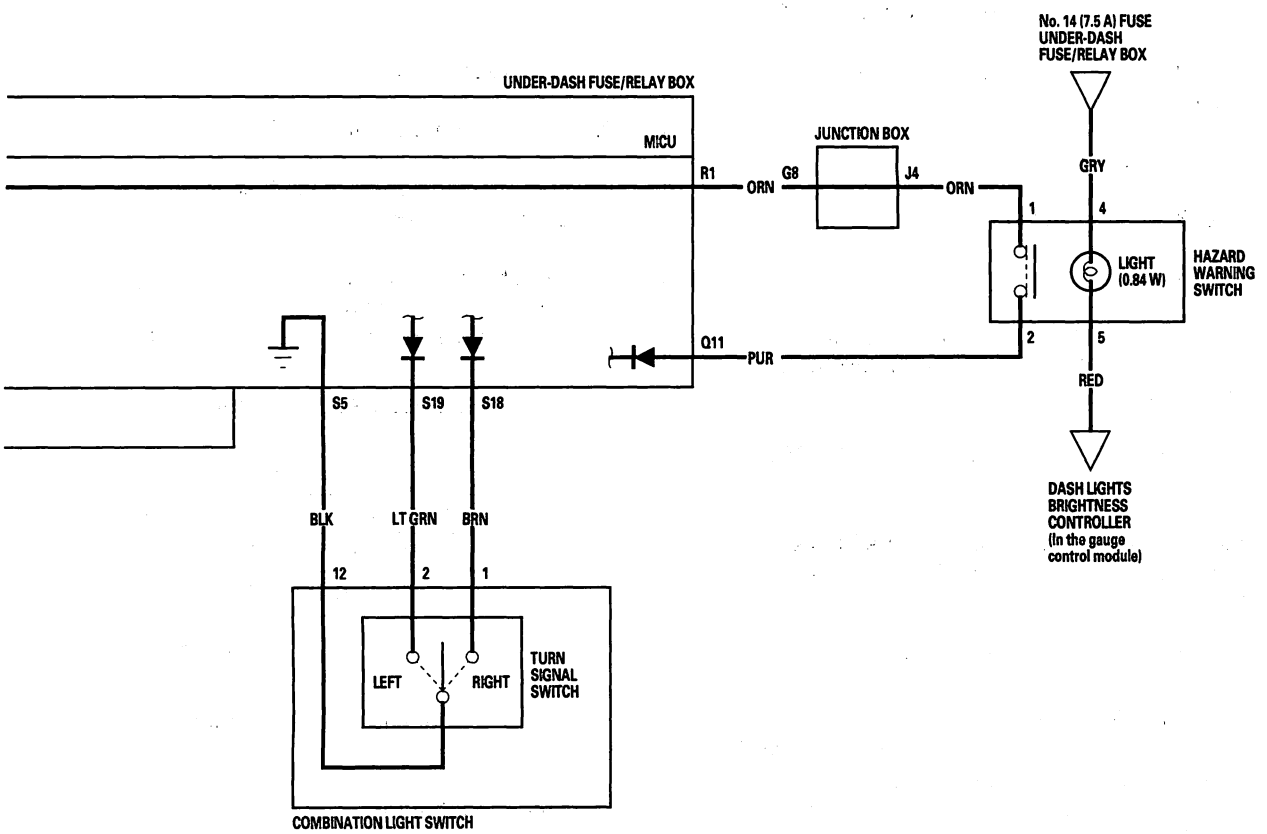

Protected by AR



## DTC Troubleshooting

### DTC B1280: Turn Signal Switch Circuit Malfunction

NOTE: If you are troubleshooting multiple DTCs, be sure to follow the instructions in B-CAN System Diagnosis Test Mode A (see page 22-88).

1. Clear the DTCs with the HDS.
2. Turn the ignition switch OFF, and then back ON (II).
3. Turn the turn signal switch to the left position and the right position.
4. Check the DTCs with the HDS.

   *Is DTC B1280 indicated?*

   **YES**—Go to step 5.

   **NO**—Intermittent failure. The turn signal/hazard flasher system is OK at this time. Check for loose or poor connections. ■

5. Select LIGHTING from the BODY ELECTRICAL menu, and enter the DATA LIST.
6. Check the ON/OFF information of the TURN SIGNAL SWITCH (LEFT) and TURN SIGNAL SWITCH (RIGHT).

   *Are the TURN SIGNAL SWITCH (LEFT) information indicator ON, TURN SIGNAL SWITCH (RIGHT) information indicator OFF with the turn signal switch to the LEFT position, and are the TURN SIGNAL SWITCH (LEFT) information indicator OFF, TURN SIGNAL SWITCH (RIGHT) information indicator ON with the turn signal switch to the RIGHT position?*

   **YES**—Faulty MICU; replace the under-dash fuse/relay box. ■

   **NO**—Go to step 7.

7. Disconnect the 12P connector from the combination light switch.
8. Check the ON/OFF information of the TURN SIGNAL SWITCH (LEFT) and TURN SIGNAL SWITCH (RIGHT) in the DATA LIST.

   *All the information indicators OFF?*

   **YES**—Go to step 12.

   **NO**—Go to step 9.

9. Turn the ignition switch OFF.
10. Disconnect the under-dash fuse/relay box connector S (20P).
11. Check for continuity between the body ground and under-dash fuse/relay box connector S (20P) terminals No. 18 and No. 19 individually.

**UNDER-DASH FUSE/RELAY BOX CONNECTOR S (20P)**

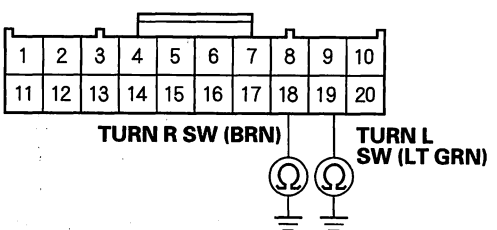


Wire side of female terminals

*Is there continuity?*

**YES**—Check for continuity between terminal No. 5 and terminals No. 18, and 19 individually. If there is still continuity, repair short to ground, or to another wire.

**NO**—Faulty MICU; replace the under-dash fuse/relay box. ■



BACK

Protected by AR



12. Turn the ignition switch OFF.

13. Check the combination light switch (see page 22-167).

    *Is the combination light switch OK?*

    **YES**—Go to step 14.

    **NO**—Faulty combination light switch; replace it. ■

14. Disconnect the under-dash fuse/relay box connectors S (20P).

15. Check for continuity between the under-dash fuse/relay box connector S (20P) No. 5, No. 18, and No. 19 terminals and the combination light switch 12P connector No. 12, No. 1, and No. 2 terminals.

**UNDER-DASH FUSE/RELAY BOX CONNECTOR S (20P)**
Wire side of female terminals

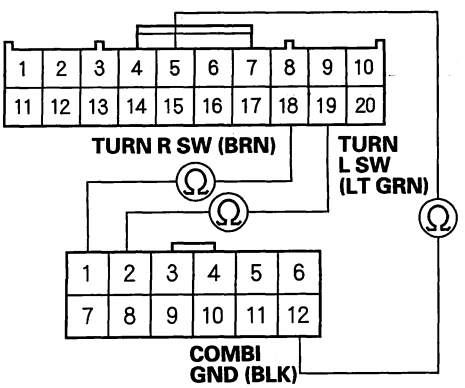


**COMBINATION LIGHT SWITCH 12P CONNECTOR**
Wire side of female terminals

*Is there continuity?*

**YES**—Faulty MICU; replace the under-dash fuse/relay box. ■

**NO**—Repair an open in the wire. ■

Protected by AR

# Turn Signal/Hazard Flasher

## MICU Input Test

1. Before troubleshooting the turn signal/hazard flasher system, troubleshoot the B-CAN System Diagnosis Test Mode A (see page 22-88).
2. Check the No. 10 (7.5 A) fuse in the under-dash fuse/relay box. If the fuse is blown, replace it and go to step 3.
3. Disconnect the under-dash fuse/relay box connectors D, E, F, G, M, P, Q, R, S, and T.

   NOTE: All connector views are shown from wire side of female terminals.

**UNDER-DASH FUSE/RELAY BOX CONNECTOR D (2P)**

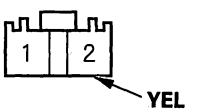


**UNDER-DASH FUSE/RELAY BOX CONNECTOR E (42P)**

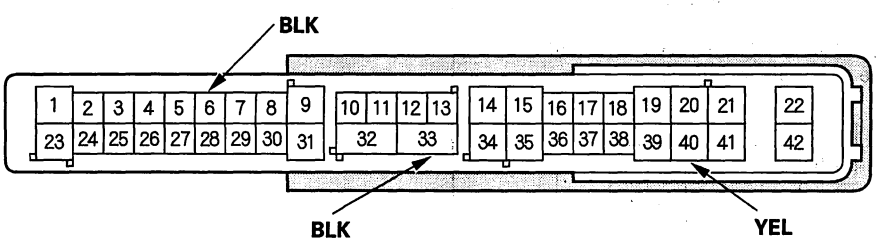


**UNDER-DASH FUSE/RELAY BOX CONNECTOR F (34P)**

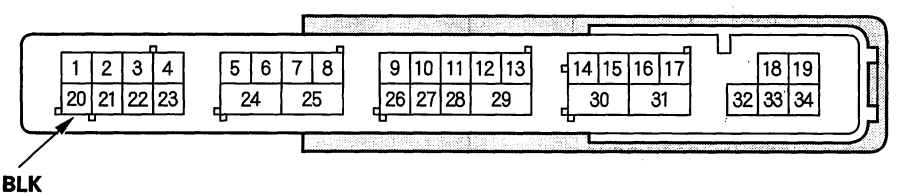


**UNDER-DASH FUSE/RELAY BOX CONNECTOR G (21P)**

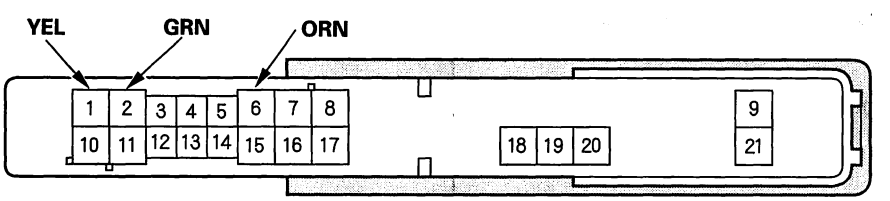




BACK

Protected by AR



UNDER-DASH FUSE/RELAY BOX
CONNECTOR M (10P)

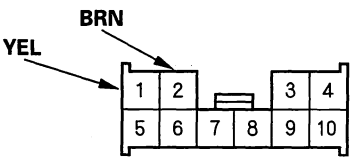


UNDER-DASH FUSE/RELAY BOX
CONNECTOR P (10P)

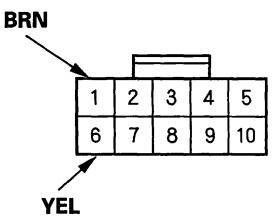


UNDER-DASH FUSE/RELAY BOX
CONNECTOR Q (16P)

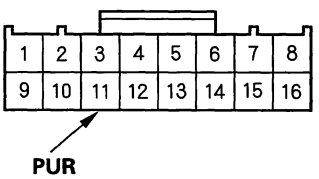


UNDER-DASH FUSE/RELAY BOX
CONNECTOR R (20P)

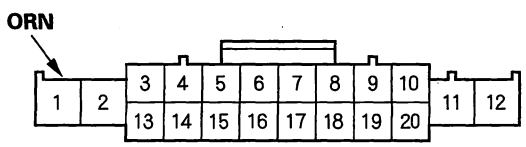


UNDER-DASH FUSE/RELAY BOX
CONNECTOR S (20P)

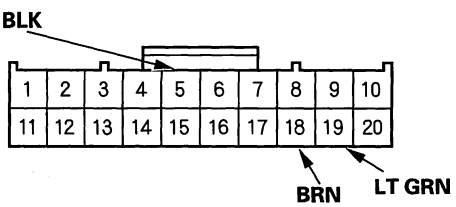


UMDER-DASH FUSE/RELAY BOX
CONNECTOR T (34P)

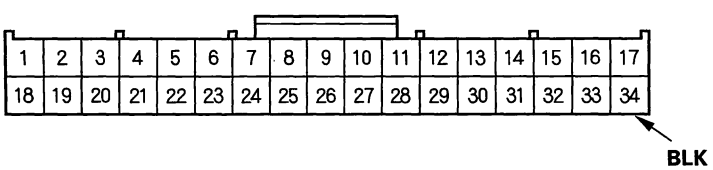


4. Inspect the connector and socket terminals to be sure they are all making good contact.

   - If the terminals are bent, loose or corroded, repair them as necessary and recheck the system.
   - If the terminals look OK, go to step 5.

(cont'd)

Protected by AR



## MICU Input Test (cont'd)

5. With the connectors still disconnected, make these input tests at the appropriate connector.

- If any test indicates a problem, find and correct the cause, then recheck the system.
- If all the input tests prove OK, go to step 6.

| Cavity | Wire | Test condition | Test: Desired result | Possible cause if result is not obtained |
|---|---|---|---|---|
| E40 | YEL | Under all conditions | Connect G2 and E40 terminals with a jumper wire:<br>The left rear turn signal light should come on. | • Poor ground (G602)<br>• Blown bulb<br>• An open in the wire |
| G1 | YEL | Under all conditions | Connect G2 and G1 terminals with a jumper wire:<br>The left front turn signal light should come on. | • Poor ground (G201)<br>• Blown bulb<br>• An open in the wire |
| M1 | YEL | Under all conditions | Connect G2 and M1 terminals with a jumper wire:<br>The left side turn signal light (in mirror) should come on. | • Poor ground (G501)<br>• Faulty left side turn signal light<br>• An open in the wire |
| M2 | BRN | Under all conditions | Connect G2 and M2 terminals with a jumper wire:<br>The right side turn signal light (in mirror) should come on. | • Poor ground (G505)<br>• Faulty right side turn signal light<br>• An open in the wire |
| P1 | BRN | Under all conditions | Connect G2 and P1 terminals with a jumper wire:<br>The right front turn signal light, right rear turn signal light and right turn signal indicator should come on. | • Poor ground (G301, G651 or G501)<br>• Faulty junction box<br>• Blown bulb<br>• An open in the wire |
| P6 | YEL | Under all conditions | Connect G2 and P6 terminals with a jumper wire:<br>The left turn signal indicator should come on. | • Faulty gauge control module<br>• Faulty junction box<br>• An open in the wire<br>• Poor ground (G501) |
| Q11<br>·<br>R1 | PUR<br>·<br>ORN | Hazard warning switch pressed | Check for continuity Q11 and R1 terminal:<br>There should be continuity. | • Faulty junction box<br>• Faulty hazard warning switch<br>• An open in the wire |



BACK

Protected by AR



6. Reconnect the connectors to the under-dash fuse/relay box, and make these input tests at the connectors.

- If any test indicates a problem, find and correct the cause, then recheck the system.
- If all the input tests prove OK, the MICU must be faulty; replace the under-dash fuse/relay box.

| Cavity | Wire | Test condition | Test: Desired result | Possible cause if result is not obtained |
|---|---|---|---|---|
| G2 | GRN | Under all conditions | Check for voltage between G2 terminal and body ground: There should be battery voltage. | • Blown No. 23 (10 A) fuse in the under-hood fuse/relay box<br>• An open in the wire |
| G6 | ORN | Under all conditions | Check for voltage between G6 terminal and body ground: There should be battery voltage. | • Blown No. 10 (15 A) fuse in the under-hood fuse/relay box<br>• An open in the wire |
| D2 | YEL | Ignition switch ON (II) | Check for voltage between D2 terminal and body ground: There should be battery voltage. | An open in the wire |
| E6 | BLK | Under all conditions | Check for voltage to ground: There should be less than 0.5 V. | • Poor ground (G601)<br>• An open in the wire |
| E33 | BLK | Under all conditions | Check for voltage to ground: There should be less than 0.5 V. | • Poor ground (G601)<br>• An open in the wire |
| F20 | BLK | Under all conditions | Check for voltage to ground: There should be less than 0.5 V. | • Poor ground (G451)<br>• An open in the wire |
| T34 | BLK | Under all conditions | Check for voltage to ground: There should be less than 0.5 V. | • Poor ground (G501)<br>• An open in the wire |
| S18 · S5 | BRN · BLK | Turn signal switch in right position | Check for voltage between S18 and S5 terminals: There should be less than 1 V. | • Faulty combination light switch<br>• An open in the wire |
| | | Turn signal switch in left or neutral position | Check for voltage between S18 and S5 terminals: There should be 5 V or more. | • Faulty combination light switch<br>• Short to ground |
| S19 · S5 | LT GRN · BLK | Turn signal switch in left position | Check for voltage between S19 and S5 terminals: There should be less than 1 V. | • Faulty combination light switch<br>• An open in the wire |
| | | Turn signal switch in right or neutral position | Check for voltage between S19 and S5 terminals: There should be 5 V or more. | • Faulty combination light switch<br>• Short to ground |

Protected by AR

# Turn Signal/Hazard Flasher

## Hazard Warning Switch Test/Replacement

1. Remove the center panel (see page 20-100).
2. Remove the screws and the hazard warning switch (A).

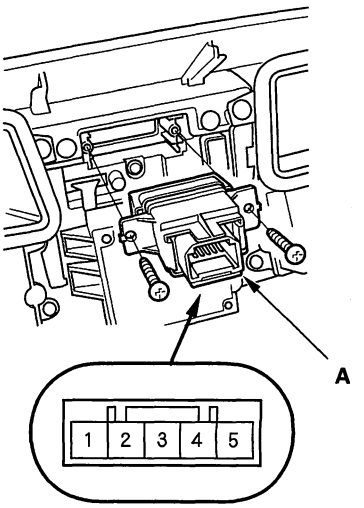


3. Check for continuity between the terminals in each switch position according to the table.

| Position \ Terminal | 1 | 2 | 4 | | 5 |
|---|---|---|---|---|---|
| OFF | | | ○ | ⊖ | ○ |
| ON | ○ | ○ | ○ | ⊖ | ○ |

NOTE: Both illumination bulbs are connected in parallel. If there is continuity, remove one illumination bulb at a time and recheck.

4. If the continuity is not as specified, replace the bulbs (A) or the hazard warning switch.

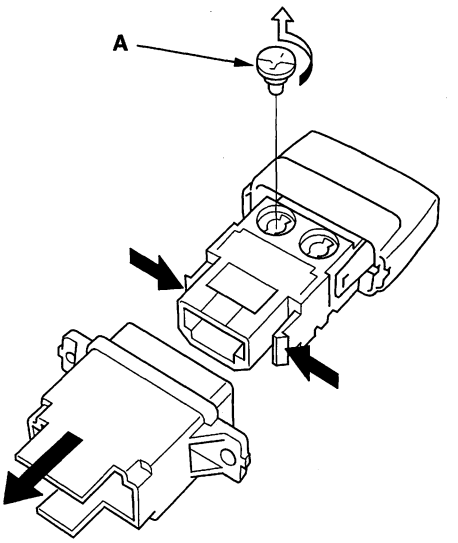




BACK

Protected by AR



## Side Turn Signal Light Replacement

1. Remove the mirror holder (see page 20-33).
2. Remove the four TORX screws using a TORX T10 bit, then remove the visor (A).

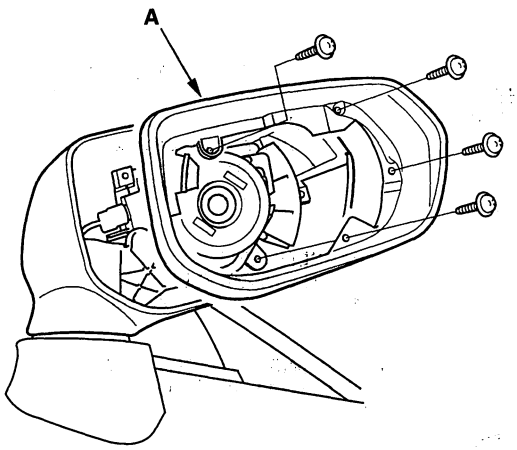


3. Remove the three TORX screws using a TORX T10 bit, then pull out the side turn signal light (A).

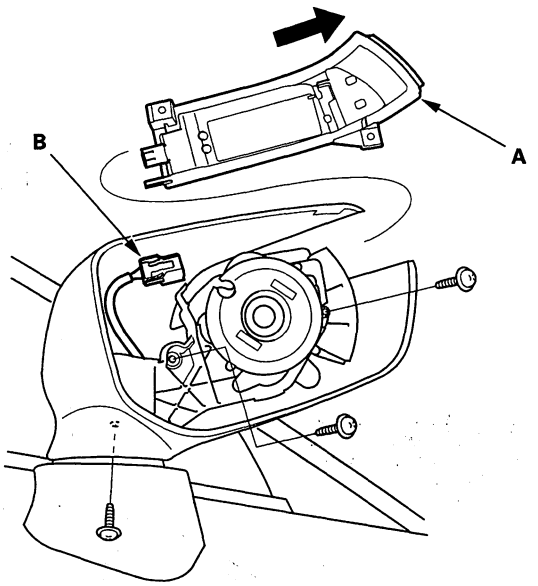


4. Disconnect the 2P connector (B) from the light.
5. Install in the reverse order of removal.

BACK

Protected by AR

# Interior Lights

## Component Location Index

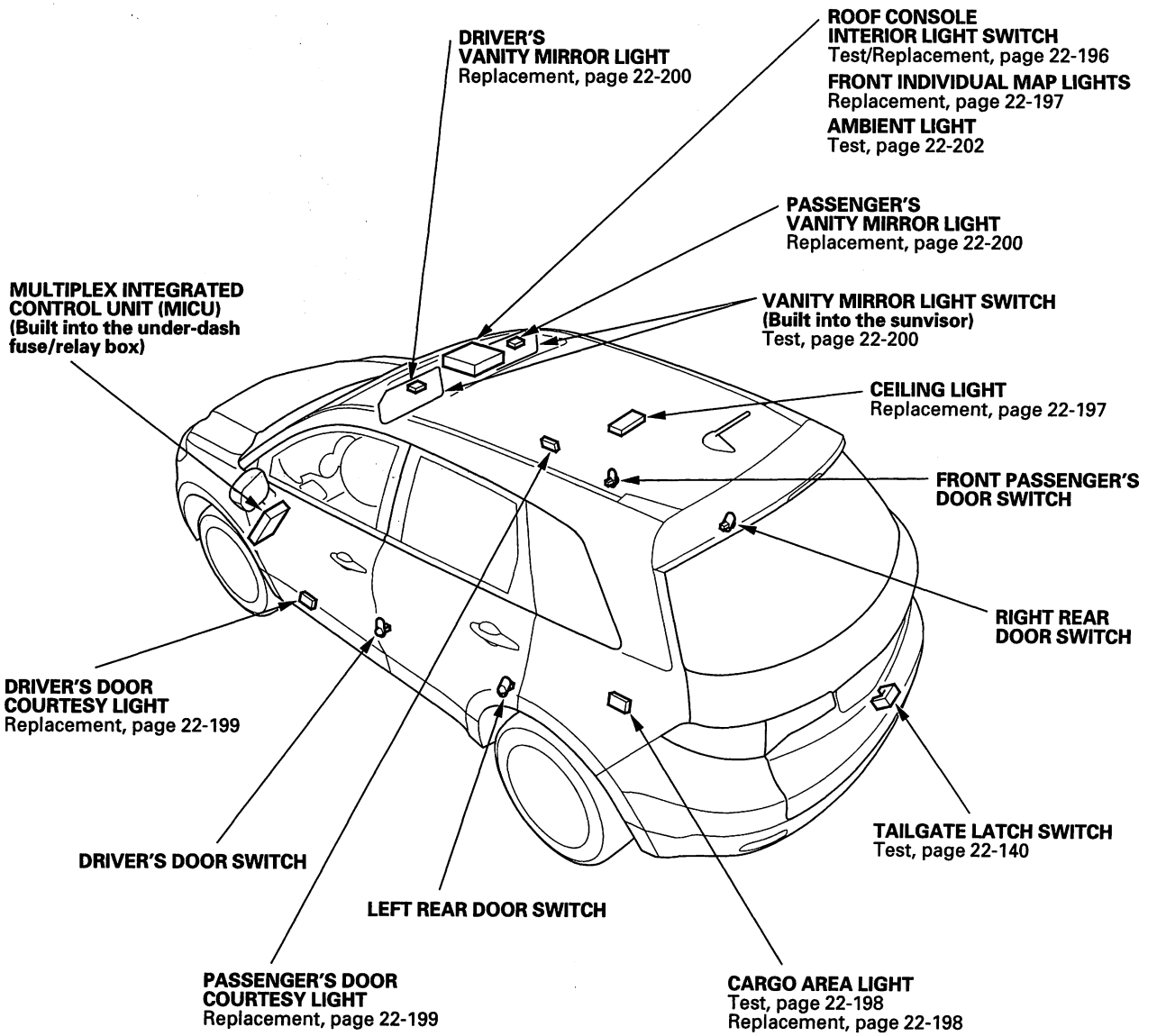




BACK

Protected by AR



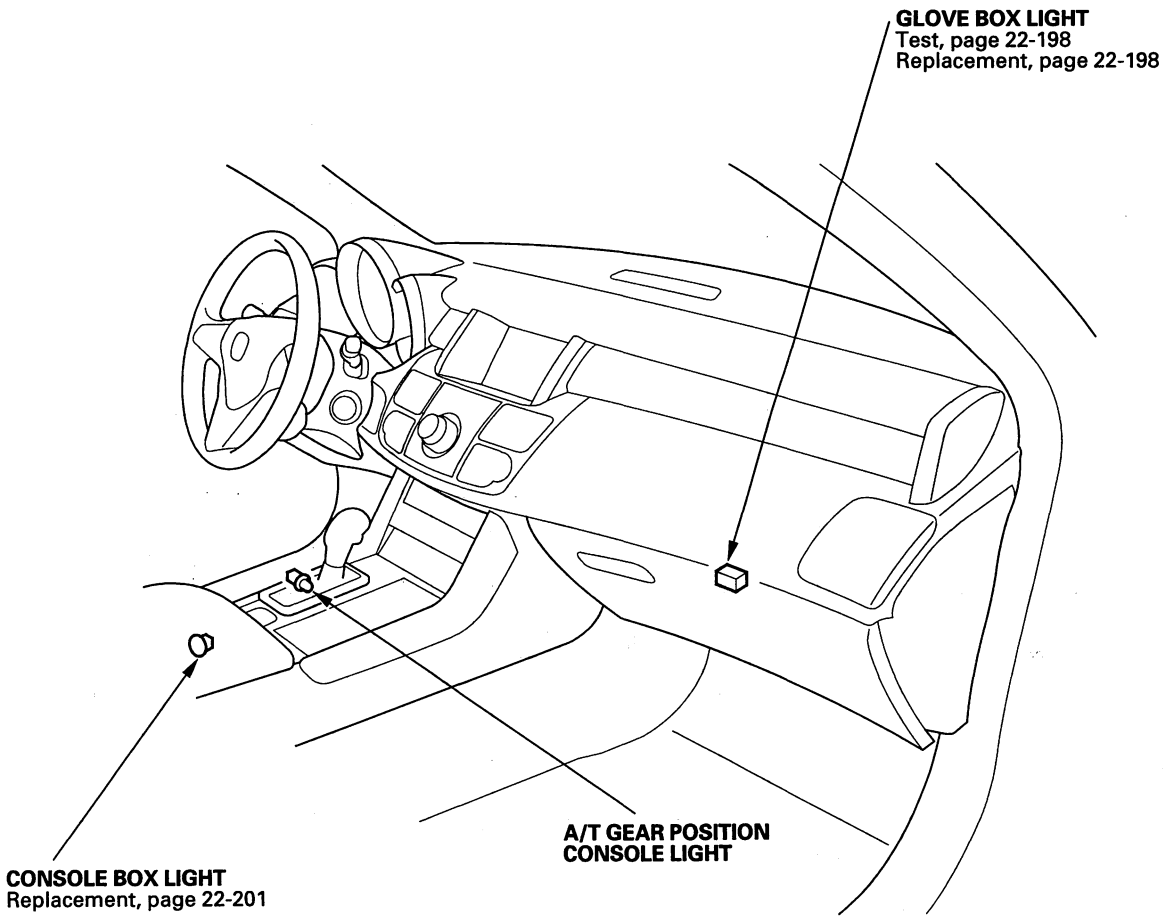

Protected by AR

# Interior Lights

## Circuit Diagram

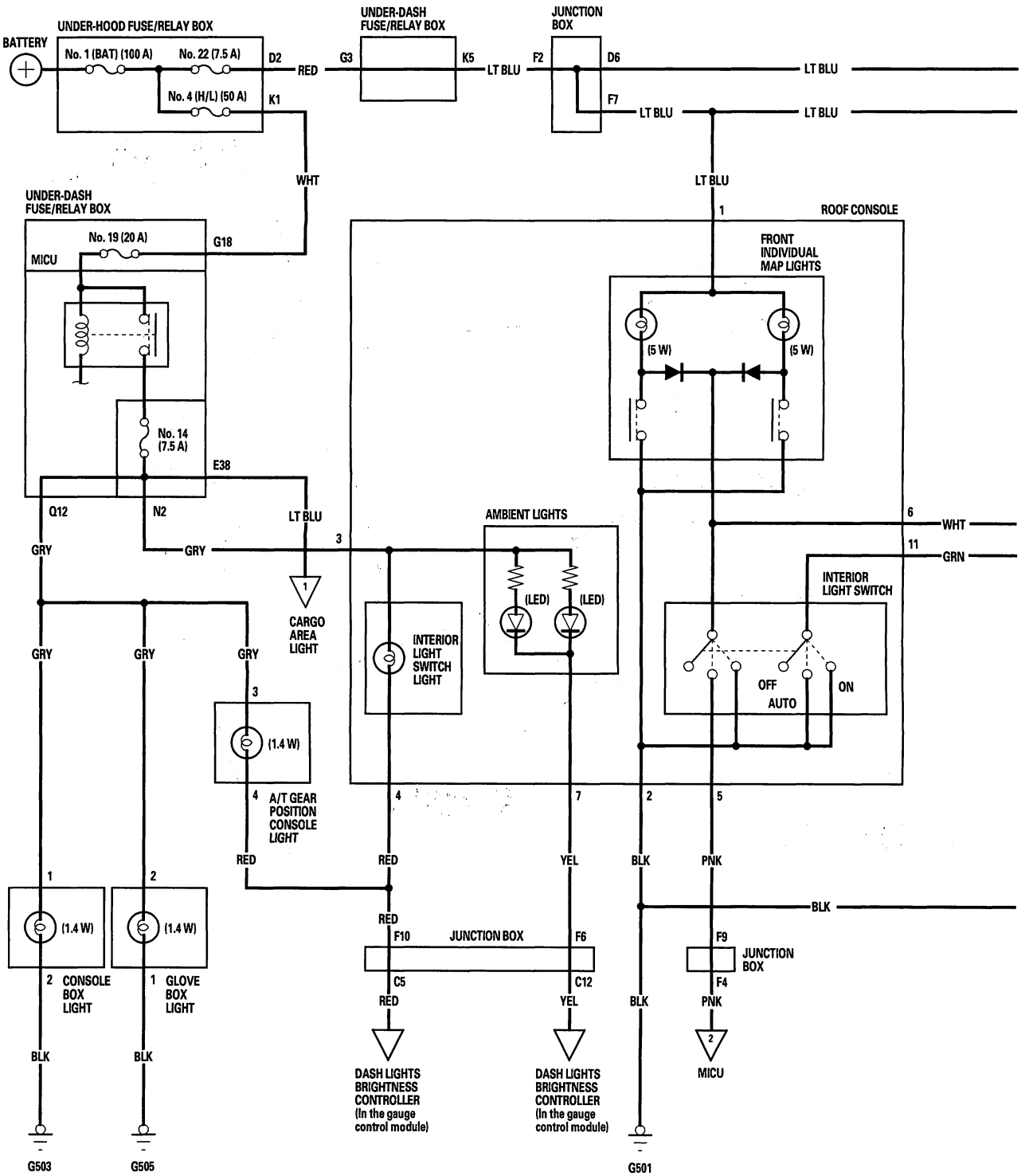




BACK

Protected by AR



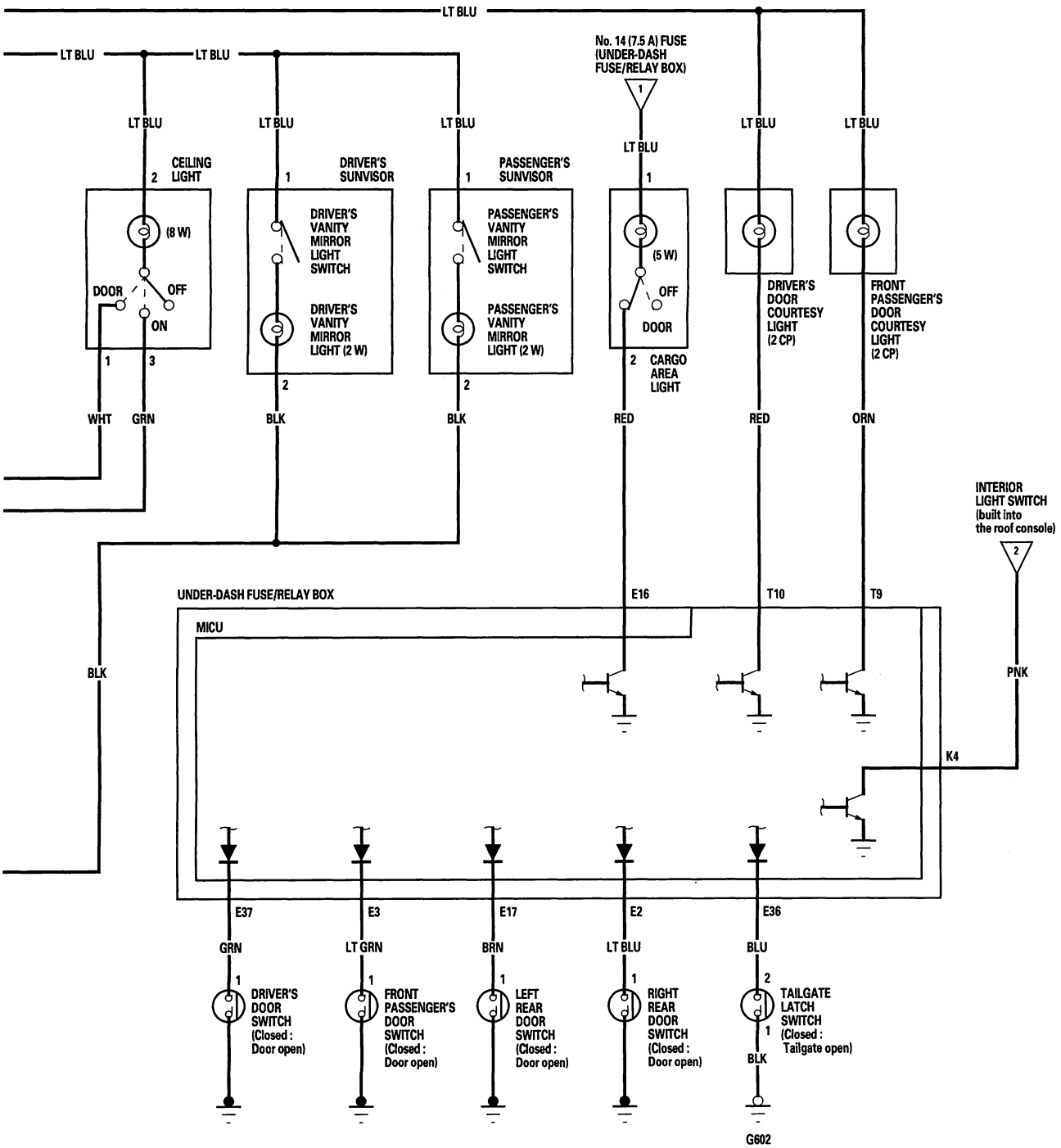


BACK

Protected by AR



## Interior Light Switch Test/Replacement

1. Carefully pry off the lens with a small screwdriver (see page 22-197).
2. Pull down the roof console (A) holding the center part of the roof console.

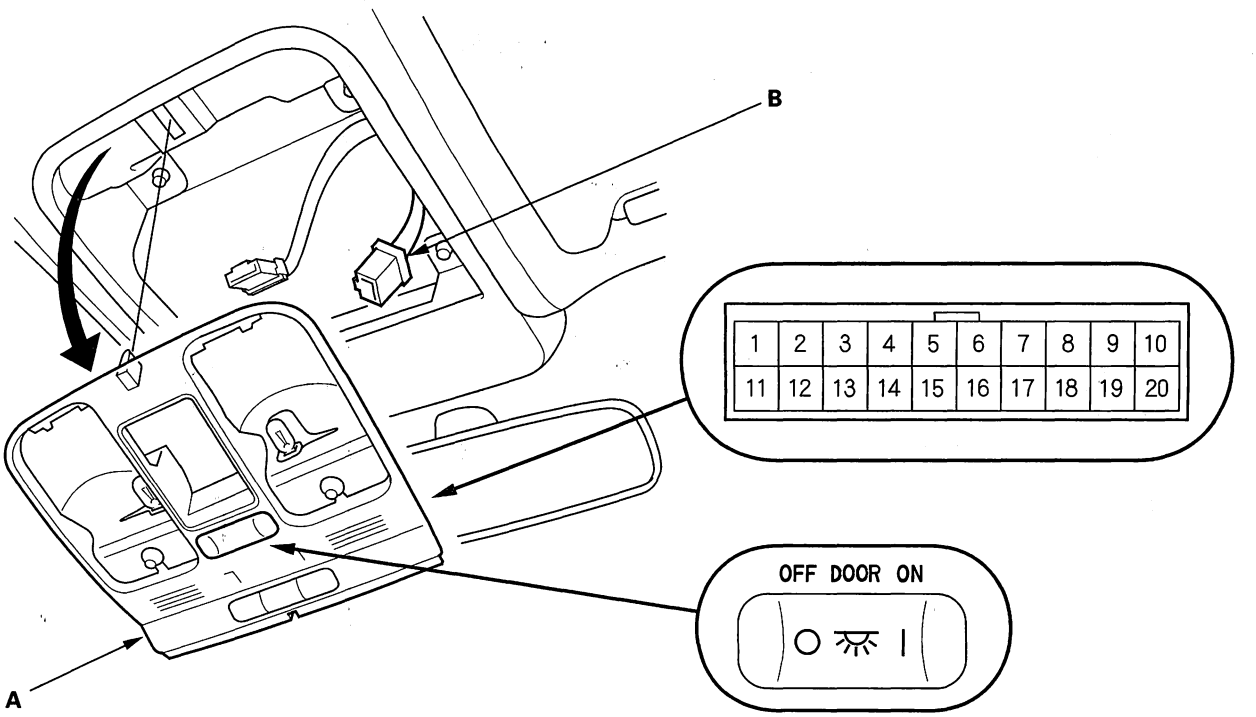


3. Remove the moonroof switch (see page 22-295).
4. Disconnect the 20P connector (B) from the roof console.
5. Check for continuity between the terminals in each interior light switch position according to the table.

NOTE:
- Before testing, check the front individual map light bulb(s).
- When check for continuity across the diode, use the diode setting (→|–) on the digital volt/ohm meter to check the diode bias.

| Position \ Terminal | | 1 | | 2 | 5 | 6 | 11 |
|---|---|---|---|---|---|---|---|
| OFF | ○ | ○ | ○ ▶\| | | | ○ | |
| OFF (Front map light switch ON) | ○ | ○ | ○ ▶\| | ○ | | ○ | |
| Middle (DOOR) position | | ○ | ○ ▶\| | | ○ | ○ | |
| ON | — | ○ | ○ ▶\| | ○ | | ○ | ○ |

6. If the continuity and the diode bias is not as specified, replace the roof console as an assembly.



BACK

Protected by AR



## Front Individual Map Light Replacement

1. Carefully pry off the lens (A) with a small screwdriver.

   **Front Map Light: 5 W x 2**

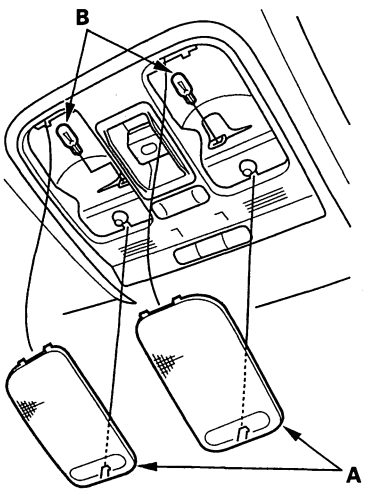


2. Check the bulb(s) (B). If the bulb is OK, but there is a malfunction, check the interior light switch (see page 22-196).

## Ceiling Light Test/Replacement

1. Turn the ceiling light switch OFF.
2. Carefully pry the lens (A) off with a small screwdriver.

   **Ceiling Light: 8 W**

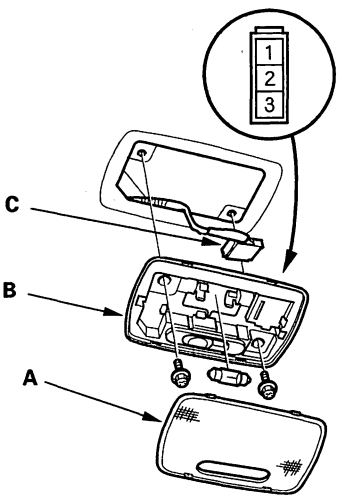


3. Remove the screws, then remove the ceiling light (B).
4. Disconnect the 3P connector (C) from the ceiling light.
5. Check for continuity between the terminals.
   - There should be continuity between the No. 1 and No. 2 terminals with the switch in the ON position.
   - There should be continuity between the No. 2 and No. 3 terminals with the switch in the DOOR position.
   - There should be no continuity between the No. 1 and No. 2 terminals, and between the No. 2 and No. 3 terminals with the switch in the OFF position.
6. If the continuity is not as specified, check the bulb. If the bulb is OK, replace the light.
7. Install in the reverse order of removal.

Protected by AR

# Interior Lights

## Cargo Area Light Test/Replacement

1. Open the tailgate.
2. Carefully pry out the cargo area light (A).

   **Cargo Area Light: 5 W**

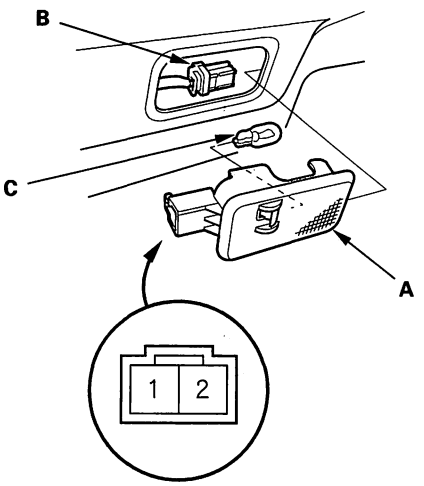


3. Disconnect the 2P connector (B) from the light.
4. Check for continuity between the No. 1 and No. 2 terminals. There should be continuity. If there is no continuity, check the bulb (C). If the bulb is OK, replace the cargo area light.

## Glove Box Light Test/Replacement

1. Remove the glove box stops and damper (see page 20-104).
2. Turn the bulb socket (A) 45° counterclockwise to remove it.

   **Glove Box Light: 1.4 W**

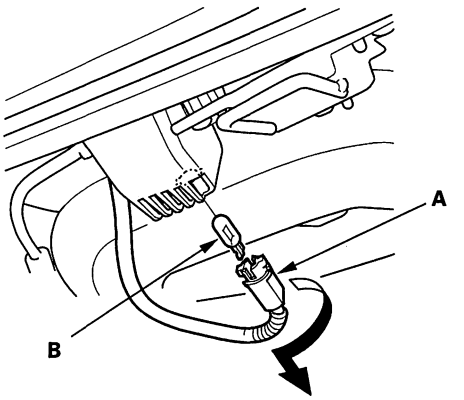


3. Remove the bulb (B) from the socket.
4. Install in the reverse order of removal.



BACK

Protected by AR



## Courtesy Light Replacement

1. Carefully pry off the lens (A) with a small screwdriver.

   **Courtesy Light: 2 CP**

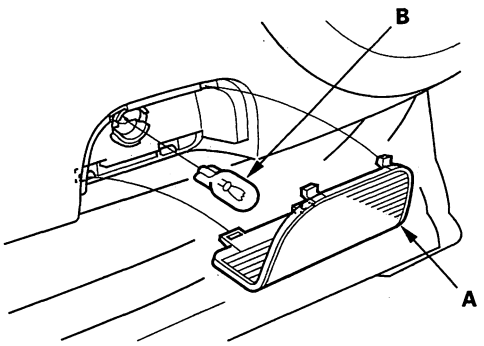


2. Remove the bulb (B) from the socket.
3. Install in the reverse order of removal.

Protected by AR



## Vanity Mirror Light Test/Replacement

1. Remove the sunvisor (see page 20-82).

2. Disconnect the 2P connector from the sunvisor (A).

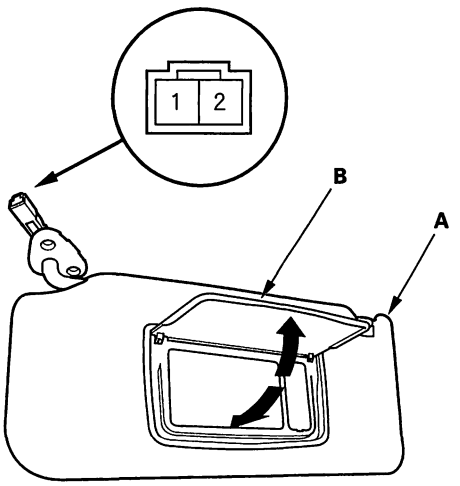


3. Check for continuity between the No. 1 and No. 2 terminals.

   - With the vanity mirror cover (B) opened, there should be continuity.
   - With the vanity mirror cover closed, there should be no continuity.

4. If the continuity check is not as specified, go to step 5.

5. Carefully pry off the lens (A) with a small screwdriver.

   **Vanity Mirror Light: 2 W**

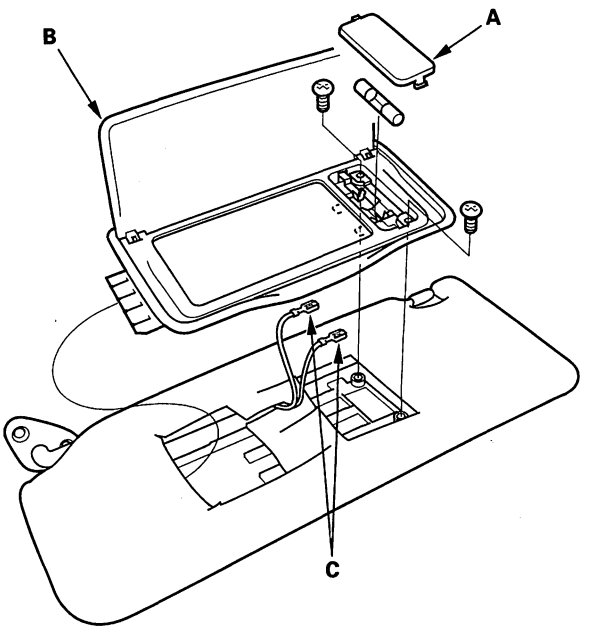


6. Remove the two screws, then remove the vanity mirror light (B).

7. Disconnect the two terminals (C) from the vanity mirror light.

8. Check for continuity between the terminals.

   - There should continuity between the terminals with the vanity mirror cover opened.
   - There should be no continuity between the terminals, with the vanity mirror cover closed.

9. If the continuity is not as specified, check the bulb or the light. If the bulb or light is OK, replace the sunvisor.

10. Install in the reverse order of removal.



BACK

Protected by AR



## Console Box Light Replacement

1. Open the center console lid.
2. Carefully pry out the console box light lens (A).

   **Console Box Light: 1.4 W**

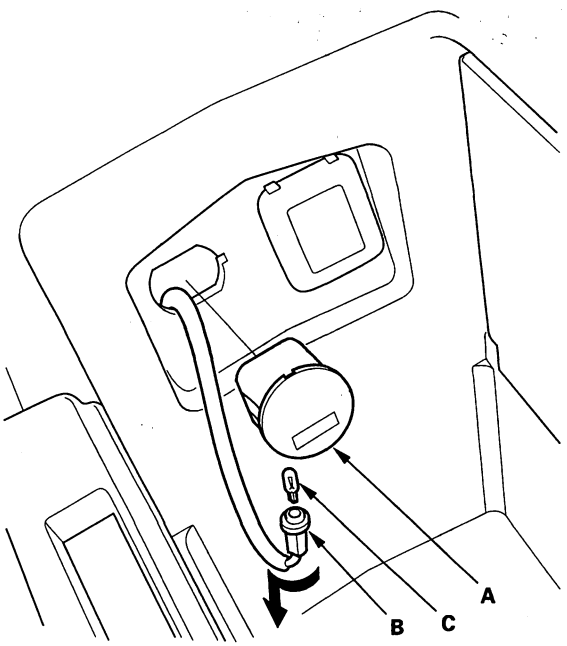


3. Turn the bulb socket (B) 45 ° counterclockwise to remove it from the lens.
4. Remove the bulb (C) from the socket.
5. Install in the reverse order of removal.

## Ambient Light Test

1. Remove the roof console and disconnect the 20P connector (see page 22-196).
2. Connect the roof console connector terminal No. 3 to battery power and terminal No. 7 to body ground. The ambient lights (A) should turn on. If they do not turn on, replace the roof console.

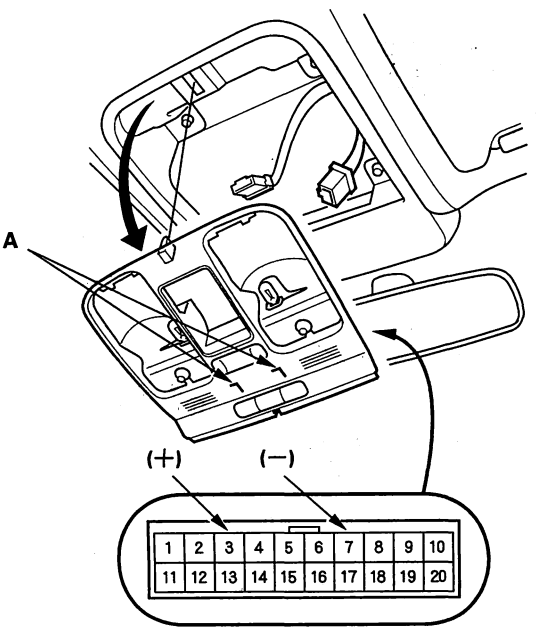

Protected by AR

# Entry Lights Control System

## Component Location Index

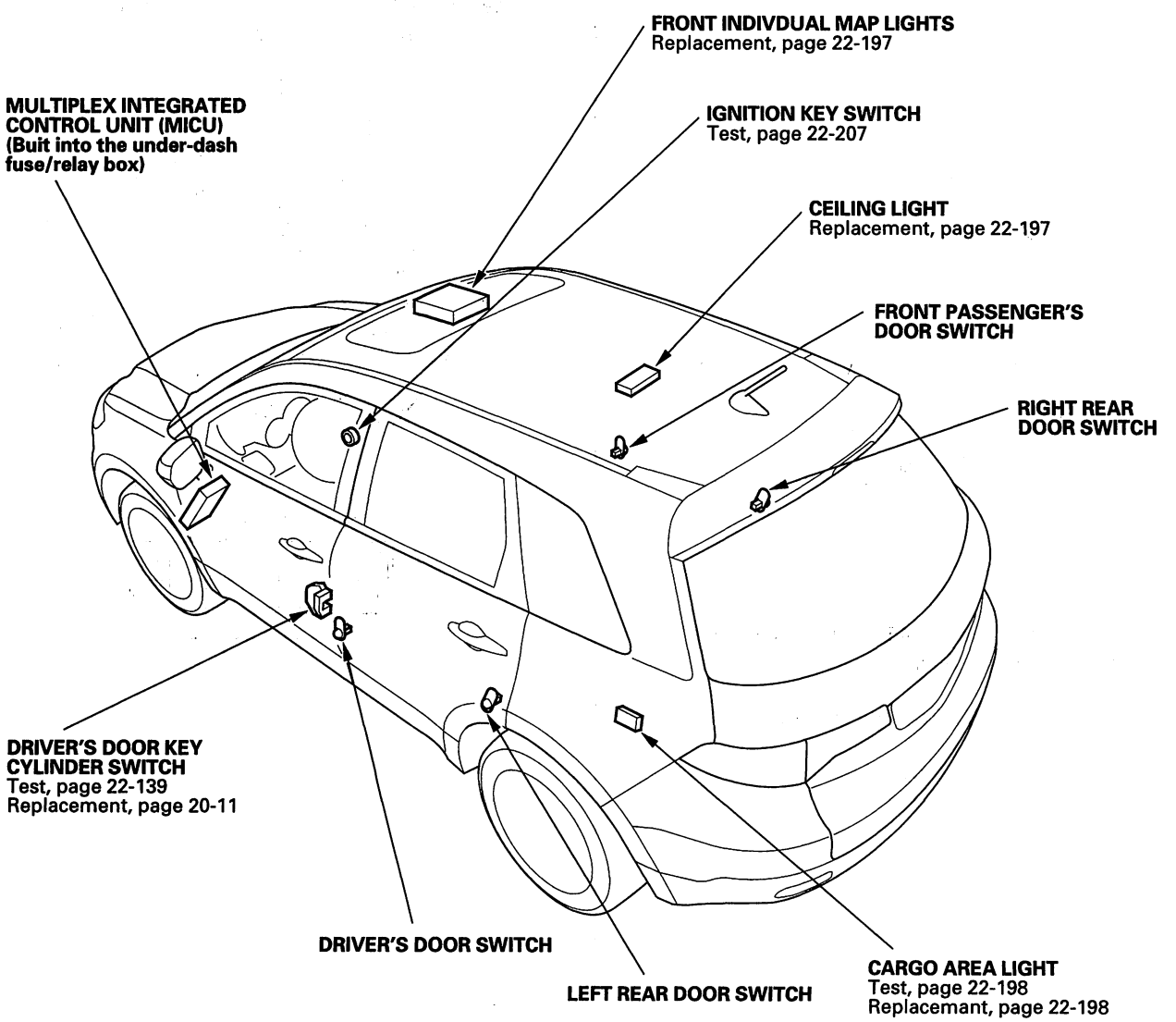




BACK

Protected by AR



## Circuit Diagram

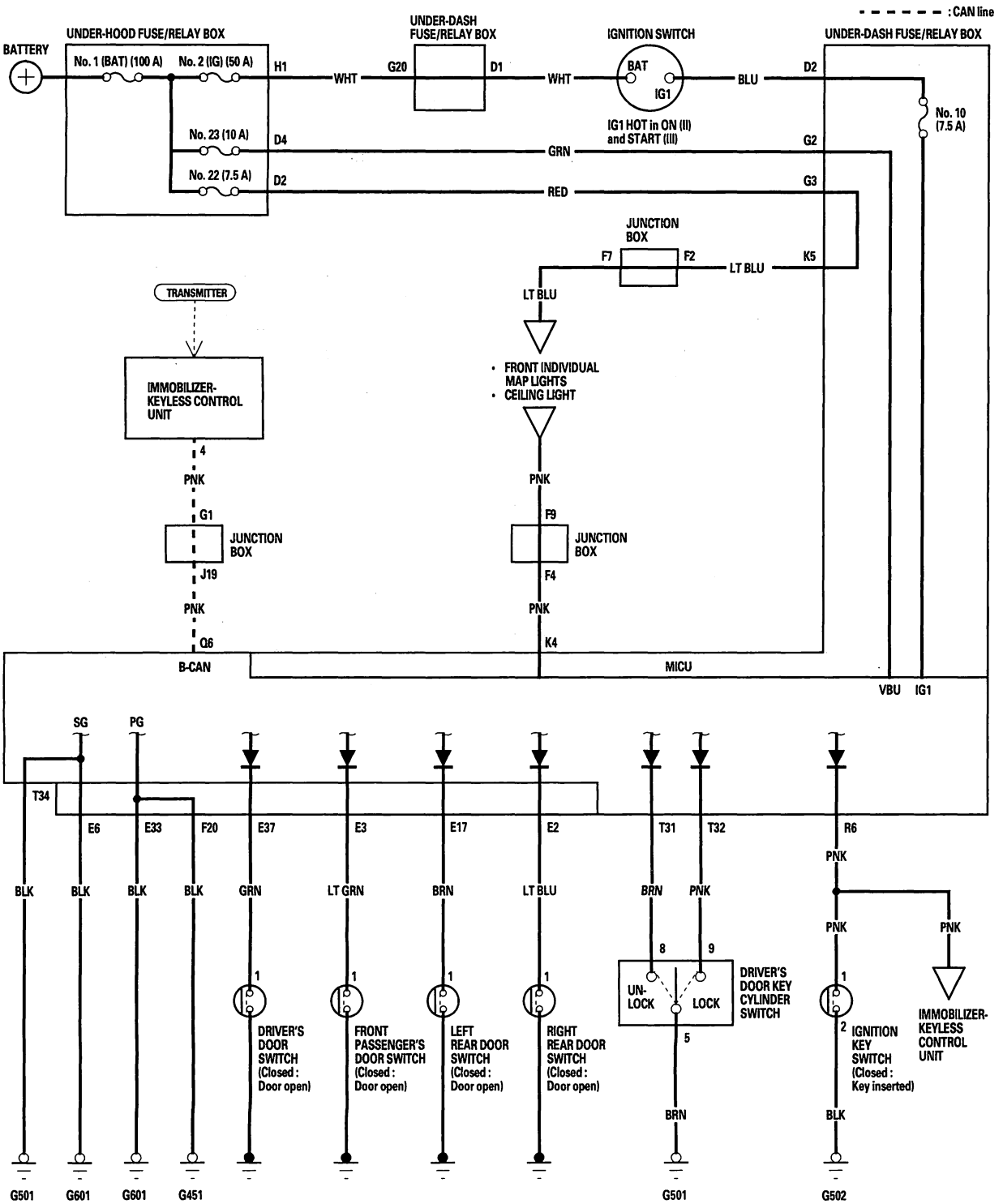

Protected by AR

# Entry Lights Control System

## MICU Input Test

1. Before troubleshooting the entry lights control system, troubleshoot the B-CAN System Diagnosis Test Mode A (see page 22-88).

2. Check the No. 10 (7.5 A) fuse in the under-dash fuse/relay box. If any fuse is blown, replace it and go to step 3.

3. Disconnect the under-dash fuse/relay box connectors E, F, G, K, Q, and T.

   NOTE: All connector views are shown from wire side of female terminals.

**UNDER-DASH FUSE/RELAY BOX CONNECTOR E (42P)**

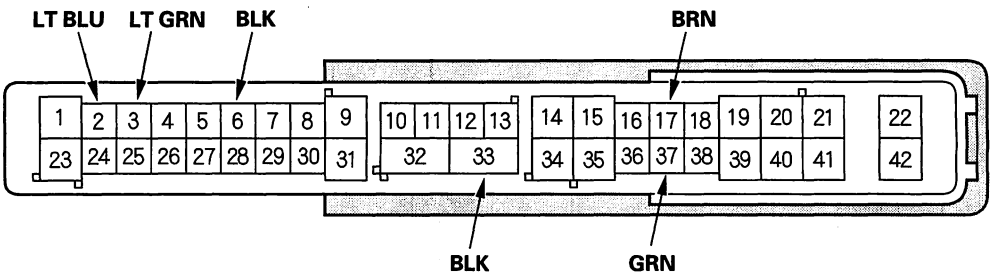


**UNDER-DASH FUSE/RELAY BOX CONNECTOR F (34P)**

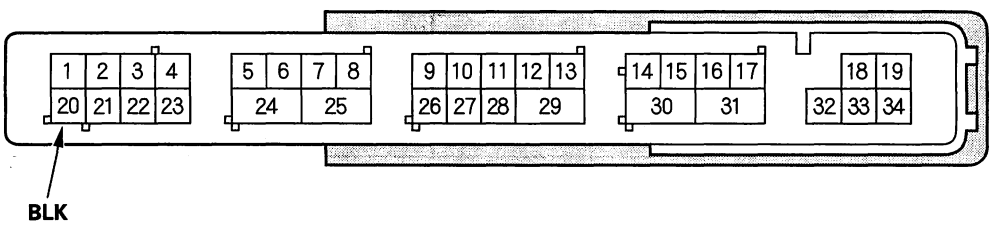




BACK

Protected by AR



UNDER-DASH FUSE/RELAY BOX
CONNECTOR K (8P)

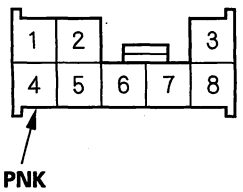


UNDER-DASH FUSE/RELAY BOX
CONNECTOR R (20P)

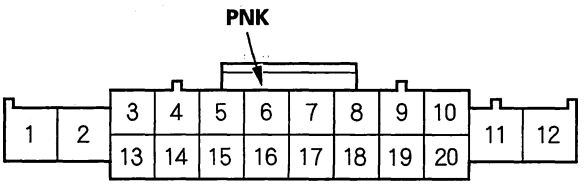


UNDER-DASH FUSE/RELAY BOX
CONNECTOR T (34P)

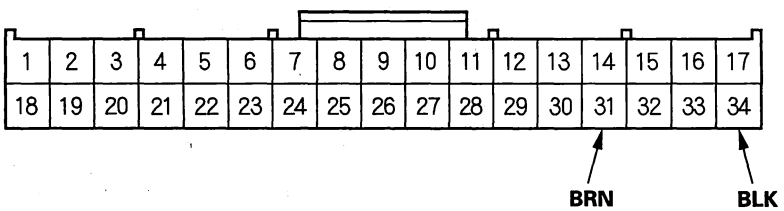


4. Inspect the connector and socket terminals to be sure they are all making good contact.

   - If the terminals are bent, loose or corroded, repair them as necessary and recheck the system.
   - If the terminals look OK, go to step 5.

5. With the connectors still disconnected, make these input tests at the appropriate connector.

   - If any test indicates a problem, find and correct the cause, then recheck the system.
   - If all the input tests prove OK, go to step 6.

| Cavity | Wire | Test condition | Test: Desired result | Possible cause if result is not obtained |
|---|---|---|---|---|
| K4 | PNK | Interior light switch in middle (DOOR) position | Attach to ground:<br>The ceiling light and front individual map lights should come on. | • Blown No. 22 (7.5 A) fuse in the under-hood fuse/relay box<br>• Blown bulb(s)<br>• Faulty ceiling light<br>• Faulty front individual map light<br>• Faulty interior light switch<br>• Faulty junction box<br>• An open in the wire |

(cont'd)

Protected by AR



## MICU Input Test (cont'd)

6. Reconnect the connectors to the under-dash fuse/relay box, and make these input tests at the connectors.

- If any test indicates a problem, find and correct the cause, then recheck the system.
- If all the input tests prove OK, the MICU must be faulty; replace the under-dash fuse/relay box.

| Cavity | Wire | Test condition | Test: Desired result | Possible cause if result is not obtained |
|---|---|---|---|---|
| E6 | BLK | Under all conditions | Check for voltage to ground: There should be less than 0.5 V. | • Poor ground (G601)<br>• An open in the wire |
| E33 | BLK | Under all conditions | Check for voltage to ground: There should be less than 0.5 V. | • Poor ground (G601)<br>• An open in the wire |
| F20 | BLK | Under all conditions | Check for voltage to ground: There should be less than 0.5 V. | • Poor ground (G451)<br>• An open in the wire |
| T34 | BLK | Under all conditions | Check for voltage to ground: There should be less than 0.5 V. | • Poor ground (G501)<br>• An open in the wire |
| E37 | GRN | Driver's door open | Check for voltage to ground: There should be less than 1 V. | • Faulty driver's door switch<br>• An open in the wire |
| | | Driver's door closed | Check for voltage to ground: There should be 5 V or more. | • Faulty driver's door switch<br>• Short to ground in the wire |
| E3 | LT GRN | Front passenger's door open | Check for voltage to ground: There should be less than 1 V. | • Faulty front passenger's door switch<br>• An open in the wire |
| | | Front passenger's door closed | Check for voltage to ground: There should be 5 V or more. | • Faulty front passenger's door switch<br>• Short to ground in the wire |
| E2 | LT BLU | Right rear door open | Check for voltage to ground: There should be less than 1 V. | • Faulty right rear door switch<br>• An open in the wire |
| | | Right rear door closed | Check for voltage to ground: There should be 5 V or more. | • Faulty right rear door switch<br>• Short to ground in the wire |
| E17 | BRN | Left rear door open | Check for voltage to ground: There should be less than 1 V. | • Faulty left rear door switch<br>• An open in the wire |
| | | Left rear door closed | Check for voltage to ground: There should be 5 V or more. | • Faulty left rear door switch<br>• Short to ground in the wire |
| R6 | PNK | Ignition key inserted into the ignition switch | Check for voltage to ground: There should be less than 1 V. | • Poor ground (G502)<br>• Faulty ignition key switch<br>• An open in the wire |
| | | Ignition key removed from the ignition switch | Check for voltage to ground: There should be 5 V or more. | • Faulty ignition key switch<br>• Short to ground in the wire |
| T31 | BRN | Driver door key cylinder switch unlocked | Check for voltage to ground: There should be less than 1 V. | • Poor ground (G501)<br>• Faulty driver door key cylinder switch<br>• An open in the wire |
| | | Driver door key cylinder switch in neutral | Check for voltage to ground: There should be 5 V or more. | • Faulty driver door key cylinder switch<br>• Short to ground in the wire |



BACK

Protected by AR



## Ignition Key Switch Test

1. Remove the steering column upper and lower covers (see page 20-107).

2. Disconnect the 6P connector.

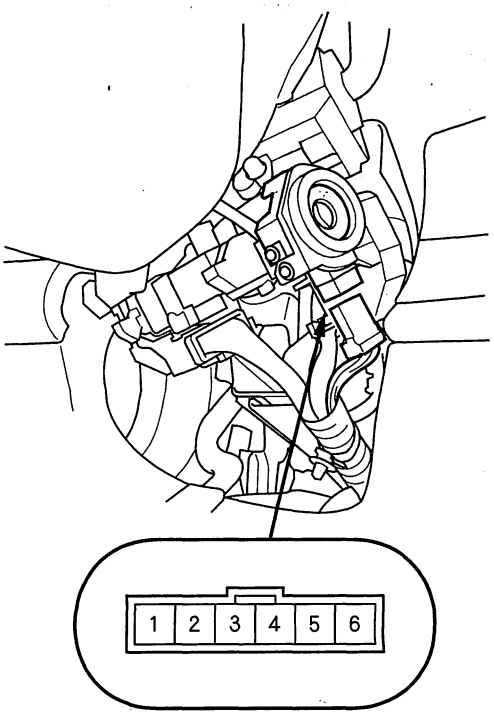


3. Check for continuity between the No. 1 and No. 2 terminals.

   - There should be continuity with the key in the ignition switch.
   - There should be no continuity with the key removed.

4. If the continuity is not as specified, replace the ignition switch.

Protected by AR



## Component Location Index

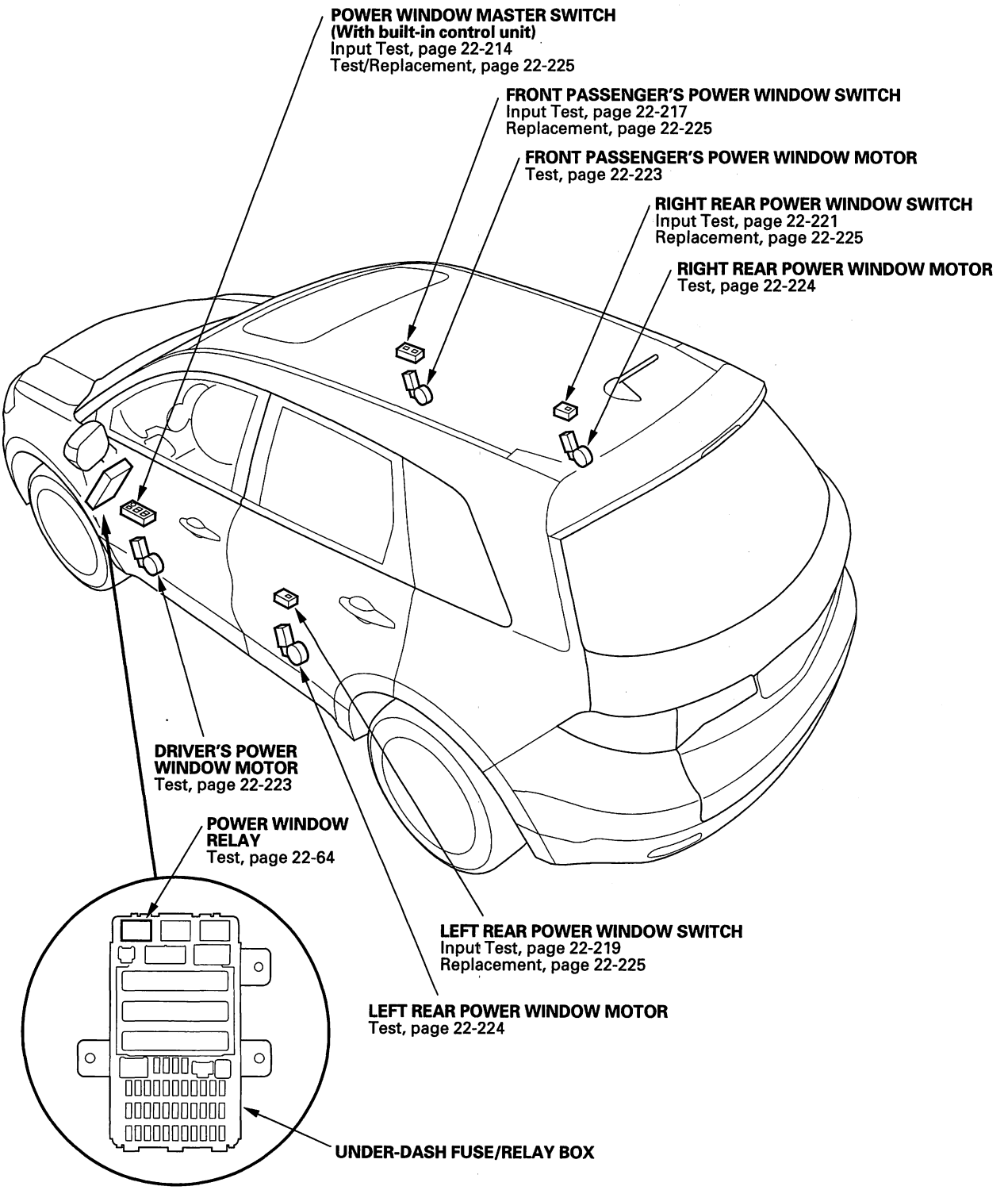




BACK

Protected by AR



# System Description

## Auto Reverse Operation

The system is composed of the power window master switch, the front passenger's power window switch, the driver's power window motor and the front passenger's power window motor.

The power window motor incorporates a pulser, which generates pulses during the motor's operation and sends the pulses to the power window control unit. As soon as the power window control unit detects no pulses from the pulser, the power window control unit makes the power window motor stop and reverse. If the window is more than halfway closed, it will reverse to the half open position. If the window is less than halfway closed, it will stop and reverse about 2 inches. This is to prevent pinching an obstacle during auto-up operation. The auto reverse operation is not active when the switch is held in the up position.

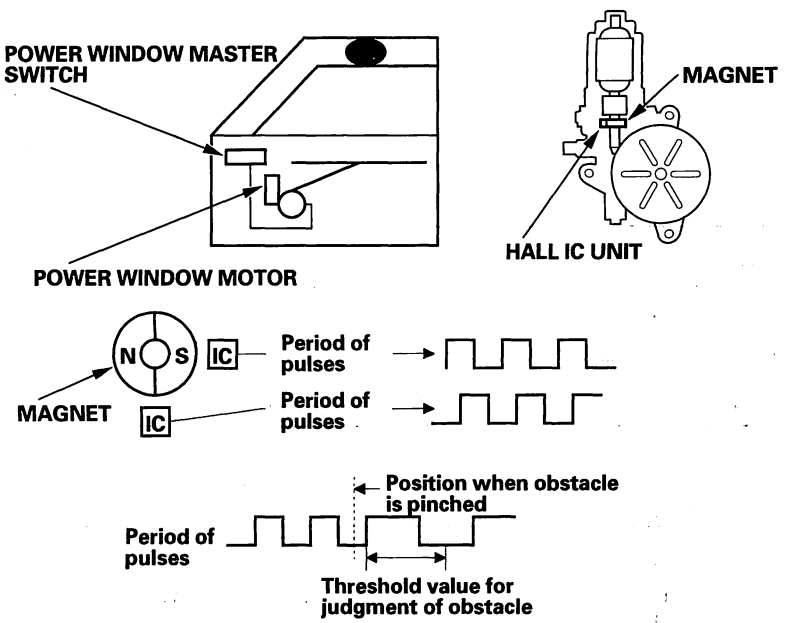

Protected by AR

# Power Windows

## Circuit Diagram

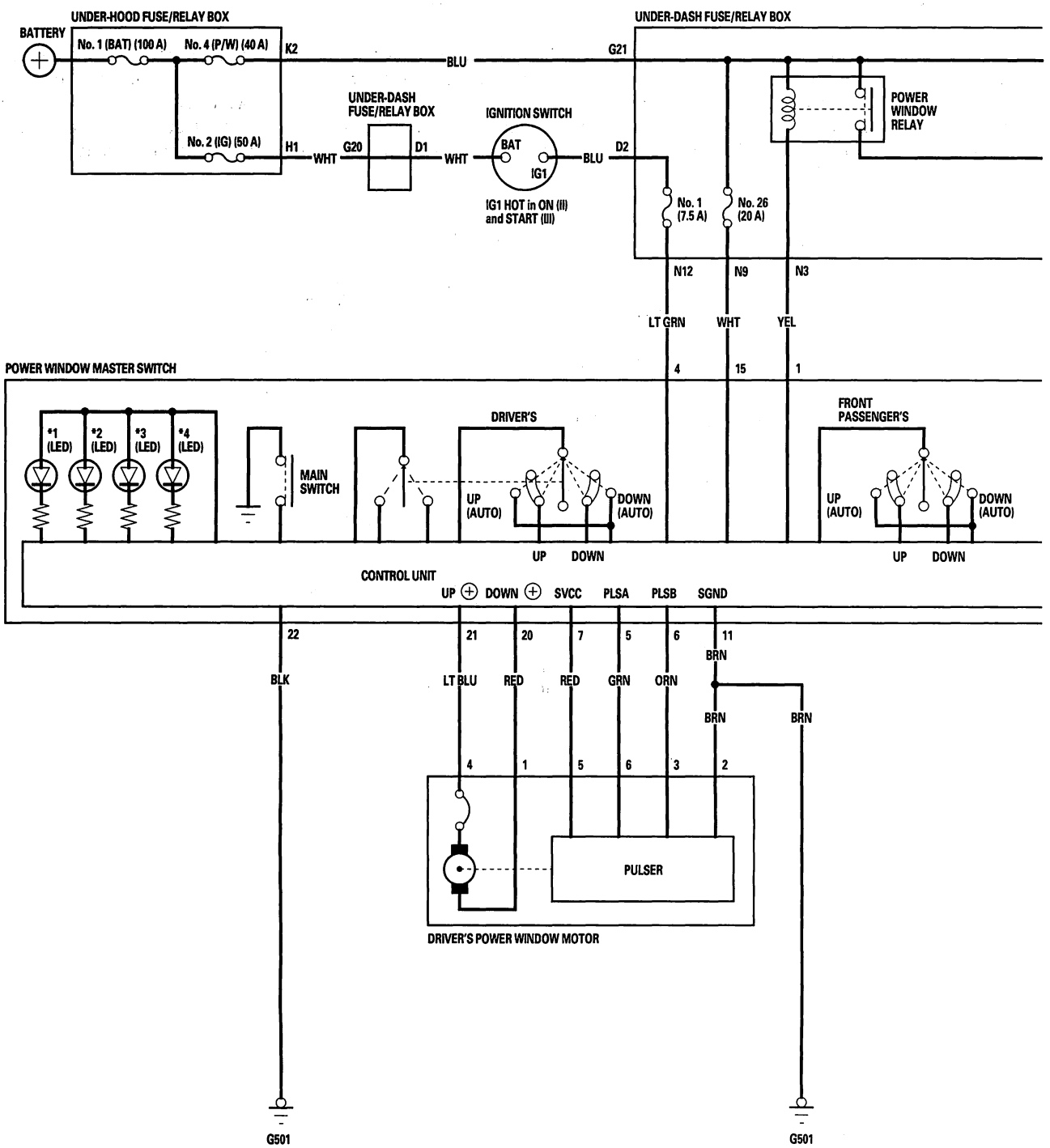




BACK

Protected by AR



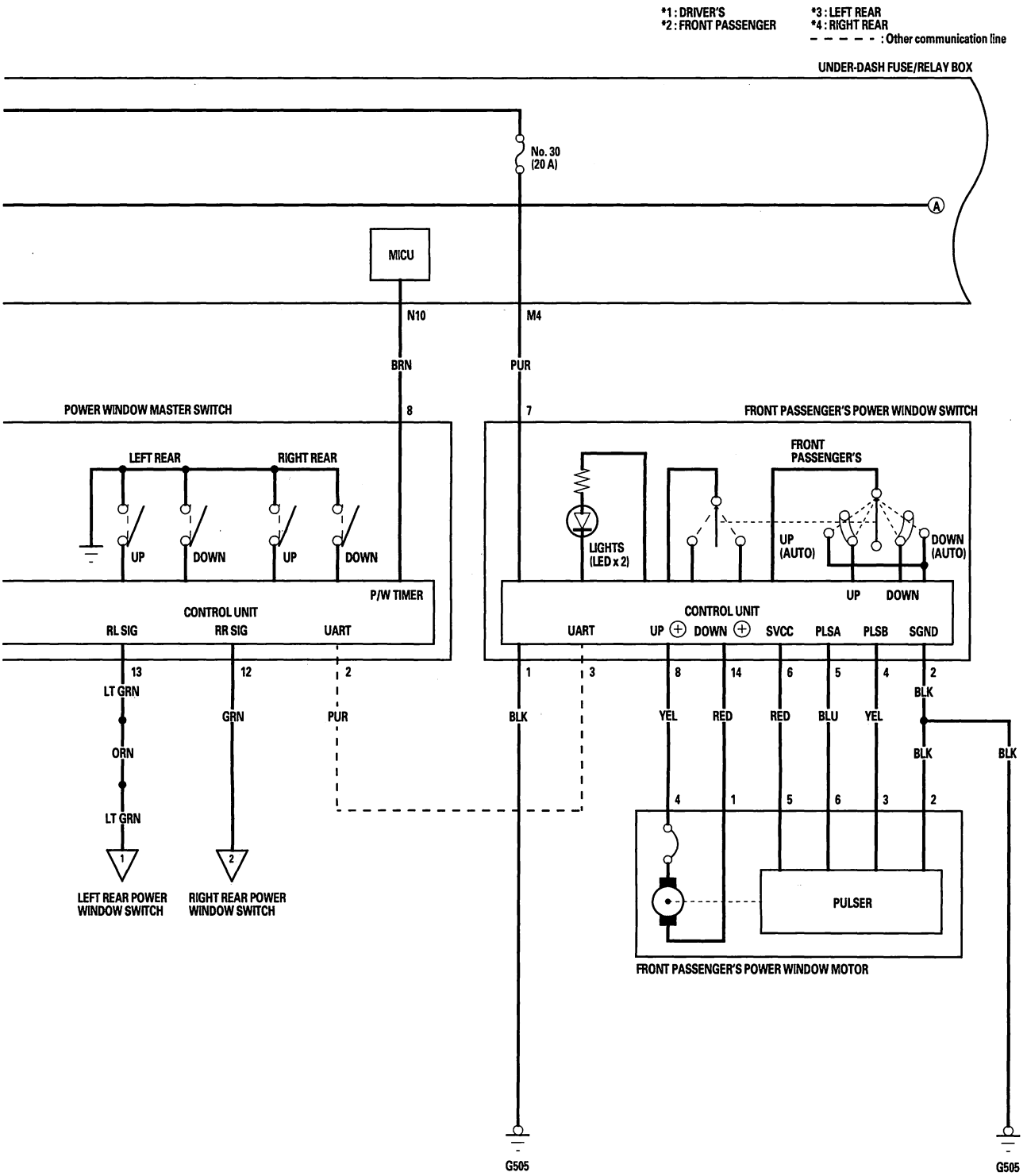


(cont'd)

Protected by AR

# Power Windows

## Circuit Diagram (cont'd)

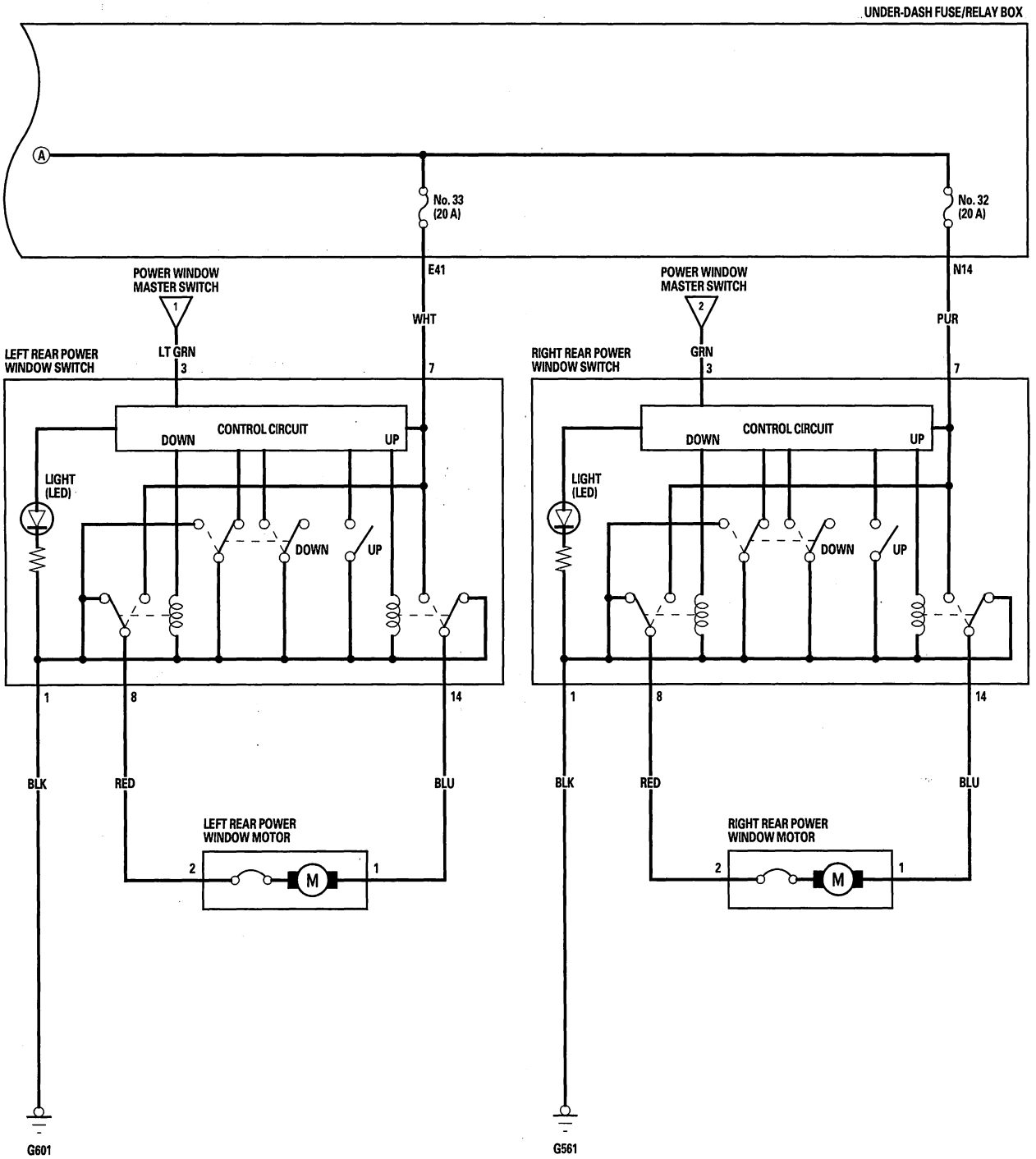




BACK

Protected by AR



# Resetting the Power Window Control Unit

NOTE: The clear procedure must be done prior to the learn procedure even if the auto function is working.

Resetting the driver's or passenger's power windows is required when any of the following have occurred:

- Power window control unit (built into the driver's master switch) is replaced
- Power window regulator replacement or repair
- Power window motor replacement or repair
- Window run channel replacement or repair
- Driver's or passenger's door glass replacement or repair
- Power is removed from the power window control unit while the power window is moving.

1. Turn the ignition switch ON (II).
2. Move the driver's or passenger's window all the way down by using the driver's window DOWN switch.
3. Open the driver's or front passenger's door.

   NOTE: Steps 4—7 must be done within 5 seconds of each other.

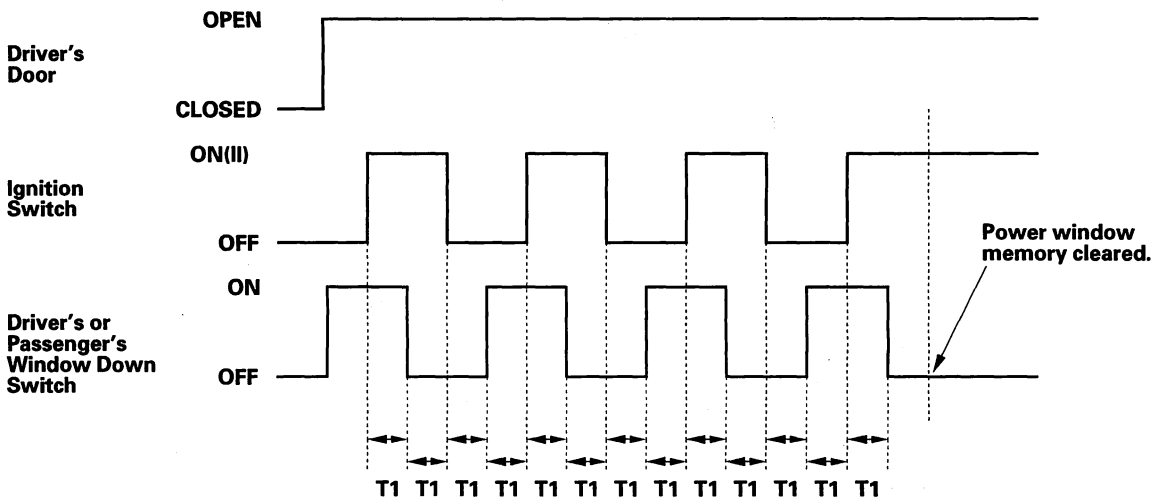


T1=Less than 5 seconds

4. Turn the ignition switch OFF.
5. Push and hold the driver's or passenger's window DOWN switch.
6. Turn the ignition switch ON (II).
7. Release the driver's or passenger's window DOWN switch.
8. Repeat step 4—7 three more times.
9. Wait 1 second.
10. Confirm that UP AUTO and DOWN AUTO do not work. If UP AUTO and DOWN work, go back to step 1.
11. Move the driver's or passenger's window all the way down by using the driver's or passenger's window DOWN switch.
12. Pull up and hold the driver's or passenger's window UP switch until the window reaches the fully closed position, then continue to hold the switch for 1 second.
13. Confirm that the power window control unit is reset by using the driver's or passenger's window UP AUTO and DOWN AUTO functions.

    If the window still does not work in AUTO, repeat the procedure several times, paying close attention to the 5 second time limit between steps.

Protected by AR



## Master Switch Input Test

NOTE: The power window control unit is built into the power window master switch.

1. Remove the power window master switch (A) (see page 22-225).

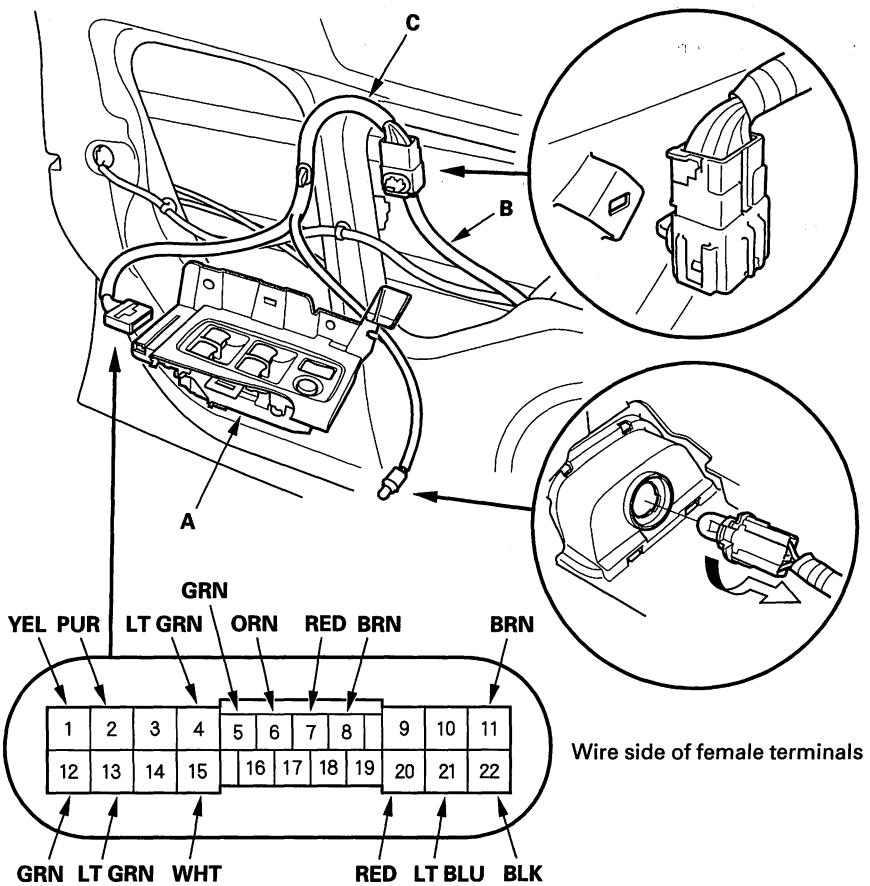


2. Reconnect the driver's door wire harness (B) to the driver's door subharness (C).

3. Inspect the connector and socket terminals to be sure they are all making good contact.

   - If the terminals are bent, loose or corroded, repair them as necessary, and recheck the system.
   - If the terminals look OK, make the following input tests at the connector.
     - If a test indicates a problem, find and correct the cause, then recheck the system.
     - If all the input tests prove OK, the power window master switch must be faulty; replace it.



BACK

Protected by AR



4. With the master switch still disconnected, make these input tests at the connector.

- If any test indicates a problem, find and correct the cause, then recheck the system.
- If all the input tests prove OK, go to step 5.

| Cavity | Wire | Test condition | Test: Desired result | Possible cause if result is not obtained |
|---|---|---|---|---|
| 20 | RED | Connect the No. 20 and the No. 15 terminals and No. 21 and No. 22 terminals momentarily with jumper wires | Check driver's power window motor operation: The window should go down. | • Blown No. 26 (20 A) fuse in the under-dash fuse/relay box<br>• Faulty driver's power window motor<br>• An open in the wire<br>• Poor ground (G501) |
| 21 | LT BLU | Connect the No. 21 and the No. 15 terminals and No. 20 and No. 22 terminals momentarily with jumper wires | Check driver's power window motor operation: The window should go up. | |
| 2 | PUR | Under all conditions | Check for continuity No. 2 terminal and the No. 3 terminal of the front passenger's power window switch 14P connector: There should be continuity. | An open in the wire |
| 13 | LT GRN | Under all conditions | Check for continuity No. 13 terminal and the No. 3 terminal of the left rear power window switch 14P connector: There should be continuity. | An open in the wire |
| 12 | GRN | Under all conditions | Check for continuity No. 12 terminal and the No. 3 terminal of the right rear power window switch 14P connector: There should be continuity. | An open in the wire |
| 8 | BRN | Ignition switch ON (II) | Check for voltage to ground: There should be about less than 1 V. | • Faulty MICU<br>• An open in the wire |

(cont'd)

Protected by AR



## Master Switch Input Test (cont'd)

5. Reconnect the 22P connector to the power window master switch. Turn the ignition switch ON (II), and make these input tests at the connector.

   - If any test indicates a problem, find and correct the cause, then recheck the system.
   - If all the input tests prove OK, the control unit must be faulty; replace the power window master switch.

| Cavity | Wire | Test condition | Test: Desired result | Possible cause if result is not obtained |
|---|---|---|---|---|
| 4 | LT GRN | Ignition switch ON (II) | Check for voltage to ground: There should be battery voltage. | • Blown No. 1 (7.5 A) fuse in the under-dash fuse/relay box<br>• An open in the wire |
| 1 | YEL | Under all conditions | Check for voltage to ground: There should be battery voltage. | • Blown No. 4 (P/W) (40 A) fuse in the under-hood fuse/relay box<br>• Faulty power window relay<br>• An open in the wire |
| 15 | WHT | Under all conditions | Check for voltage to ground: There should be battery voltage. | • Blown No. 26 (20 A) fuse in the under-dash fuse/relay box<br>• An open in the wire |
| 11 | BRN | Under all conditions | Check for voltage to ground: There should be less than 0.5 V. | • Poor ground (G501)<br>• An open in the wire |
| 22 | BLK | Under all conditions | Check for voltage to ground: There should be less than 0.5 V. | • Poor ground (G501)<br>• An open in the wire |
| 7 | RED | Ignition switch ON (II) | Check for voltage to ground: There should be battery voltage. | • Faulty driver's power window master switch<br>• Short to ground in the wire |
| 5 | GRN | Ignition switch ON (II), and driver's window switch moving up or down | Check for voltage between the No. 5 and No. 7 terminals: There should be 0 V—about 5 V—0 V— about 5 V repeatedly (a digital voltmeter should reads about 2.5 V while the window moves). | • Faulty driver's power window motor<br>• An open in the wire<br>• Short to ground in the wire |
| 6 | ORN | Ignition switch ON (II), and driver's power window switch moving up or down | Check for voltage between the No. 6 and No. 7 terminals: There should be 0 V—about 5 V—0 V— about 5 V repeatedly (a digital voltmeter should reads about 2.5 V while the window moves). | |

6. Reset the power window control unit (see page 22-213).



BACK

Protected by AR



## Front Passenger's Power Window Switch Input Test

NOTE: The power window control unit is built into the front passenger's window switch.

1. Remove the front passenger's power window switch (A) (see page 22-226).

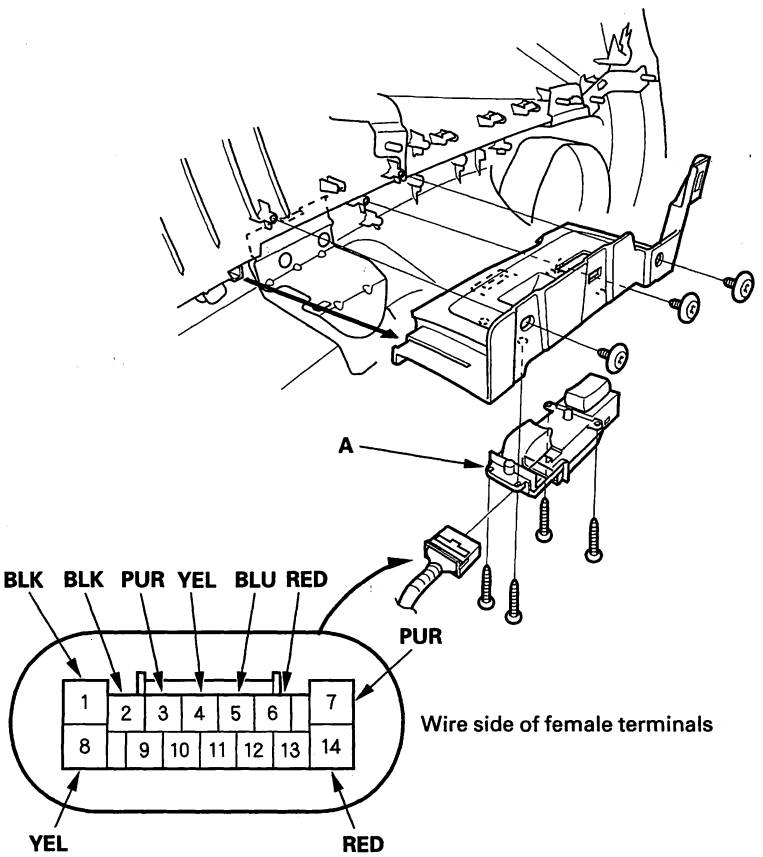


2. Reconnect the front passenger's door wire harness to the front passenger's door subharness.

3. Inspect the connector and socket terminals to be sure they are all making good contact.

   - If the terminals are bent, loose or corroded, repair them as necessary, and recheck the system.
   - If the terminals look OK, make the following input tests at the connector.
     - If a test indicates a problem, find and correct the cause, then recheck the system.
     - If all the input tests prove OK, the front passenger's power window switch must be faulty; replace it.

(cont'd)

Protected by AR



## Front Passenger's Power Window Switch Input Test (cont'd)

4. With the switch still disconnected, make these input tests at the connector.

   - If any test indicates a problem, find and correct the cause, then recheck the system.
   - If all the input tests prove OK, go to step 5.

| Cavity | Wire | Test condition | Test: Desired result | Possible cause if result is not obtained |
|---|---|---|---|---|
| 3 | PUR | Under all conditions | Check for continuity No. 3 terminal and the No. 2 terminal of the power window master switch 22P connector: There should be continuity. | An open in the wire |
| 14 | RED | Connect the No. 14 and the No. 7 terminals and No. 8 and No. 1 terminals momentarily with jumper wires | Check front passenger's power window motor operation: The window should go down. | • Blown No. 30 (20 A) fuse in the under-dash fuse/relay box<br>• Faulty front passenger's power window motor<br>• An open in the wire<br>• Poor ground (G505) |
| 8 | YEL | Connect the No. 8 and the No. 7 terminals and No. 14 and No. 1 terminals momentarily with jumper wires | Check driver's front passenger's power window motor operation: The window should go up. | |

5. Reconnect the 14P connector to the front passenger's power window switch. Turn the ignition switch ON (II), and make these input tests at the connector.

   - If any test indicates a problem, find and correct the cause, then recheck the system.
   - If all the input tests prove OK, the control unit must be faulty; replace the front passenger's power window switch.

| Cavity | Wire | Test condition | Test: Desired result | Possible cause if result is not obtained |
|---|---|---|---|---|
| 7 | PUR | Under all conditions | Check for voltage to ground: There should be battery voltage. | • Blown No. 30 (20 A) fuse in the under-dash fuse/relay box<br>• An open in the wire |
| 1 | BLK | Under all conditions | Check for voltage to ground: There should be less than 0.5 V. | • Poor ground (G505)<br>• An open in the wire |
| 2 | BLK | Under all conditions | Check for voltage to ground: There should be less than 0.5 V. | • Poor ground (G505)<br>• An open in the wire |
| 6 | RED | Ignition switch ON (II) | Check for voltage to ground: There should be battery voltage. | Short to ground in the wire |
| 5 | BLU | Ignition switch ON (II), and front passenger's power window switch moving up or down | Check for voltage between the No. 5 and No. 6 terminals: There should be 0 V—about 5 V—0 V— about 5 V repeatedly (a digital voltmeter should reads about 2.5 V while the window moves). | • Faulty front passenger's power window motor<br>• An open in the wire<br>• Short to ground in the wire |
| 4 | YEL | Ignition switch ON (II), and front passenger's power window switch moving up or down | Check for voltage between the No. 4 and No. 6 terminals: There should be 0 V—about 5 V—0 V— about 5 V repeatedly (a digital voltmeter should reads about 2.5 V while the window moves). | |

6. Reset the power window control unit (see page 22-213).



BACK

Protected by AR



## Left Rear Power Window Switch Input Test

1. Remove the left rear power window switch (see page 22-225).

2. Disconnect the 14P connector (A) from the left rear power window switch (B).

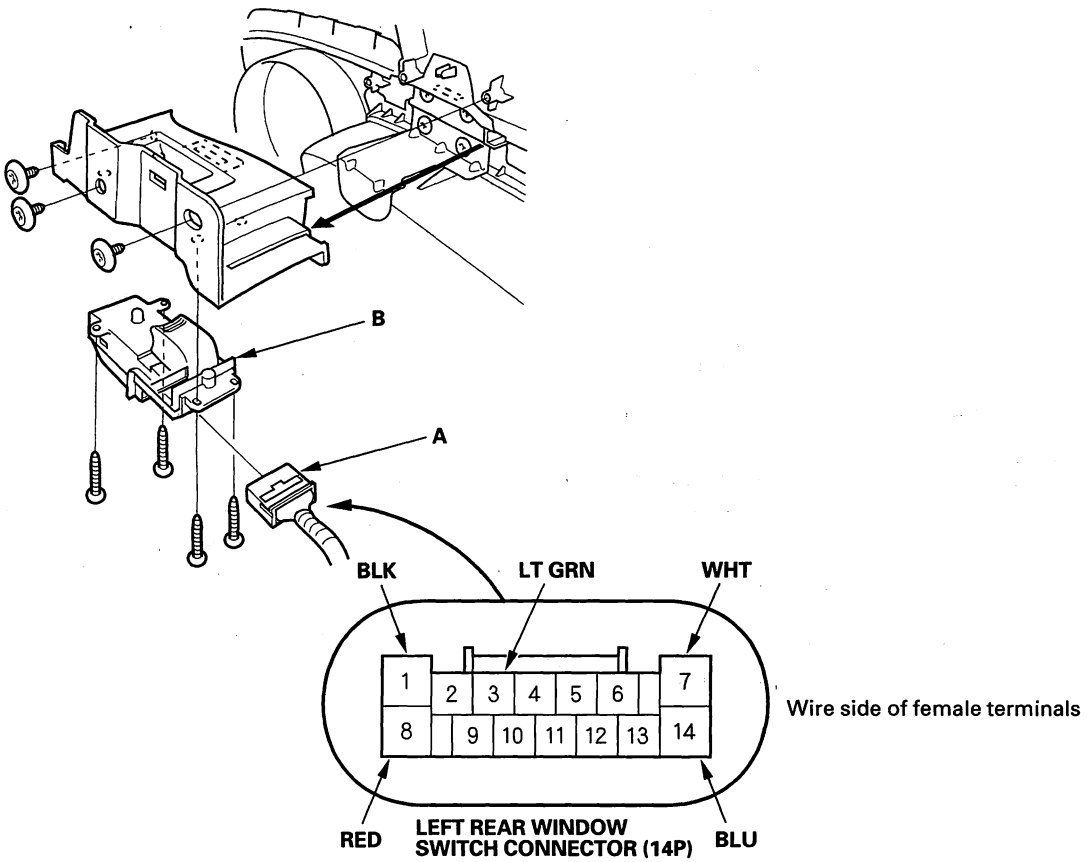


3. Inspect the connector and socket terminals to be sure they are all making good contact.

   - If the terminals are bent, loose or corroded, repair them as necessary and recheck the system.
   - If the terminals look OK, go to step 4.

(cont'd)

Protected by AR



## Left Rear Power Window Switch Input Test (cont'd)

4. With the connector still disconnected, make these input tests at the connector.

- If any test indicates a problem, find and correct the cause, then recheck the system.
- If all the input tests prove OK, go to step 5.

| Cavity | Wire | Test condition | Test: Desired result | Possible cause if result is not obtained |
|---|---|---|---|---|
| 3 | LT GRN | Power window master switch 22P connector disconnected | Check for continuity between the No. 3 terminal and power window master switch 22P connector No. 13 terminal: There should be continuity. | An open in the wire |
| | | | Check for continuity to ground: There should be continuity. | |
| 8 | RED | Connect the No. 8 terminal to battery power with a jumper wire, and connect the No. 14 terminal to body. | Check for the left rear power window motor operation: The motor should run (the window should go down). | • Faulty left rear power window motor<br>• An open in the wire |
| 14 | BLU | Connect the No. 14 terminal to battery power with a jumper wire, and connect the No. 8 terminal to body. | Check for the left rear power window motor operation: The motor should run (the window should go up). | • Faulty left rear power window motor<br>• An open in the wire |

5. Reconnect the connector to the left rear power window switch, and make these input tests at the connector.

- If any test indicates a problem, find and correct the cause, then recheck the system.
- If all the input tests prove OK, the left rear power window switch must be faulty; replace it.

| Cavity | Wire | Test condition | Test: Desired result | Possible cause if result is not obtained |
|---|---|---|---|---|
| 1 | BLK | Ignition switch ON (II) and left rear power window switch pushed UP or DOWN | Check for voltage to ground: There should be less than 0.5 V. | • Poor ground (G601)<br>• An open in the wire |
| 7 | WHT | Ignition switch ON (II) and left rear power window switch pushed UP or DOWN | Check for voltage to ground: There should be battery voltage. | • Blown No. 33 (20 A) fuse in the under-dash fuse/relay box<br>• Faulty power window relay<br>• An open in the wire |



BACK

Protected by AR



## Right Rear Power Window Switch Input Test

1. Remove the right rear power window switch (see page 22-225).
2. Disconnect the 14P connector (A) from the right rear power window switch (B).

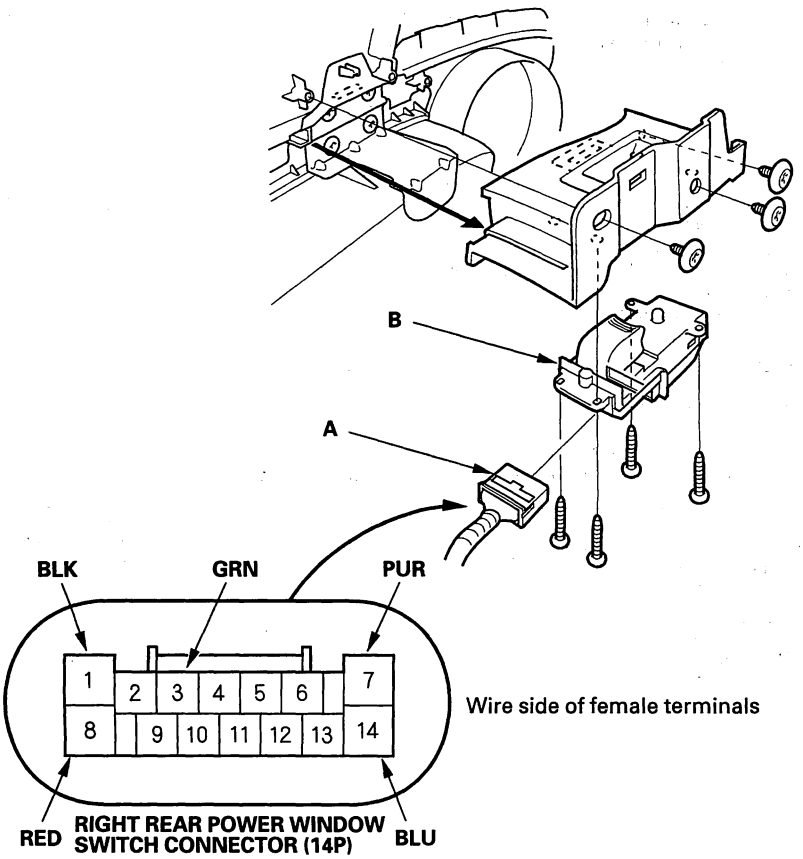


3. Inspect the connector and socket terminals to be sure they are all making good contact.
   - If the terminals are bent, loose or corroded, repair them as necessary and recheck the system.
   - If the terminals look OK, go to step 4.

(cont'd)

Protected by AR



## Right Rear Power Window Switch Input Test (cont'd)

4. With the connector still disconnected, make these input tests at the connector.

- If any test indicates a problem, find and correct the cause, then recheck the system.
- If all the input tests prove OK, go to step 5.

| Cavity | Wire | Test condition | Test: Desired result | Possible cause if result is not obtained |
|---|---|---|---|---|
| 3 | GRN | Power window master switch 22P connector disconnected | Check for continuity between the No. 3 terminal and power window master switch 22P connector No. 12 terminal: There should be continuity. | An open in the wire |
| | | | Check for continuity to ground: There should be continuity. | Short to ground in the wire |
| 8 | RED | Connect the No. 8 terminal to battery power with a jumper wire, and connect the No. 14 terminal to body. | Check for the right rear power window motor operation: The motor should run (the window should go up). | • Faulty right rear power window motor<br>• An open in the wire |
| 14 | BLU | Connect the No. 14 terminal to battery power with a jumper wire, and connect the No. 8 terminal to body. | Check for the right rear power window motor operation: The motor should run (the window should go down). | • Faulty right rear power window motor<br>• An open in the wire |

5. Reconnect the connector to the right rear power window switch, and make these input tests at the connector.

- If any test indicates a problem, find and correct the cause, then recheck the system.
- If all the input tests prove OK, the right rear power window switch must be faulty; replace it.

| Cavity | Wire | Test condition | Test: Desired result | Possible cause if result is not obtained |
|---|---|---|---|---|
| 1 | BLK | Ignition switch ON (II) and right rear power window switch pushed UP or DOWN | Check for voltage to ground: There should be less than 0.5 V. | • Poor ground (G561)<br>• An open in the wire |
| 7 | PUR | Ignition switch ON (II) and left rear power window switch pushed UP or DOWN | Check for voltage to ground: There should be battery voltage. | • Blown No. 32 (20 A) fuse in the under-dash fuse/relay box<br>• Faulty power window relay<br>• An open in the wire |



BACK

Protected by AR



# Driver's and Front Passenger's Power Window Motor Test

1. Remove the door panel (see page 20-6).

2. Disconnect the 6P connector from the power window motor.

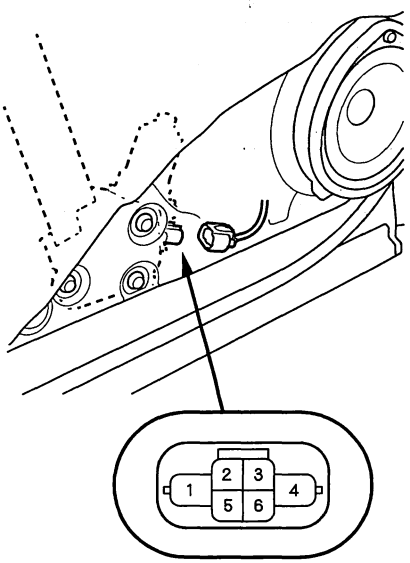


**Motor Test**

3. Test the motor in each direction by connecting battery power and ground according to the table. When the motor stops running, disconnect one lead immediately.

| Terminal / Direction | 1 | 4 |
|---|---|---|
| UP | ⊖ | ⊕ |
| DOWN | ⊕ | ⊖ |

4. If the motor does not run or fails to run smoothly, replace it.

**Pulser Test**

5. Reconnect the 6P connector to the power window motor.

6. Turn the ignition switch ON (II).

7. Check for voltage between the terminals.

   - There should be battery voltage between the No. 5 (+) and No. 2 (−) terminals.
   - Connect an analog voltmeter between the No. 6 (+) and No. 2 (−) terminals, and run the power window motor down or up. The voltmeter needle should move back and forth alternately (a digital voltmeter reads about 2.5 V).
   - Connect an analog voltmeter between the No. 3 (+) and No. 2 (−) terminals, and run the power window motor down or up. The voltmeter needle should move back and forth alternately (a digital voltmeter reads about 2.5 V).

8. If the voltage is not as specified, do the power window switch input test:

   - Driver's terminals No. 5, 6, 7, and 11 (see step 5 on page 22-216).
   - Front passenger's terminals No. 2, 4, 5 and 6 (see page 22-219).

9. If the switch is OK, replace the power window motor.

10. Reset the power window control unit (see page 22-213).

Protected by AR



## Rear Passenger's Power Window Motor Test

1. Remove the door panel (see page 20-17).
2. Disconnect the 2P connector from the power window motor.

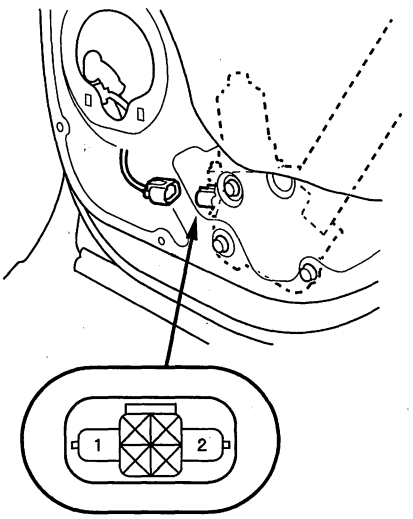


3. Test the motor by connecting battery power and ground according to the table. When the motor stops running, disconnect one lead immediately.

| Direction \ Terminal | 1 | 2 |
|---|---|---|
| UP | ⊕ | ⊖ |
| DOWN | ⊖ | ⊕ |

4. If the motor does not run or fails to run smoothly, replace it.



BACK

Protected by AR



# Power Window Switch Replacement

## Driver's

1. Remove the driver's door panel (see page 20-6).

2. Disconnect the 22P conector (A) from the power window master switch.

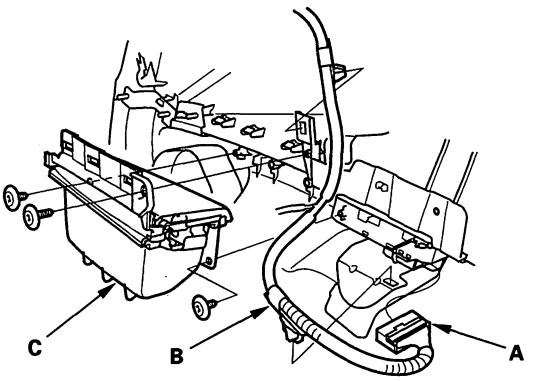


3. Remove the driver's door subharness (B) from the power window master switch.

4. Remove the three screws from the door panel, then pull up on the door pocket (C) to release the clips.

5. Remove the three screws and the power window master switch (A) from the door panel.

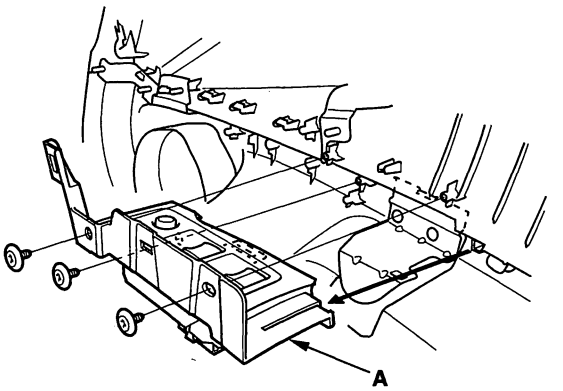


6. Remove the four screws and the power window master switch (A).

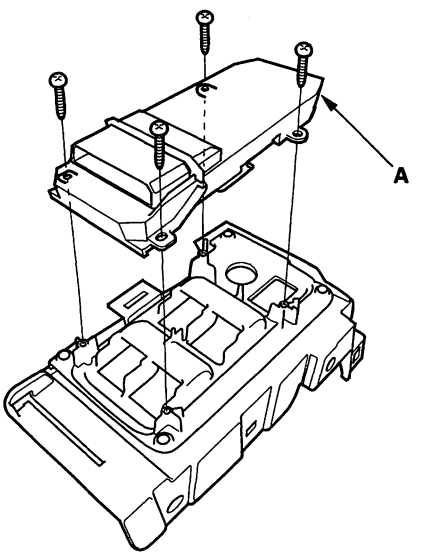


7. Install the switch in the reverse order of removal.

8. After replacement, reset the power window control unit (see page 22-213).

(cont'd)

Protected by AR



## Power Window Switch Replacement (cont'd)

### Front passenger's

1. Removal the front passenger's door panel (see page 20-6).

2. Disconnect the 14P connector (A) from the power window switch.

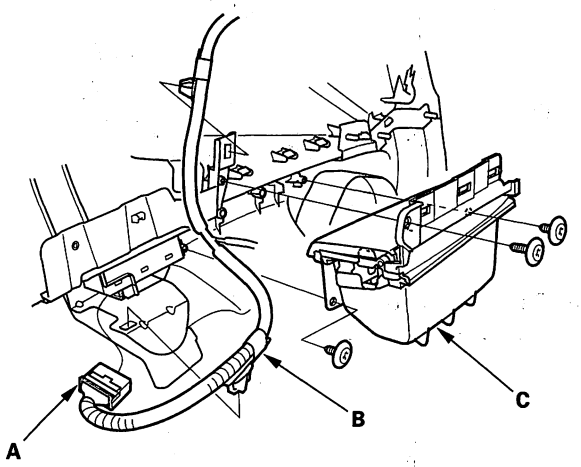


3. Remove the front passenger's door subharness (B) from the power window switch.

4. Remove the three screws from the door panel, then pull up on the door pocket (C) to release the clips.

5. Remove the three screws and the power window switch (A) from the door panel.

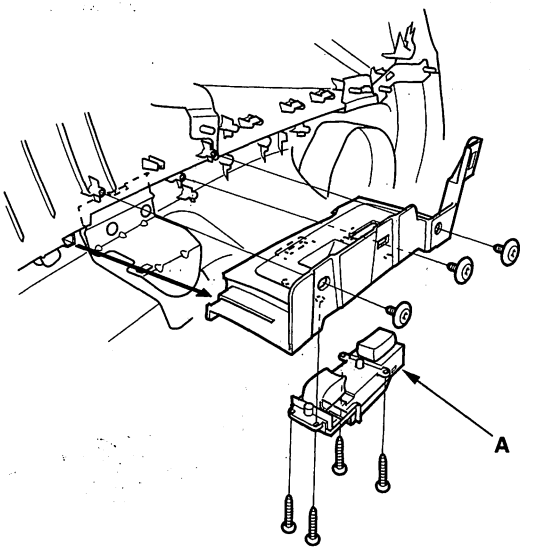


6. Remove the four screws and the power window switch.

7. Install the switch in the reverse order of removal.

8. After replacement, reset the power window control unit (see page 22-213).



BACK

Protected by AR



### Rear passenger's

1. Remove the door panel (see page 20-17).
2. Disconnect the 14P connector from the power window switch (A).

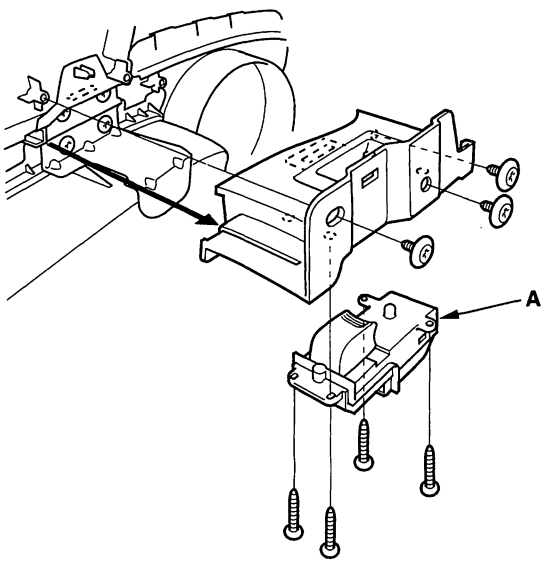


3. Remove the screws and the power window switch from the door panel.
4. Remove the four screws and the power window switch.
5. Install the switch in the reverse order of removal.

Protected by AR



## Component Location Index

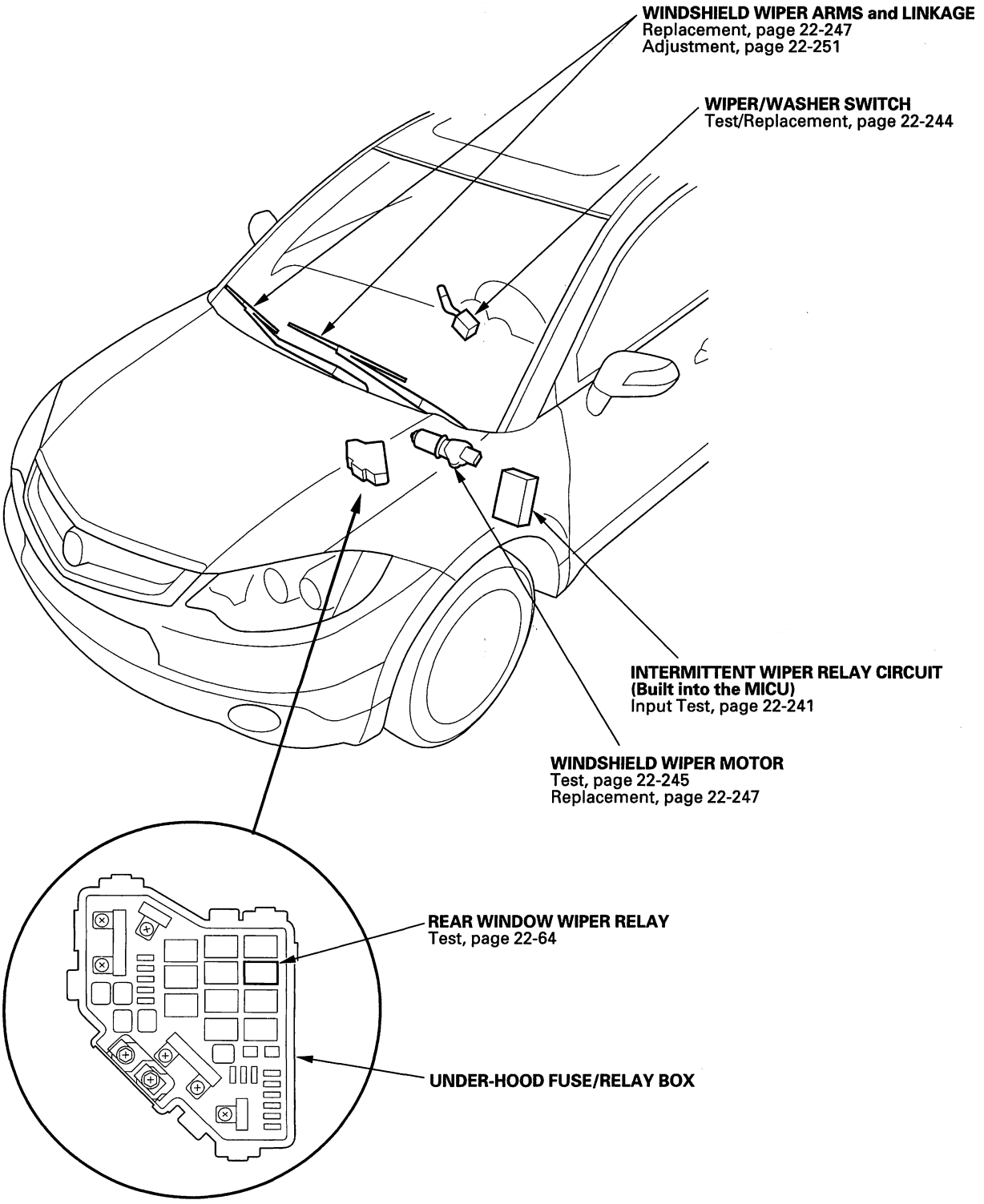




BACK

Protected by AR



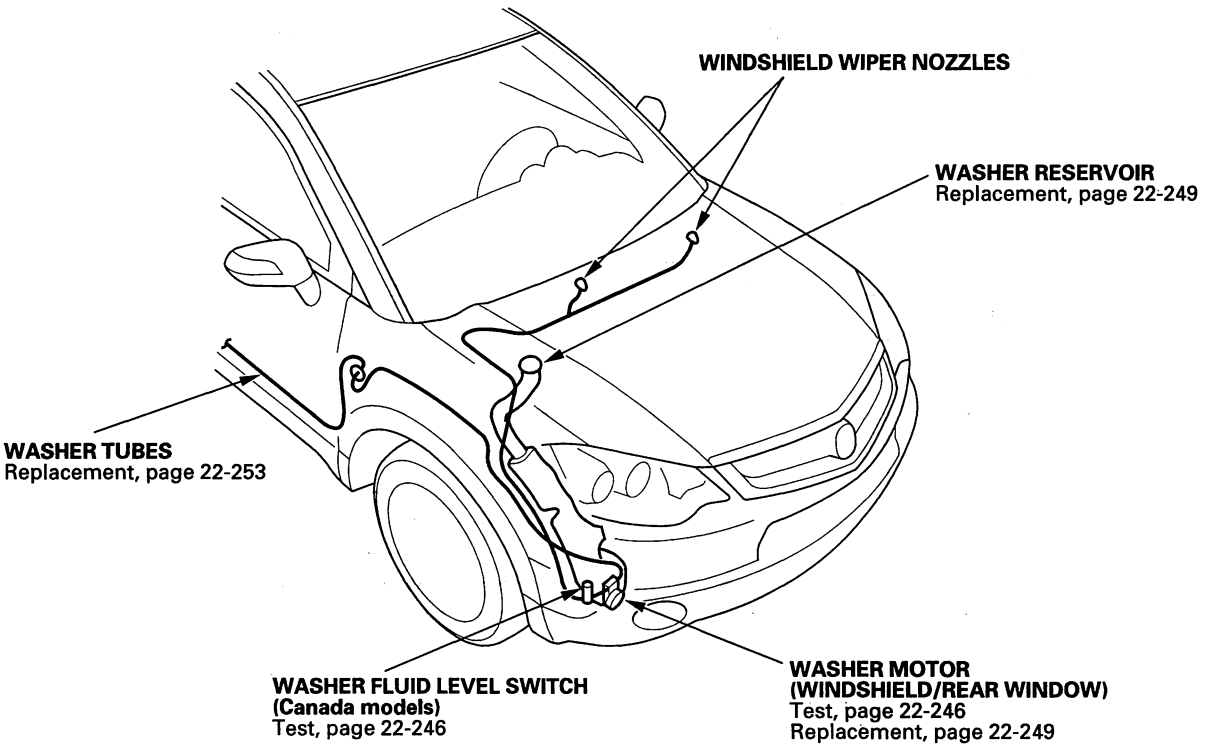


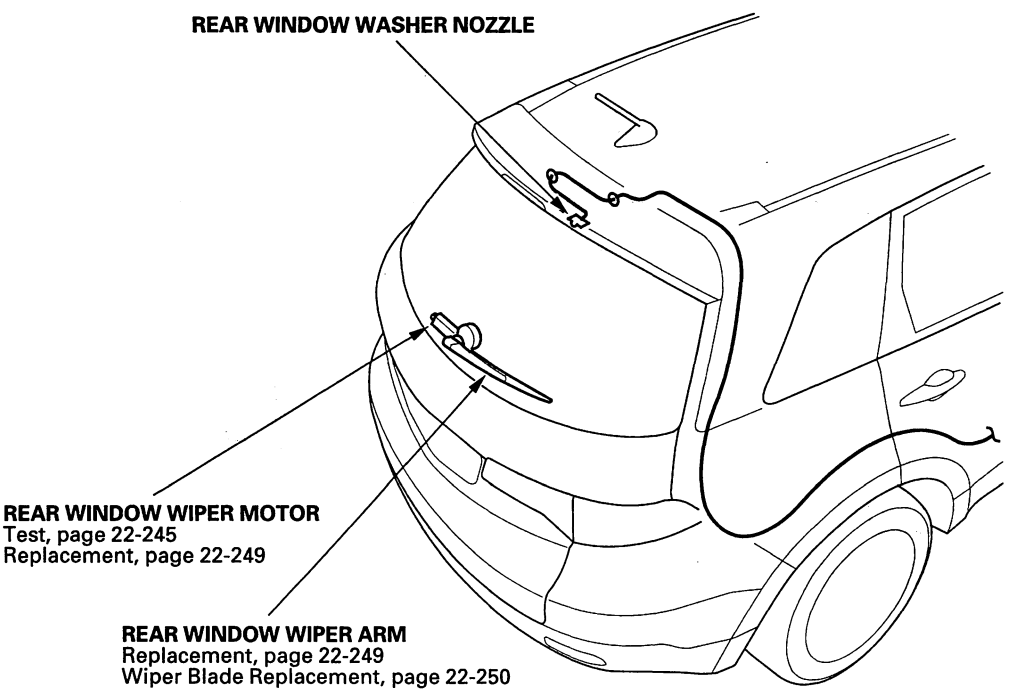

Protected by AR



## Circuit Diagram - Windshield

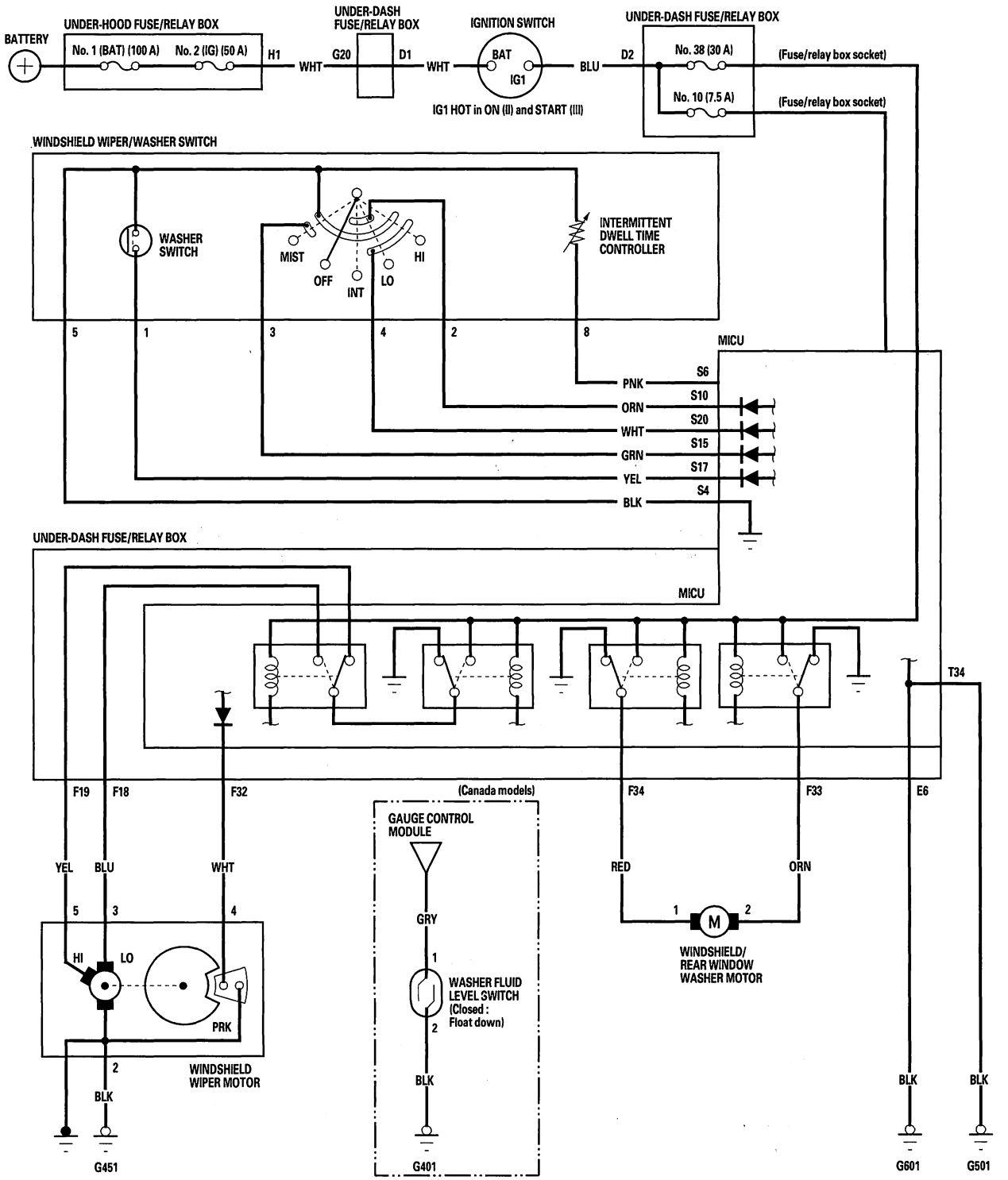




BACK

Protected by AR



## Circuit Diagram - Rear Window

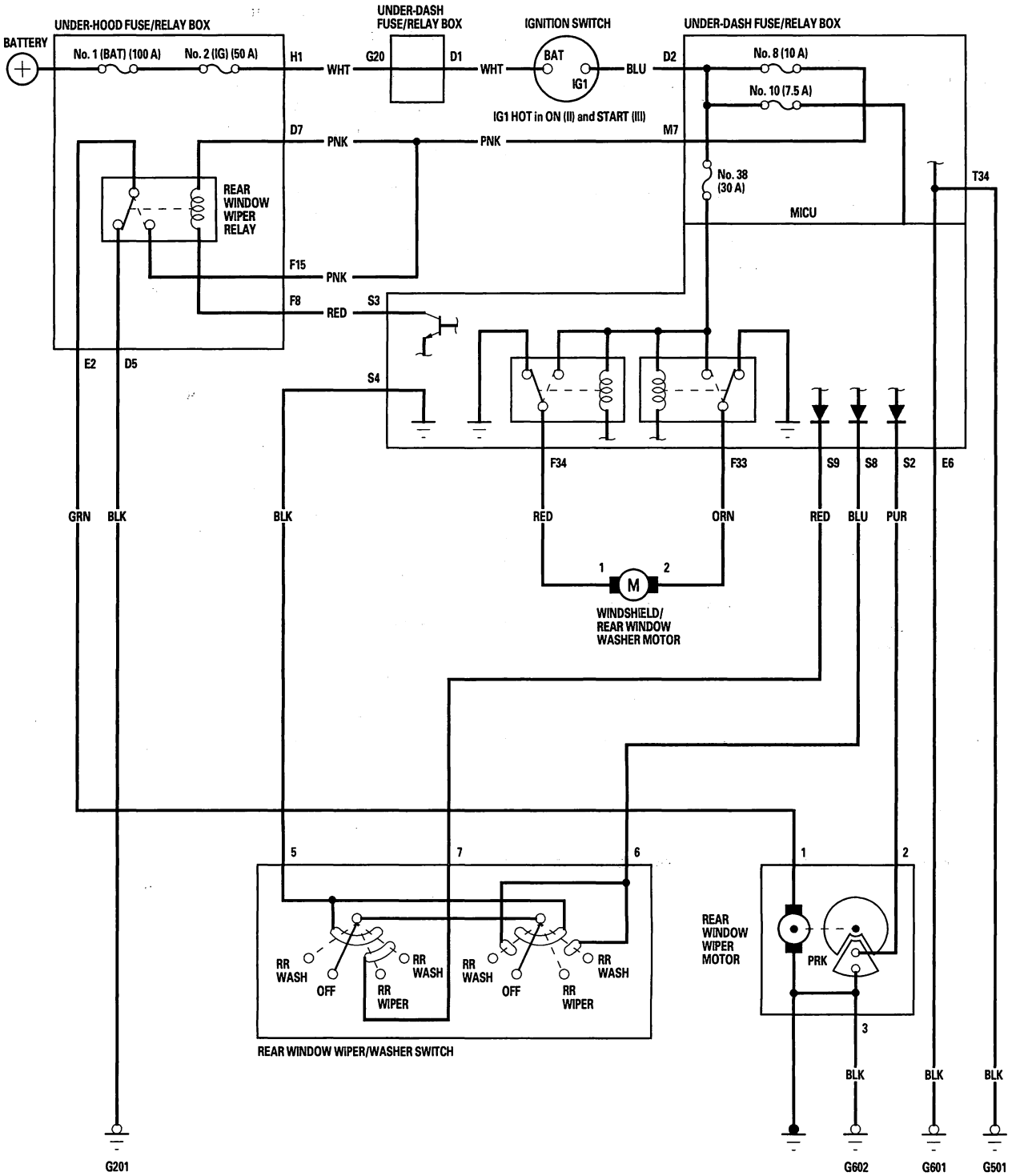

Protected by AR



## DTC Troubleshooting

### DTC B1028: Rear Window Wiper Motor (Park) Signal Error

NOTE: If you are troubleshooting multiple DTCs, be sure to follow the instructions in B-CAN System Diagnosis Test Mode A (see page 22-88).

1. Clear the DTCs with the HDS.

2. Turn the ignition switch OFF, and then back ON (II).

3. Turn the rear wiper switch to ON for 15 seconds or more, then turn the switch OFF.

   *Does the rear window wiper motor run?*

   **YES**—Go to step 4.

   **NO**—Go to step 11.

4. Check for DTCs with the HDS.

   *Is DTC B1028 indicated?*

   **YES**—Go to step 5.

   **NO**—Intermittent failure. The rear window wiper (Park) signal is OK at this time. Check for loose or poor connections.

5. Do the rear wiper motor test (see page 22-247).

   *Does the rear wiper motor run and does it pulse normally?*

   **YES**—Go to step 6.

   **NO**—Replace the rear wiper motor and recheck. ■

6. Disconnect the under-dash fuse/relay box connector S (20P) and rear wiper motor 4P connector.

7. Check for continuity between the No. 2 terminal of the rear wiper motor 4P connector and No. 2 terminal of the under-dash fuse/relay box connector S (20P).

**UNDER-DASH FUSE/RELAY BOX CONNECTOR S (20P)**
Wire side of female terminals

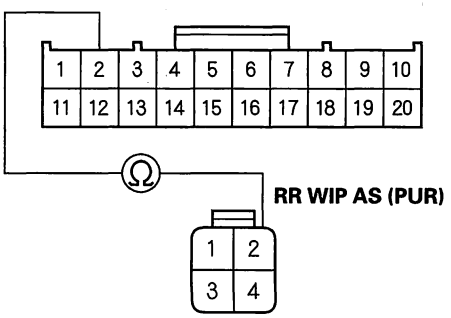


**REAR WIPER MOTOR 4P CONNECTOR**
Wire side of female terminals

*Is there continuity?*

**YES**—Go to step 8.

**NO**—Repair an open in the PUR wire. ■

8. Check for continuity between the rear window wiper motor 4P connector No. 2 terminal and body ground.

**REAR WIPER MOTOR 4P CONNECTOR**

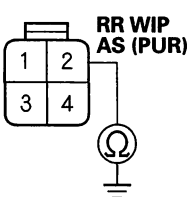


Wire side of female terminals

*Is there continuity?*

**YES**—Repair a short to ground in the PUR wire. ■

**NO**—Go to step 9.



BACK

Protected by AR



9. Turn the ignition switch ON (II).

10. Measure the voltage between the rear window wiper motor 4P conector No. 2 terminal and body ground.

**REAR WIPER MOTOR 4P CONNECTOR**

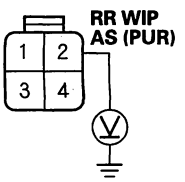


Wire side of female terminals

*Is there voltage?*

**YES**—Repair a short to power in the PUR wire.■

**NO**—Faulty MICU; replace the under-dash fuse/relay box.■

11. Turn the ignition switch OFF.

12. Check the No. 8 (10 A) fuse in the under-dash fuse/relay box.

*Is the fuse OK?*

**YES**—Go to step 13.

**NO**—Replace the fuse and recheck the system.■

13. Do the wiper motor test (see page 22-247).

*Does the wiper motor run normally?*

**YES**—Go to step 14.

**NO**—Replace the windshield wiper motor and recheck.■

14. Do the rear window wiper relay test (see page 22-64).

*Is the relay OK?*

**YES**—Go to step 15.

**NO**—Replace the rear window wiper relay and recheck.■

15. Turn the igniton switch ON (II).

16. Measure the voltage between the No. 7 terminal of the under-hood fuse/relay box connector D (8P) and body ground.

**UNDER-HOOD FUSE/RELAY BOX CONNECTOR D (8P)**

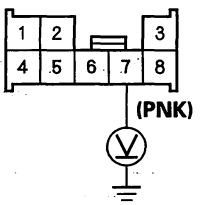


Wire side of female terminals

*Is there voltage?*

**YES**—Go to step 17.

**NO**—Repair an open in the PNK wire or blown No. 8 fuse in the under-dash fuse/relay box.■

17. Measure the voltage between the NO. 15 terminal of the under-hood fuse/relay box connector F (20P) and body ground.

**UNDER-HOOD FUSE/RELAY BOX CONNECTOR F (20P)**

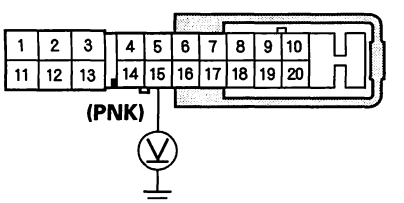


Wire side of female terminals

*Is there voltage?*

**YES**—Go to step 18.

**NO**—Repair an open in the PNK wire.■

(cont'd)

Protected by AR



## DTC Troubleshooting (cont'd)

18. Turn the ignition switch OFF.

19. Disconnect the under-hood fuse/relay box connector E (10P) and rear wiper motor 4P connector.

20. Check for continuity between the No. 1 terminal of the rear window wiper motor 4P connector and No. 2 terminal of the under-hood fuse/relay box connector E (10P).

**UNDER-HOOD FUSE/RELAY BOX CONNECTOR E (10P)**
Wire side of female terminals

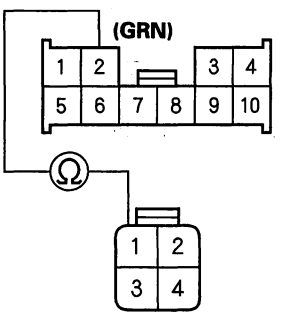


**REAR WIPER MOTOR 4P CONNECTOR**
Wire side of female terminals

*Is there continuity?*

**YES**—Go to step 21.

**NO**—Repair open in the GRN wire.■

21. Check for continuity between the rear window wiper motor 4P connector No. 3 terminal and body ground.

**REAR WIPER MOTOR 4P CONNECTOR**

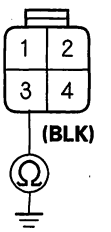


Wire side of female terminals

*Is there continuity?*

**YES**—Go to step 22.

**NO**—Repair open in the BLK wire or poor ground (G602).■

22. Disconnect the under-hood fuse/relay box connector F (20P) and under-hood fuse/relay box connector S (20P).



BACK

Protected by AR



23. Check for continuity between the No. 8 terminal of the under-hood fuse/relay box connector F (20P) and No. 3 terminal of the under-dash fuse/relay box connector S (20P).

**UNDER-HOOD FUSE/RELAY BOX CONNECTOR F (20P)**
Wire side of female terminals

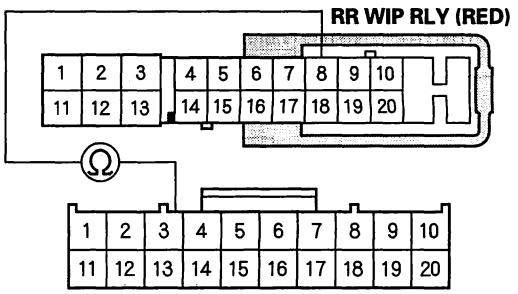


**UNDER-DASH FUSE/RELAY BOX CONNECTOR S (20P)**
Wire side of female terminals

*Is there continuity?*

**YES**—Repair open in the RED wire.■

**NO**—Faulty MICU; replace the under-dash fuse/relay box.■

Protected by AR



## DTC Troubleshooting (cont'd)

### DTC B1077: Windshield Wiper Motor (Park) Signal Error

NOTE: If you are troubleshooting multiple DTCs, be sure to follow the instructions in B-CAN System Diagnosis Test Mode A (see page 22-88).

1. Clear the DTCs with the HDS.
2. Turn the ignition switch OFF, and then back ON (II).
3. Turn the wiper switch to LOW or HIGH for 15 seconds or more, then turn the switch OFF.

   *Do the windshield wipers run?*

   **YES**—Go to step 4.

   **NO**—Go to step 12.
4. Check for DTCs with the HDS.

   *Is DTC B1077 indicated?*

   **YES**—Go to step 5.

   **NO**—Intermittent failure. The windshield wiper system is OK at this time. Check for loose or poor connections. ■
5. Turn the ignition switch OFF.
6. Do the wiper motor test (see page 22-245).

   *Does the wiper motor run normally and does it pulse?*

   **YES**—Go to step 7.

   **NO**—Replace the windshield wiper motor and recheck. ■
7. Disconnect the under-dash fuse/relay box connector F (34P) and windshield wiper motor 5P connector.
8. Check for continuity between the No. 4 terminal of the windshield wiper motor 5P connector and No. 32 terminal of the under-dash fuse/relay box connector F (34P).

**UNDER-DASH FUSE/RELAY BOX CONNECTOR F (34P)**
Wire side of female terminals

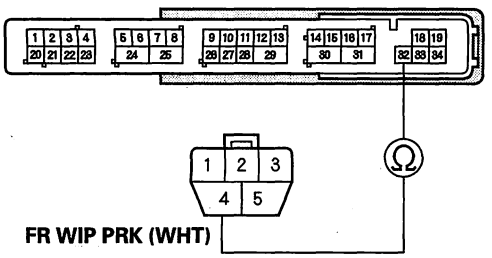


**WINDSHIELD WIPER MOTOR 5P CONNECTOR**
Wire side of female terminals

*Is there continuity?*

**YES**—Go to step 9.

**NO**—Repair open in the WHT wire. ■



BACK

Protected by AR



9. Check for continuity between the No. 4 terminal of the windshield wiper motor 5P connector and body ground.

**WINDSHIELD WIPER MOTOR 5P CONNECTOR**

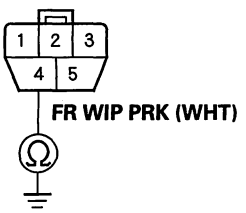


Wire side of female terminals

*Is there continuity?*

**YES**—Repair short in the WHT wire. ■

**NO**—Go to step 10.

10. Turn the ignition switch ON (II).

11. Measure the voltage between the No. 4 terminal of the windshield wiper motor 5P connector and body ground.

**WINDSHIELD WIPER MOTOR 5P CONNECTOR**

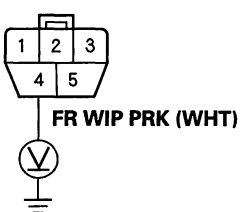


Wire side of female terminals

*Is there voltage?*

**YES**—Repair short to power in the WHT wire. ■

**NO**—Faulty MICU; replace the under-dash fuse/relay box. ■

12. Turn the ignition switch OFF.

13. Check the No. 38 (30 A) fuse in the under-dash fuse/relay box.

*Is the fuse OK?*

**YES**—Go to step 14.

**NO**—Replace the fuse and recheck the system. ■

14. Do the wiper motor test (see page 22-245).

*Does the wiper motor run normally?*

**YES**—Go to step 15.

**NO**—Replace the windshield wiper motor and recheck. ■

15. Reconnect the windshield wiper motor 5P connector.

(cont'd)

Protected by AR



## DTC Troubleshooting (cont'd)

16. Measure the voltage between the No. 18 (LO) and No. 19 (HI) terminals of the under-dash fuse/relay box connector F (34P) and body ground with the wiper switch in the corresponding position individually.

**UNDER-DASH FUSE/RELAY BOX CONNECTOR F (34P)**

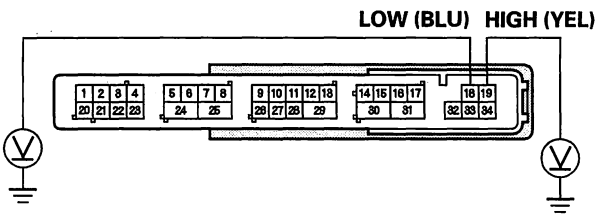


Wire side of female terminals

*Is there battery voltage?*

**YES**—Go to step 17.

**NO**—Faulty MICU; replace the under-dash fuse/relay box.■

17. Measure the voltage between the No. 3 (LO) and No. 5 (HI) terminals of the windshield wiper motor 5P connector and body ground with the wiper switch in the corresponding position individually.

**WINDSHIELD WIPER MOTOR 5P CONNECTOR**

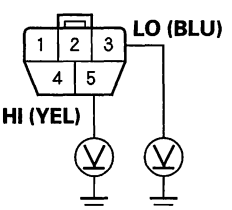


Wire side of female terminals

*Is there battery voltage?*

**YES**—Go to step 18.

**NO**—Repair an open in the BLU (LO) or YEL (HI) wire.■

18. Measure the voltage between the No. 2 terminal of the windshield wiper motor 5P connector and body ground.

**WINDSHIELD WIPER MOTOR 5P CONNECTOR**

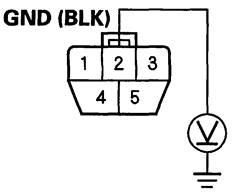


Wire side of female terminals

*Is there less than 1 V?*

**YES**—Faulty MICU; replace the under-dash fuse/relay box.■

**NO**—Repair an open in the BLK wire or poor ground (G451).■



BACK

Protected by AR



**DTC B1281:** Windshield Wiper Switch MIST Position Circuit Malfunction

**DTC B1282:** Windshield Wiper Switch INT (AUTO) Position Circuit Malfunction

**DTC B1283:** Windshield Wiper Switch LOW Position Circuit Malfunction

**DTC B1284:** Windshield Wiper Switch HIGH Position Circuit Malfunction

NOTE: If you are troubleshooting multiple DTCs, be sure to follow the instructions in B-CAN System Diagnosis Test Mode A (see page 22-88).

1. Clear the DTCs with the HDS.
2. Turn the ignition switch OFF and then back ON (II).
3. Turn the windshield wiper switch in MIST, INT, LOW, HIGH and OFF positions.
4. Check the DTCs with the HDS.

   *Is DTC B1281, B1282, B1283 or B1284 indicated?*

   **YES**—Go to step 5.

   **NO**—Intermittent failure, the wiper system is OK at this time. Check for loose or poor connections. ■

5. Select WIPERS from the BODY ELECTRICAL menu, and enter the DATA LIST.
6. Check the ON/OFF information of the WINDSHIELD WIPER SWITCH (MIST), WINDSHIELD WIPER SWITCH (INT), WINDSHIELD WIPER SWITCH (LOW) and WINDSHIELD WIPER SWITCH (HIGH) in the DATA LIST.

   *Are the WINDSHIELD WIPER SWITCH (MIST) information indicator OFF, WINDSHIELD WIPER SWITCH (INT) information indicator OFF, WINDSHIELD WIPER SWITCH (LOW) information indicator OFF and WINDSHIELD WIPER SWITCH (HIGH) information indicator OFF with the windshield wiper switch in OFF position?*

   **YES**—Go to step 13.

   **NO**—Go to step 7.

7. Turn the ignition switch OFF.
8. Disconnect the 8P connector from the windshield wiper switch.
9. Check the ON/OFF information of the WINDSHIELD WIPER SWITCH (MIST), WINDSHIELD WIPER SWITCH (INT), WINDSHIELD WIPER SWITCH (LOW) and WINDSHIELD WIPER SWITCH (HIGH) in the DATA LIST.

   *Are the information indicators OFF?*

   **YES**—Faulty windshield wiper switch; replace it. ■

   **NO**—Go to step 10.

10. Turn the ignition switch OFF.
11. Disconnect the under-dash fuse/relay box connector S (20P).

(cont'd)

Protected by AR



## DTC Troubleshooting (cont'd)

12. Check for continuity between the body ground and under-dash fuse/relay box connector S (20P) terminals No. 10, No. 20 and No. 15 individually.

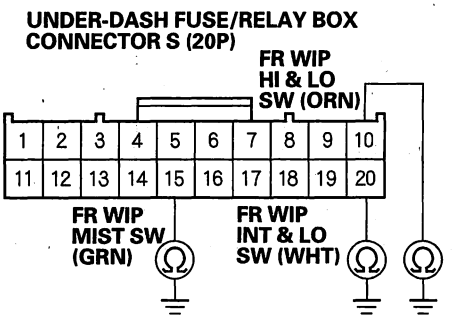


Wire side of female terminals

*Is there continuity?*

**YES**—Repair a short to ground in the wire.■

**NO**—Faulty MICU; replace the under-dash fuse/relay box.■

13. Check the ON/OFF information in the DATA LIST for WINDSHIELD WIPER SWITCH (MIST) with the windshield wiper switch in the MIST position, WINDSHIELD WIPER SWITCH (INT) with the windshield wiper switch in the INT position, WINDSHIELD WIPER SWITCH (LOW) with the windshield wiper switch in the LOW position, and WINDSHIELD WIPER SWITCH (HIGH) with the windshield wiper switch in the HIGH position.

*Are all the information indicators ON?*

**YES**—Faulty MICU; replace the under-dash fuse/relay box.■

**NO**—Go to step 14.

14. Turn the ignition switch OFF.

15. Check the windshield wiper switch (see page 22-244).

*Is the windshield wiper switch OK?*

**YES**—Go to step 16.

**NO**—Faulty windshield wiper switch, replace it.■

16. Disconnect the under-dash fuse/relay box connector S (20P).

17. Check for continuity between the under-dash fuse/relay box connector S (20P) No. 4, No. 10, No. 15 and No. 20 terminals and the windshield wiper switch 8P connector No. 5, No. 2 No. 3 and No. 4 terminals.

**UNDER-DASH FUSE/RELAY BOX CONNECTOR S (20P)**
Wire side of female terminals

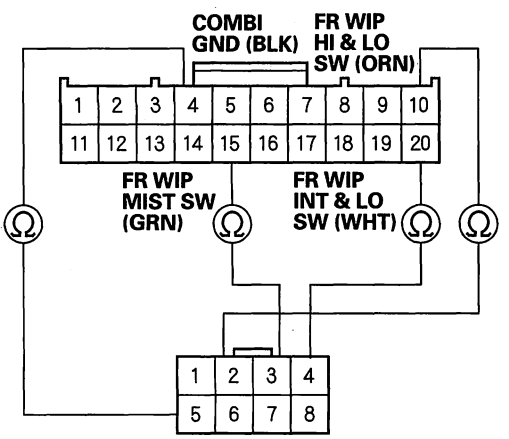


**WINDSHIELD WIPER SWITCH 8P CONNECTOR**
Wire side of female terminals

*Is there continuity?*

**YES**—Faulty MICU; replace the under-dash fuse/relay box.■

**NO**—Repair an open in the wire.■



BACK

Protected by AR



## MICU Input Test

1. Before troubleshooting the wiper/washer system, troubleshoot the B-CAN System Diagnosis Test Mode A (see page 22-88), and check the No. 8 (10 A), No. 10 (7.5 A) and No. 38 (30 A) fuses in the under-dash fuse/relay box.

2. Disconnect the under-dash fuse/relay box connectors E, F, S, and T.

   NOTE: All connector views are wire side of female terminals.

**UNDER-DASH FUSE/RELAY BOX CONNECTOR E (42P)**

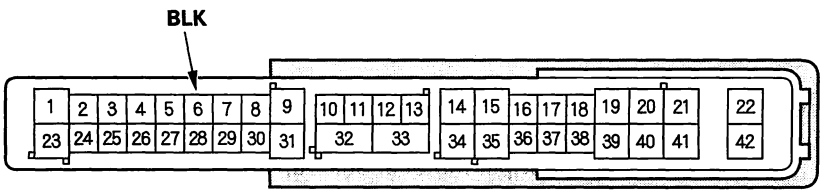


**UNDER-DASH FUSE/RELAY BOX CONNECTOR F (34P)**

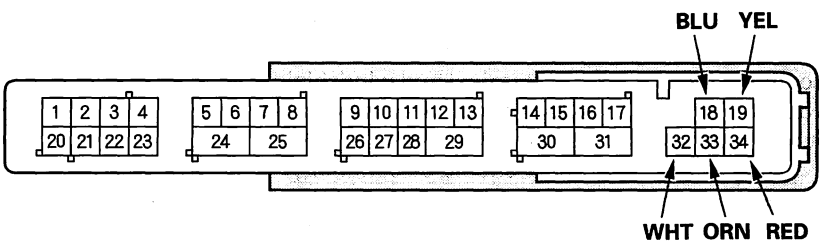


**UNDER-DASH FUSE/RELAY BOX CONNECTOR S (20P)**

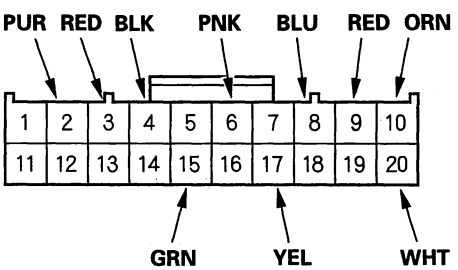


**UNDER-DASH FUSE/RELAY BOX CONNECTOR T (34P)**

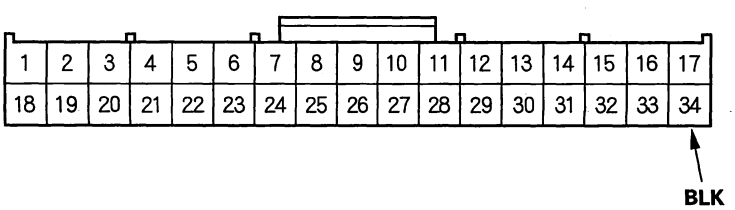


(cont'd)

Protected by AR



## MICU Input Test (cont'd)

3. Inspect the connector and socket terminals to be sure they are all making good contact.

   - If the terminals are bent, loose or corroded, repair them as necessary and recheck the system.
   - If the terminals look OK, go to step 4.

4. With the connectors still disconnected, make these input tests at the appropriate connector.

   - If any test indicates a problem, find and correct the cause, then recheck the system.
   - If all the input tests prove OK, go to step 5.

| Cavity | Wire | Test condition | Test: Desired result | Possible cause if result is not obtained |
|---|---|---|---|---|
| F18 | BLU | Under all conditions | Connect battery power to the F18 terminal:<br>The wiper motor should run at low speed. | • Poor ground (G451)<br>• Faulty windshield wiper motor<br>• An open in the wire |
| F19 | YEL | Under all conditions | Connect battery power to the F19 terminal:<br>The windshield wiper motor should run at high speed. | • Poor ground (G451)<br>• Faulty windshield wiper motor<br>• An open in the wire |
| F32 | WHT | Under all conditions (disconnect the windshield wiper motor 5P connector) | Check for continuity between the F32 terminal and windshield wiper motor 5P connector No. 4 terminal:<br>There should be continuity. | An open in the wire |
| F33<br>·<br>F34 | ORN<br>·<br>RED | Under all conditions | Connect battery power to the F33 terminal and the body ground to the F34 terminal:<br>The windshield/rear window washer motor should run. | • Faulty windshield/rear window washer motor<br>• An open in the wire |
| S2 | PUR | Under all conditions (disconnect the rear window wiper motor 4P connector) | Check for continuity between the S2 terminal and rear window wiper motor 5P connector No. 2 terminal:<br>There should be continuity. | An open in the wire |
| S3 | RED | ignition switch ON (II) | Connect body ground to the S3 terminal:<br>The rear window wiper motor should run. | • Poor ground (G602)<br>• Faulty rear window wiper motor<br>• Faulty rear window wiper relay<br>• An open in the wire |
| S6<br>·<br>S4 | PNK<br>·<br>BLK | Wiper/washer switch (intermittent dwell timer) turned | Check resistance between S6 and S4 terminals:<br>The resistance should vary between 0 and 1 kΩ. | • Faulty windshild wiper/ washer switch<br>• An open in the wire<br>• A short to ground in the wire |



BACK

Protected by AR



5. Reconnect the connectors to the under-dash fuse/relay box, and make these input tests at the connectors.

- If any test indicates a problem, find and correct the cause, then recheck the system.
- If all the input tests prove OK, the MICU must be faulty; replace the under-dash fuse/relay box.

| Cavity | Wire | Test condition | Test: Desired result | Possible cause if result is not obtained |
|---|---|---|---|---|
| E6 | BLK | Under all conditions | Check for voltage to ground: There should be less than 0.5 V. | • Poor ground (G601)<br>• An open in the wire |
| T34 | BLK | Under all conditions | Check for voltage to ground: There should be less than 0.5 V. | • Poor ground (G501)<br>• An open in the wire |
| S10 | ORN | Ignition switch ON (II), wiper/ washer switch (INT) ON | Check for voltage between S10 and S4 terminals, and S20 and S4 terminals: There should be less than 1 V. | • Faulty windshield wiper/washer switch<br>• An open in the wire |
| | | Ignition switch ON (II), wiper/ washer switch OFF | Check for voltage between S10 and S4 terminals, and S20 and S4 terminals: There should be 5 V or more. | • Faulty windshield wiper/washer switch<br>• A short to ground in the wire |
| S15 | GRN | Ignition switch ON (II), wiper/ washer switch (MIST) ON | Check for voltage between S15 and S4 terminals: There should be less than 1 V. | • Faulty windshield wiper/washer switch<br>• An open in the wire |
| | | Ignition switch ON (II), wiper/ washer switch (MIST) OFF | Check for voltage between S15 and S4 terminals: There should be 5 V or more. | • Faulty windshield wiper/washer switch<br>• A short to ground in the wire |
| S17 | YEL | Ignition switch ON (II), washer switch ON | Check for voltage between S17 and S4 terminals: There should be less than 1 V. | • Faulty windshield wiper/washer switch<br>• An open in the wire |
| | | Ignition switch ON (II), washer switch OFF | Check for voltage between S17 and S4 terminals: There should be 5 V or more. | • Faulty windshield wiper/washer switch<br>• A short to ground in the wire |
| S20 | WHT | Ignition switch ON (II), wiper/ washer switch (LOW) ON | Check for voltage between S20 and S4 terminals: There should be less than 1 V. | • Faulty windshield wiper/washer switch<br>• An open in the wire |
| | | Ignition switch ON (II), wiper/ washer switch OFF | Check for voltage between S20 and S4 terminals: There should be 5 V or more. | • Faulty windshield wiper/washer switch<br>• A short to ground in the wire |
| | WHT | Ignition switch ON (II), wiper/ washer switch (HIGH) ON | Check for voltage between S20 and S4 terminals: There should be less than 1 V. | • Faulty windshield wiper/washer switch<br>• An open in the wire |
| | | Ignition switch ON (II), wiper/ washer switch OFF | Check for voltage between S20 and S4 terminals: There should be 5 V or more. | • Faulty windshield wiper/washer switch<br>• A short to ground in the wire |
| S8 | BLU | Ignition switch ON (II), rear window wiper/washer switch RR WASH | Check for voltage between S9 and S4 terminals: There should be less than 1 V. | • Faulty rear window wiper/washer switch<br>• An open in the wire |
| | | Ignition switch ON (II), rear window wiper/washer switch OFF | Check for voltage between S9 and S4 terminals: There should be 5 V or more. | • Faulty rear window wiper/washer switch<br>• A short to ground in the wire |
| S9 | RED | Ignition switch ON (II), rear window wiper/washer switch RR WIPER | Check for voltage between S9 and S4 terminals: There should be less than 1 V. | • Faulty rear window wiper/washer switch<br>• An open in the wire |
| | | Ignition switch ON (II), rear window wiper/washer switch OFF | Check for voltage between S9 and S4 terminals: There should be 5 V or more. | • Faulty rear window wiper/washer switch<br>• A short to ground in the wire |

Protected by AR



## Wiper/Washer Switch Test/Replacement

1. Remove the steering column covers (see page 20-107).

2. Disconnect the windshield wiper switch 8P connector (A) from the wiper/washer switch (B).

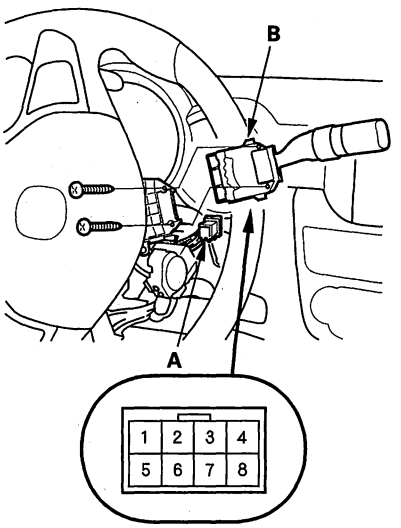


3. Remove the two screws, then pull out the wiper/washer switch.

4. Check for continuity between the terminals in each switch position according to the table.

**Windshield**

| Position \ Terminal | 1 | 2 | 3 | 4 | 5 | | 8 |
|---|---|---|---|---|---|---|---|
| OFF | | | | | | | |
| INT | | ○ | — | — | ○ | | |
| LO | | ○ | — | ○ | ○ | | |
| HI | | | | ○ | ○ | | |
| Mist ON | | | ○ | — | ○ | | |
| Washer ON | ○ | — | — | — | ○ | | |
| Intermittent dwell timer turned | | | | | ○ | ⁄⁄⁄ | ○ |

**Rear window**

| Position \ Terminal | 5 | 6 | 7 |
|---|---|---|---|
| Washer switch ON and wiper switch OFF | ○ — | ○ | |
| OFF | | | |
| ON | ○ — | — | ○ |
| Wiper and Washer Switch ON | ○ — | ○ — | ○ |

5. If the continuity is not as specified, replace the switch.



BACK

Protected by AR



# Wiper Motor Test

## Windshield

1. Remove the wiper arms (see page 22-247).

   NOTE: Carefully remove the wiper arms so that they do not touch the hood.

2. Remove the hood seal and cowl cover.

3. Disconnect the 5P connector (A) from the wiper motor (B).

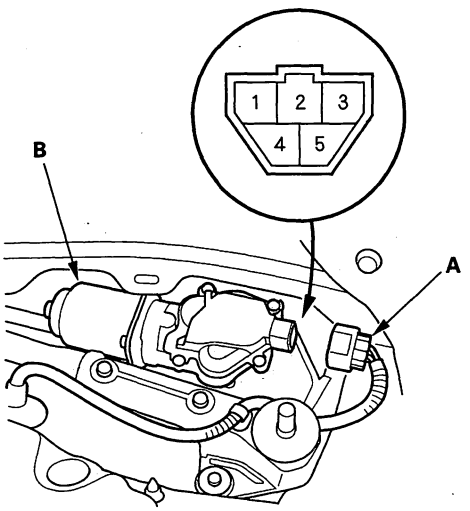


4. Test the motor by connecting battery power to the No. 3 terminal and ground to the No. 2 terminal of the wiper motor 5P connector. The motor should run at low speed. If the motor does not run or fails to run smoothly, replace the motor.

5. Test the motor by connecting battery power to the No. 5 terminal and ground to the No. 2 terminal of the wiper motor 5P connector. The motor should run at high speed. If the motor does not run or fails to run smoothly, replace the motor.

6. Connect an analog ohmmeter to the No. 4 and No. 2 terminals, and run the motor at low or high speed. The needle of the ohmmeter should pulse. If it does not, replace the motor.

## Rear Window

1. Open the tailgate, and remove the tailgate lower trim panel (see page 20-174).

2. Disconnect the 4P connector (A) from the motor (B).

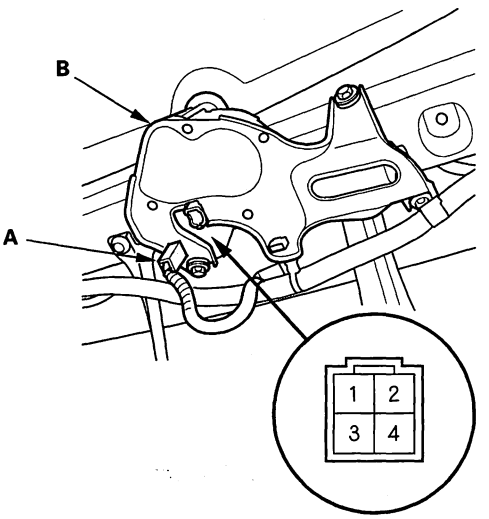


3. Test the motor by connecting battery power to the No. 1 terminal and ground to the No. 3 terminal of the 4P connector. The motor should run. If the motor does not run or fails to run smoothly, replace the motor.

4. Connect an analog ohmmeter to the No. 2 and No. 3 terminals, and run the motor at low or high speed. The needle of the ohmmeter should pulse.

5. If the motor test is not as specified, replace the rear window wiper motor.

Protected by AR



## Washer Motor Test

1. Remove the right inner fender (see page 20-176).

2. Disconnect the 2P connector (A) from the washer motor (B).

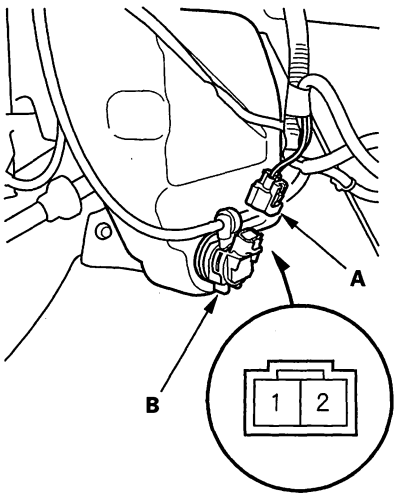


3. Test the motor by connecting battery power to the No. 2 (No. 1) terminal and ground the No. 1 (No. 2) terminal of the washer motor. The motor should run.
( ): Rear window washer direction.

   - If the motor does not run or fails to run smoothly, replace it.
   - If the motor runs smoothly, but little or no washer fluid is pumped, check for a disconnected or blocked washer hose, or a clogged washer motor outlet.

## Washer Fluid Level Switch Test

### Canada models

1. Remove the right inner fender (see page 20-176).

2. Disconnect the 2P connector (A) from the washer fluid level switch.

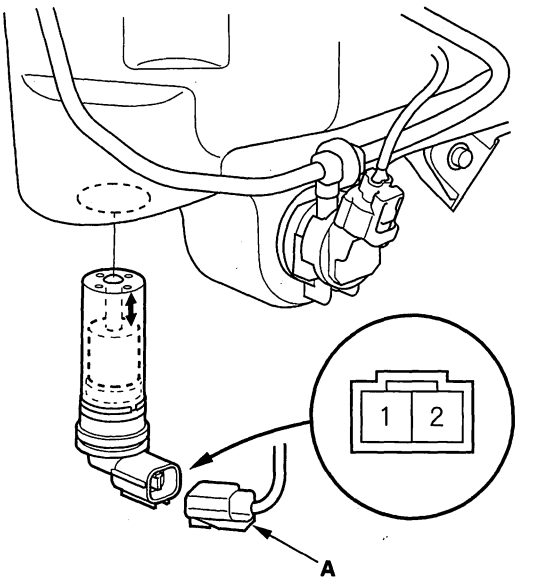


3. Remove the washer fluid level switch from the washer reservoir.

   NOTE: Fluid may flow out of the opening.

4. Check for continuity between the No. 1 and No. 2 terminals in each float position.

   - There should be continuity when the float is down.
   - There should be no continuity when the float is up.

5. If the continuity is not as specified, replace the switch.



BACK

Protected by AR



# Wiper Motor Replacement

## Removal

1. Open the hood. Remove the caps, nuts (A), and the windshield wiper arms (B).

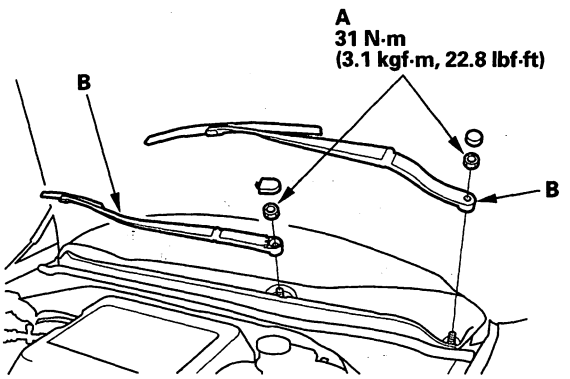


2. Remove the cowl covers (see page 20-163).

3. Disconnect the 5P connector (A) from the wiper motor.

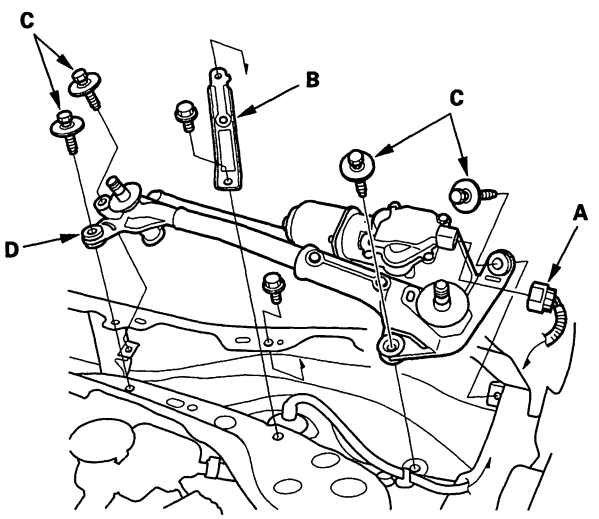


4. Remove the two bolts and the bracket (B).

5. Remove the four bolts (C) and the wiper linkage assembly (D).

6. Remove the nut (A) and the link (B) from the wiper motor (C).

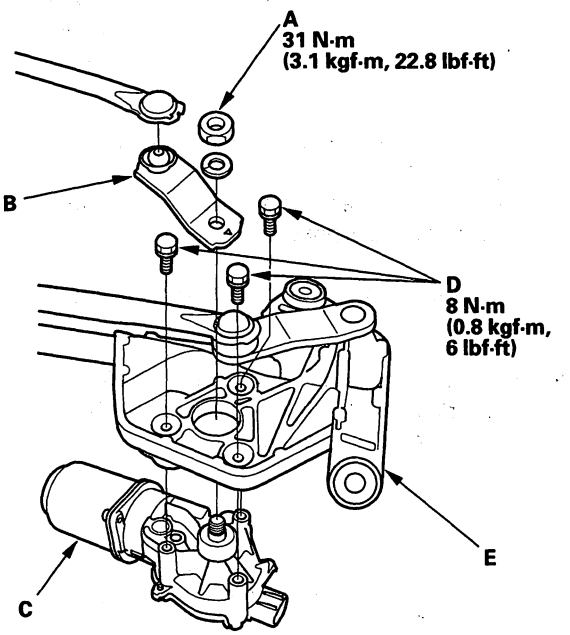


7. Remove the three bolts (D), and the wiper motor from the wiper linkage assembly (E).

(cont'd)

Protected by AR



## Wiper Motor Replacement (cont'd)

### Installation

1. Before installing the motor, plug it in, then turn the wiper/washer switch to (LO) or (HI) ON, then OFF to return the motor shaft to the park position.

   NOTE:
   - Does not use the wiper/washer switch (INT) position in this step.
   - If necessary, replace any damaged clips.
   - Apply multipurpose grease to the moving parts.

2. Install the wiper motor to the wiper linkage assembly.

3. Install the link to the wiper motor shaft, then align the mark (A) of the link and the mark (B) of the wiper linkage assembly.

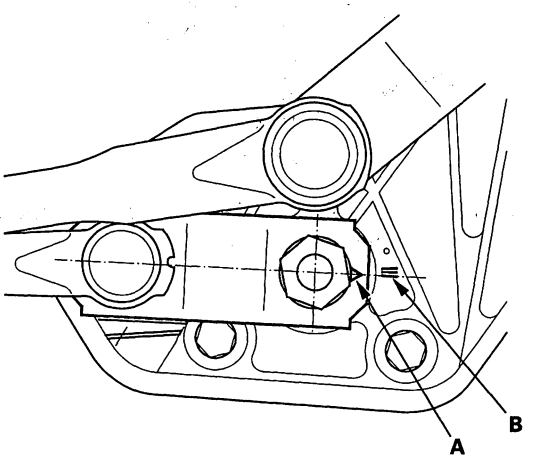


4. Before installing the wiper linkage assembly to the vehicle, align the mark (A) of the link and the mark (B) of the linkage assembly.

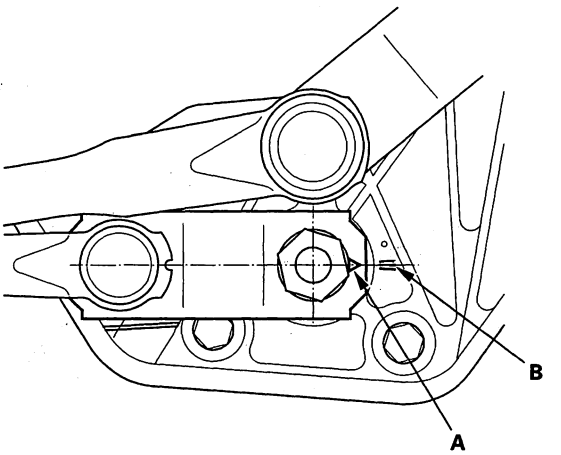


5. After installation, adjust the wiper arms (see page 22-251).



BACK

Protected by AR



## Rear Window Wiper Motor Replacement

1. Open the tailgate, and remove the tailgate lower trim panel (see page 20-174).

2. Remove the mounting nut (A), the wiper arm (B) and the special nut (C).

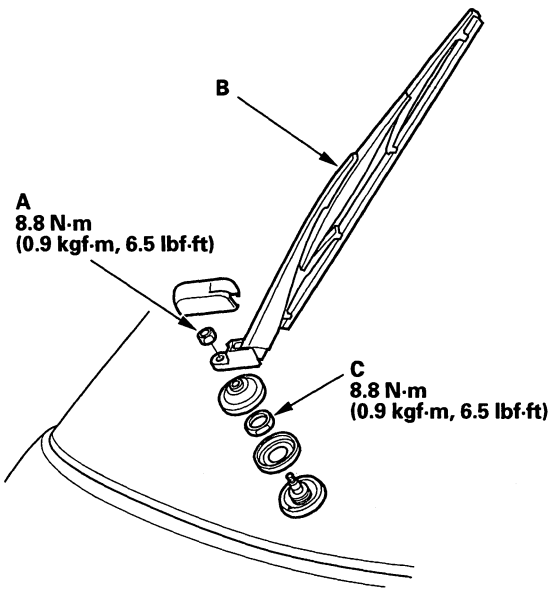


3. Disconnect the 4P connector (A) and remove the three mounting bolts (B), then remove the rear window wiper motor (C).

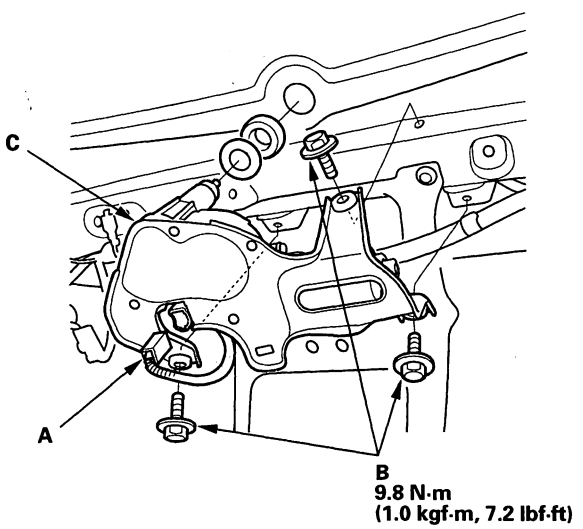


4. Install in the reverse order of removal.

## Washer Reservoir Replacement

1. Remove the right inner fender (see page 20-176).

2. Disconnect the 2P connector (A) from the washer motor (B).

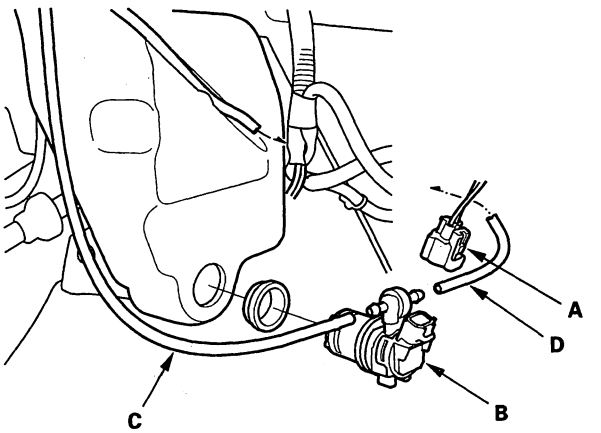


3. Disconnect the windshield washer tube (C) and the rear window washer tube (D).

4. Remove the clips and bolts, then remove the washer reservoir.

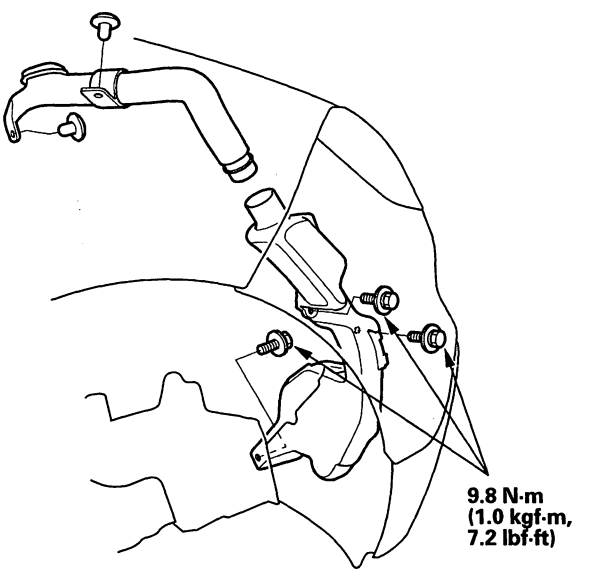


5. Install in the reverse order of removal.

Protected by AR



## Wiper Blade Replacement

### Windshield

1. Lift the wiper arm from the windshield.

   NOTE: Lift the driver's side first.

2. Press and hold the tab (A) and side the wiper blade (B) toward the tabs until it releases from the wiper arm (C).

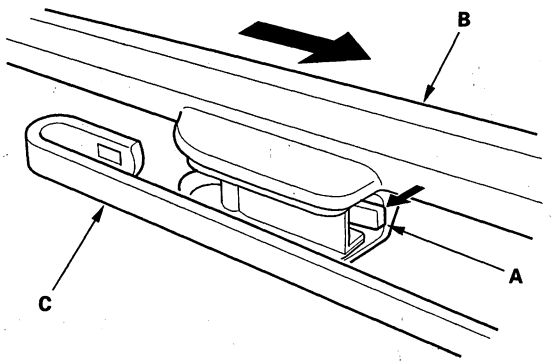


3. Pull the old rubber blade insert in the direction as shown, and remove it from the wiper blade.

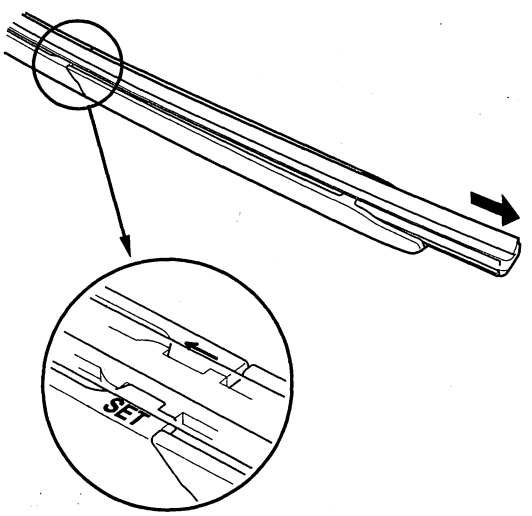


4. Install a new rubber blade insert in the reverse order of removal.

5. Install the wiper blades onto the windshield wiper arm in the reverse order of removal.

6. Test by turning on the wipers. If the blades slip, turn off the wipers and seat the attachments more firmly.

### Rear window

1. Lift the wiper arm from the rear window.

2. Turn the rear wiper blade (A), release the lock, and then remove the wiper blade from the rear wiper arm (B).

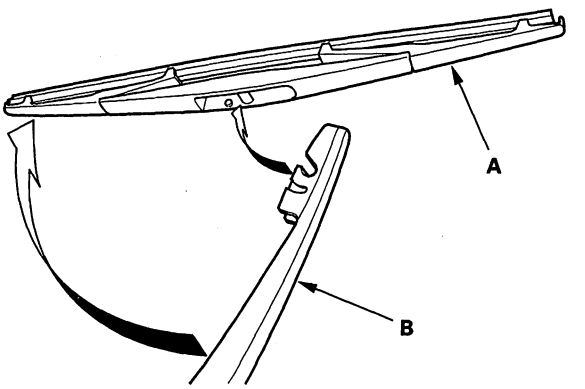


3. Raise the old rubber blade insert (A), and remove it from the wiper blade (B).

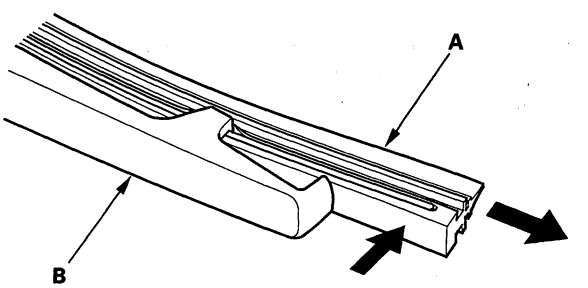


4. Install the new rubber blade insert and the wiper blade in the reverse order of removal.

   NOTE: After installation, confirm that the wiper arm works smoothly.



BACK

Protected by AR



# Wiper Arm/Nozzle Adjustment

## FRONT

### Wiper arms park position

1. When the wiper arms stop at the park position, confirm that they are at the standard position.

   a: Position at about 1.2 in. (31 mm) from the top of cowl cover (A)
   b: Position at about 1.4 in. (35 mm) from the top of cowl cover (A)

### Washer nozzle position

2. When you turn on the washers, confirm 50 % or more of the washer fluid lands within the spray area. If the spray area is not within the standard positions, adjust the nozzles.

   c: Position at about 15.2 in. (385 mm) from the top of the black ceramic area (B) at the lower windshield
   d: Position at about 6.8 in. (173 mm) from the top of the black ceramic area (B) at the lower windshield
   e: Position at about 7.0 in. (178 mm) from the top of the black ceramic area (B) at the lower windshield
   f: Position at about 15.4 in. (392 mm) from the top of the black ceramic area (B) at the lower windshield
   g: Position at about 4.8 in. (121 mm) from the windshield center line (C)
   h: Position at about 4.7 in. (119 mm) from the windshield center line (C)
   i: Position at about 19.6 in. (497 mm) from the windshield center line (C)
   j: Position at about 19.7 in. (500 mm) from the windshield center line (C)

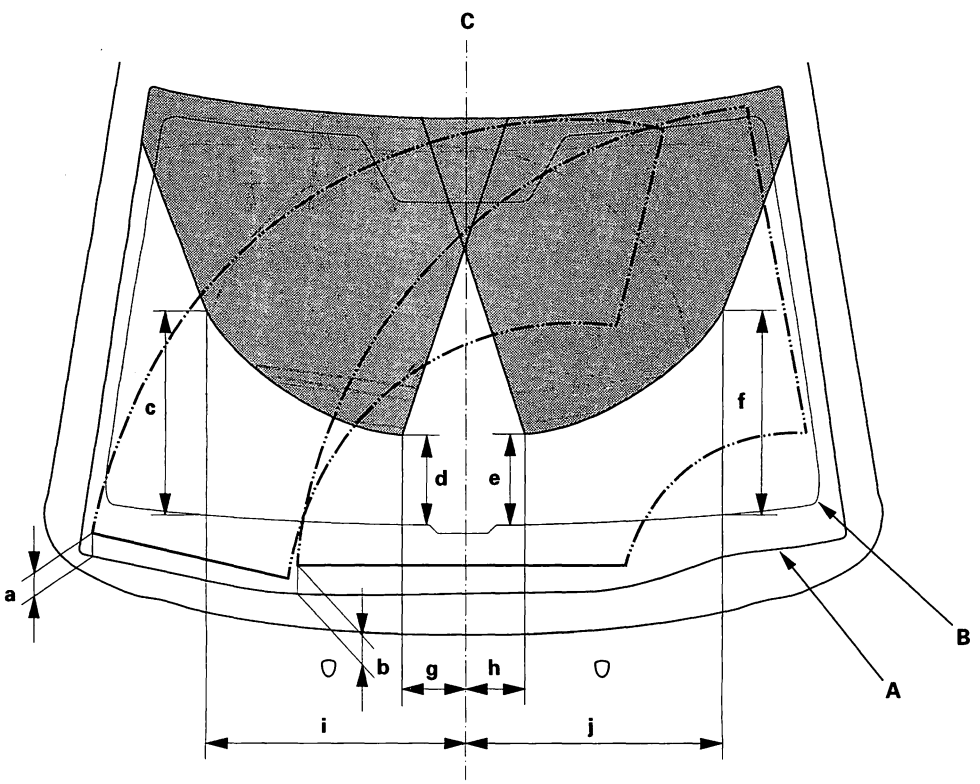


(cont'd)

Protected by AR



## Wiper Arm/Nozzle Adjustment (cont'd)

### REAR

**Wiper arm park position**

1. When the wiper arm stops at the park position, confirm that it is at the standard position.

   a: Position at about 0.2 in. (6 mm) from the black ceramic area (A)

**Washer nozzle position**

2. When you turn on the washers, confirm 50 % or more of the washer fluid lands within the spray area. If the spray area is not within the standard positions, adjust the nozzles.

   b: Position at about 8.9 in. (226 mm) from the rear window center line (B)
   c: Position at about 8.2 in. (209 mm) from the rear window center line (B)
   d: Position at about 7.3 in. (186 mm) from the rear window center line (B)
   e: Position at about 1.6 in. (40 mm) from the top of the black ceramic area (A) at the lower rear window
   f: Position at about 2.1 in. (53 mm) from the top of the black ceramic area (A) at the lower rear window

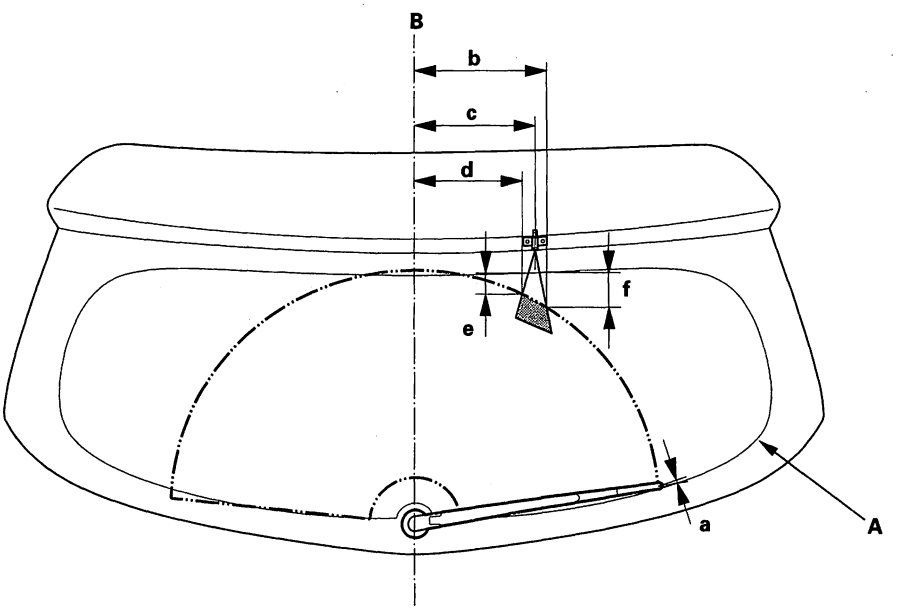




BACK

Protected by AR



## Washer Tube Replacement

1. Remove the right inner fender (see page 20-176).
2. Remove the washer nozzles and clips, then remove the tubes.

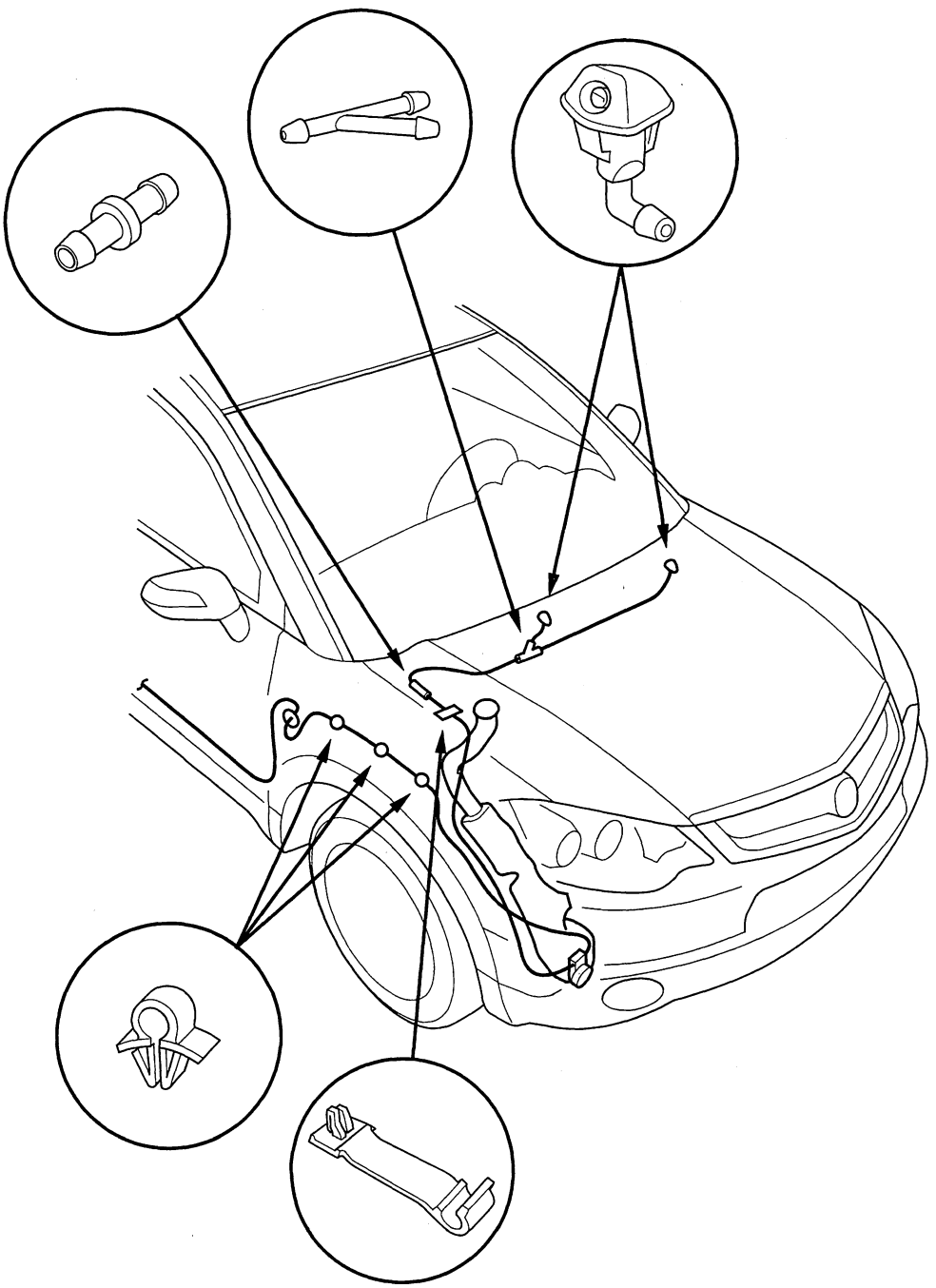

(cont'd)

Protected by AR



## Washer Tube Replacement (cont'd)

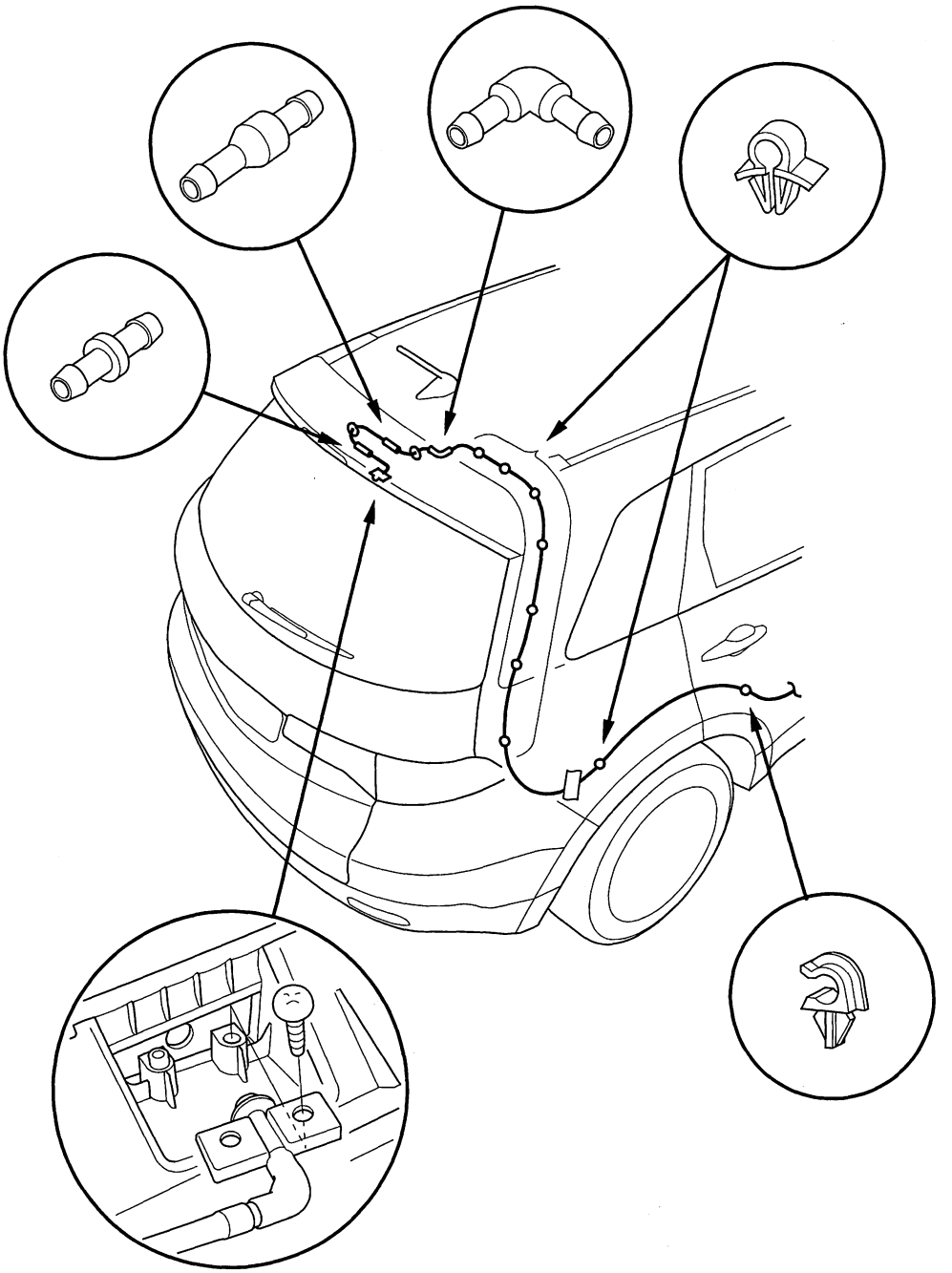

3. Install in the reverse order of removal. Take care not to pinch the washer tubes. Check the washer operation.



BACK

Protected by AR



## Component Location Index

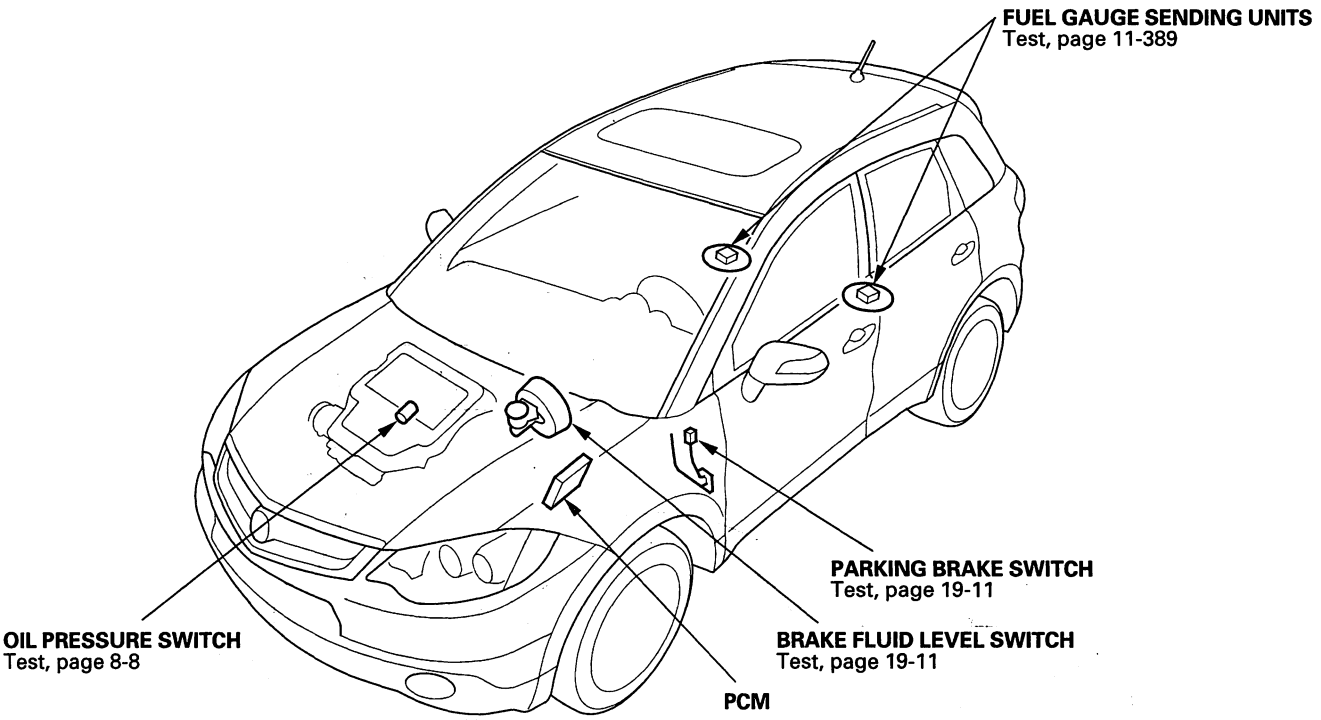


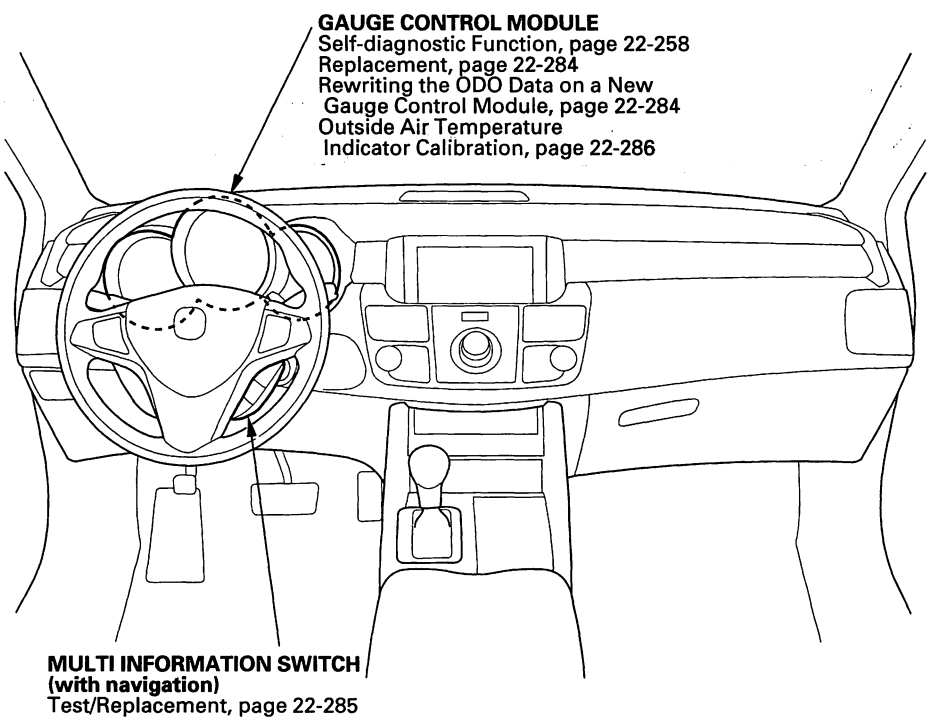


(cont'd)

Protected by AR



## Component Location Index (cont'd)

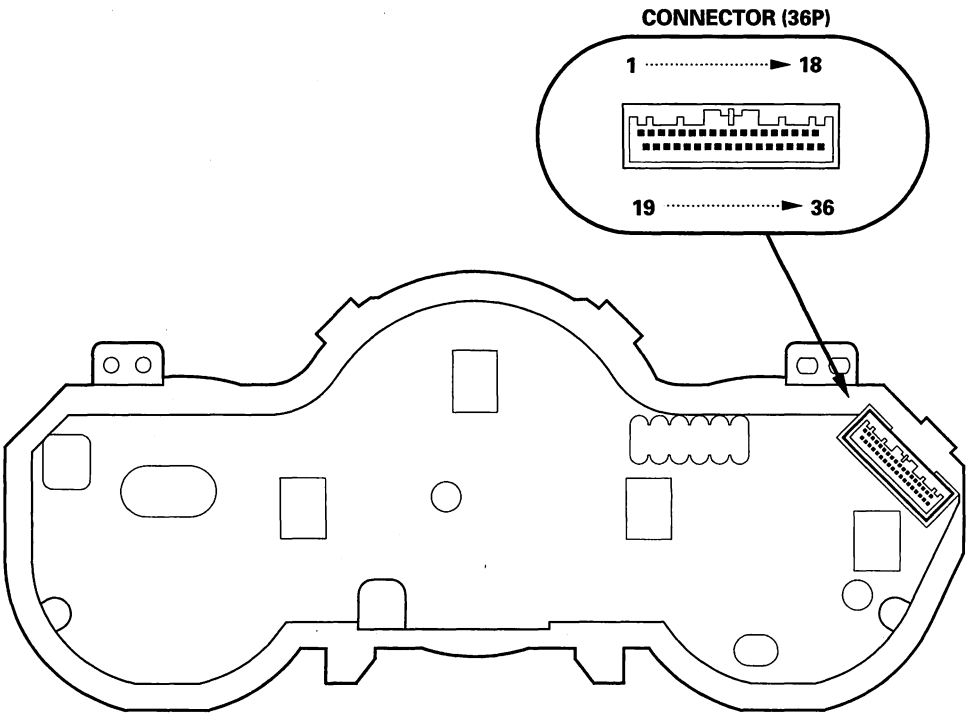




BACK

Protected by AR



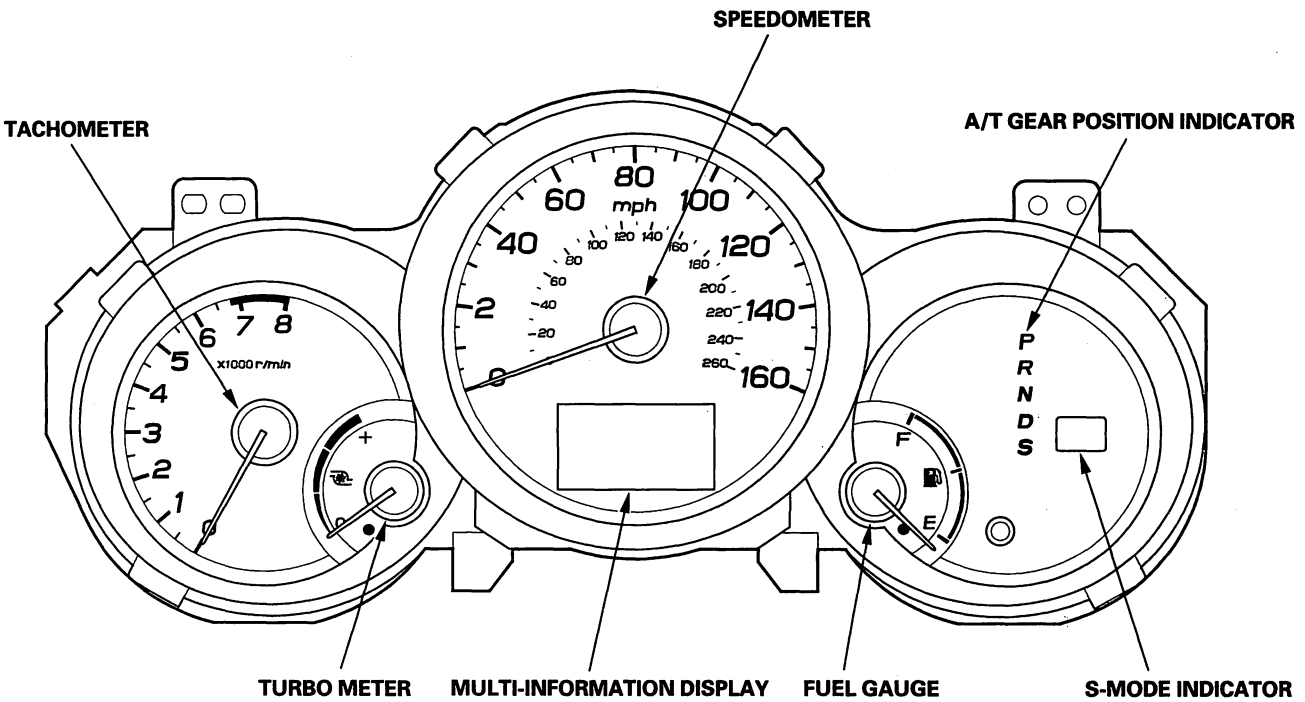

Protected by AR



## Self-diagnostic Function

Before troubleshooting the gauge system, refer to multiplex integrated control system B-CAN System Diagnosis Test Mode A (see page 22-88).

The gauge control module has a self-diagnostic function which consists of the following checks:

- The beeper drive circuit check.
- The indicator drive circuit check.
- The switch input test.
- The LCD segments check.
- The gauges drive circuit check (Tachometer, Fuel gauge, Speedometer, Turbo meter
- The communication line check (of the body-controller area network (B-CAN) communication line and the fast-controller area network (F-CAN) communication line between the gauges).

NOTE:
Indicators are also controlled via the communication line.

### Entering the self-diagnostic function with the HDS

Using the HDS, select Body Electrical, Gauges, then Function Test and do the self-diagnostic Function.

### Entering the self-diagnostic function (manual method)

Before doing the self-diagnostic function, check the No. 10 (7.5 A) fuse in the under-dash fuse/relay box and the No. 23 (10 A) fuse in the under-hood fuse/relay box.

1. Push and hold the SEL/RESET switch button.
2. Turn the headlights ON.
3. Turn the ignition switch ON (II).
4. Within 5 sec., turn the headlights OFF, then ON and OFF again.
5. Within 5 sec., release the SEL/RESET switch button, and then push and release the button three times repeatedly.

NOTE:
- While in the self-diagnostic mode, the dash lights brightness controller operates normally.
- While in the self-diagnostic mode, the SEL/RESET button is used to start the Beeper Drive Circuit Test and the Gauge Drive Circuit Check.
- If the vehicle speed exceeds 1.2 mph (2 km/h) or the ignition switch is turned OFF, the self-diagnostic mode ends.

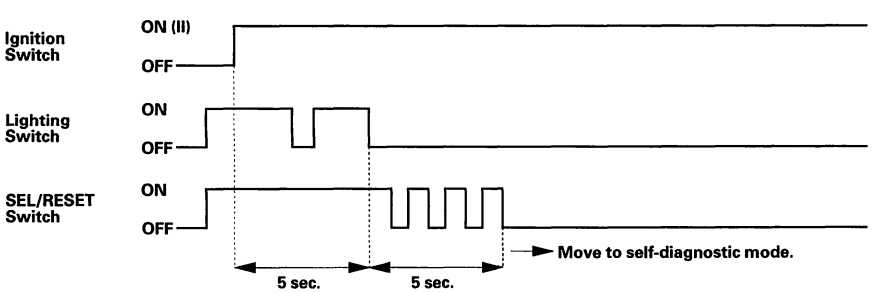




BACK

Protected by AR



## The Indicator Drive Circuit Check

When entering the self-diagnostic mode, the following indicators blink:
A/T gear position indicator, A/T temperature indicator, ABS indicator, brake system indicator, charging system indicator, cruise control indicator, cruise main indicator, DRL indicator (without navigation), electric vacuum pump system indicator, fog light indicator, high beam indicator, immobilizer indicator, lights-on indicator, low engine oil pressure indicator, low fuel indicator, low tire pressure indicator, malfunction indicator lamp (MIL), message indicator (with navigation), seat belt indicator, security indicator, SH-AWD indicator, side airbag cutoff indicator, SRS indicator, TPMS indicator (without navigation), VSA activation indicator, VSA indicator and washer fluid level indicator (Canada models).

## Switch Input Check

At the initial stage of the self-diagnostic function, the beeper sounds intermittently. The beeper sounds continuously when any of the following switch inputs are switched from OFF to ON:
Cruise control master, SET, RESUME, CANCEL switches, multi information switch, SEL/RESET, NEXT, PREVIOUS switches (+), (−) switch, parking brake switch, and VSA OFF switch.

## The Beeper Drive Circuit Check

When entering the self-diagnostic mode, the beeper sounds five times.

## The LCD Segment Check

With navigation: When entering the self-diagnostic mode, all the segments blink five times.
Without navigation: When entering the self-diagnostic mode, the word "CHECKING NOW" shows on the LCD.

## The Gauge Drive Circuit Check

When entering the self-diagnostic mode, the speedometer, the tachometer, the fuel gauge and the turbo meter needle sweeps from the minimum position to maximum position, then returns to the minimum position.

NOTE:
After the beeper stops sounding and the gauge needle returns to the minimum position, pushing the SEL/RESET switch starts the Beeper Drive Circuit Check (one beep) and the Gauge Drive Circuit Check again.
The check cannot be started again until the gauge needle returns to the minimum position.

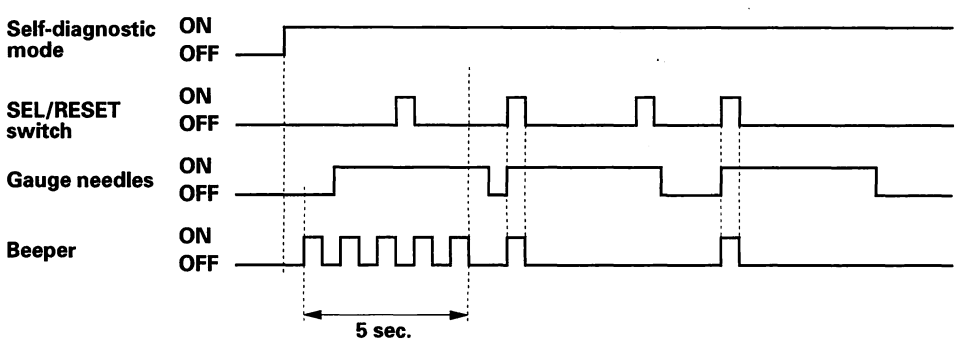


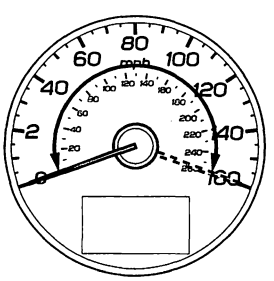


The needle sweeps from the minimum position to the maximum position, then return to the minimum position.

If the needle fails to sweep, or the beeper does not sound, replace the gauge control module.

(cont'd)

Protected by AR



## Self-diagnostic Function (cont'd)

### The Communication Line Check

#### Without navigation

While in the self-diagnostic mode, the Communication Line Check starts after the LCD Segments Check.
If all segments come on, the communication line is OK. If faulty, the word "Error" will be indicated on the odometer display followed by a number(s).

**Error Code List**

| Error code | Type of communication line(s) error |
|---|---|
| Error 1 | F-CAN communication |
| Error 2 | B-CAN communication |
| Error 3 | F-CAN and B-CAN communication |

**Example Indication**

Normal (all segments come on.):

Faulty (Error 1):

- If the word "Error 1" is indicated, there is a malfunction in the communication line between the F-CAN and the gauge control module. The B-CAN is OK at this time. Check for DTCs in the PCM and troubleshoot any DTCs found. If no DTCs are found, go to B-CAN System Diagnosis Test Mode A (see page 22-88).
- If the word "Error 2" is indicated, there is a malfunction in the communication line between the B-CAN and the gauge control module. The F-CAN line is OK at this time. Go to B-CAN System Diagnosis Test Mode A (see page 22-88).
- If the word "Error 3" is indicated, there is a malfunction in the communication line between the gauge control module, the F-CAN, and the B-CAN. Check the DTCs in the PCM and troubleshoot any DTCs found. If no DTCs are found, go to B-CAN System Diagnosis Test Mode A (see page 22-88).

#### With navigation

While in the self-diagnostic mode, the Communication Line Check starts after the LCD Segment Check.

If the communication line is OK, the word "OK" will be indicated on multi-information display (MID). If there is a communication line error, the word "NG" will be indicated on the MID.



BACK

Protected by AR



**Indication pattern**

There is malfunction in the communication line between the F-CAN and the gauge control module. The B-CAN is OK at this time. Check for DTCs in the PCM and troubleshoot any DTCs found. If no DTCs are found, go to B-CAN System Diagnosis Test Mode A (see page 22-88).

COMMUNICATION CHECK
F-CAN·····NG
B-CAN·····OK

There is malfunction in the communication line between the B-CAN and the gauge control module. The B-CAN line is OK at this time. Go to B-CAN System Diagnosis Test Mode A (see page 22-88).

COMMUNICATION CHECK
F-CAN·····OK
B-CAN·····NG

There is malfunction in the communication line between the gauge control module, the F-CAN, and the B-CAN. Check for DTCs in the PCM and troubleshoot any DTCs found. If no DTCs are found, go to B-CAN System Diagnosis Test Mode A (see page 22-88).

COMMUNICATION CHECK
F-CAN·····NG
B-CAN·····NG

## Ending the self-diagnostic function

Turn the ignition switch OFF.

NOTE: If the vehicle speed exceeds 1.2 mph (2 km/h), the self-diagnostic function ends.

Protected by AR

# Gauges

## Circuit Diagram

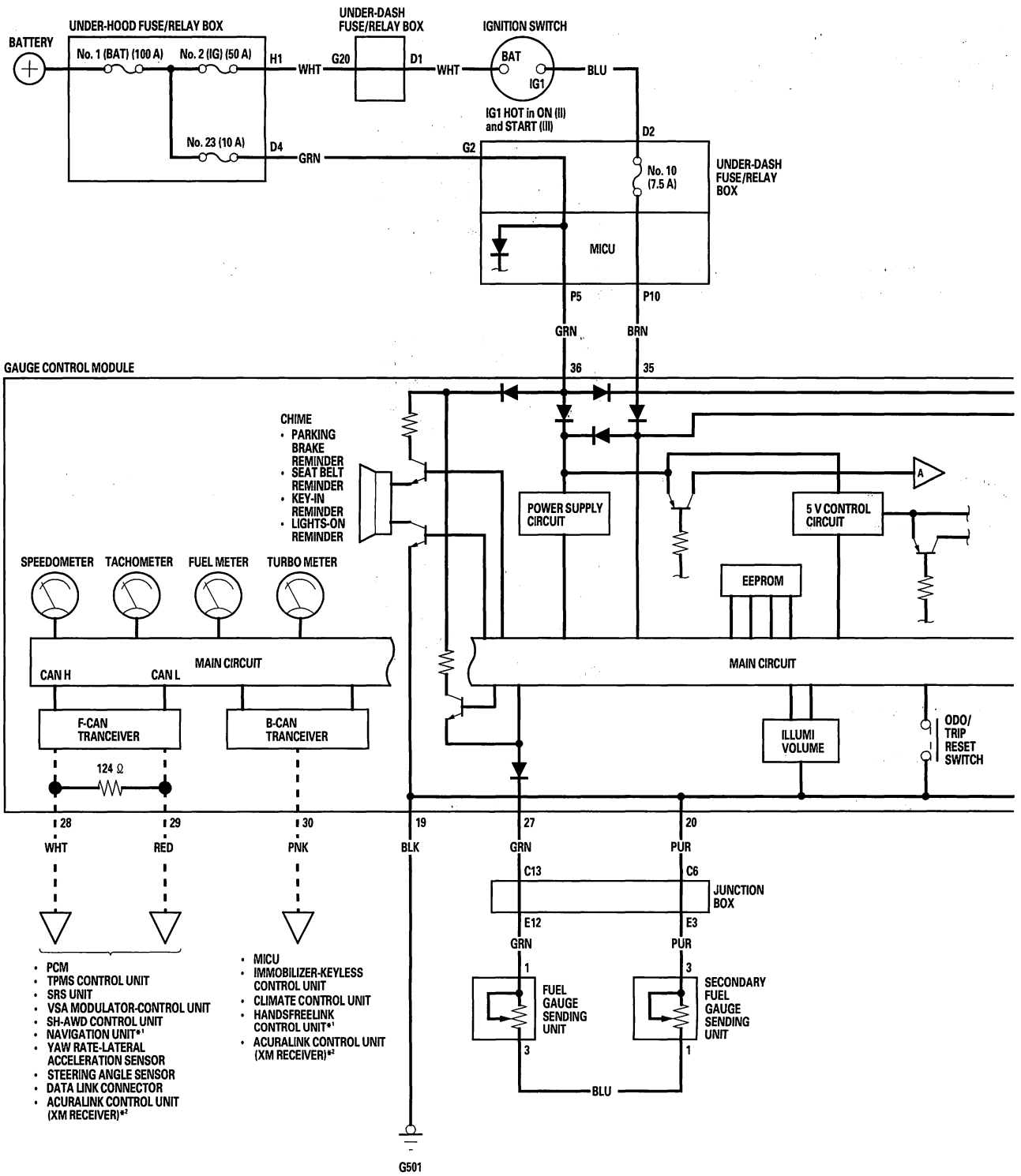




BACK

Protected by AR



*1 : With navigation
*2 : USA models with navigation
- - - - - : CAN line

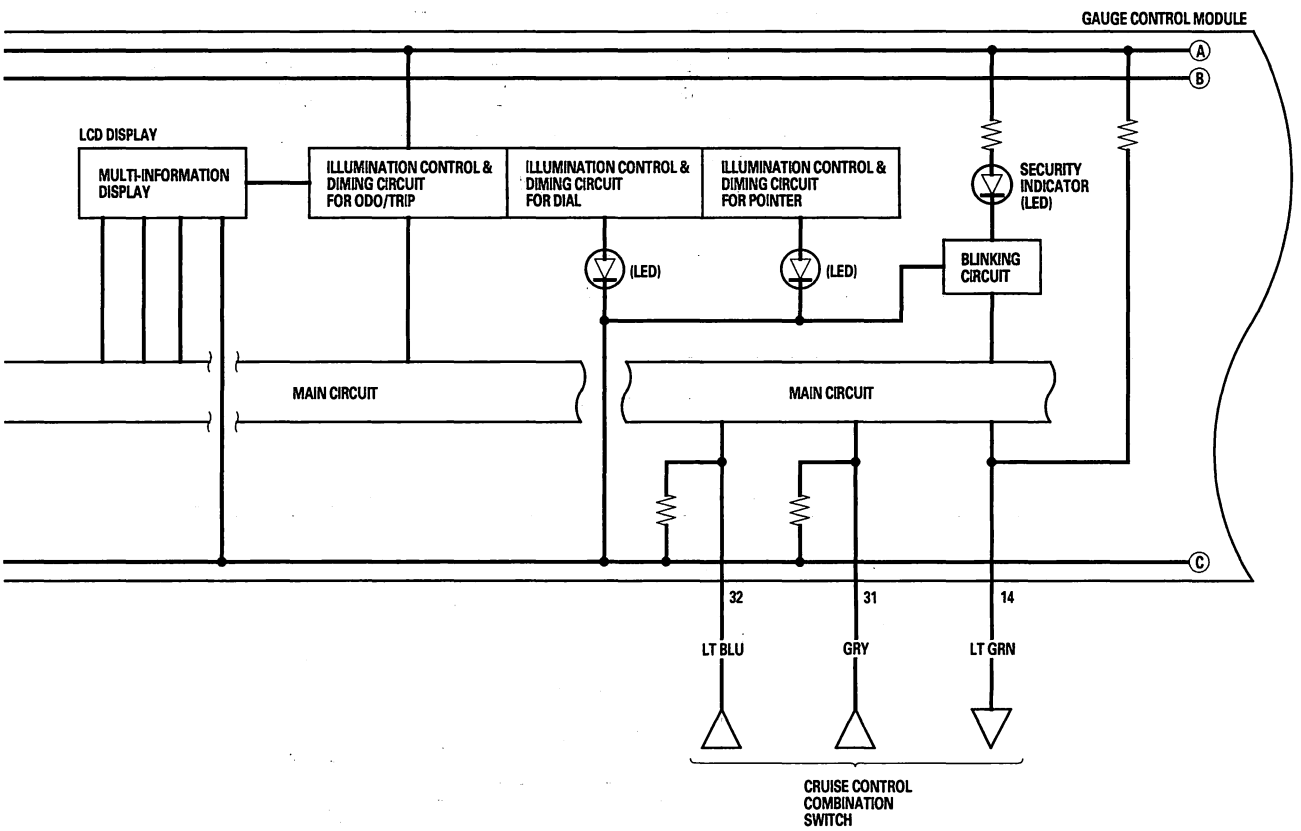


(cont'd)

Protected by AR



## Circuit Diagram (cont'd)

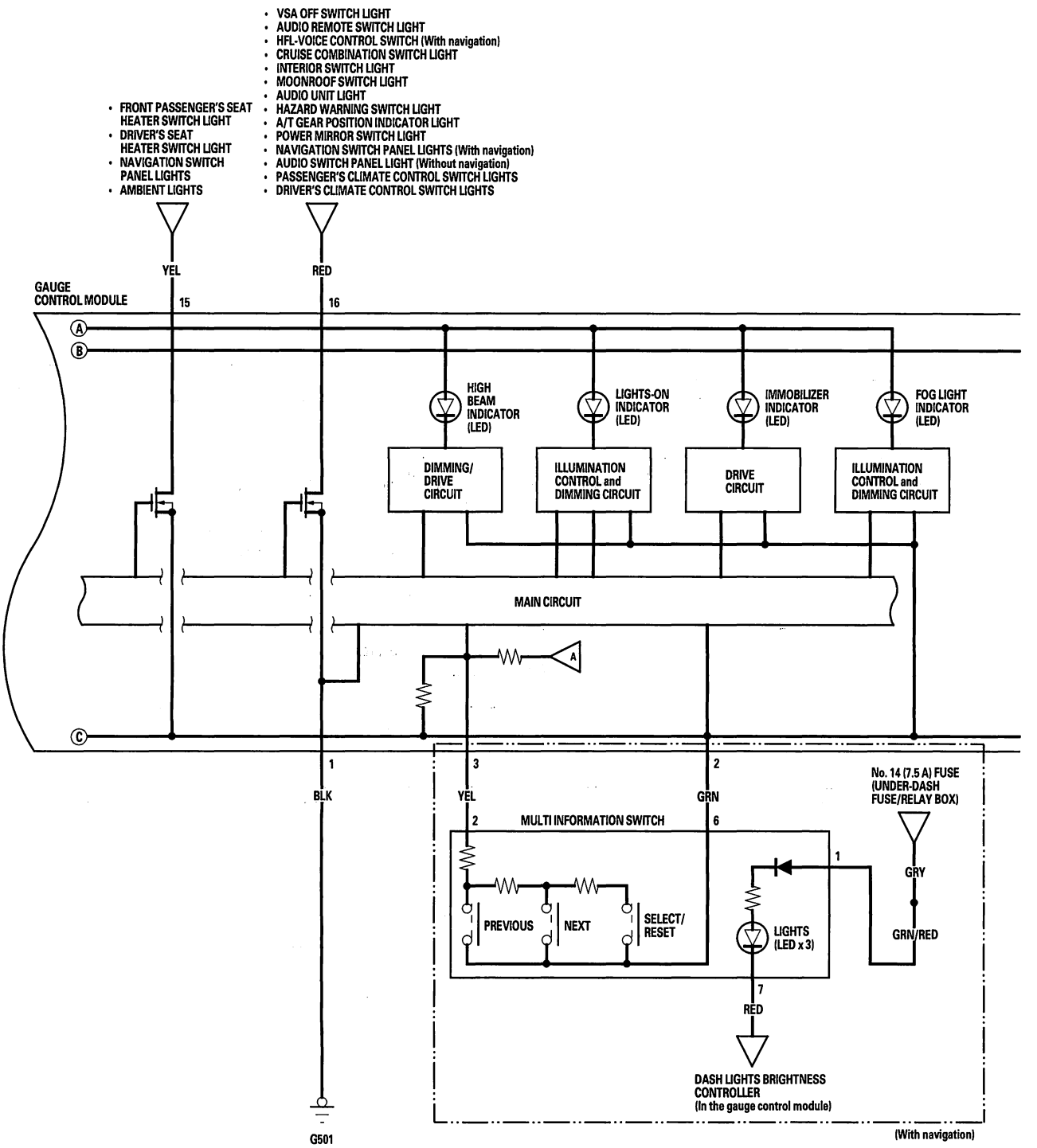




BACK

Protected by AR



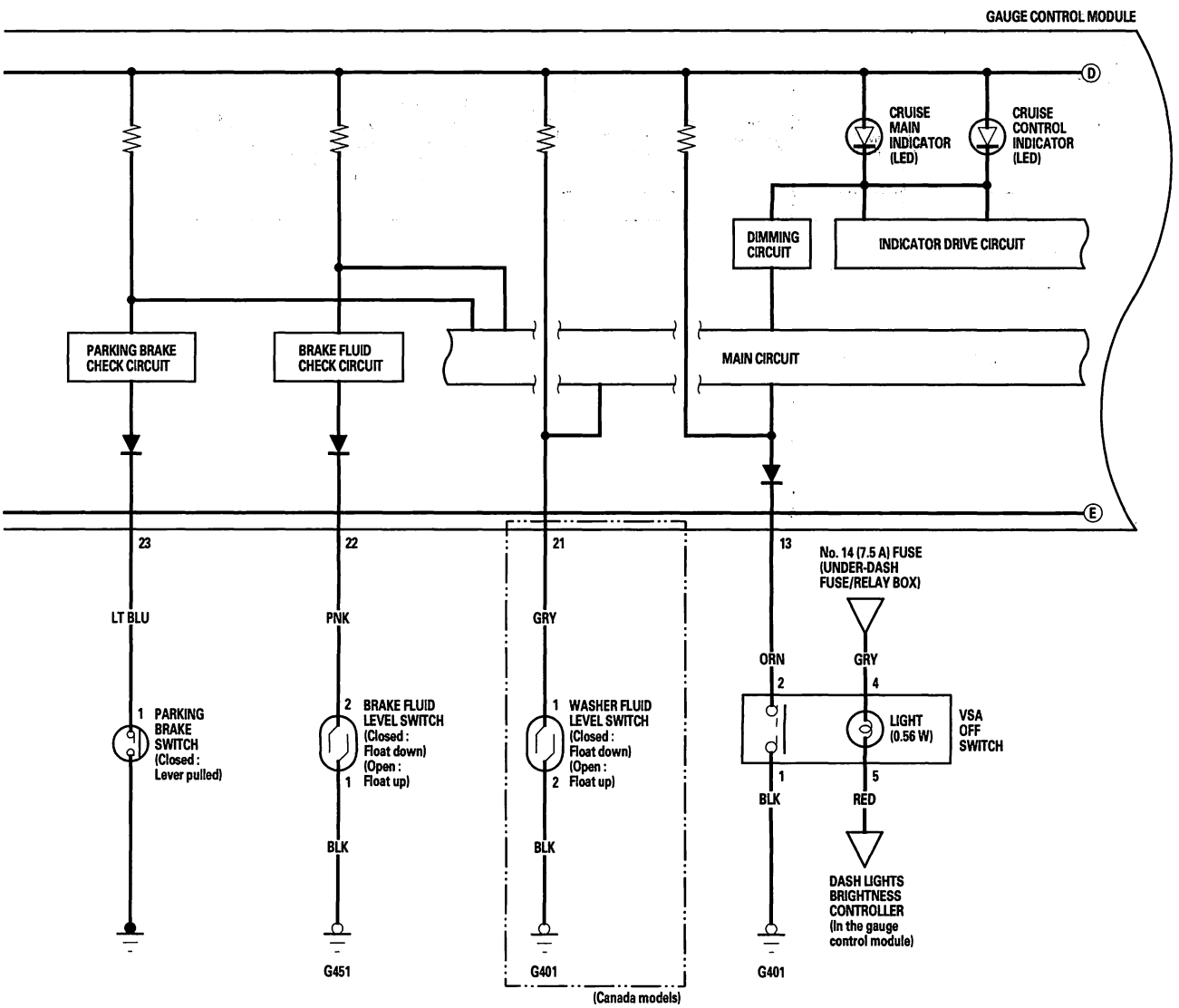


(cont'd)

Protected by AR



## Circuit Diagram (cont'd)

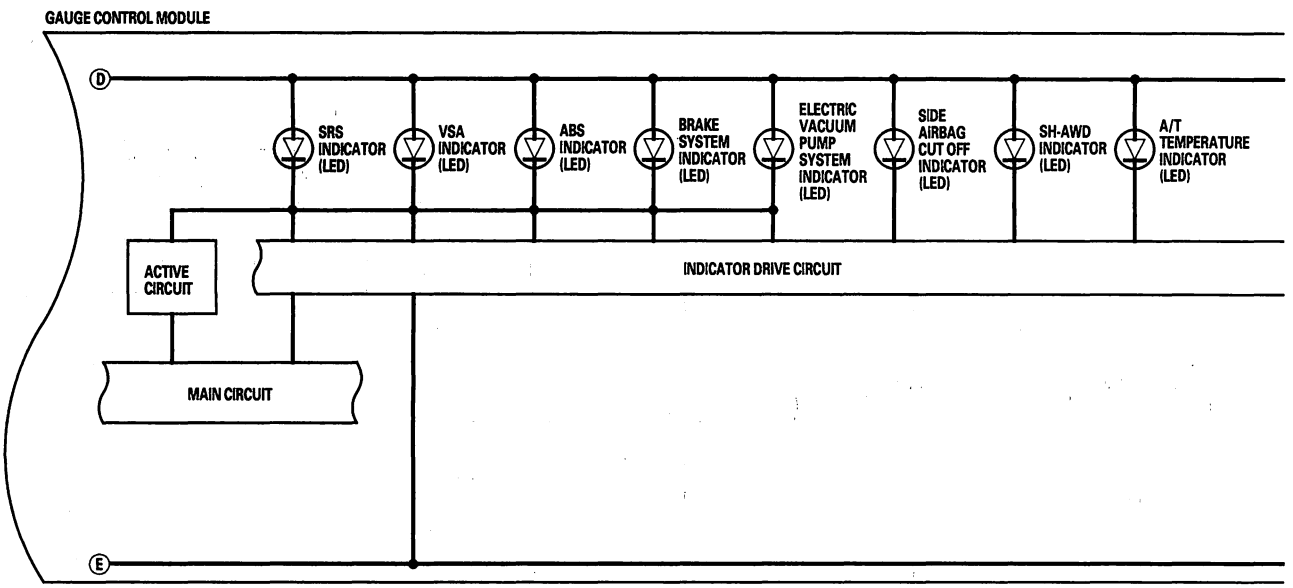




BACK

Protected by AR



*1 : With navigation

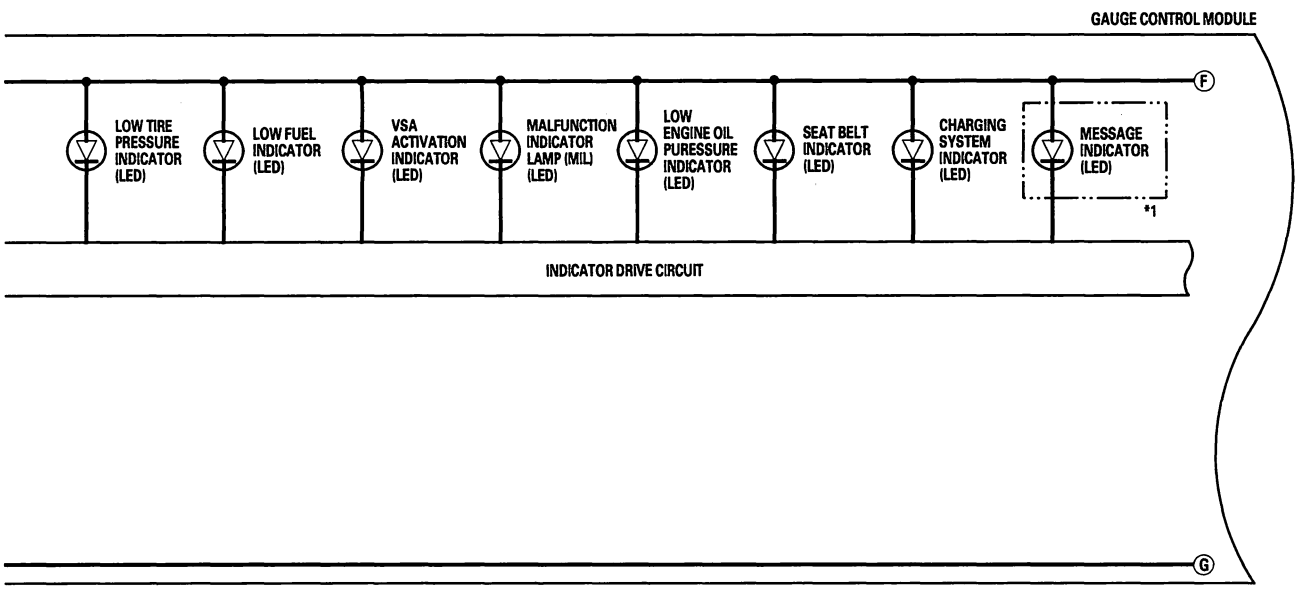


(cont'd)

Protected by AR



## Circuit Diagram (cont'd)

*1 : Without navigation
*2 : Canada models without navigation

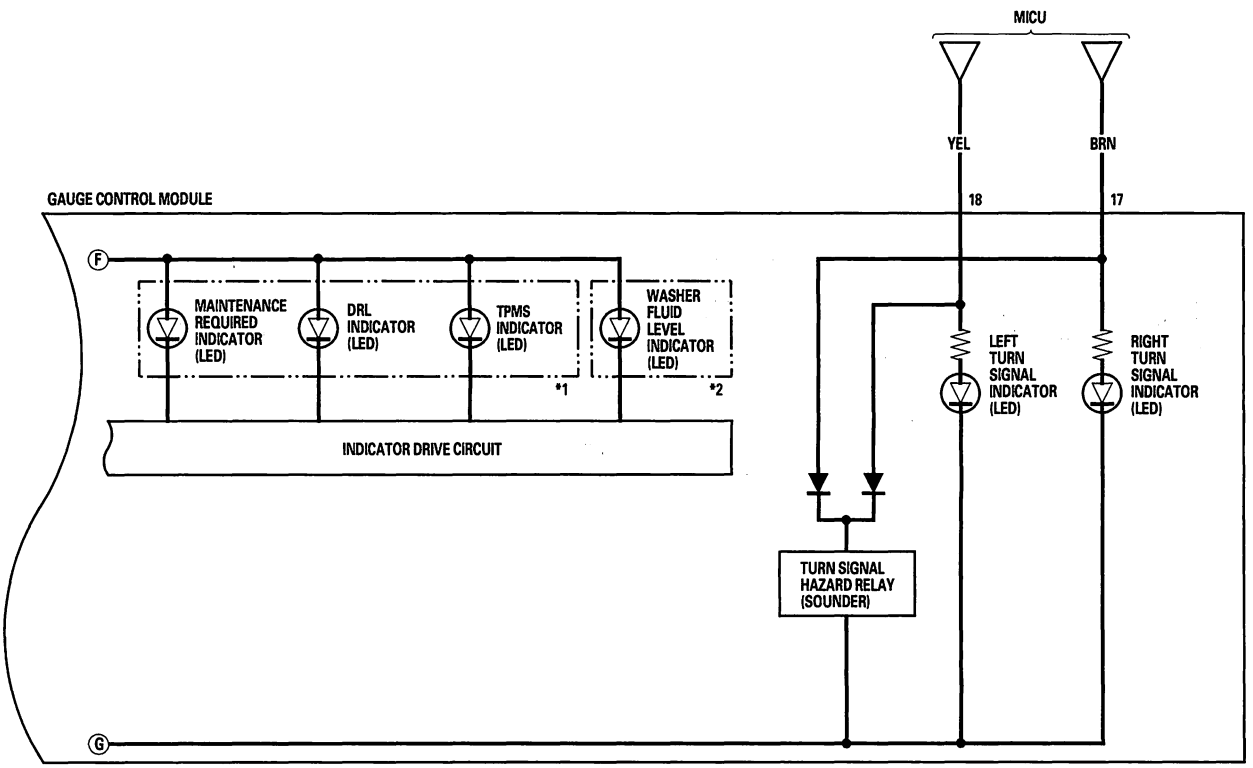




BACK

Protected by AR



## DTC Troubleshooting

### DTC B1152: Gauge Control Module Internal Error (EEPROM) Error

NOTE: If you are troubleshooting multiple DTCs, be sure to follow the instructions in B-CAN System Diagnosis Test Mode A (see page 22-88).

1. Clear the DTCs with the HDS.
2. Turn the ignition switch OFF, and then back ON (II).
3. Wait for 6 seconds or more.
4. Check for DTCs with the HDS.

   *Is DTC B1152 indicated?*

   **YES**—Replace the gauge control module. ■

   **NO**—Intermittent failure, the system is OK at this time. Check for loose or poor connections. If the connections are good, check the battery condition (see page 22-63), and the charging system. ■

### DTC B1155: Gauge Control Module Lost Communication with the MICU (Headlight Switch Message)

NOTE: If you are troubleshooting multiple DTCs, be sure to follow the instructions in B-CAN System Diagnosis Test Mode A (see page 22-88).

1. Clear the DTCs with the HDS.
2. Turn the ignition switch OFF, and then back ON (II).
3. Wait for 6 seconds or more.
4. Check for DTCs with the HDS.

   *Is DTC B1155 indicated?*

   **YES**—Go to step 5.

   **NO**—Intermittent failure. The gauge control module is OK at this time. Check for loose or poor connections. If the connections are good, check the battery condition (see page 22-63), and the charging system. ■

5. Check for DTCs with the HDS.

   *Are DTCs B1155 and B1905 indicated at the same time?*

   **YES**—Faulty MICU; replace the under-dash fuse/relay box. ■

   **NO**—Replace the gauge control module. ■

Protected by AR



## DTC Troubleshooting (cont'd)

### **DTC B1156:** Gauge Control Module Lost Communication with the MICU (Wiper Switch Message)

NOTE: If you are troubleshooting multiple DTCs, be sure to follow the instructions in B-CAN System Diagnosis Test Mode A (see page 22-88).

1. Clear the DTCs with the HDS.
2. Turn the ignition switch OFF, and then back ON (II).
3. Wait for 6 seconds or more.
4. Check for DTCs with the HDS.

   *Is DTC B1156 indicated?*

   **YES**—Go to step 5.

   **NO**—Intermittent failure. The gauge control module is OK at this time. Check for loose or poor connections. If the connections are good, check the battery condition (see page 22-63), and the charging system.■

5. Check for DTCs with the HDS.

   *Are DTCs B1156 and B1905 indicated at the same time?*

   **YES**—Faulty MICU; replace the under-dash fuse/relay box.■

   **NO**—Replace the gauge control module.■

### **DTC B1157:** Gauge Control Module Lost Communication with the MICU (MICU Message)

NOTE: If you are troubleshooting multiple DTCs, be sure to follow the instructions in B-CAN System Diagnosis Test Mode A (see page 22-88).

1. Clear the DTCs with the HDS.
2. Turn the ignition switch OFF, and then back ON (II).
3. Wait for 6 seconds or more.
4. Check for DTCs with the HDS.

   *Is DTC B1157 indicated?*

   **YES**—Go to step 5.

   **NO**—Intermittent failure. The gauge control module is OK at this time. Check for loose or poor connections. If the connections are good, check the battery condition (see page 22-63), and the charging system.■

5. Check for DTCs with the HDS.

   *Are DTCs B1157 and B1905 indicated at the same time?*

   **YES**—Faulty MICU; replace the under-dash fuse/relay box.■

   **NO**—Replace the gauge control module.■



BACK

Protected by AR



## DTC B1159: Gauge Control Module Lost Communication with the MICU (DOORSW Message)

NOTE: If you are troubleshooting multiple DTCs, be sure to follow the instructions in B-CAN System Diagnosis Test Mode A (see page 22-88).

1. Clear the DTCs with the HDS.
2. Turn the ignition switch OFF, and then back ON (II).
3. Wait for 6 seconds or more.
4. Check for DTCs with the HDS.

   *Is DTC B1159 indicated?*

   **YES**—Go to step 5.

   **NO**—Intermittent failure. The gauge control module is OK at this time. Check for loose or poor connections. If the connections are good, check the battery condition (see page 22-63), and the charging system. ■

5. Check for DTCs with the HDS.

   *Are DTCs B1159 and B1905 indicated at the same time?*

   **YES**—Faulty MICU; replace the under-dash fuse/relay box. ■

   **NO**—Replace the gauge control module. ■

## DTC B1160: Gauge Control Module Lost Communication with the MICU (DRLOCKSW Message)

NOTE: If you are troubleshooting multiple DTCs, be sure to follow the instructions in B-CAN System Diagnosis Test Mode A (see page 22-88).

1. Clear the DTCs with the HDS.
2. Turn the ignition switch OFF, and then back ON (II).
3. Wait for 6 seconds or more.
4. Check for DTCs with the HDS.

   *Is DTC B1160 indicated?*

   **YES**—Go to step 5.

   **NO**—Intermittent failure. The gauge control module is OK at this time. Check for loose or poor connections. If the connections are good, check the battery condition (see page 22-63), and the charging system. ■

5. Check for DTCs with the HDS.

   *Are DTCs B1160 and B1905 indicated at the same time?*

   **YES**—Faulty MICU; replace the under-dash fuse/relay box. ■

   **NO**—Replace the gauge control module. ■

Protected by AR



## DTC Troubleshooting (cont'd)

**DTC B1168:** Gauge Control Module Lost Communication with the PCM (Engine Messages)

**DTC B1169:** Gauge Control Module Lost Communication with the PCM (A/T Messages)

NOTE: If you are troubleshooting multiple DTCs, be sure to follow the instructions in B-CAN System Diagnosis Test Mode A (see page 22-88).

1. Clear the DTCs using the HDS.
2. Turn the ignition switch OFF, and then back ON (II).
3. Start and run the engine for at least 5 seconds then turn the engine off.
4. Check for DTCs with the HDS.

   *Is DTC B1168 or B1169 indicated?*

   **YES**—Go to step 5.

   **NO**—Intermittent failure, the F-CAN communication line is OK at this time. Check for loose or poor connections. If the connections are good, check the battery condition (see page 22-63), and the charging system.■

5. Check for DTCs in the PCM with the HDS.

   *Are any DTCs indicated?*

   **YES**—Troubleshoot the PCM DTCs.■

   **NO**—Go to step 6.

6. Turn the ignition switch OFF.
7. Jump the SCS line with the HDS.
8. Disconnect the gauge control module 36P connector.
9. Disconnect PCM connector A (44P).
10. Check for continuity between the No. 28 and No. 29 terminals of the gauge control module 36P connector and the A36 and A44 terminals of the PCM connector A (44P) A36 and A37 respectively.

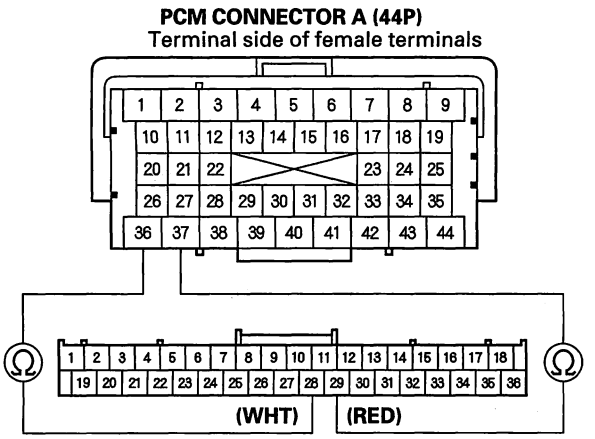


*Is there continuity?*

**YES**—Go to step 11.

**NO**—Repair an open in the wire between the gauge control module and the PCM.■

11. Substitute a known-good gauge control module and reset.
12. Check for DTCs with the HDS.

    *Is DTCs B1168 or B1169 indicated?*

    **YES**—Replace the PCM.■

    **NO**—Replace the original gauge control module.■



BACK

Protected by AR



## DTC B1170: Gauge Control Module Lost Communication with the VSA Modulator-Control Unit (VSA Message)

NOTE: If you are troubleshooting multiple DTCs, be sure to follow the instructions in B-CAN System Diagnosis Test Mode A (see page 22-88).

1. Clear the DTCs with the HDS.

2. Turn the ignition switch OFF, and then back ON (II).

3. Start and run the engine for at least 5 seconds then turn the engine off.

4. Check for DTCs with the HDS.

   *Is DTC B1170 indicated?*

   **YES**—Go to step 5.

   **NO**—Intermittent failure, the F-CAN communication line is OK at this time. Check for loose or poor connections. If the connections are good, check the battery condition (see page 22-63), and the charging system. ■

5. Check for DTCs in the PCM/VSA with the HDS.

   *Are any DTCs indicated?*

   **YES**—Troubleshoot the PCM/VSA DTCs. ■

   **NO**—Go to step 6.

6. Turn the ignition switch OFF.

7. Disconnect the VSA modulator-control unit 46P connector.

8. Disconnect the gauge control module 36P connector.

9. Check for continuity between the No. 28 and No. 29 terminals of the gauge control module 36P connector and the No. 39 and No. 38 terminals of the VSA modulator-control unit 46P connector respectively.

**VSA MODULATOR-CONTROL UNIT 46P CONNECTOR**
Wire side of female terminals

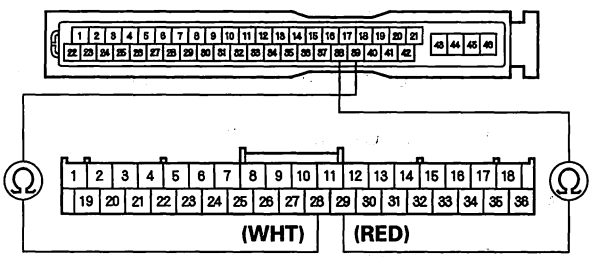


**GAUGE CONTROL MODULE 36P CONNECTOR**
Wire side of female terminals

*Is there continuity?*

**YES**—Go to step 10.

**NO**—Repair an open in the wire between the gauge control module and the VSA modulator-control unit. ■

10. Check for poor connections, power, and ground to the VSA modulator-control unit. If OK, substitute a known-good VSA modulator-control unit.

11. Check for DTCs with the HDS.

    *Is DTC B1170 indicated?*

    **YES**—Replace the gauge control module. ■

    **NO**—Replace the original VSA modulator-control unit. ■

Protected by AR



## DTC Troubleshooting (cont'd)

### DTC B1173: Gauge Control Module Lost Communication with the TPMS Control Unit (TPMS Message)

NOTE: If you are troubleshooting multiple DTCs, be sure to follow the instructions in B-CAN System Diagnosis Test Mode A (see page 22-88).

1. Clear the DTCs with the HDS.
2. Turn the ignition switch OFF and then back ON (II).
3. Check for the DTCs with the HDS.

   *Is DTC B1173 indicated?*

   **YES**—Go to step 4.

   **NO**—Intermittent failure, the F-CAN communication line is OK at this time. Check for loose or poor connections. If the connections are good, check the battery condition (see page 22-63), and the charging system.■

4. Check for DTCs in the TPMS.

   *Are any DTCs indicated?*

   **YES**—Troubleshoot the TPMS DTCs with the HDS.■

   **NO**—Go to step 5.

5. Turn the ignition switch OFF.
6. Disconnect the gauge control module 36P connector.
7. Disconnect the TPMS control unit 20P connector.
8. Check for continuity between the No. 28 and No. 29 terminals of the gauge control module 36P connector and the No. 1 and No. 11 terminals of the TPMS control unit 20P connector respectively.

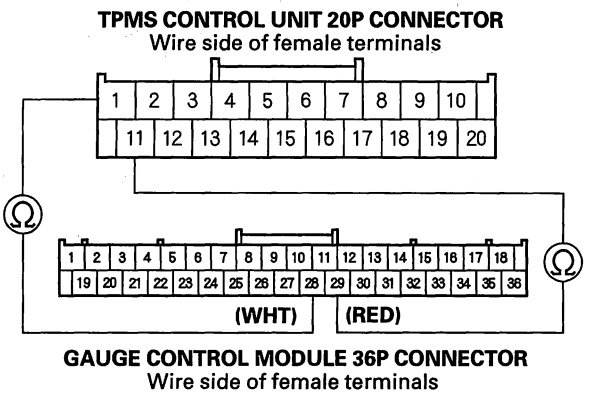


   *Is there continuity?*

   **YES**—Go to step 9.

   **NO**—Repair an open in the wire between the gauge control module and the TPMS control unit.■

9. Check for poor connections, power, and ground to the TPMS control unit. If OK, substitute a known-good TPMS control unit.
10. Check for DTCs with the HDS.

    *Is DTC B1173 indicated?*

    **YES**—Replace the gauge control module.■

    **NO**—Replace the original TPMS control unit.■



BACK

Protected by AR



## DTC B1175: Fuel Level Sensor (Fuel Gauge Sending Unit) Circuit Open

NOTE: If you are troubleshooting multiple DTCs, be sure to follow the instructions in B-CAN System Diagnosis Test Mode A (see page 22-88).

1. Clear the DTCs with the HDS.
2. Turn the ignition switch OFF, and then back ON (II).
3. Wait for 30 seconds.
4. Check for DTCs with the HDS.

   *Is DTC B1175 indicated?*

   **YES**—Go to step 5.

   **NO**—Intermittent failure, the fuel level sensor circuit is OK at this time. Check for loose or poor connections. ■

5. Turn the ignition switch OFF.
6. Disconnect the fuel gauge sending unit 4P connector and the secondary fuel gauge sending unit 4P connector.
7. Check for continuity between fuel gauge sending unit 4P connector terminal No. 3 and secondary fuel gauge sending unit 4P connector terminal No. 1.

**FUEL GAUGE SENDING UNIT 4P CONNECTOR**
Wire side of female terminals

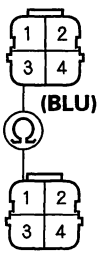


**SECONDARY FUEL GAUGE SENDING UNIT 4P CONNECTOR**
Wire side of female terminals

*Is there continuity?*

**YES**—Go to step 8.

**NO**—Repair an open in the BLU wire. ■

(cont'd)

Protected by AR



## DTC Troubleshooting (cont'd)

8. Disconnect the gauge control module 36P connector.

9. Check for continuity between gauge control module 36P connector terminal No. 27 and fuel gauge sending unit 4P connector terminal No. 1.

**GAUGE CONTROL MODULE 36P CONNECTOR**
Wire side of female terminals

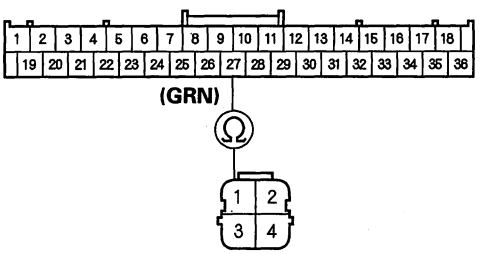


**FUEL GAUGE SENDING UNIT 4P CONNECTOR**
Wire side of female terminals

*Is there continuity?*

**YES**—Go to step 10.

**NO**—Repair an open in the GRN wire.■

10. Check for continuity between gauge control module 36P connector terminal No. 20 and secondary fuel gauge sending unit 4P connector terminal No. 3.

**GAUGE CONTROL MODULE 36P CONNECTOR**
Wire side of female terminals

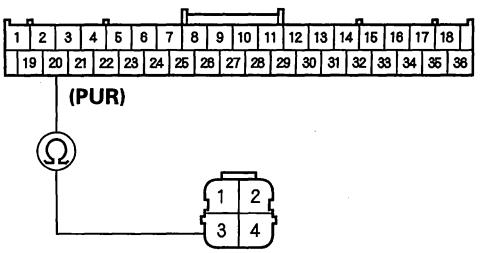


**FUEL GAUGE SENDING UNIT 4P CONNECTOR**
Wire side of female terminals

*Is there continuity?*

**YES**—Go to step 11.

**NO**—Repair an open in the PUR wire.■

11. Do the fuel gauge sending unit test (see page 11-389).

*Is the fuel gauge sending unit OK?*

**YES**—Go to step 12.

**NO**—Replace the fuel gauge sending unit.■

12. Do the secondary fuel gauge sending unit test (see page 11-390).

*Is the secondary fuel gauge sending unit OK?*

**YES**—Replace the gauge control module.■

**NO**—Replace the secondary fuel gauge sending unit.■



BACK

Protected by AR



## DTC B1176: Fuel Level Sensor (Fuel Gauge Sending Unit) Circuit Short

NOTE: If you are troubleshooting multiple DTCs, be sure to follow the instructions in B-CAN System Diagnosis Test Mode A (see page 22-88).

1. Clear the DTCs with the HDS.
2. Turn the ignition switch OFF, and then back ON (II).
3. Wait for 30 seconds.
4. Check for DTCs with the HDS.

   *Is DTC B1176 indicated?*

   **YES**—Go to step 5.

   **NO**—Intermittent failure, the fuel level sensor circuit is OK at this time. Check for loose or poor connections. ■

5. Turn the ignition switch OFF.
6. Disconnect the fuel gauge sending unit 4P connector.
7. Clear the DTCs with the HDS.
8. Turn the ignition switch OFF, and then back ON (II).
9. Wait for 30 seconds.
10. Check for DTCs with the HDS.

    *Is DTC B1176 indicated?*

    **YES**—Go to step 11.

    **NO**—Do the fuel gauge sending unit test (see page 11-389) and secondary fuel gauge sending unit test (see page 11-390).

11. Turn the ignition switch OFF.
12. Disconnect the gauge control module 36P connector.
13. Check for continuity between gauge control module 36P connector terminal No. 27 and body ground.

**GAUGE CONTROL MODULE 36P CONNECTOR**

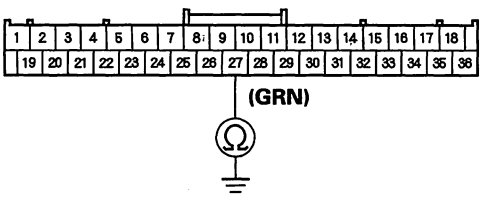


Wire side of female terminals

*Is there continuity?*

**YES**—Repair a short in the wire between the gauge control module and the fuel gauge sending unit. ■

**NO**—Replace the gauge control module. ■

Protected by AR



## DTC Troubleshooting (cont'd)

### DTC B1177: Battery Voltage Abnormal

NOTE: If you are troubleshooting multiple DTCs, be sure to follow the instructions in B-CAN System Diagnosis Test Mode A (see page 22-88).

1. Clear the DTCs with the HDS.
2. Turn the ignition switch OFF, and then back ON (II).
3. Check for DTCs with the HDS.

   *Is DTC B1177 indicated?*

   **YES**—Go to step 8.

   **NO**—Go to step 4.
4. Clear the DTCs with the HDS.
5. Turn the ignition switch OFF, and then back ON (II).
6. Crank the engine.
7. Check for DTCs with the HDS.

   *Is DTC B1177 indicated?*

   **YES**—Go to step 8.

   **NO**—Intermittent failure. The gauge control module and power supply voltage (IG1) that is supplied to the gauge control module are OK at this time. The battery may have been discharged, and recovered. ■
8. Check the battery (see page 22-63) and the charging system.

   *Is the battery condition normal and the charging system OK?*

   **YES**—Go to step 9.

   **NO**—The battery needs a recharge or replacement, or the charging system needs to repaired. ■
9. Turn the ignition switch ON (II).
10. With the gauge control module 36P connector still connected, check for voltage between the body ground and the gauge control module 36P connector No. 35 terminal.

    *Is the voltage above 7.5 V?*

    **YES**—Replace the gauge control module. ■

    **NO**—Repair an open or high resistance in the BRN wire between the ignition switch and the gauge control module. ■



BACK

Protected by AR



## **DTC B1178:** F-CAN Communication Line Error

NOTE: If you are troubleshooting multiple DTCs, be sure to follow the instructions in B-CAN System Diagnosis Test Mode A (see page 22-88).

1. Clear the DTCs with the HDS.
2. Turn the ignition switch OFF, and then back ON (II).
3. Check for DTCs with the HDS.

   *Is DTCs B1168, B1169, B1170, B1173, and B1178 indicated?*

   **YES**—Troubleshooting the indicated DTCs. ■

   **NO**—Intermittent failure, the F-CAN communication line is OK at this time. Check the F-CAN communication line for a short to ground. ■

Protected by AR



## DTC Troubleshooting (cont'd)

### DTC B1187: Gauge Control Module Lost Communication with the SRS Unit (SRS Message)

NOTE: If you are troubleshooting multiple DTCs, be sure to follow the instructions in B-CAN System Diagnosis Test Mode A (see page 22-88).

1. Clear the DTCs with the HDS.
2. Turn the ignition switch OFF, and then back ON (II).
3. Wait for 6 seconds or more.
4. Check for DTCs with the HDS.

   *Is DTC B1187 indicated?*

   **YES**—Go to step 5.

   **NO**—Intermittent failure. The gauge control module is OK at this time.■

5. Check for DTCs in the SRS with the HDS.

   *Are any DTCs indicated?*

   **YES**—Troubleshooting the SRS DTCs.■

   **NO**—Go to step 6.

6. Turn the ignition switch OFF.
7. Disconnect the gauge control module 36P connector.
8. Disconnect the negative cable from the battery, and wait at least 3 minutes before beginning work.
9. Disconnect the SRS unit connector A (28P).
10. Check for continuity between the SRS unit connector A (28P) terminals No. 11 and No. 12 and gauge control module 36P connector No. 28 and No. 29 terminals.

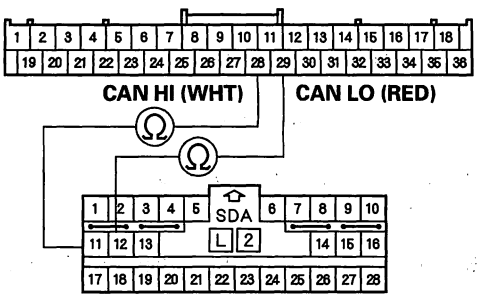


*Are there continuity?*

**YES**—Substitute a known-good SRS unit, and recheck. If DTC B1187 is indicated again, replace the gauge control module.■

**NO**—Repair an open in the wire.■



BACK

Protected by AR



## **DTC B1188:** Gauge Control Module Lost Communication with the MICU (RM Message)

NOTE: If you are troubleshooting multiple DTCs, be sure to follow the instructions in B-CAN System Diagnosis Test Mode A (see page 22-88).

1. Clear the DTCs with the HDS.
2. Turn the ignition switch OFF, and then back ON (II).
3. Wait for 6 seconds or more.
4. Check for DTCs with the HDS.

   *Is DTC B1188 indicated?*

   **YES**—Go to step 5.

   **NO**—Intermittent failure. The gauge control module is OK at this time. Check for loose or poor connections. If the connections are good, check the battery condition (see page 22-63), and the charging system.■

5. Check for DTCs with the HDS.

   *Are DTCs B1188 and B1905 indicated at the same time?*

   **YES**—Faulty MICU; replace the under-dash fuse/relay box.■

   **NO**—Replace the gauge control module.■

Protected by AR



## Gauge Control Module Input Test

NOTE: Before testing, do the gauge control module self-diagnosis procedure, and make sure the B-CAN communication line is OK.

1. Turn the ignition switch OFF.

2. Remove the gauge control module and disconnect the 36P connector from it (see page 22-284).

**GAUGE CONTROL MODULE 36P CONNECTOR**

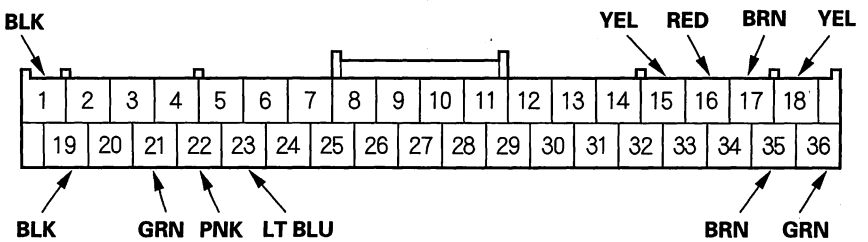


Wire side of female terminals

3. Inspect the connector and socket terminals to be sure they are all making good contact.

   - If the terminals are bent, loose or corroded, repair them as necessary, and recheck the system.
   - If the terminals are OK, go to step 4.

4. With the connector still disconnected, make these input tests at the connector.

   - If any test indicates a problem, find and correct the cause, then recheck the system.
   - If all the input tests prove OK, go to step 5.

| Cavity | Wire | Test condition | Test: Desired result | Possible cause if result is not obtained |
|---|---|---|---|---|
| 15 | YEL | Combination light switch ON | Attach to ground: The illuminations of the ambient lights and seat heater switches lights come on full. | • Faulty LEDs and bulbs<br>• An open in the wire |
| 16 | RED | Combination light switch ON | Attach to ground: The illuminations of the dash lights, the audio unit, and the climate control switch lights come on full bright. | • Faulty LEDs and bulbs<br>• An open in the wire |
| 18 | YEL | Ignition switch ON (II), turn signal switch in LEFT | Check for voltage to ground: There should be battery voltage when the lights are flashing. | • Faulty MICU<br>• Faulty combination light switch<br>• An open in the wire |
| 17 | BRN | Ignition switch ON (II), turn signal switch in RIGHT | Check for voltage to ground: There should be battery voltage when the lights are flashing. | • Faulty MICU<br>• Faulty combination light switch<br>• An open in the wire |



BACK

Protected by AR



5. Reconnect the connector to the gauge control module, and make the input tests at the connector.

- If any test indicates a problem, find and correct the cause, then recheck the system.
- If the input test proves OK, the gauge control module must be faulty; replace it.

| Cavity | Wire | Test condition | Test: Desired result | Possible cause if result is not obtained |
|---|---|---|---|---|
| 1 | BLK | Under all conditions | Check for voltage to ground: There should be less than 0.5 V. | • Poor ground (G501)<br>• An open in the wire |
| 19 | BLK | Under all conditions | Check for voltage to ground: There should be less than 0.5 V. | • Poor ground (G501)<br>• An open in the wire |
| 35 | BRN | Ignition switch ON (II) | Check for voltage to ground: There should be battery voltage. | • Blown No. 10 (7.5 A) fuse in the under-dash fuse/relay box<br>• An open in the wire |
| 36 | GRN | Under all conditions | Check for voltage to ground: There should be battery voltage. | • Blown No. 23 (10 A) fuse in the under-hood fuse/relay box<br>• An open in the wire |
| 21 | GRN (Canada models) | Ignition switch ON (II), washer fluid is half or more in the washer reservoir | Check for voltage to ground: There should be 5 V or more. | • Faulty washer fluid level switch<br>• A short to ground in the wire |
| | | Ignition switch ON (II), washer fluid is empty in the washer reservoir | Check for voltage to ground: There should be less than 1 V. | • Poor ground (G401)<br>• Faulty washer fluid level switch<br>• An open in the wire |
| 22 | PNK | Ignition switch ON (II), brake fluid is full level in the reservoir | Check for voltage to ground: There should be 5 V or more. | • Faulty brake fluid level switch<br>• A short to ground in the wire |
| | | Ignition switch ON (II), brake fluid is lower level in the reservoir | Check for voltage to ground: There should be less than 1 V. | • Poor ground (G451)<br>• Faulty brake fluid level switch<br>• An open in the wire |
| 23 | LT BLU | Ignition switch ON (II), parking brake level pulled | Check for voltage to ground: There should be less than 1 V. | • Faulty parking brake switch<br>• An open in the wire |
| | | Ignition switch ON (II), parking brake level released | Check for voltage to ground: There should be 5 V more. | • Faulty parking brake switch<br>• A short to ground in the wire |

Protected by AR



## Gauge Control Module Replacement

1. Remove the instrument panel (see page 20-100).

2. Remove the four screws from the gauge control module (A), and spread a protective cloth (B) on the upper column cover.

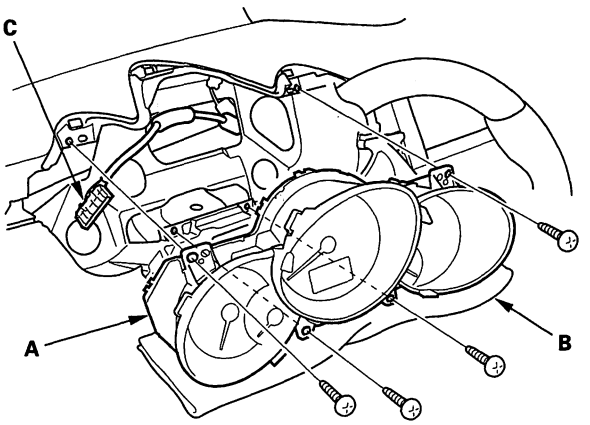


3. Disconnect the 36P connector (C), and remove the gauge control module.

4. Install the gauge in the reverse order or removal.

## Rewriting the ODO Data on a New Gauge Control Module

NOTE:
- If the HDS retrieves the ODO data from the gauge control module, the ODO value on the LCD display will appear as "— — —", making the ODO function unusable, and the HDS will be unable to retrieve additional ODO values.
- Rewriting is not possible on a gauge control module that does not communicate.
- Obtain a new gauge control module before starting the rewriting process.
- Make sure vehicle's battery is fully charged.

1. Before replacing the gauge control module, connect the HDS to the data link connector.

2. Select GAUGES from the BODY ELECTRICAL menu display.

3. Select "Gauge Control Module Replacement (ODO rewrite)" from the ADJUSTMENT menu, and follow the instructions on the display to retrieve the ODO value.

4. Replace the gauge control module.

5. Follow the instructions on the display to write the new ODO value to the new gauge control module.



BACK

Protected by AR



## Multi-information Switch Test/Replacement

1. Remove the driver's airbag assembly (see page 24-146).

2. Disconnect the 7P connector (A) from the multi-information switch (B).

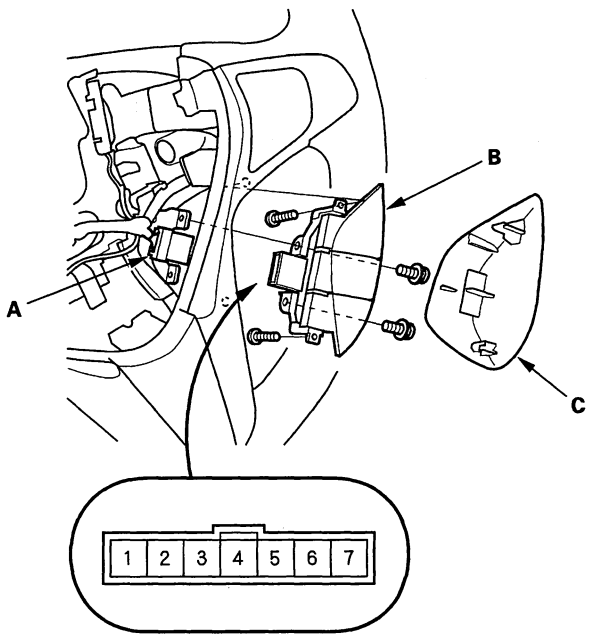


3. Remove the steering wheel cover (C) from the steering wheel (see page 17-23).

4. Remove the multi-information switch from the steering wheel by removing the four screws.

5. Measure resistance between the multi-information switch 7P connector No. 2 and No. 6 terminals in each switch position according to the table.

| Position | Resistance |
|---|---|
| ▲ | About 33 Ω |
| SEL/RESET | About 1.043 kΩ |
| ▼ | About 363 Ω |

6. If the resistance is not as specified, then replace the switch.

7. If the switch is OK, but there is a problem with the switch function, check the cable reel subharness and cable reel.

Protected by AR



## Outside Air Temperature Indicator Calibration

NOTE: To test the outside air temperature sensor (see page 21-79).

### Description

The outside temperature sensor is located behind the center of the front bumper. The gauge control module uses measurements from this sensor to display the outside air temperature.
Because of the location of the sensor, it may be affected by heat reflection from the road, engine and radiator heat, or hot exhaust from surrounding traffic.
These conditions can heat soak the outside air temperature sensor and cause inaccurate readings.
Logic has been written into the gauge control module to help prevent abnormal of fluctuating outside air temperature indicator readings.

### Outside Air Temperature Indicator Logic

Initial outside air temperature indication after the ignition switch is turned ON (II).
If the engine coolant temperature is 140 ℉ (60 ℃) or higher when the ignition switch is turned ON (II), the outside air temperature indicated the last time the key was turned off will be displayed regardless of the current temperature measured by the outside air temperature sensor.

If the engine coolant temperature is 139 ℉ (59 ℃) or lower when the ignition switch is turned ON (II), the current temperature measured by the outside air temperature sensor will be indicated.

### Update to the outside air temperature indicator while driving

If the temperature measured by the outside air temperature sensor is greater than the temperature on the outside air temperature indicator, the outside temperature indicator will increase by 1 ℉ (1 ℃) per minute after the vehicle speed is greater than 19 mph (30 km/h) for more than 1minute and 30 seconds. It will continue to increase until the current outside air temperature is indicated. So, the first change to the outside air temperature indicator is 1 minute and 30 seconds after the vehicle speed is greater than 19 mph (30 km/h). If the vehicle speed drops below 19 mph (30 km/h), the indicator will not update again until the vehicle speed is increased to 19 mph (30 km/h) or more for more than 1 minute and 30 seconds again.

If the outside air temperature is less than 140 ℉ (60 ℃), the temperature increases 1 ℉ (1 ℃) every 2 seconds until the current outside air temperature.

If the outside air temperature is less than the indicated temperature, the temperature will decrease 1 ℉ (1 ℃) every 2 seconds until the current outside air temperature is indicated regardless of vehicle speed.

### Troubleshooting

If the indicator displays "— — —" for more than 2 seconds after selecting the outside air temperature display mode, check the climate control system or multiplex integrated control system for DTCs (see B-CAN System Diagnosis Test Mode A) (see page 22-88).

### Calibration

The outside air temperature indicator's displayed temperature can be recalibrated ±5 ℉ or ±3 ℃ to meet the client's expectations.

Calibrate the outside air temperature with the HDS or by custom memory setting.



BACK

Protected by AR



## Component Location Index

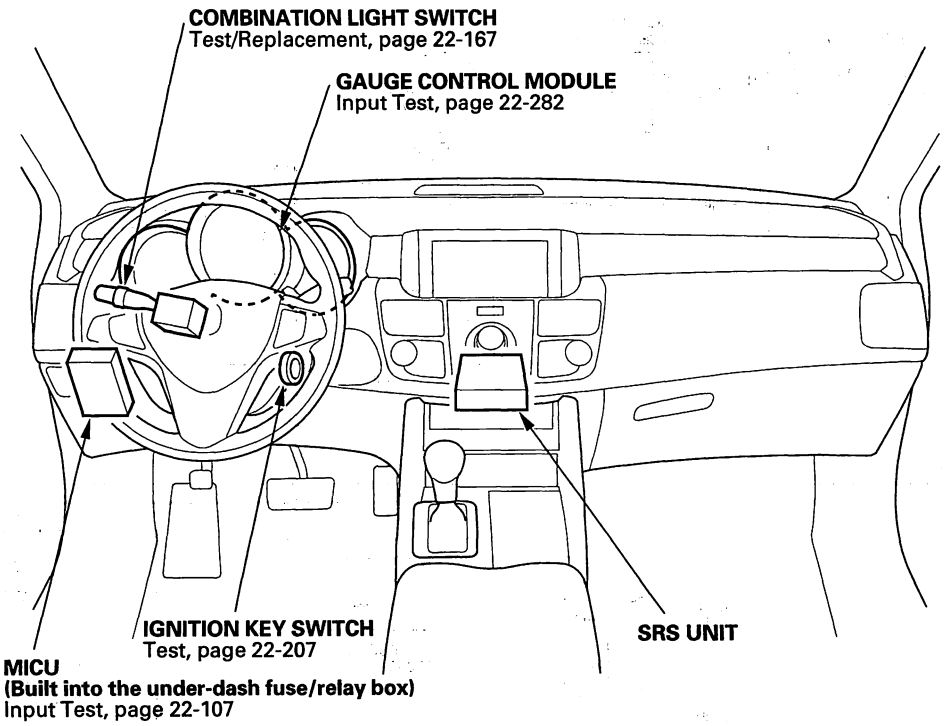


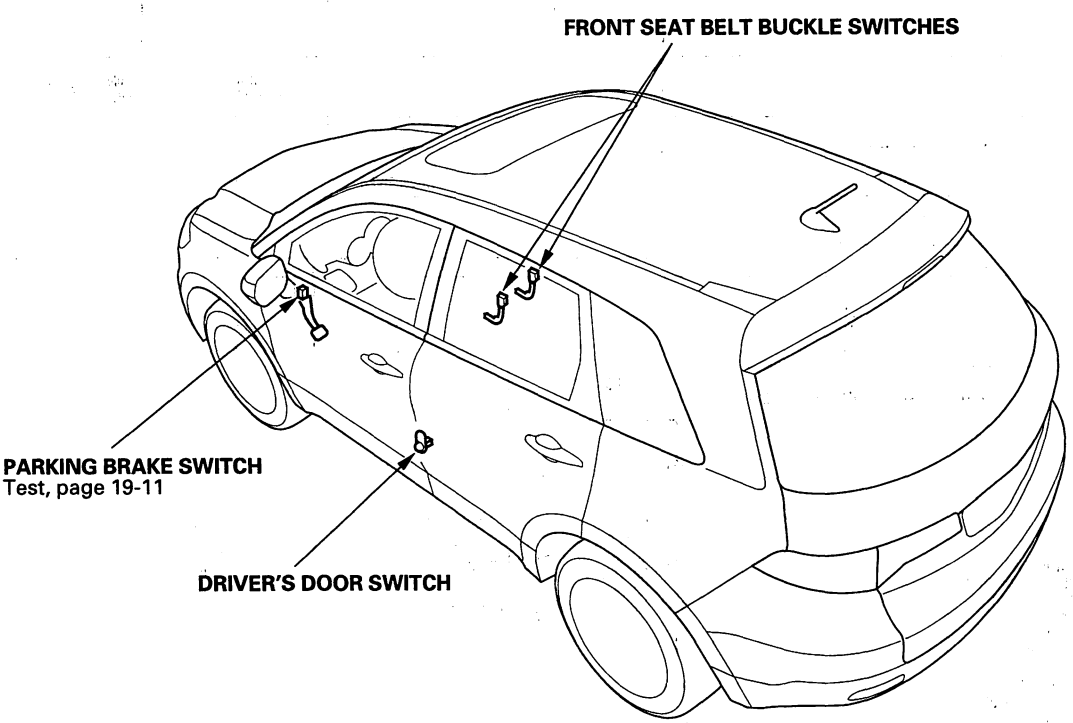

Protected by AR

# Reminder Systems

## Circuit Diagram

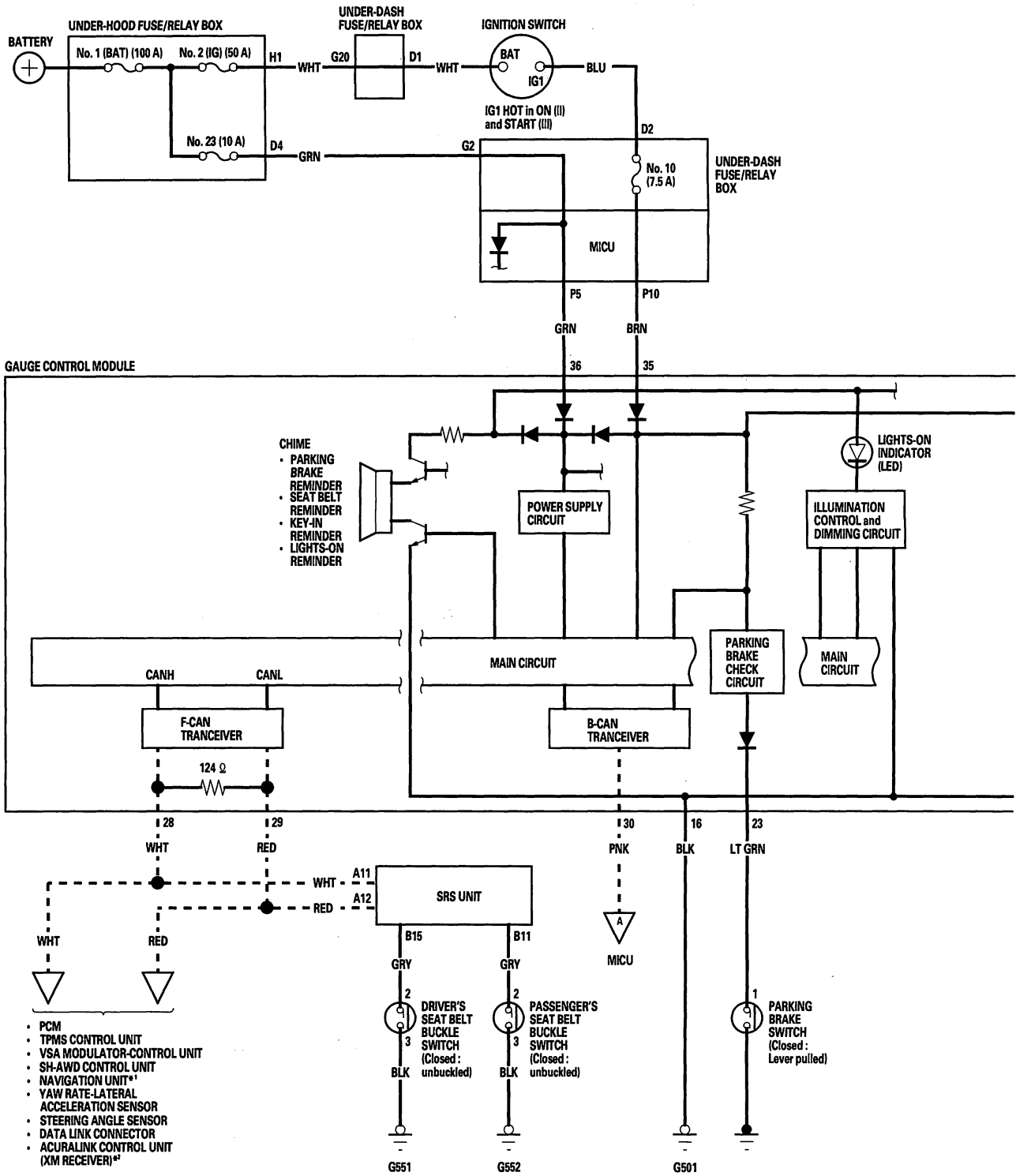




BACK

Protected by AR



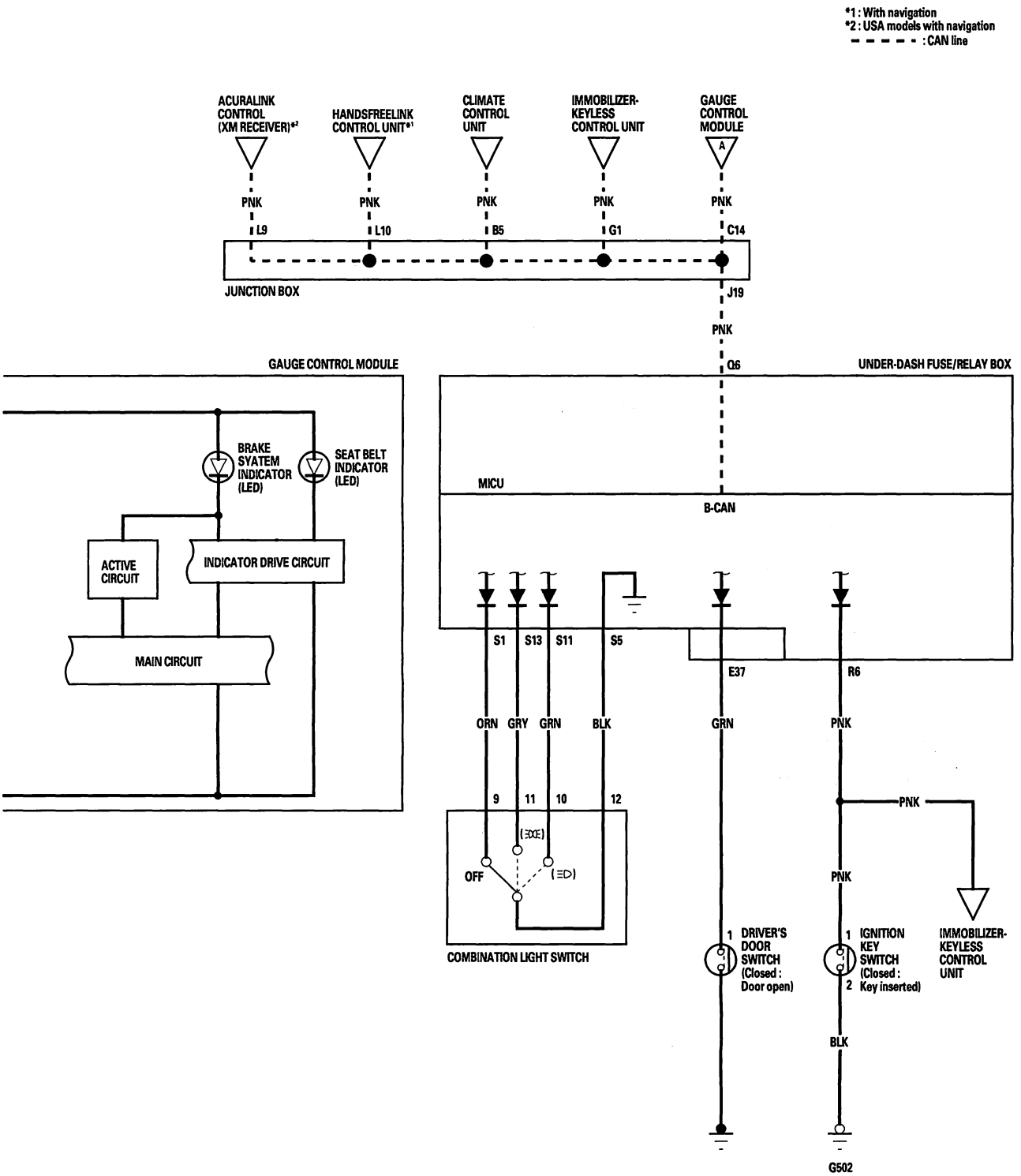

Protected by AR



## Component Location Index

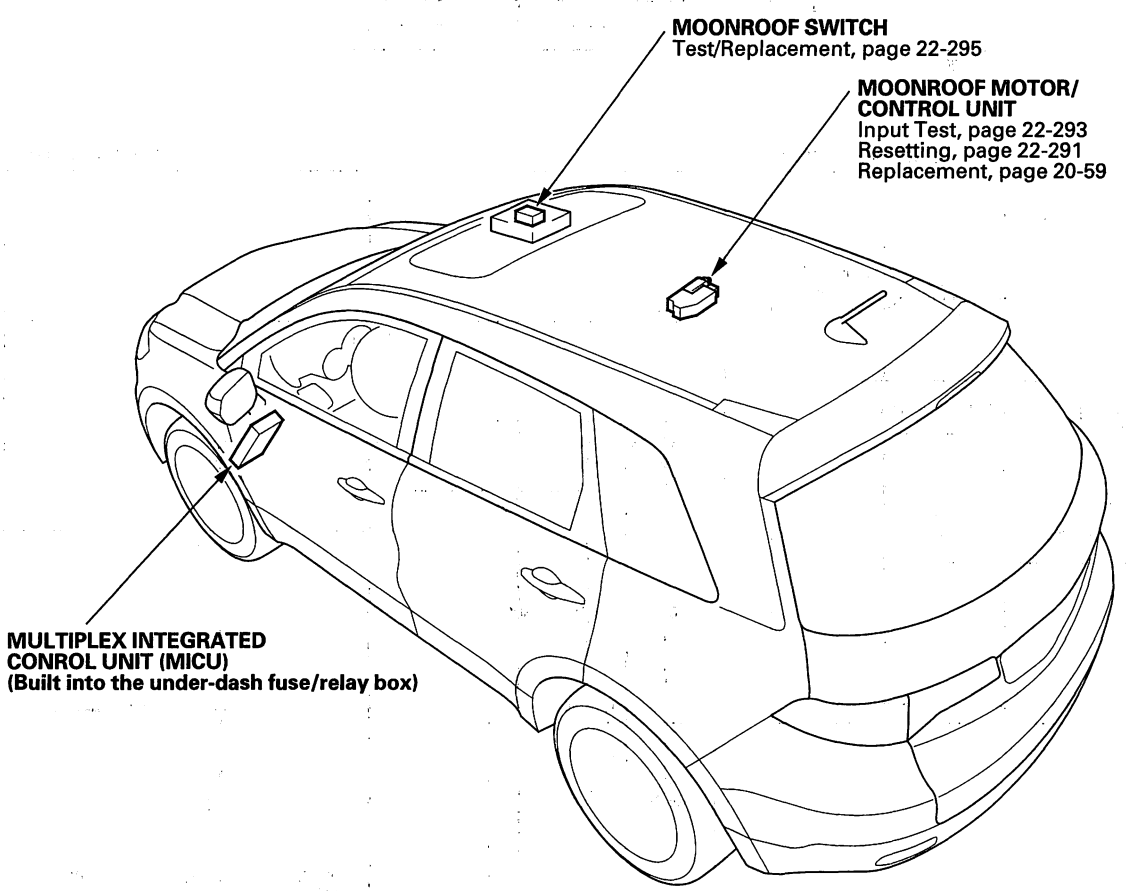




BACK

Protected by AR



## Resetting the Moonroof Control Unit

NOTE:
- Perform resetting the moonroof control unit with all the doors and tailgate closed.
- The clear procedure must be done first.

Resetting the moonroof is required when any of the following has occurred:

- The moonroof was moved manually while the battery was dead or disconnected.
- The moonroof motor was replaced with a new one.
- Any of components related to the moonroof were replaced.
  - Wind deflector
  - Moonroof glass
  - Moonroof seal
  - Moonroof glass bracket
  - Moonroof cables, etc.

To reset the moonroof control unit, do these steps:

1. Turn the ignition switch OFF.
2. Press in and hold the tilt switch, and turn the ignition switch ON (II).
3. Release the tilt switch, and turn the ignition switch OFF.
4. Repeat step 2 and 3 four times.
5. Confirm the auto open/close function does not work. If the auto open/close function does work, repeat the clear procedure.
6. Press and hold the moonroof open switch for 3 additional seconds after the moonroof is fully opened.
7. Press and hold the moonroof close switch for 3 additional seconds after the moonroof is fully closed (tilted).
8. Confirm that the moonroof control unit is reset by using the moonroof AUTO OPEN and AUTO CLOSE function.

Protected by AR

# Moonroof

## Circuit Diagram

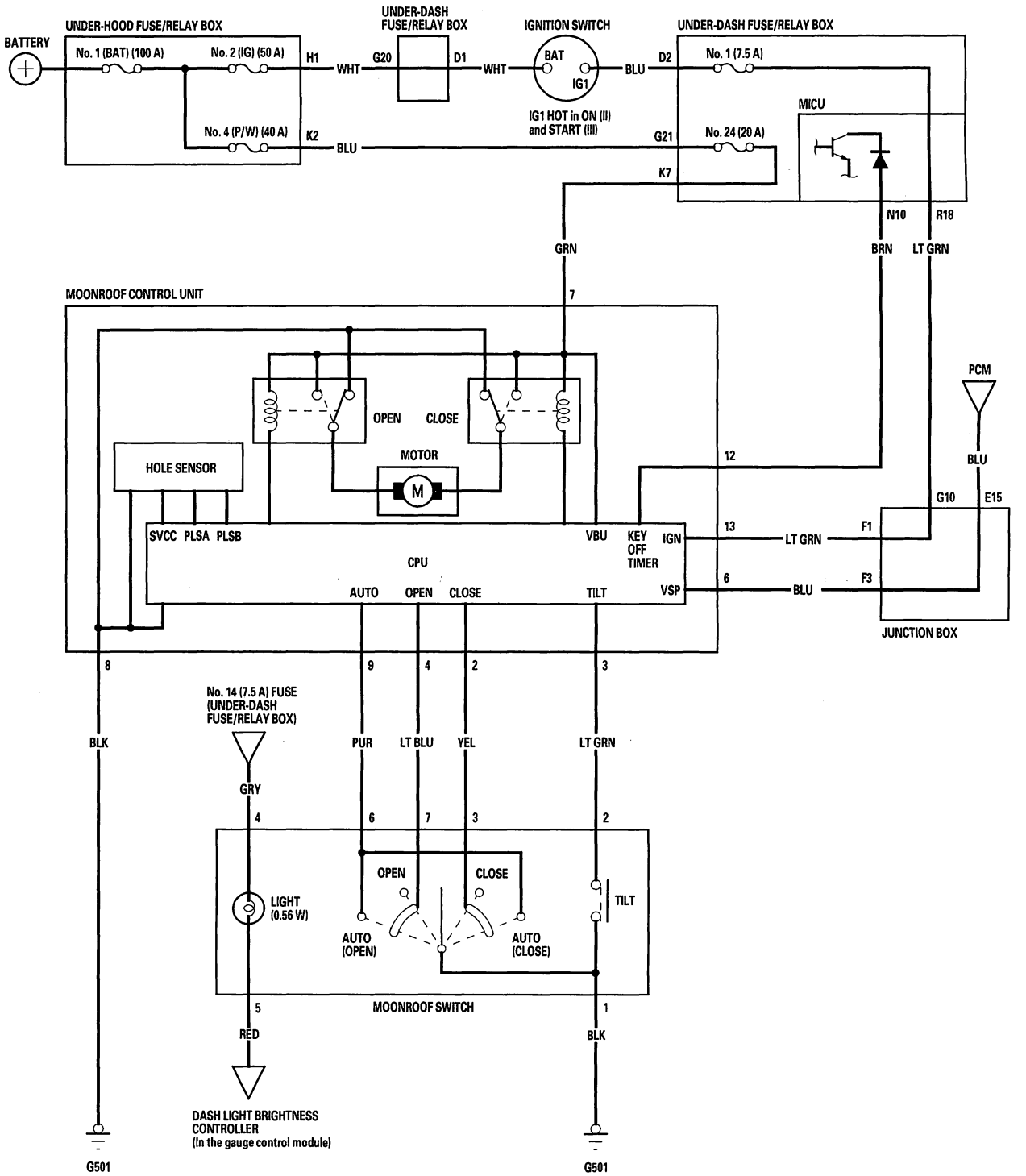




BACK

Protected by AR



## Moonroof Control Unit Input Test

NOTE: If the moonroof works OK manually, but will not work in AUTO, or reverses frequently (obstacle detection), do the moonroof calibration (see page 22-291) before proceeding with the input test.

1. Turn the ignition switch OFF.
2. Remove the headliner (see page 20-85).
3. Disconnect the 14P connector (A) from the moonroof control unit (B).

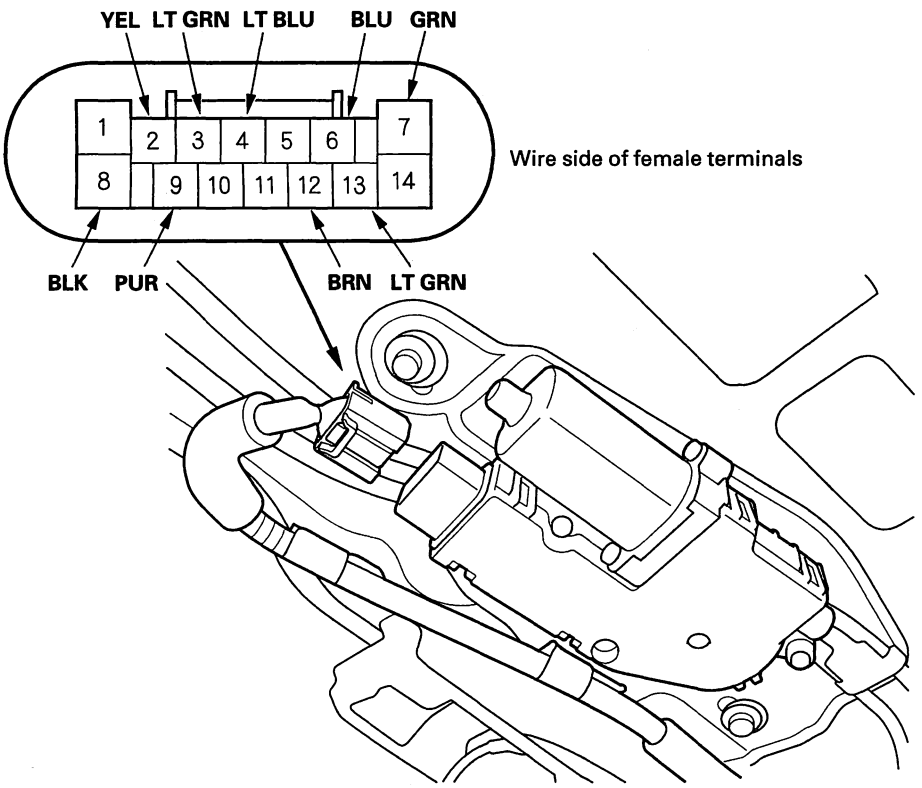


4. Inspect the connector and socket terminals to be sure they are all making good contact.
   - If the terminals are bent, loose or corroded, repair them as necessary, and recheck the system.
   - If the terminals look OK, go to step 5.

(cont'd)

Protected by AR



## Moonroof Control Unit Input Test (cont'd)

5. Reconnect the connector to the control unit, and make these input tests at the connector.

   - If any test indicates a problem, find and correct the cause, then recheck the system.
   - If all the input tests prove OK, go to step 6.

| Cavity | Wire | Test condition | Test: Desired result | Possible cause if result is not obtained |
|---|---|---|---|---|
| 7 | GRN | Under all conditions | Check for voltage to ground:<br>There should be battery voltage. | • Blown No. 24 (20 A) fuse in the under-dash fuse/relay box<br>• An open in the wire |
| 13 | LT GRN | Ignition switch ON (II) | Check for voltage to ground:<br>There should be battery voltage. | • Blown No. 1 (7.5 A) fuse in the under-dash fuse/relay box<br>• Faulty junction box<br>• An open in the wire |
| 8 | BLK | Under all conditions | Check for voltage to ground:<br>There should be less than 0.5 V. | • Poor ground (G501)<br>• An open in the wire |
| 9 | PUR | Moonroof switch in AUTO OPEN or AUTO CLOSE position | Check for voltage between the No. 7 and No. 9 terminals:<br>There should be battery voltage. | • Poor ground (G501)<br>• Faulty moonroof switch<br>• An open in the wire |
| 3 | LT GRN | Moonroof switch in TILT position | Check for voltage between the No. 7 and No. 3 terminals:<br>There should be battery voltage. | • Poor ground (G501)<br>• Faulty moonroof switch<br>• An open in the wire |
| 2 | YEL | Moonroof switch in CLOSE position | Check for voltage between the No. 7 and No. 2 terminals:<br>There should be battery voltage. | • Poor ground (G501)<br>• Faulty moonroof switch<br>• An open in the wire |
| 4 | LT BLU | Moonroof switch in OPEN position | Check for voltage between the No. 7 and No. 4 terminals:<br>There should be battery voltage. | • Poor ground (G501)<br>• Faulty moonroof switch<br>• An open in the wire |

6. Check the PCM DTCs. If there is no DTC, jump the SCS line with the HDS, then disconnect the PCM connector A (44P), and the moonroof control unit/motor 14P connector.

7. Make these input tests at the connector.

   - If any test indicates a problem, find and correct the cause, then recheck the system.
   - If all the input tests prove OK, the control unit must be faulty; replace the moonroof control unit/motor.

| Cavity | Wire | Test condition | Test: Desired result | Possible cause if result is not obtained |
|---|---|---|---|---|
| 6 | BLU | Under all conditions | Check for continuity between the No. 6 terminal and PCM connector A (44P) No. 29 terminal:<br>There should be continuity. | • Faulty junction box<br>• An open in the wire |
| | | | Check for continuity between the No. 6 terminal and body ground:<br>There should be no continuity. | A short to ground in the wire |
| 12 | BRN | Under all conditions | Check for continuity between the No. 12 terminal and MICU connector N (14P) No. 10 terminal:<br>There should be continuity. | An open in the wire |
| | | | Check for continuity between the No. 12 terminal and body ground:<br>There should be no continuity. | A short to ground in the wire |



BACK

Protected by AR



## Moonroof Switch Test/Replacement

1. Carefully pry off the lens with a small screwdriver (see page 22-197).

2. Pull down the roof console (A) holding the center part of the roof console.

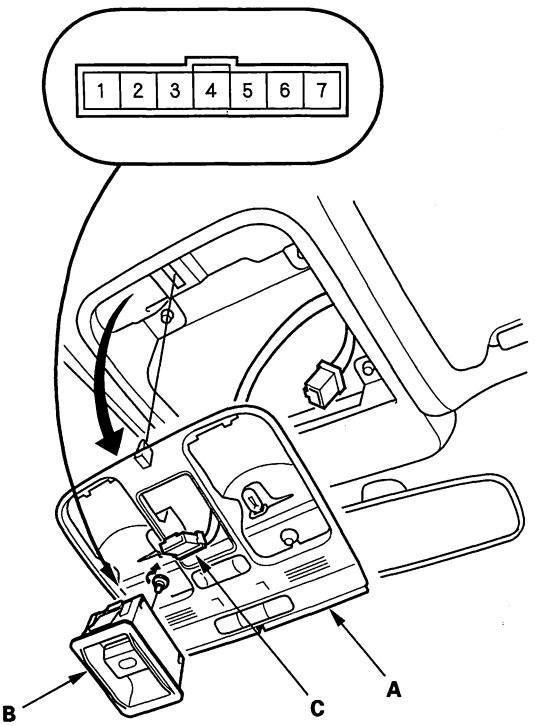


3. Carefully push out the moonroof switch (B) from behind the roof console, then disconnect the 7P connector (C) from the switch.

4. Check for continuity between the terminals in each switch position according to the table.

| Position \ Terminal | 1 | 2 | 3 | 6 | 7 | 4 | | 5 |
|---|---|---|---|---|---|---|---|---|
| OPEN | ○ | | | | ○ | ○ | ⊗ | ○ |
| CLOSE | ○ | | ○ | | | ○ | ⊗ | ○ |
| TILT | ○ | ○ | | | | ○ | ⊗ | ○ |
| CLOSE AUTO | ○ | | ○ | ○ | | ○ | ⊗ | ○ |
| OPEN AUTO | ○ | | | ○ | ○ | ○ | ⊗ | ○ |

5. If the continuity check is not as specified, check the bulb. If the bulb is OK, replace the switch.

Protected by AR

# Accessory Power Sockets

## Component Location Index

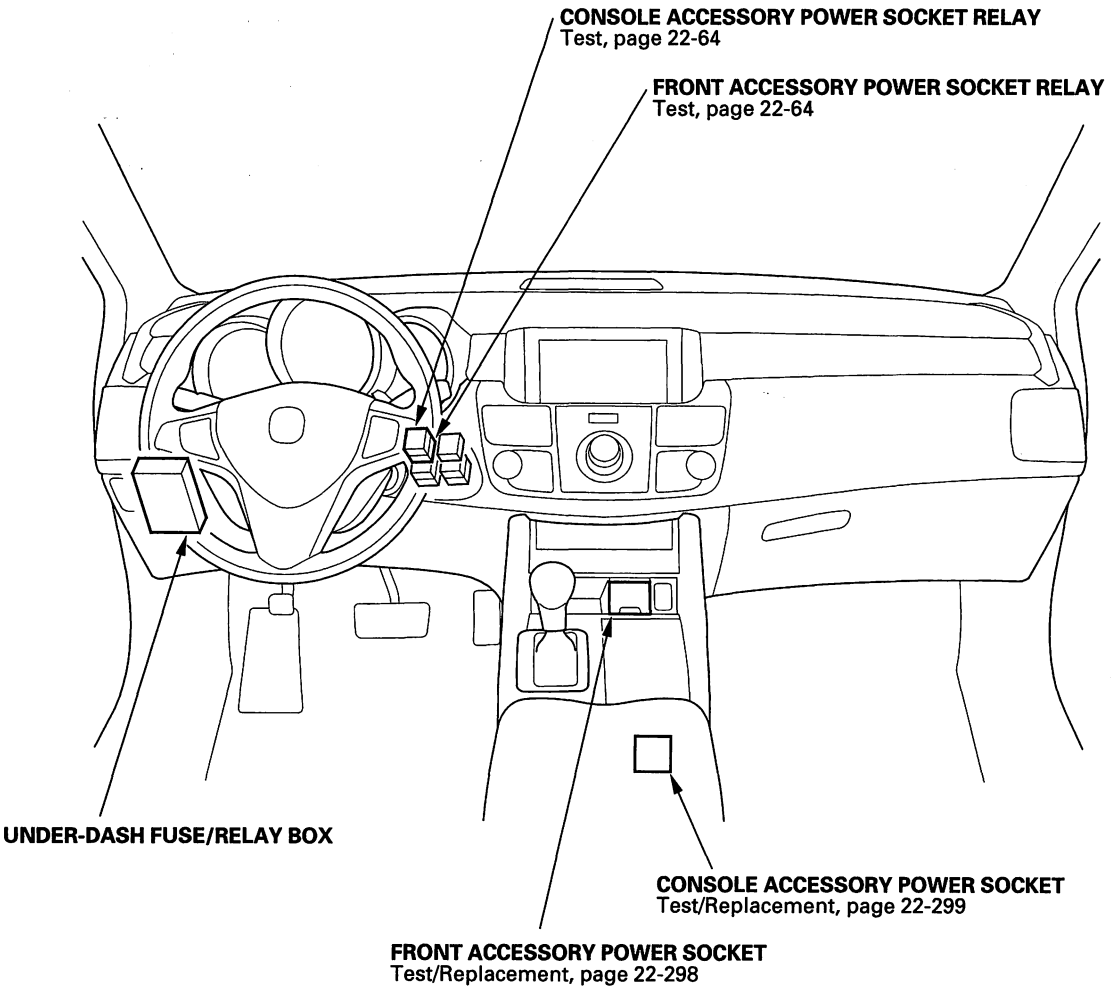




BACK

Protected by AR



## Circuit Diagram

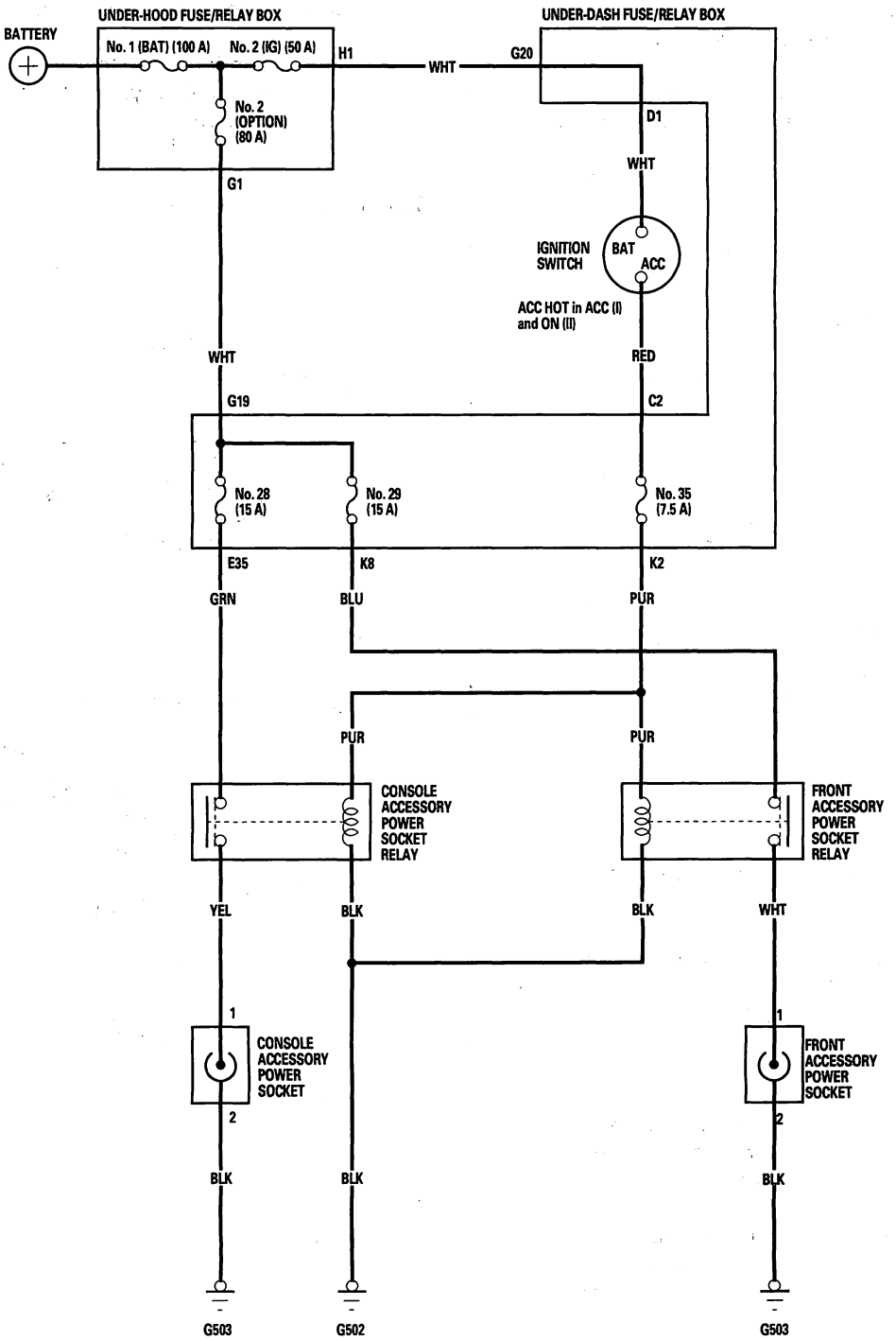

Protected by AR

# Accessory Power Sockets

## Front Accessory Power Socket Test/Replacement

NOTE: If both the front and consle accessory power sockets do not work, check the No. 35 (7.5 A) fuse in the under-dash fuse/relay box or poor connection at G502.

1. Remove the center console panel (see step 3 on page 20-92) and audio pocket (see page 20-97).

2. Disconnect the 2P connector (A) from the front accessory power socket (B).

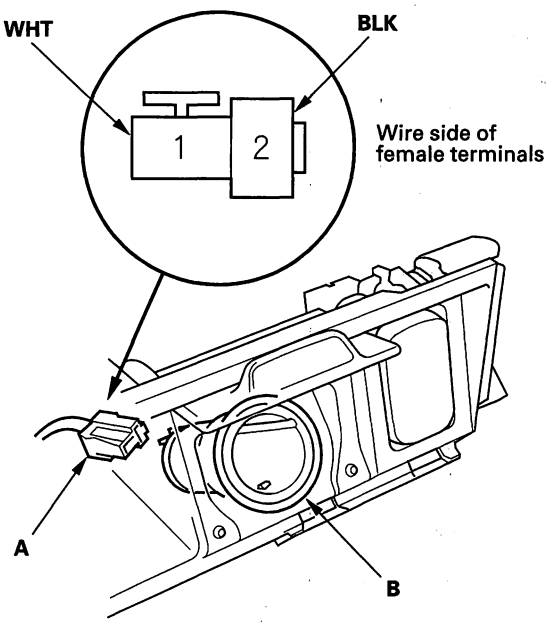


3. Inspect the connector terminals to be sure they are all making good contact.

   - If the terminals are bent, loose, or corroded, repair them as necessary and recheck the system.
   - If the terminals look OK, go to step 4.

4. Turn the ignition switch to ACC (I).

5. Check for voltage between the power accessory socket 2P connector No. 1 terminal and body ground. There should be battery voltage.

   - If there is battery voltage, go to step 6.
   - If there is no battery voltage, check for:
     - Blown No. 29 (15 A) fuse in the under-dash fuse/relay box.
     - Faulty front accessory power socket relay.
     - An open in the wire.

6. Check for continuity between the No. 2 terminal and body ground. There should be continuity.

   - If there is continuity, go to step 7.
   - If there is no continuity, check for:
     - Poor ground (G 503).
     - An open in the wire.

7. Remove the socket (A).

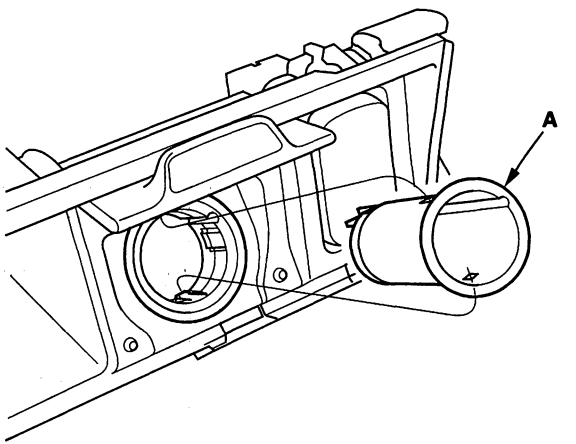


8. Remove the housing (A) from the panel.

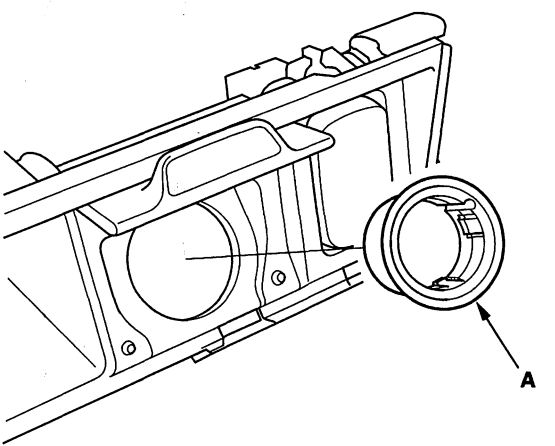


9. Install the power socket in the reverse order of removal.



BACK

Protected by AR



## Console Accessory Power Socket Test/Replacement

NOTE: If both the front and console accessory power sockets do not work, check the No. 35 (7.5 A) fuse in the under-dash fuse/relay box or poor connection at G502.

1. Remove the center console (see page 20-92).

2. Disconnect the 2P connector (A) from the console accessory power socket (B).

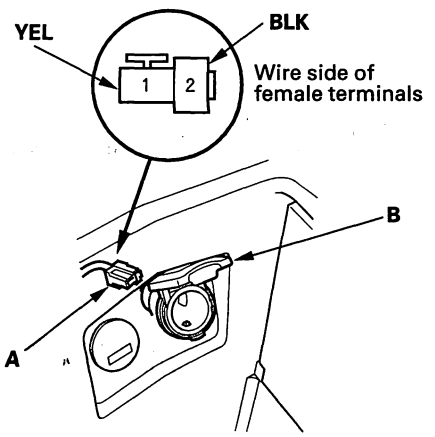


3. Inspect the connector terminals to be sure they are all making good contact.

   - If the terminals are bent, loose, or corroded, repair them as necessary and recheck the system.
   - If the terminals look OK, go to step 4.

4. Turn the ignition switch to ACC (I), and check for voltage between the No. 1 terminal and body ground. There should be battery voltage.

   - If there is battery voltage, go to step 5.
   - If there is no battery voltage, check for:
     - Blown No. 28 (15 A) fuse in the under-dash fuse/relay box.
     - Faulty console accessory power socket relay.
     - An open in the wire.

5. Check for continuity between the No. 2 terminal and body ground. There should be continuity.

   - If there is continuity, go to step 6.
   - If there is no continuity, check for:
     - Poor ground (G 503).
     - An open in the wire.

6. Remove the socket (A).

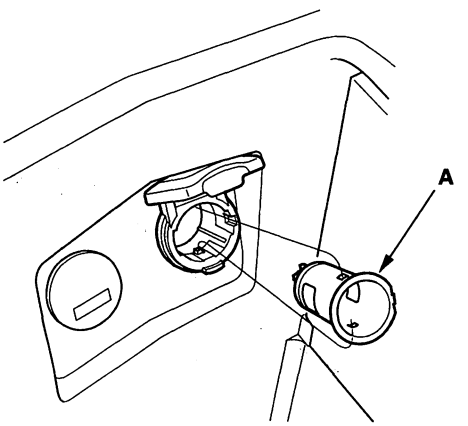


7. Remove the housing (A) from the panel.

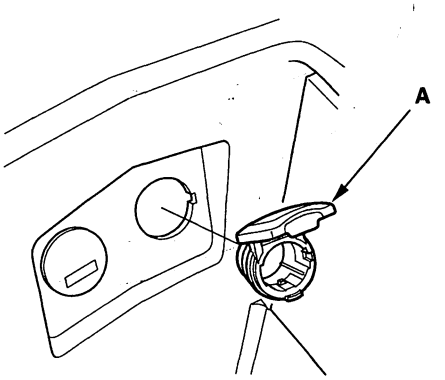


8. Install the power socket in the reverse order of removal.

Protected by AR

# Power Mirrors

## Component Location Index

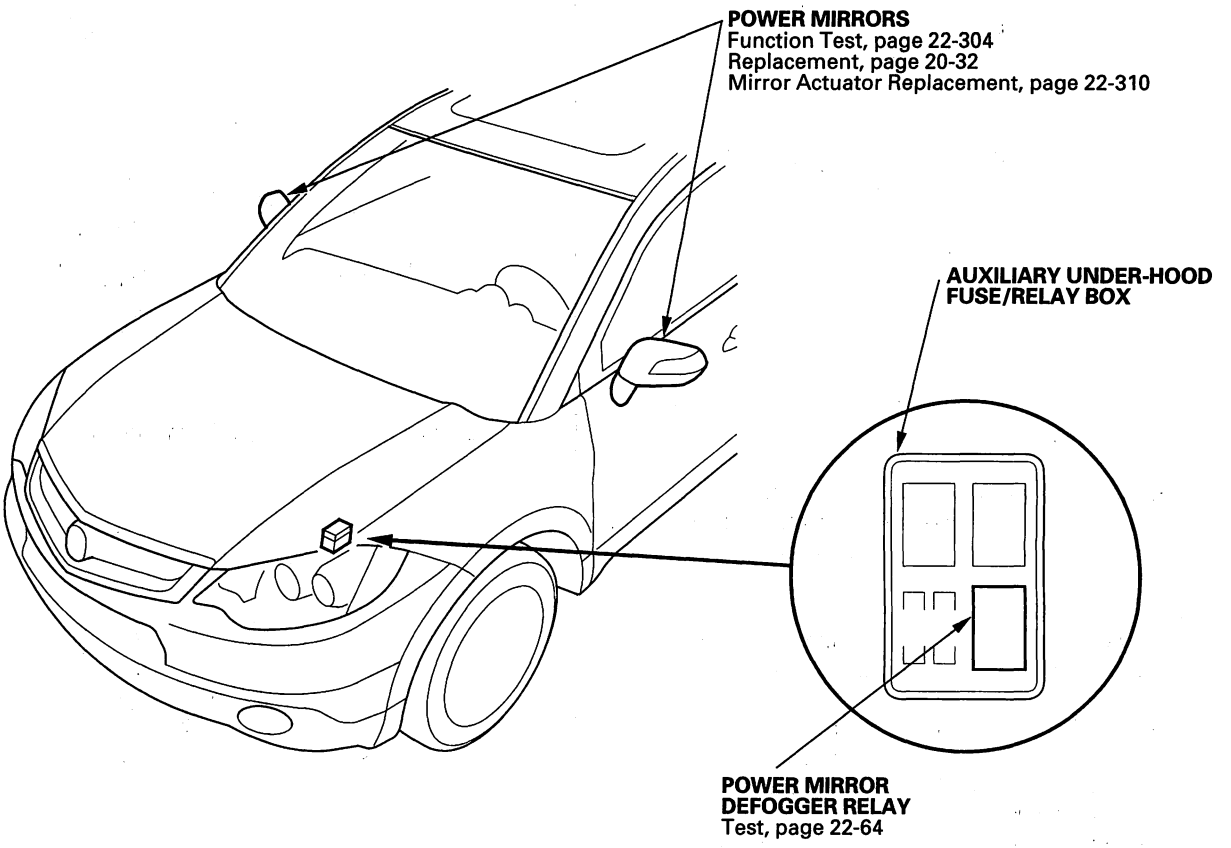




BACK

Protected by AR



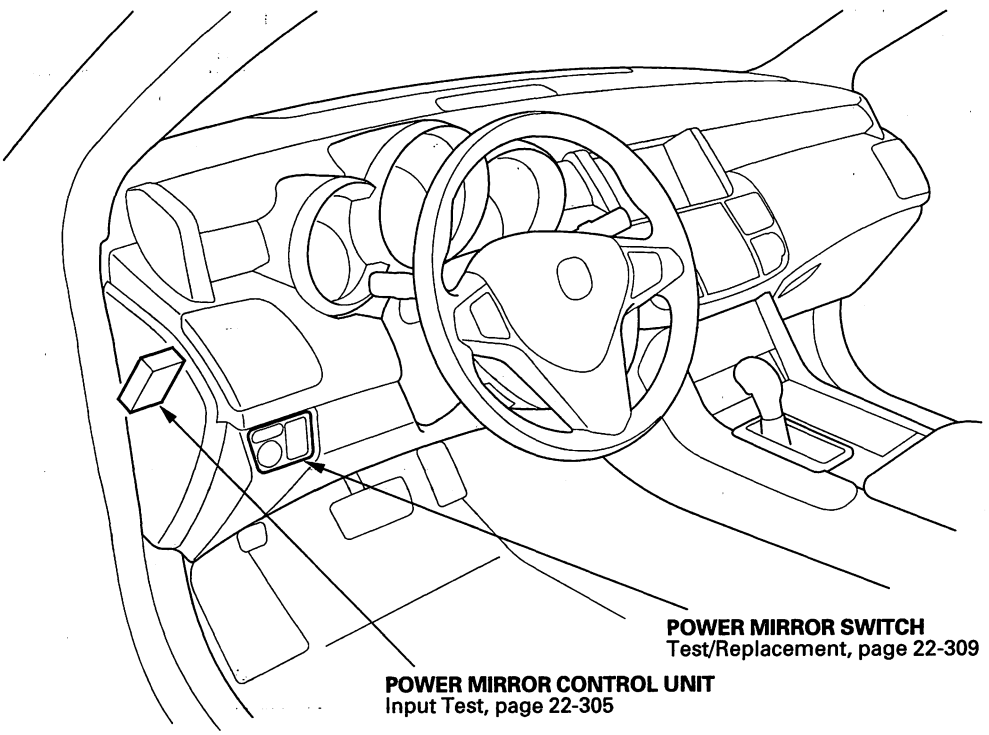

Protected by AR

# Power Mirrors

## Circuit Diagram

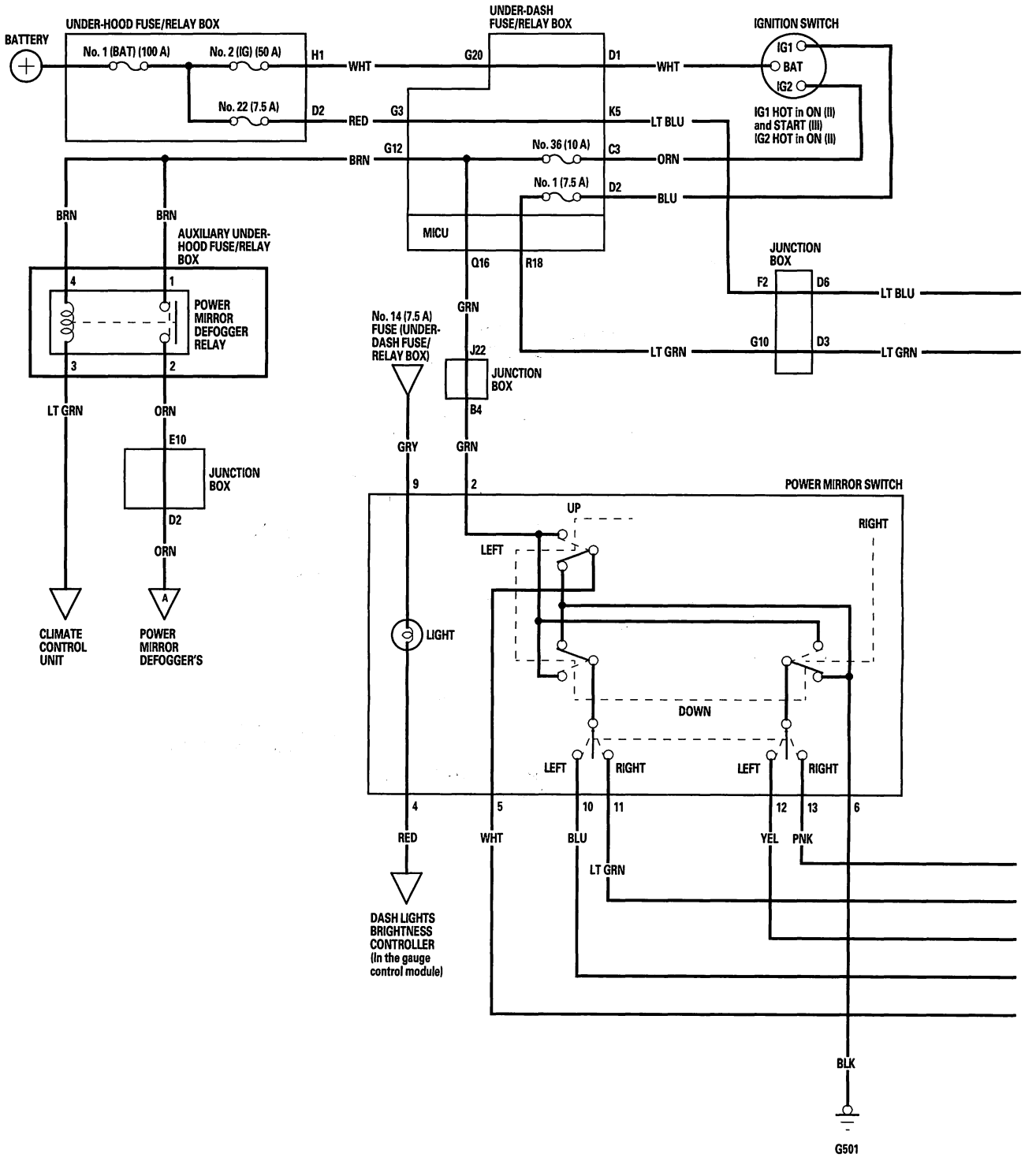




BACK

Protected by AR



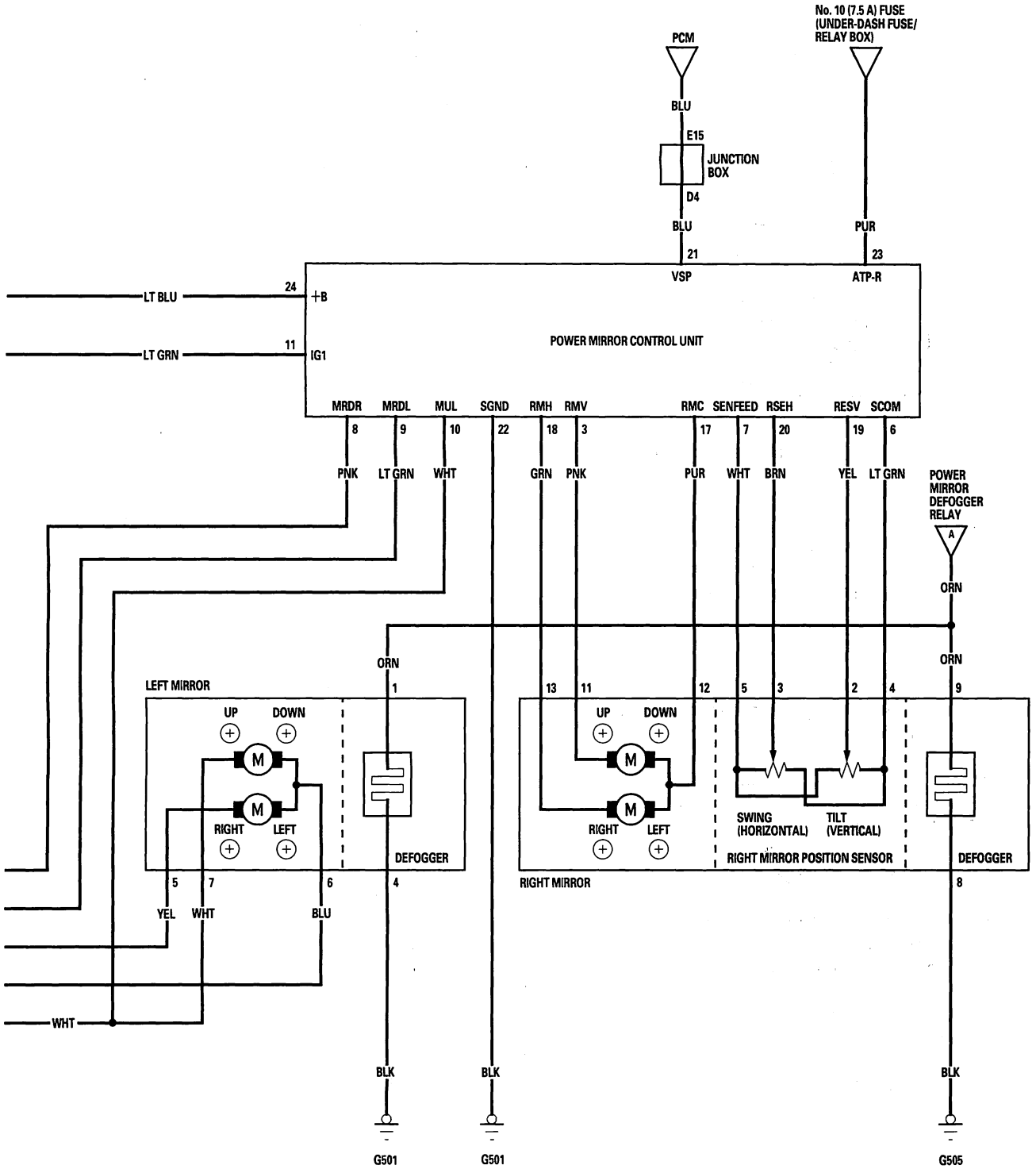

Protected by AR

# Power Mirrors

## Function Test

1. Remove the driver's switch panel (see page 20-102).

2. Disconnect the mirror switch 13P connector (A) from the power mirror switch (B).

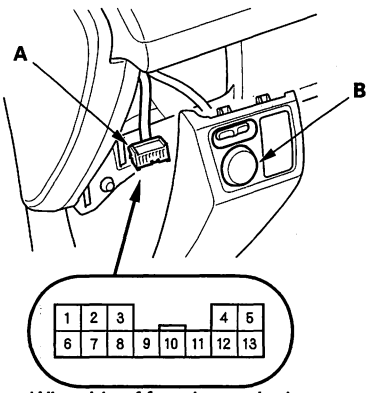

Wire side of female terminals

3. Choose the appropriate test based on the symptom:

   - Both mirrors don't work, go to step 4.
   - Left mirror doesn't work, go to step 6.
   - Right mirror doesn't work, go to step 7.
   - Defogger doesn't work, go to step 8.

**Both mirrors**

4. Check for voltage between the No. 2 terminal and body ground with the ignition switch ON (II). There should be battery voltage.

   - If there is no battery voltage, check for:
     – Blown No. 36 (10 A) fuse in the under-dash fuse/relay box.
     – An open in the GRN wire.
   - If there is battery voltage, go to step 5.

5. Check for continuity between the No. 6 terminal and body ground. There should be continuity.

   - If there is no continuity, check for:
     – An open in the BLK wire.
     – Poor ground (G 501).
   - If there is continuity, check both mirrors individually.

**Left mirror**

6. Connect the No. 2 and No. 10 terminals, and the No. 5 and No. 6 terminals with jumper wires. The left mirror should tilt down with the ignition switch ON (II). Connect the No. 12 and No. 6 terminals with jumper wires and the mirror should rotate left.

   - If the left mirror does not tilt down, check for an open in the WHT wire between the left mirror and the mirror switch 13P connector. If the wire is OK, check the left mirror actuator.
   - If the mirror neither tilts down nor swings left, repair the BLU wire.
   - If the mirror works properly, check the mirror switch.

**Right mirror**

7. Connect the No. 2 and No. 13 terminals, and the No. 5 and No.6 terminals with jumper wires. The right mirror should tilt down with the ignition switch ON (II). Connect the No. 2 and No. 11 terminals, and the No. 13 and No. 6 terminals with jumper wires and the mirror should rotate left.

   - If the mirror does not tilt down, check for an open in the WHT wire between the right mirror and the mirror switch 13P connector. If the wire is OK, check the power mirror control unit or right mirror actuator.
   - If the mirror neither tilts down nor swings left, repair the LT GRN wire.
   - If the mirror works properly, check the mirror switch.

**Defogger**

8. Connect the power mirror defogger relay No. 1 and No. 2 terminals in the auxiliary under-hood fuse/relay box with a jumper wire, and check for voltage between the No. 1 terminal of the mirror connectors and body ground. There should be battery voltage and both mirrors should warm up with the ignition switch ON (II).

   - If there is no voltage or neither warms up, check for:
     – An open in the ORN wire.
     – Faulty junction box
     – Blown No. 36 (10 A) fuse in the under-dash fuse/relay box.
   - If only one fails to warm up, check:
     – Its defogger.
     – Poor ground (G501 or G505).
   - If both warm up, check the climate control unit.



BACK

Protected by AR



## Power Mirror Control Unit Input Test

1. Remove the driver's dashboard undercover (see page 20-102).

2. Disconnect the 24P connector (A) from the power mirror control unit (B).

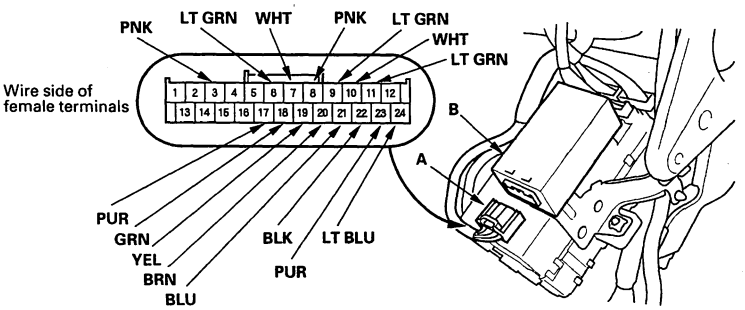


3. Inspect the connector and socket terminals to be sure they are all making good contact.

   - If the terminals are bent, loose or corroded, repair them as necessary, and recheck the system.
   - If the terminals look OK, go to step 4.

4. Reconnect the 24P connector to the control unit, and make these input tests at the connector.

   - If any test indicates a problem, find and correct the cause, then recheck the system.
   - If all the input tests prove OK, go to step 5.

| Cavity | Wire | Test condition | Test: Desired result | Possible cause if result is not obtained |
|---|---|---|---|---|
| 24 | LT BLU | Under all conditions | Check for voltage to ground: There should be battery voltage. | • Blown No. 22 (7.5 A) fuse in the under-hood fuse/relay box<br>• Faulty under-dash fuse/relay box<br>• Faulty junction box<br>• An open in the wire |
| 11 | LT GRN | Ignition switch ON (II) | Check for voltage to ground: There should be battery voltage. | • Blown No. 2 (IG) (50 A) fuse in the under-hood fuse/relay box<br>• Blown No. 1 (7.5 A) fuse in the under-dash fuse/relay box<br>• Faulty under-dash fuse/relay box<br>• Faulty junction box<br>• An open in the wire |
| 22 | BLK | Under all conditions | Check for voltage to ground: There should be less then 0.1 V. | • Poor ground (G501)<br>• An open in the wire |
| 8 | PNK | Ignition switch ON (II), the power mirror selector switch in the RIGHT position, and the right edge of the mirror position switch pushed. | Check for voltage to ground: There should be battery voltage. | • Blown No. 36 (10 A) fuse in the under-dash fuse/relay box<br>• Faulty junction box<br>• Faulty power mirror switch<br>• An open in the wire |

(cont'd)

Protected by AR



## Power Mirror Control Unit Input Test (cont'd)

| Cavity | Wire | Test condition | Test: Desired result | Possible cause if result is not obtained |
|---|---|---|---|---|
| 9 | LT GRN | Ignition switch ON (II), the power mirror selector switch in the RIGHT position, and the bottom edge of the mirror position switch pushed. | Check for voltage to ground: There should be battery voltage. | • Blown No. 36 (10 A) fuse in the under-dash fuse/relay box<br>• Faulty junction box<br>• Faulty power mirror switch<br>• An open in the wire |
| 10 | WHT | Ignition switch ON (II), the power mirror selector switch in the RIGHT position, and the top edge of the mirror position switch pushed. | Check for voltage to ground: There should be battery voltage. | • Blown No. 36 (10 A) fuse in the under-dash fuse/relay box<br>• Faulty junction box<br>• Faulty power mirror switch<br>• An open in the wire |
| 23 | PUR | Ignition switch ON (II) and the transmission range switch in R position. | Check for voltage to ground: There should be less then 0.1 V. | • Faulty transmission range switch<br>• An open in the wire |
| | | Ignition switch ON (II) and the transmission range switch in any position except R. | Check for voltage to ground: There should be battery voltage. | • Blown No. 10 (7.5 A) fuse in the under-dash fuse/relay box<br>• Faulty under-dash fuse/relay box<br>• Faulty transmission range switch |

5. Check the PCM DTCs. If there is no DTC, jump the SCS line with the HDS, then disconnect the PCM connector A (44P), and the power mirror control unit 24P connector.

6. Make these input tests at the connector.

   - If any test indicates a problem, find and correct the cause, then recheck the system.
   - If all the input tests prove OK, the control unit must be faulty; replace the power mirror control unit.

| Cavity | Wire | Test condition | Test: Desired result | Possible cause if result is not obtained |
|---|---|---|---|---|
| 3<br>•<br>17<br>•<br>18 | PNK<br>•<br>PUR<br>•<br>GRN | Under all conditions | Connect the No. 24 and No. 3 terminals, and No. 17 and No. 22 terminals: The left power mirror moves UP. | • Faulty right power mirror actuator<br>• An open in the wire |
| | | | Connect the No. 24 and No. 18 terminals, and No. 17 and No. 22 terminals: The left power mirror moves RIGHT. | • Faulty right power mirror actuator<br>• An open in the wire |



BACK

Protected by AR



| Cavity | Wire | Test condition | Test: Desired result | Possible cause if result is not obtained |
|---|---|---|---|---|
| 21 | BLU | Under all conditions | Check for continuity between the No. 21 terminal and PCM connector A (44P) No. 29 terminal: There should be continuity. | An open in the wire |
| | | | Check for continuity between the No. 21 terminal and body ground: There should be no continuity. | A short to ground in the wire |
| 6 | LT GRN | Disconnect the right power mirror connector 14P | Check for continuity between the No. 6 terminal and right power mirror connector 14P No. 4 terminal: There should be continuity. | An open in the wire |
| | | | Check for continuity between the No. 6 terminal and body ground: There should be no continuity. | A short to ground in the wire |
| 7 | WHT | Disconnect the right power mirror connector 14P | Check for continuity between the No. 7 terminal and right power mirror connector 14P No. 5 terminal: There should be continuity. | An open in the wire |
| | | | Check for continuity between the No. 7 terminal and body ground: There should be no continuity. | A short to ground in the wire |
| 19 | YEL | Disconnect the right power mirror connector 14P | Check for continuity between the No. 19 terminal and right power mirror connector 14P No. 2 terminal: There should be continuity. | An open in the wire |
| | | | Check for continuity between the No. 19 terminal and body ground: There should be no continuity. | A short to ground in the wire |
| 20 | BRN | Disconnect the right power mirror connector 14P | Check for continuity between the No. 20 terminal and right power mirror connector 14P No. 3 terminal: There should be continuity. | An open in the wire |
| | | | Check for continuity between the No. 19 terminal and body ground: There should be no continuity. | A short to ground in the wire |

Protected by AR



## Power Mirror Actuator Test

1. Remove the door panel (see page 20-6).

2. Disconnect the 8P (or 14P) connector (A) from the power mirror actuator (B).

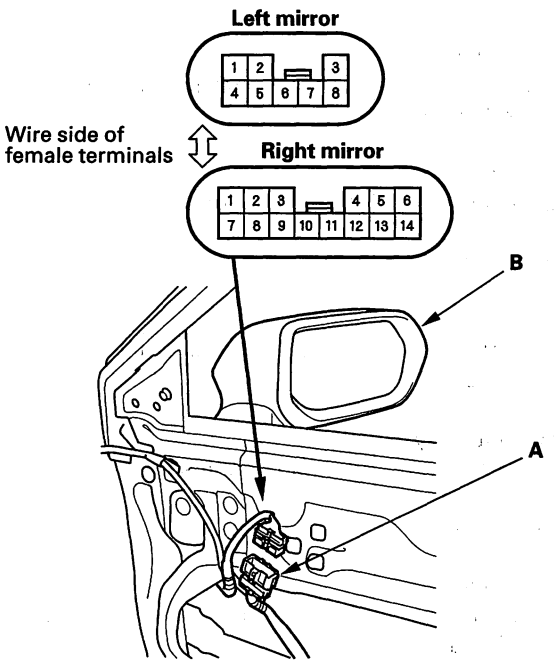


3. Check actuator operation by connecting power and ground according to the table.

| Position \ Terminal | 7 [11] | 6 [12] | 5 [13] |
|---|---|---|---|
| TILT UP | ⊕ | ⊖ | |
| TILT DOWN | ⊖ | ⊕ | |
| SWING LEFT | | ⊕ | ⊖ |
| SWING RIGHT | | ⊖ | ⊕ |

[ ] : **Right mirror**

4. If the mirror fails to work properly, replace the mirror actuator.

**Defogger Test**

5. Check for continuity between the No. 1 [9] and No. 4 [8] terminals of the 8P [14] connector. These should be continuity.
   [ ] : Right mirror

6. If the continuity is not as specified, check for:

   - An open in the wire.
   - A faulty mirror holder.



BACK

Protected by AR



## Power Mirror Switch Test/Replacement

1. Remove the driver's switch panel (see page 20-102).

2. Disconnect the 13P connector from the power mirror switch (A).

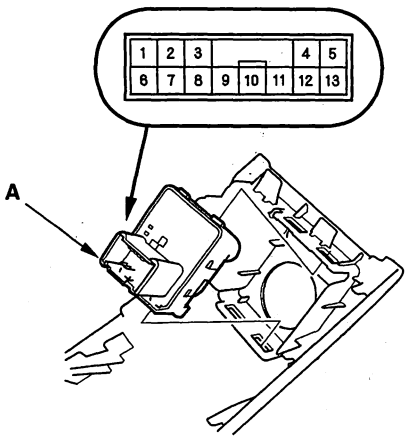


3. Check for continuity between the terminals in each switch position according to the table.

| Position \ Terminal | | 2 | 5 | 6 | 10 | 11 | 12 | 13 |
|---|---|---|---|---|---|---|---|---|
| L | UP | ○ | ○ | ○ | ○ | | ○ | |
| | DOWN | ○ | ○ | ○ | ○ | | ○ | |
| | LEFT | ○ | ○ | ○ | ○ | | ○ | |
| | RIGHT | ○ | ○ | ○ | ○ | | ○ | |
| R | UP | ○ | ○ | ○ | | ○ | | ○ |
| | DOWN | ○ | ○ | ○ | | ○ | | ○ |
| | LEFT | ○ | ○ | ○ | | ○ | | ○ |
| | RIGHT | ○ | ○ | ○ | | ○ | | ○ |

4. If the continuity is not as specified, remove the screws and replace the switch.

Protected by AR



## Power Mirror Actuator Replacement

1. Remove the mirror holder (see page 20-33).
2. Remove the visor (see page 22-191).
3. Remove the power mirror (see page 20-32).
4. Disconnect the 8P (left side) or 14P (right side) connector from the mirror.
5. Remove the three TORX screws using a tamper-proof T10 TORX bit, then remove the actuator (A).

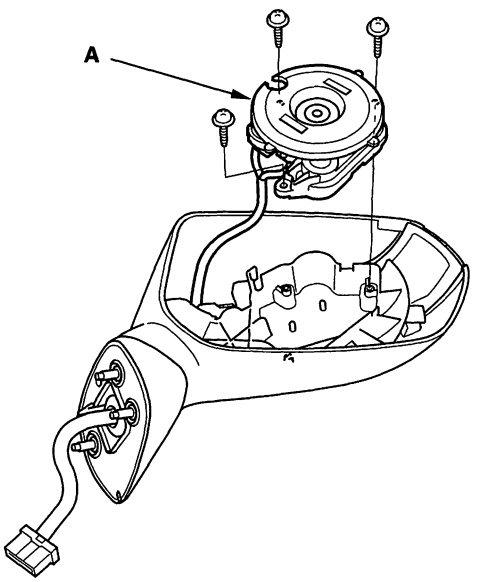


6. Disconnect the 8P (left side) or 14P (right side) connector from the mirror.
7. Remove the connectors (A) and (B) (right side), then remove the screw and separate the harness (C) from the power mirror.

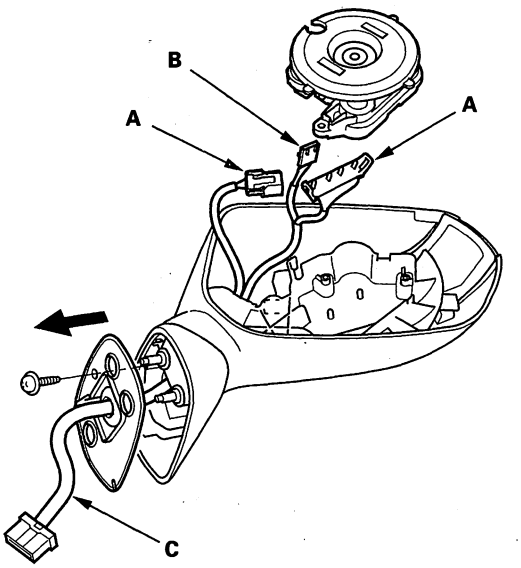


8. Route the wire harness of the new actuator through the hole in the bracket and the gasket.
9. Install the actuator, the harness clip, and the gasket in the reverse order of removal.



BACK

Protected by AR



# Seat Heaters

## Component Location Index

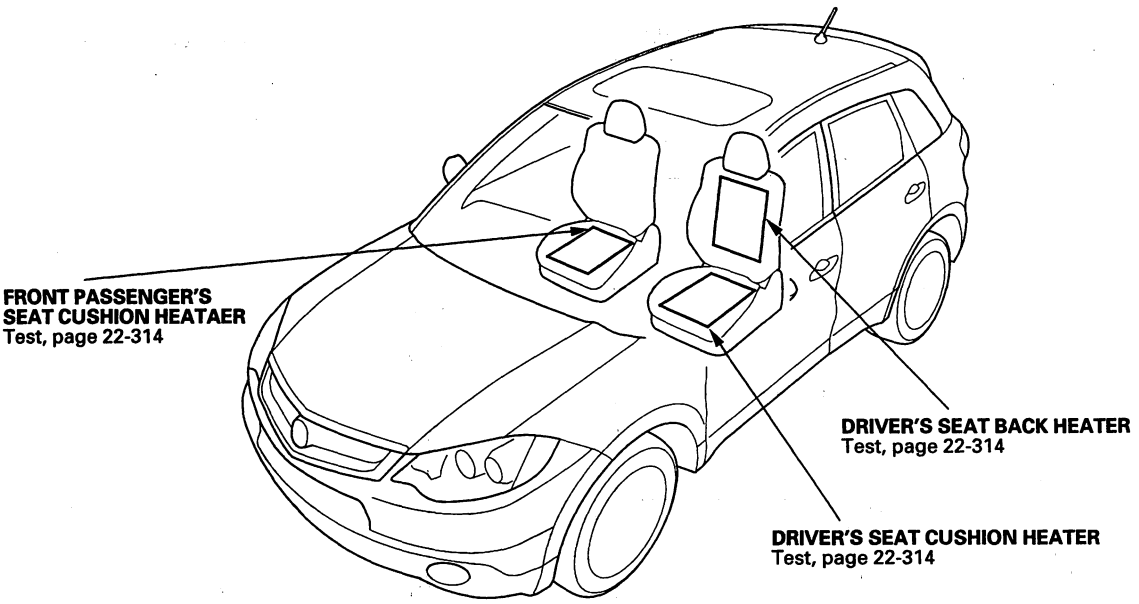


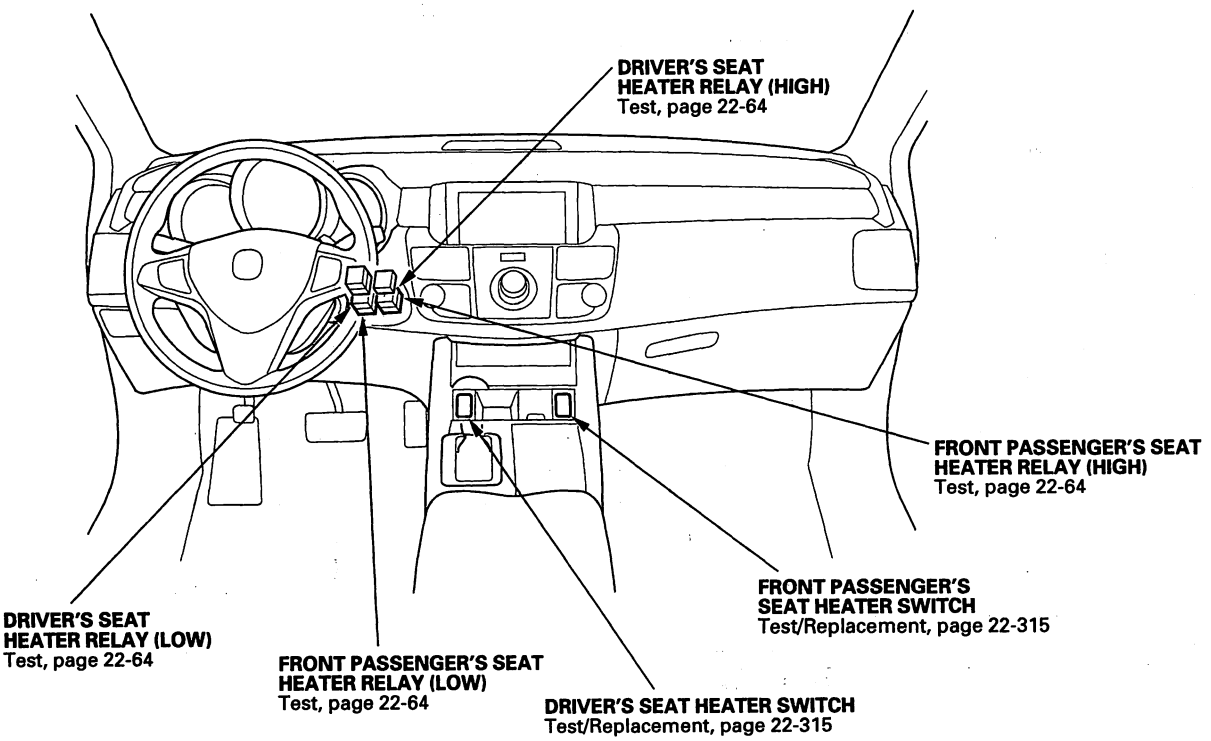

Protected by AR

# Seat Heaters

## Circuit Diagram

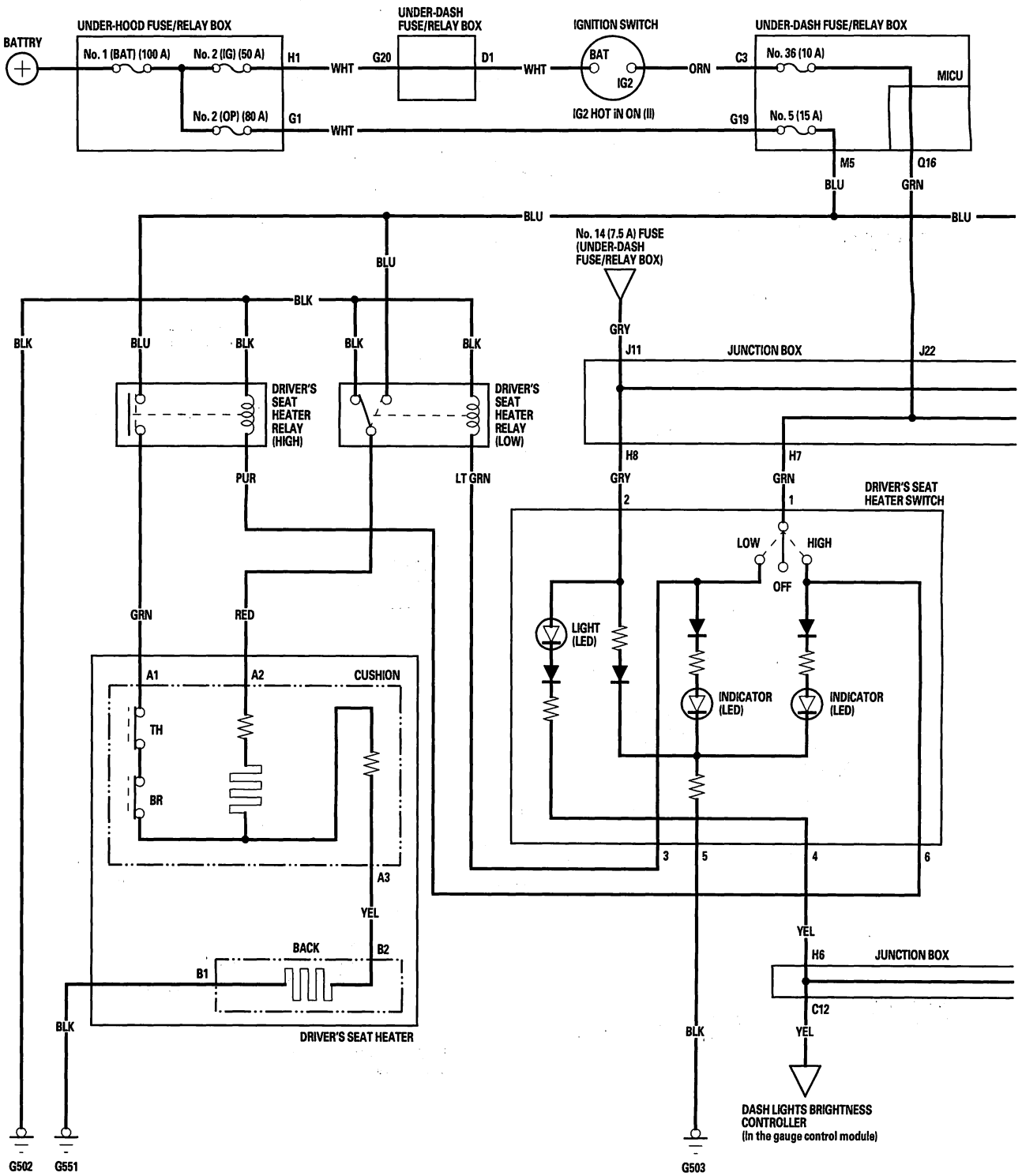




BACK

Protected by AR



TH : THERMOSTAT [ON : 77-95 °F (25-35 °C) ]
[OFF : 97-111 °F (36-44 °C) ]
BR : BREAKER [ON : 77-95 °F (25-35 °C) ]
[OFF : 115-130 °F (46-54 °C) ]

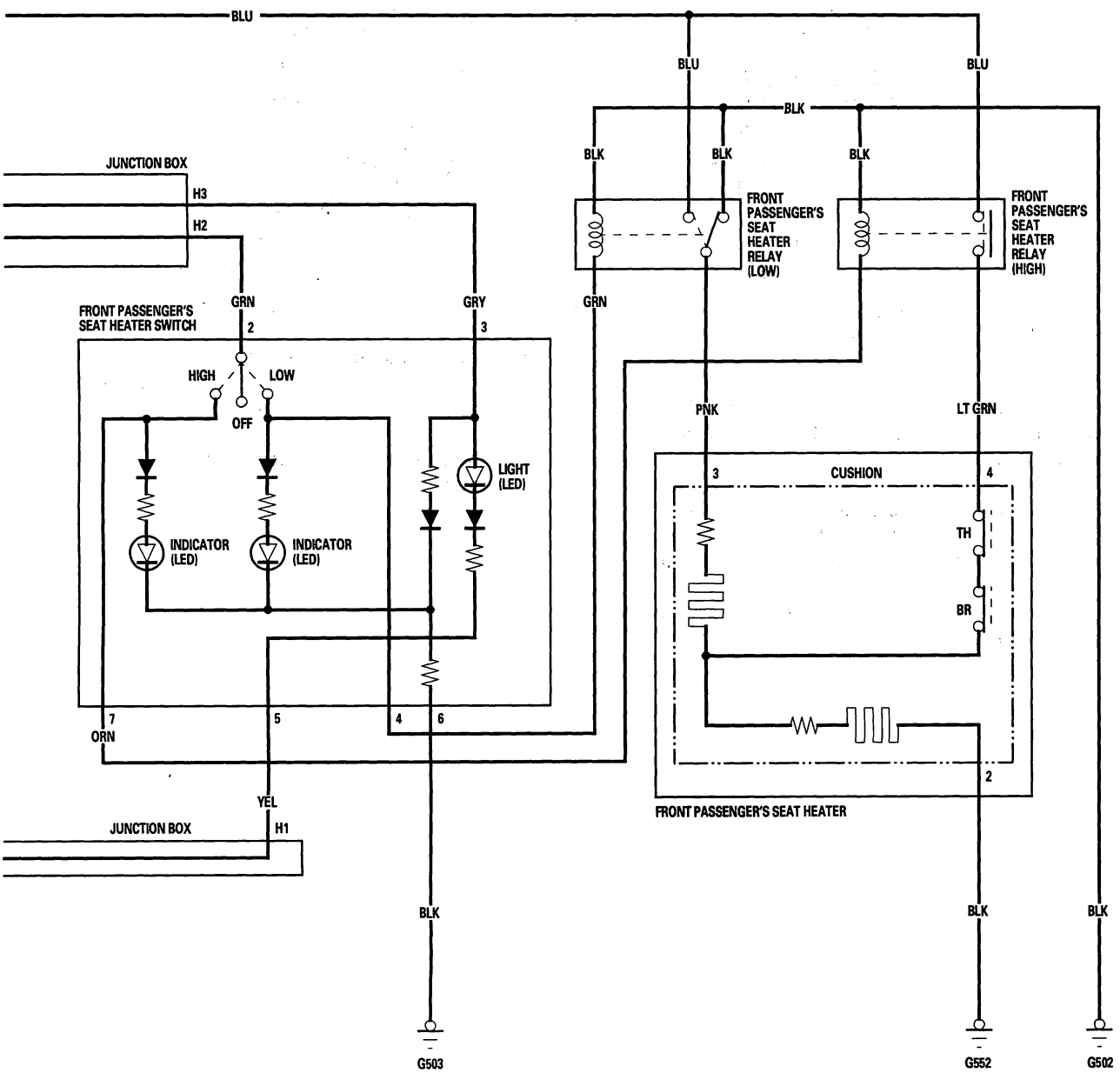

Protected by AR



## Seat Heater Test

### Driver's Seat

1. Remove the driver's seat (see page 20-118).
2. Disconnect the 3P connector (A) and 2P connector (B) from the seat heater.

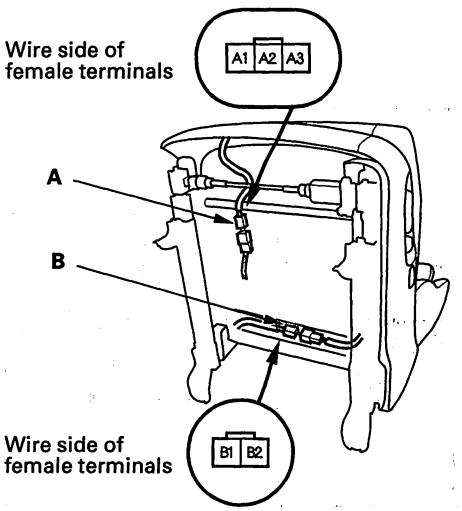


3. Check for continuity between the B1 and B2 terminals of the seat-back heater 2P connector. There should be continuity.
4. Check for continuity between the A1 and A2 terminals, and the A1 and A3 terminals of the seat-cushion 3P connector. There should be continuity.
5. If the continuity is not as specified, replace the appropriate seat heater.

### Front Passenger's Seat

1. Remove the passenger's seat (see page 20-118).
2. Disconnect the 4P connector (A) from the seat heater.

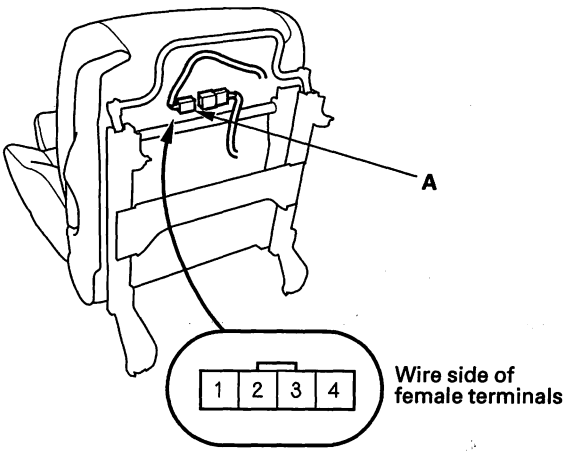


3. Check for continuity between the No. 2 and No. 4 terminals, and No. 3 and No. 2 terminals of the 4P connector. There should be continuity.
4. If the continuity is not as specified, replace the seat heater.



BACK

Protected by AR



## Switch Test/Replacement

1. Remove the center console front panel (see page 20-92).

2. Disconnect the 6P (or 7P*) connector from the seat heater switch (A), then remove the switch.
   * : Front passenger's

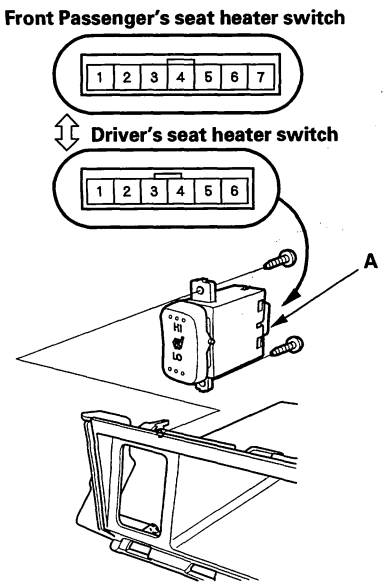


3. Check for continuity between the terminals in each switch position according to the table.

| Position \ Terminal | | 1 [2] | 2 [3] | 3 [4] | | 4 [5] | 5 [6] | 6 [7] |
|---|---|---|---|---|---|---|---|---|
| ON | HIGH | ○ | | | | | | ○ |
| | | ○ | | | ▶ ⊗ ⊗ ▶ | | ○ | |
| | | | ○ | | ⊗ ▶ ▶ | ○ | | |
| | | | ○ | | ▶ ▶ | | ○ | |
| | LOW | ○ | | ○ | | | | |
| | | ○ | | | ▶ ⊗ ⊗ ▶ | | ○ | |
| | | | ○ | | ⊗ ▶ ▶ | ○ | | |
| | | | ○ | | ▶ ▶ | | ○ | |
| OFF | | | ○ | | ⊗ ▶ ▶ | ○ | | |
| | | | ○ | | ▶ ▶ | | ○ | |

[ ] : Front passenger's seat heater switch

4. If the continuity check is not as specified, replace the switch.

Protected by AR

# Power Lumbar Support

## Component Location Index

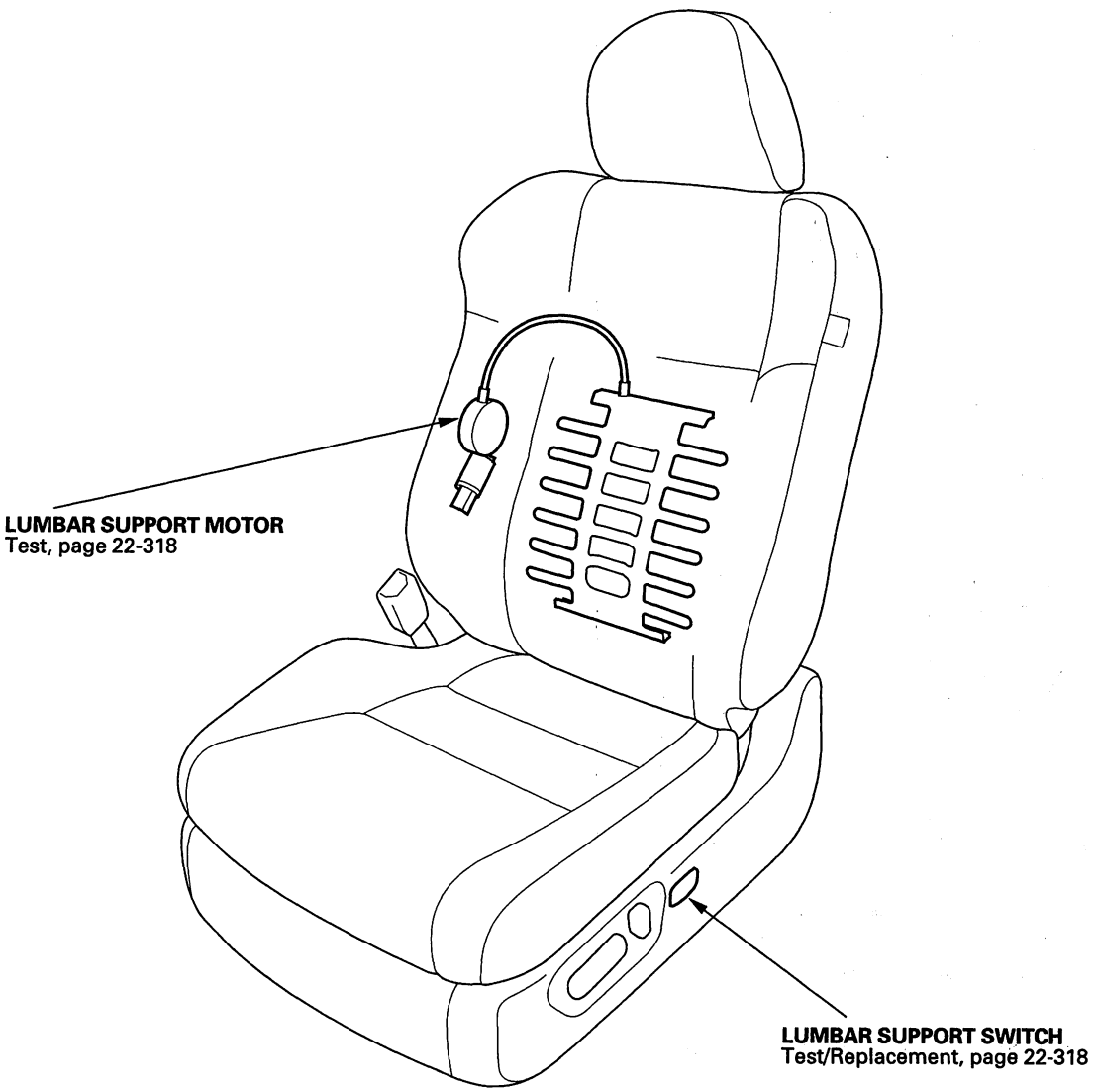




BACK

Protected by AR



## Circuit Diagram

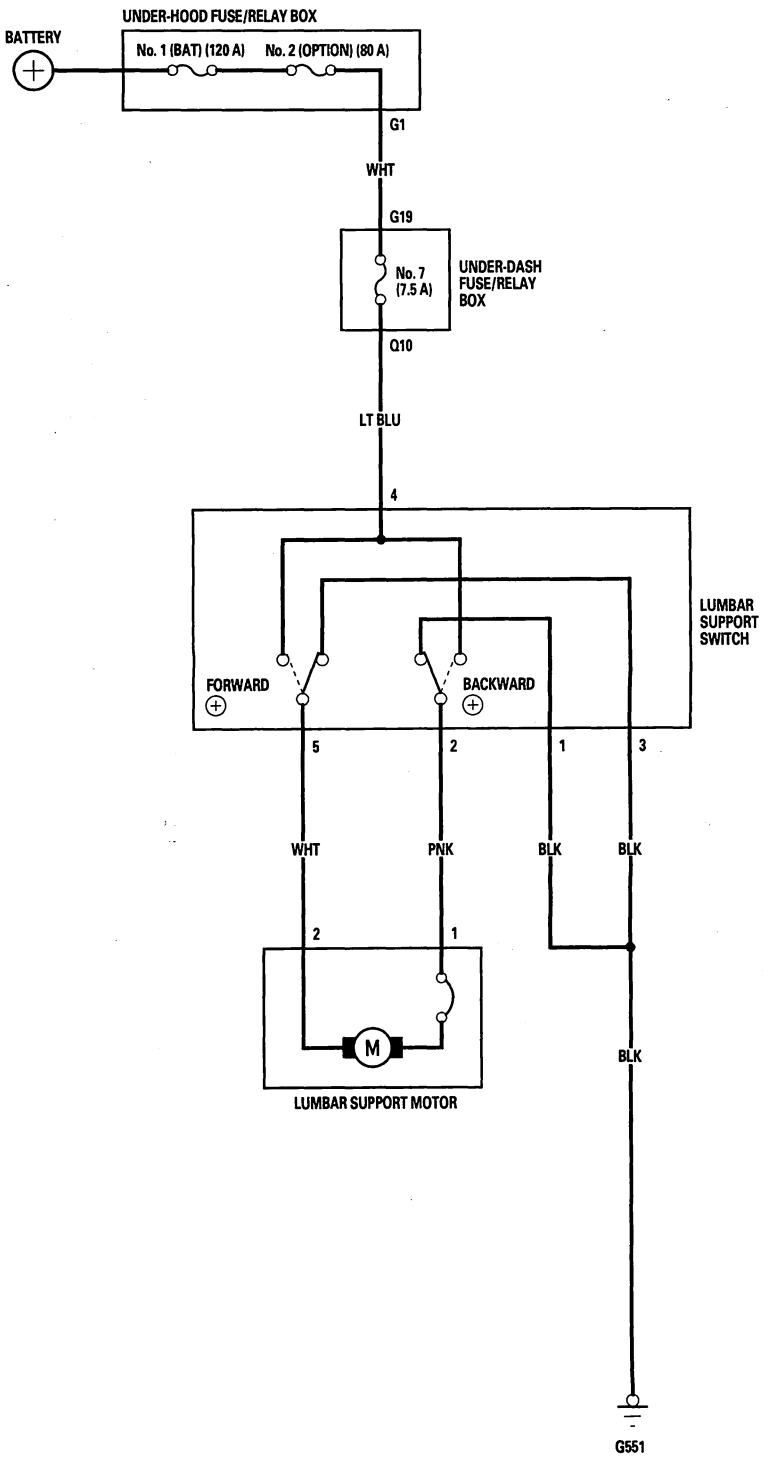

Protected by AR

# Power Lumbar Support

## Switch Test/Replacement

1. Separate the lumbar support switch cover (A) from the switch (B).

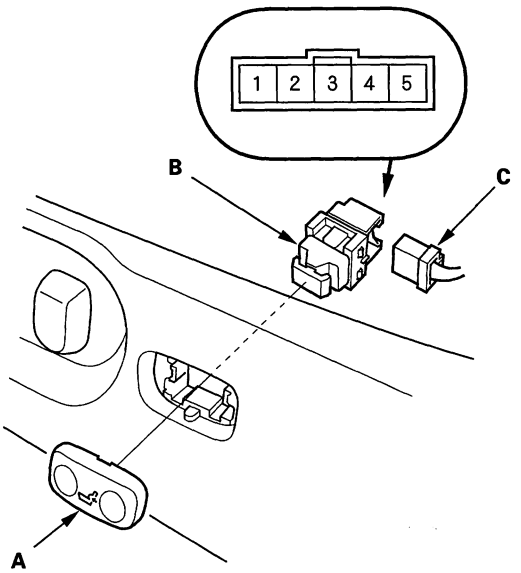


2. Disconnect the 5P connector (C) from the switch.
3. Check for continuity between the terminals in each switch position according to the table.

| Position \ Terminal | 1 | 2 | 3 | 4 | 5 |
|---|---|---|---|---|---|
| Forward | ○ | ○ | | ○ | ○ |
| Backward | | ○ | ○ | ○ | ○ |

4. If the continuity is not as specified, replace the switch.

## Motor Test

1. Remove the driver's seat (see page 20-118).
2. Disconnect the 2P connector (A) from the lumbar support motor.

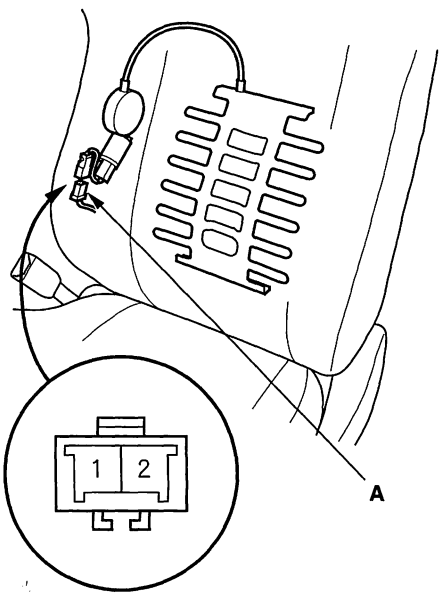


3. Test each motor by applying battery voltage and body ground to the terminals.

| Position \ Terminal | 2 | 1 |
|---|---|---|
| Forward | ⊕ | ⊖ |
| Backward | ⊖ | ⊕ |

4. If the motor does not run or fails to run smoothly, replace it (see page 20-121).



BACK

Protected by AR



## Component Location Index

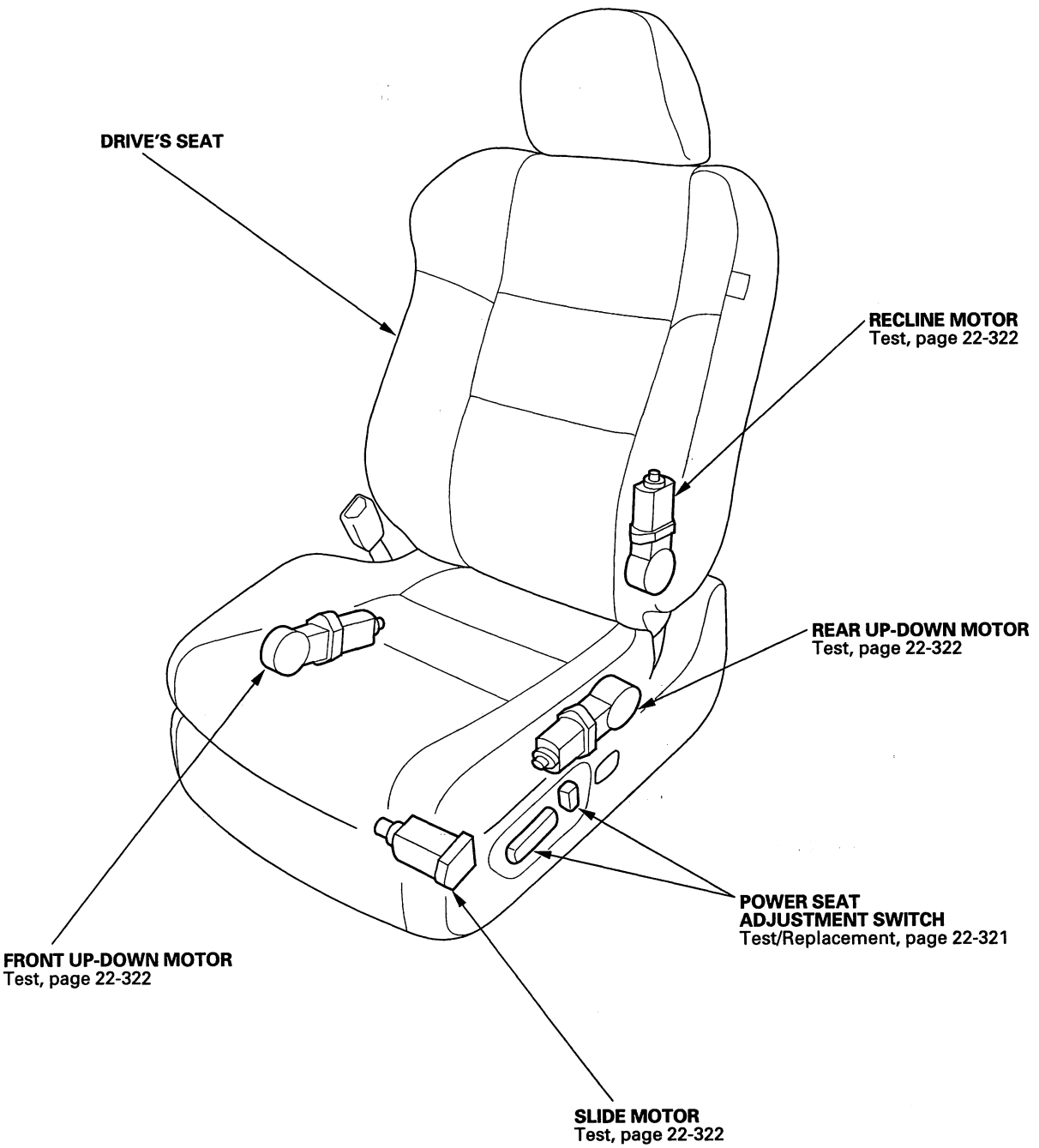

Protected by AR

# Power Seats

## Circuit Diagram

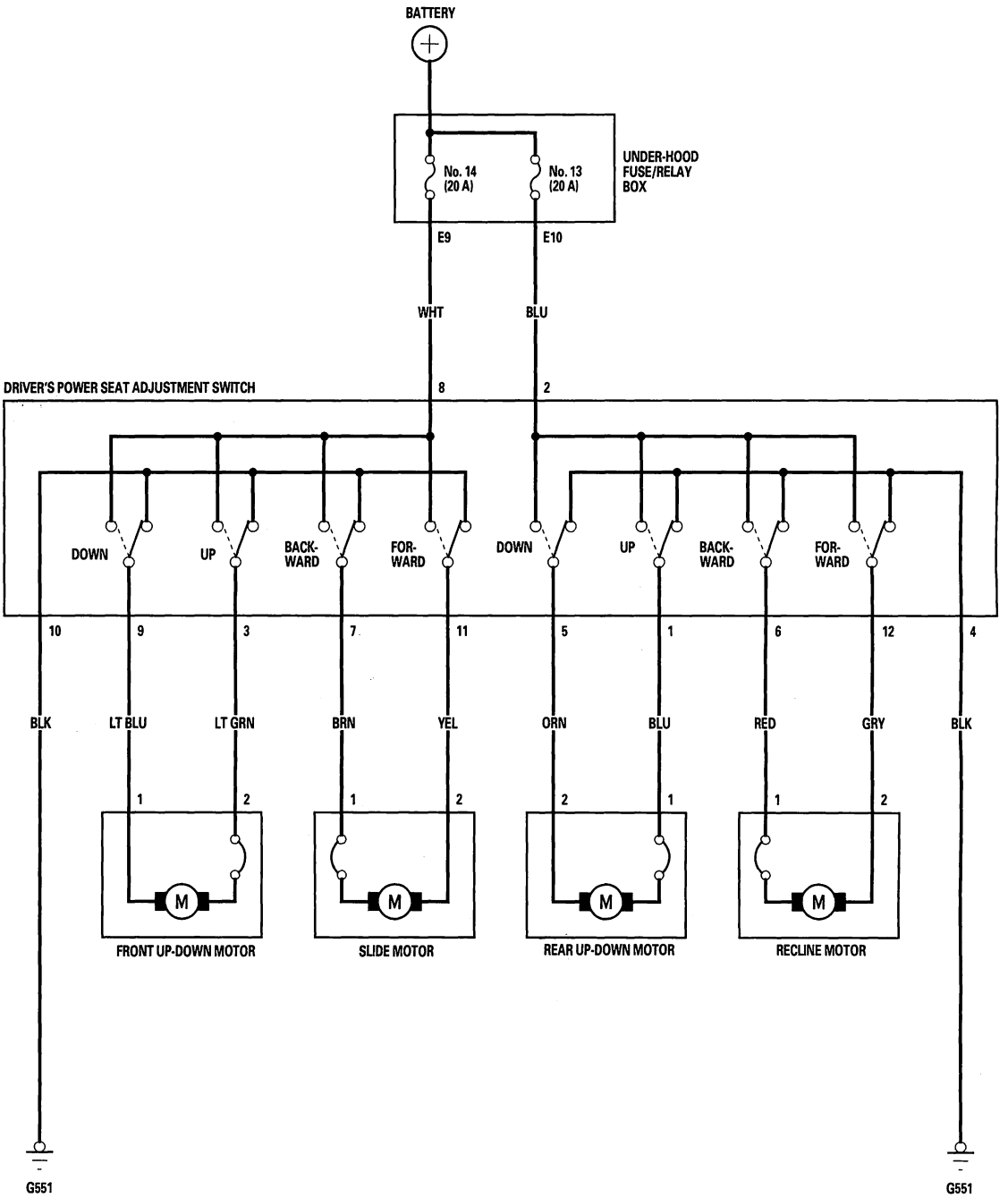




BACK

Protected by AR



## Power Seat Adjustment Switch Test/Replacement

1. Remove the power seat adjustment switch knobs (A) and the recline cover from the driver's power seat (see page 20-131), then remove the two screws and the power seat adjustment switch (B).

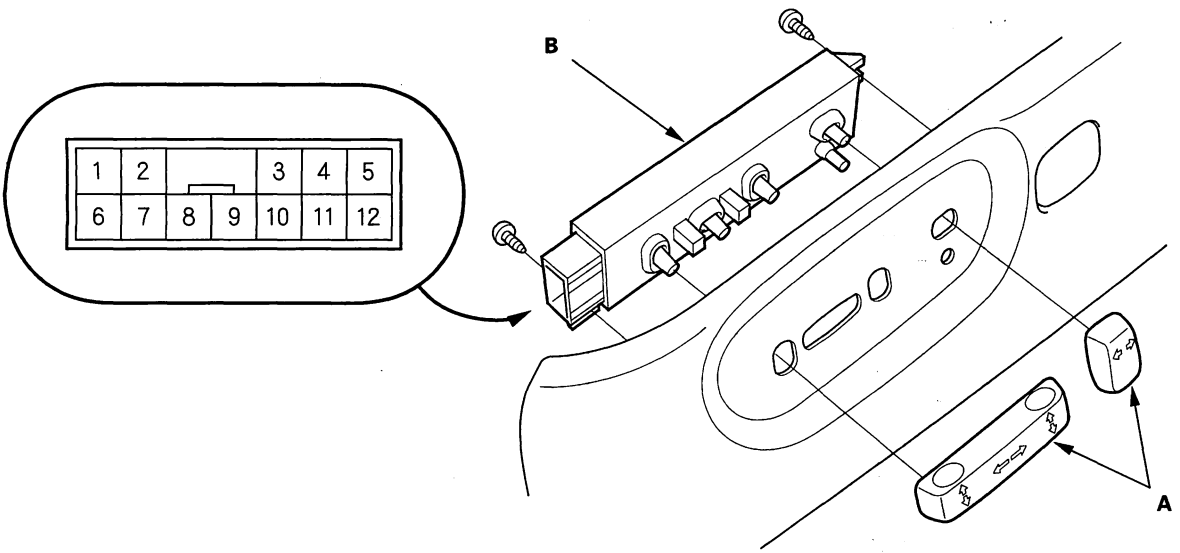


2. Disconnect the 12P connector from the power seat adjustment switch.

3. Reinstall the adjustment switch knobs to the switch.

4. Check for continuity between the terminals in each switch position according to the table.

| Position \ Terminal | | 1 | 2 | 3 | 4 | 5 | 6 | 7 | 8 | 9 | 10 | 11 | 12 |
|---|---|---|---|---|---|---|---|---|---|---|---|---|---|
| SLIDE SWITCH | Forward | | | | | | | ○ | ○ | ○ | ○ | ○ | |
| | Backward | | | | | | | ○ | ○ | | ○ | ○ | |
| RECLINE SWITCH | Forward | | ○ | | ○ | | ○ | | | | | | ○ |
| | Backward | | ○ | | ○ | | ○ | | | | | | ○ |
| FRONT UP-DOWN SWITCH | UP | | | ○ | | | | | ○ | ○ | ○ | | |
| | DOWN | | | ○ | | | | | ○ | ○ | ○ | | |
| REAR UP-DOWN SWITCH | UP | ○ | ○ | | ○ | ○ | | | | | | | |
| | DOWN | ○ | ○ | | ○ | ○ | | | | | | | |

5. If the continuity is not as specified, replace the switch.

Protected by AR



## Motor Test

1. Remove the driver's seat (see page 20-118).
2. Remove the power seat adjustment switch knobs and the recline cover from the seat (see page 20-131).
3. Disconnect the 12P connector (A) from the power seat adjustment switch (B).

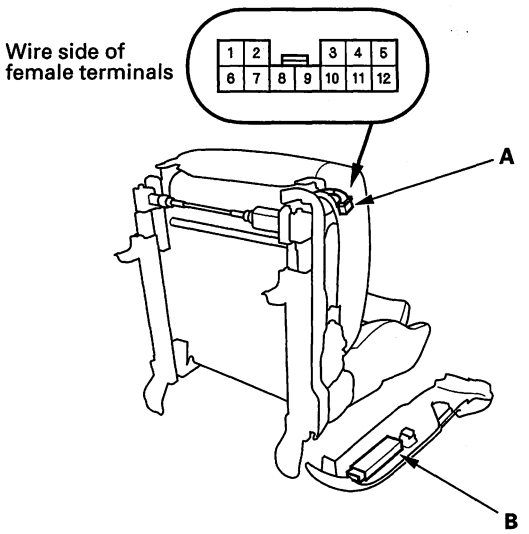


4. Test each motor by applying battery voltage and body ground to the 12P connector terminals.

**Slide motor**

| Terminal / Position | 7 | 11 |
|---|---|---|
| Forward | ⊖ | ⊕ |
| Backward | ⊕ | ⊖ |

**Recline motor**

| Terminal / Position | 6 | 12 |
|---|---|---|
| Forward | ⊖ | ⊕ |
| Backward | ⊕ | ⊖ |

**Front up-down motor**

| Terminal / Position | 3 | 9 |
|---|---|---|
| UP | ⊕ | ⊖ |
| DOWN | ⊖ | ⊕ |

**Rear up-down motor**

| Terminal / Position | 1 | 5 |
|---|---|---|
| UP | ⊕ | ⊖ |
| DOWN | ⊖ | ⊕ |

5. If the motor does not run or fails to run smoothly, check for an open in the driver's seat wire harness and driver's seat subharness. If the harness is OK, replace the motor (see page 20-121).



BACK

Protected by AR



# Rear Window Defogger

## Component Location Index

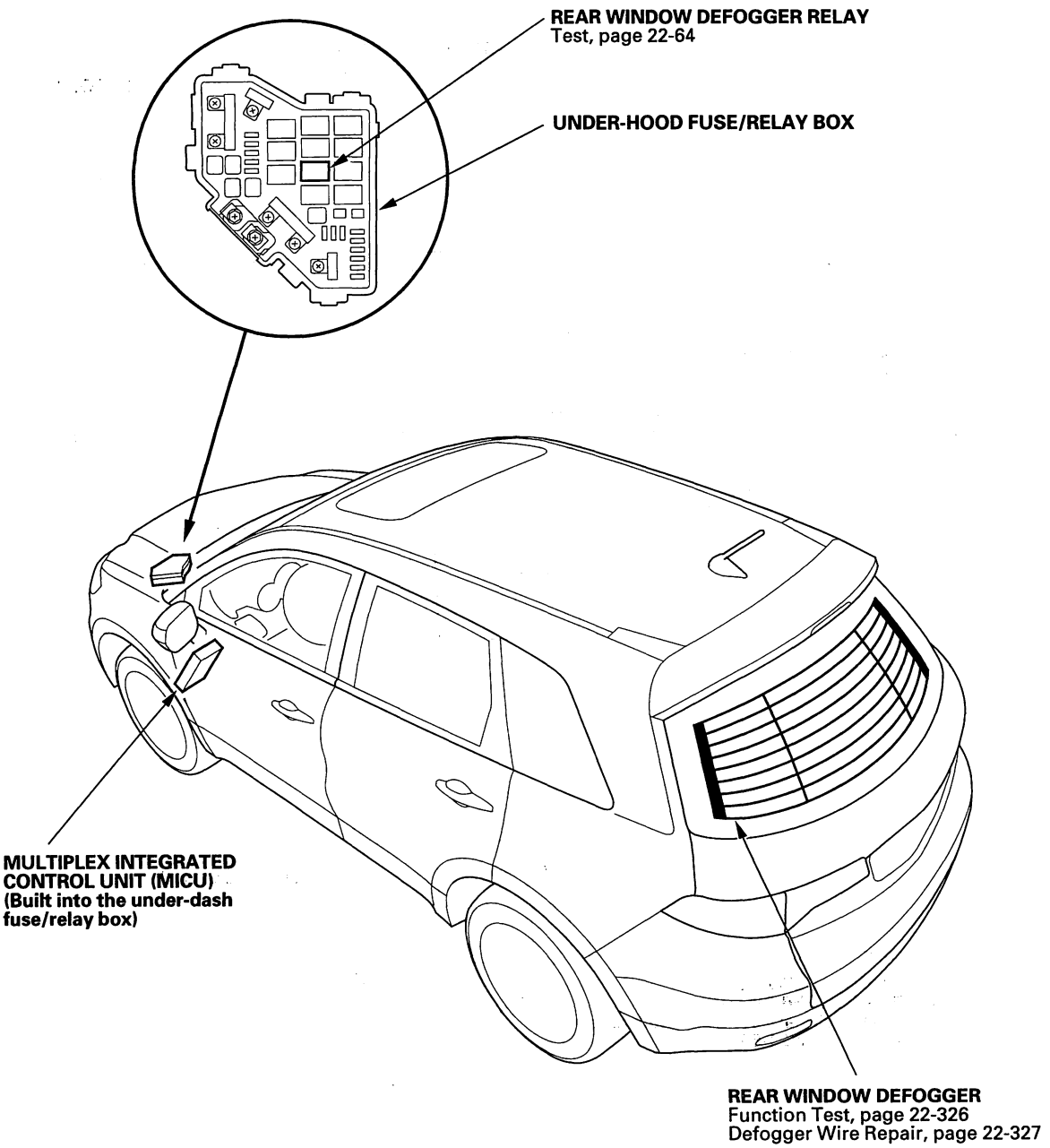


(cont'd)

Protected by AR

# Rear Window Defogger

## Component Location Index (cont'd)

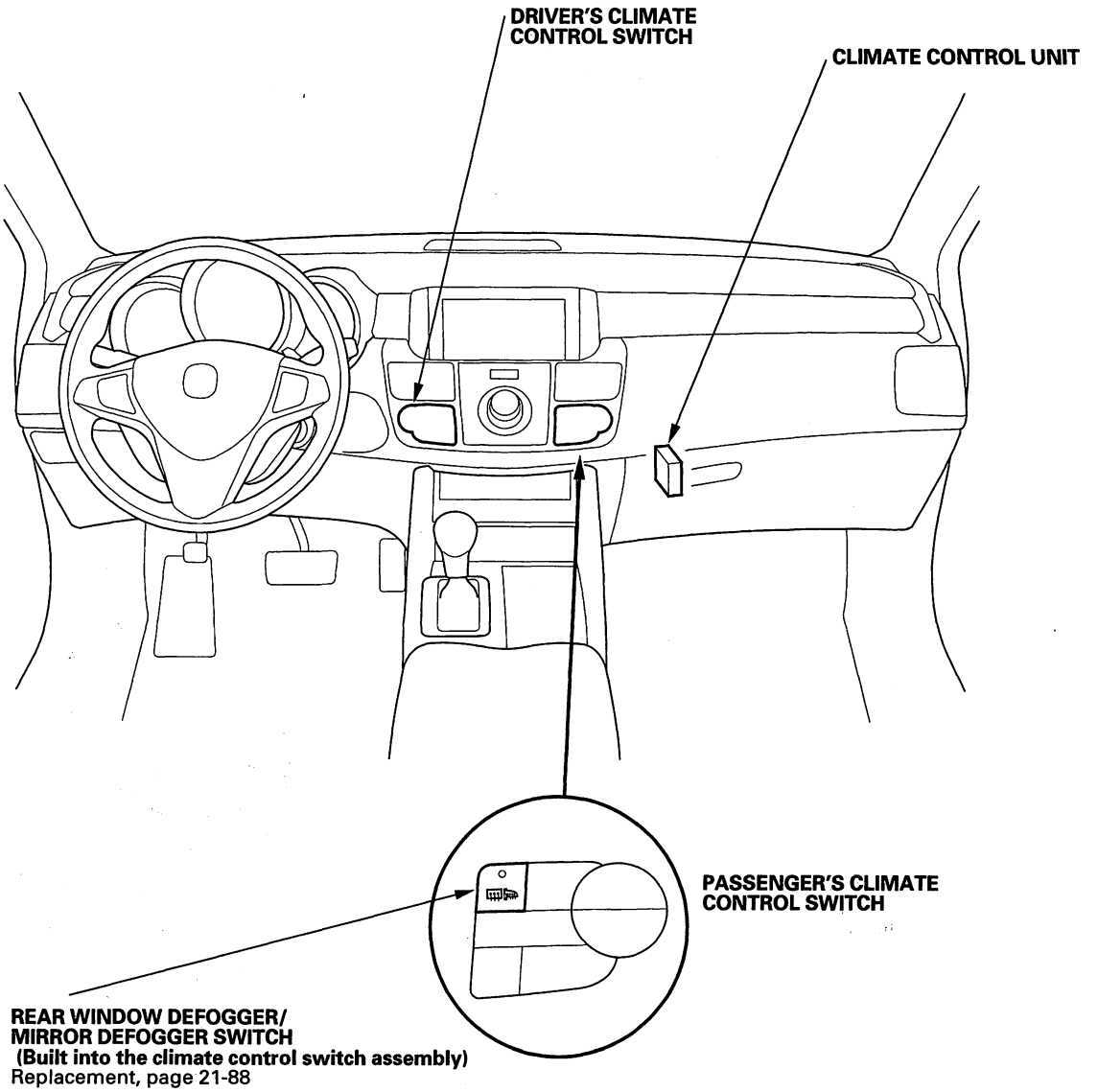




BACK

Protected by AR



## Circuit Diagram

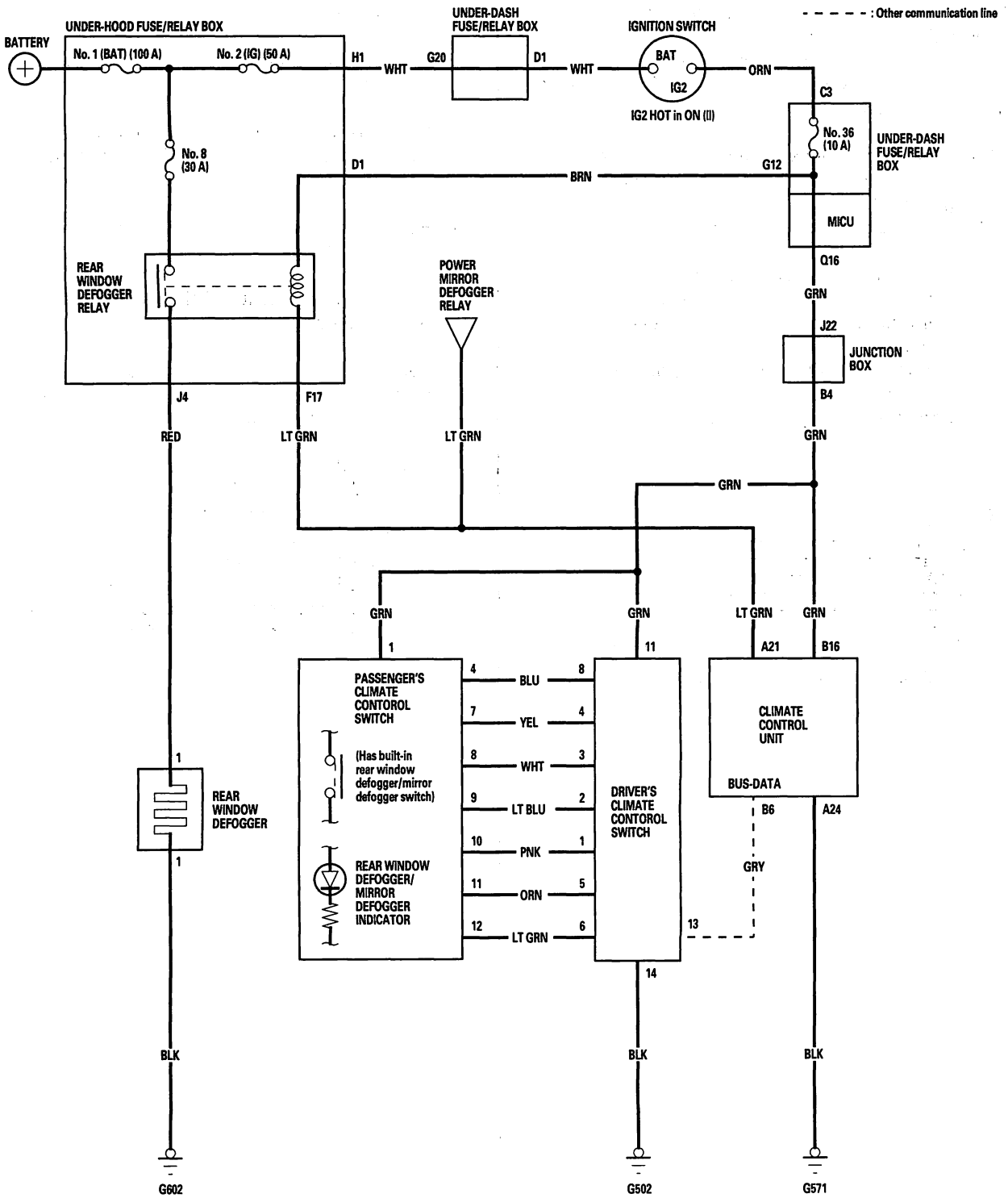

Protected by AR

# Rear Window Defogger

## Function Test

NOTE:
- Be careful not to scratch or damage the defogger wires with the tester probe.
- Before testing, check the No. 8 (30 A) fuse in the under-hood fuse/relay box and the No. 36 (10 A) fuse in the under-dash fuse/relay box.

1. Check for voltage between the positive terminal (A) and body ground with the ignition switch and the defogger switch ON.
   There should be battery voltage.

   - If there is no voltage, check for:
     – Faulty rear window defogger relay.
     – Faulty climate control unit/climate control switches.
     – An open in the RED wire to the positive terminal.
   - If there is voltage, go to step 2.

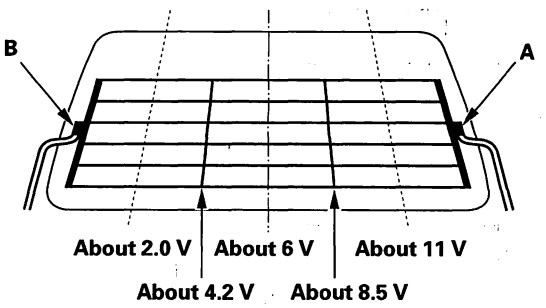


2. Disconnect the negative terminal (B) from the rear window defogger.

3. Check for continuity between the negative terminal and body ground.

   If there is no continuity, check for an open in the wire or poor ground (G602). If there is continuity, go to step 4.

4. Reconnect the negative terminal to the rear window defogger.

5. Turn the ignition switch ON (II) and the rear window defogger switch ON.

6. Touch the voltmeter positive probe to each point on each defogger wire, and the negative probe to the negative terminal.

   - If the voltage is as specified, the defogger wire up to that point is OK.
   - If the voltage is not as specified, repair the defogger wire.
     – If it is more than specified at one of the points, there is a break in the negative half of the wire.
     – If it is less than specified at one of the points, there is a break in the positive half of the wire.



BACK

Protected by AR



## Defogger Wire Repair

NOTE: To make an effective repair, the broken section must be no longer than 1 inch (2.5 mm).

1. Lightly rub the area around the broken section (A) with fine steel wool, then clean it with isopropyl alcohol.

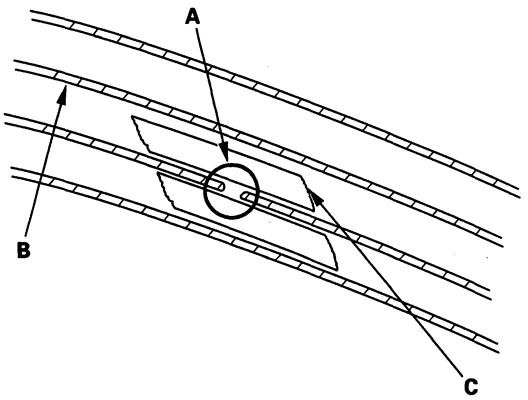


2. Carefully mask above and below the broken portion of the defogger wire (B) with cellophane tape (C).

3. Using a small brush, apply a heavy coat of silver conductive paint (commercially available) (A) extending about 1/8" on both sides of the break. Allow 25 minutes to dry.

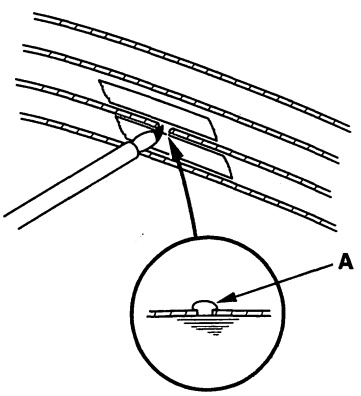


4. Do the function test to confirm that the wire is repaired (see page 22-326).

5. Apply a second coat of paint in the same way. Let it dry 3 hours before removing the tape.

Protected by AR

# Immobilizer System

## Component Location Index

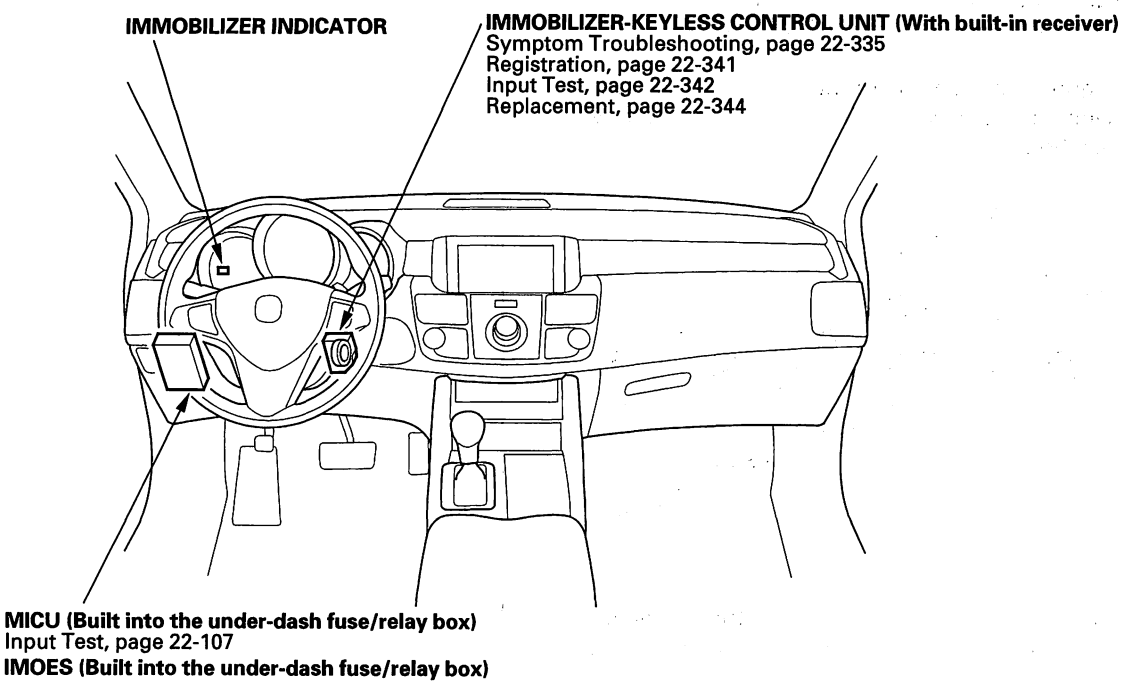


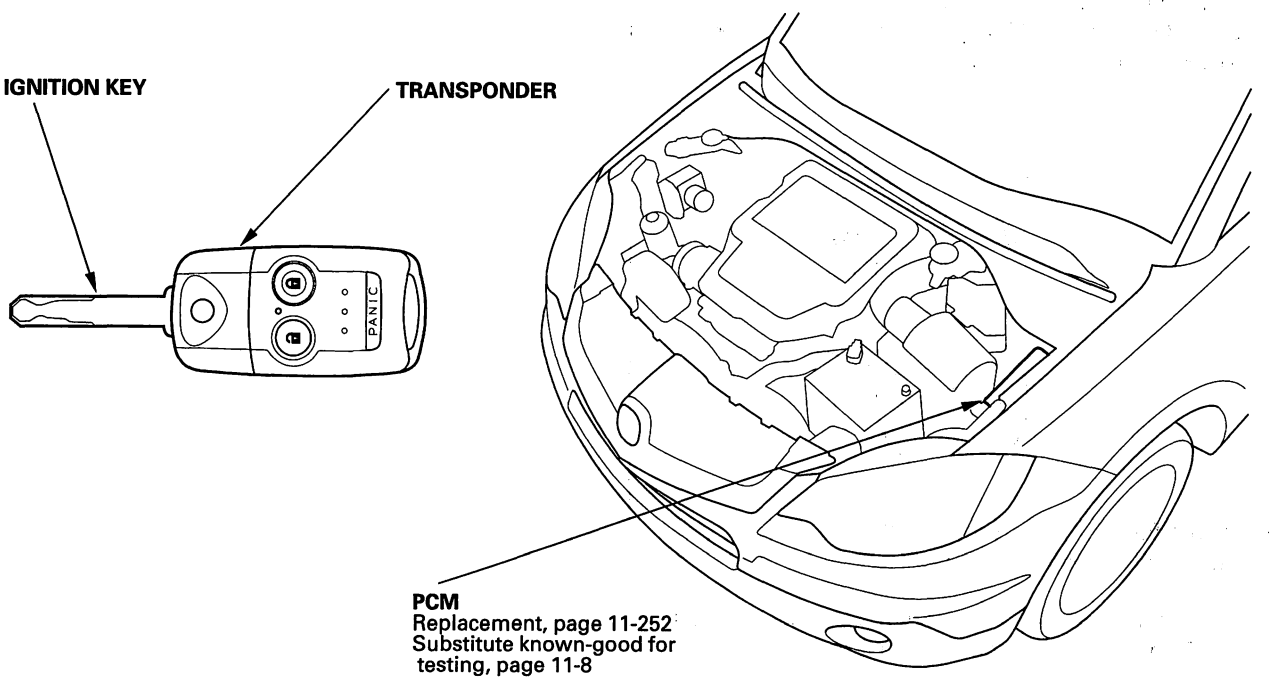




BACK

Protected by AR



## System Description

The vehicle is equipped with an immobilizer system that will disable the vehicle unless a programmed ignition key is used.
This system consists of a transponder, a keyless transmitter, immobilizer-keyless control unit, immobilizer indicator, IMOES unit (built into the MICU), and the PCM.
When the immobilizer key (programmed by the HDS) is inserted into the ignition switch and turned to the ON (II) position, the immobilizer-keyless control unit sends power to the transponder in the ignition key. The transponder then sends a coded signal back to the immobilizer-keyless control unit which then sends a coded signal to the IMOES unit, which confirms the code and signals the PCM to supply power to the fuel pump circuit.

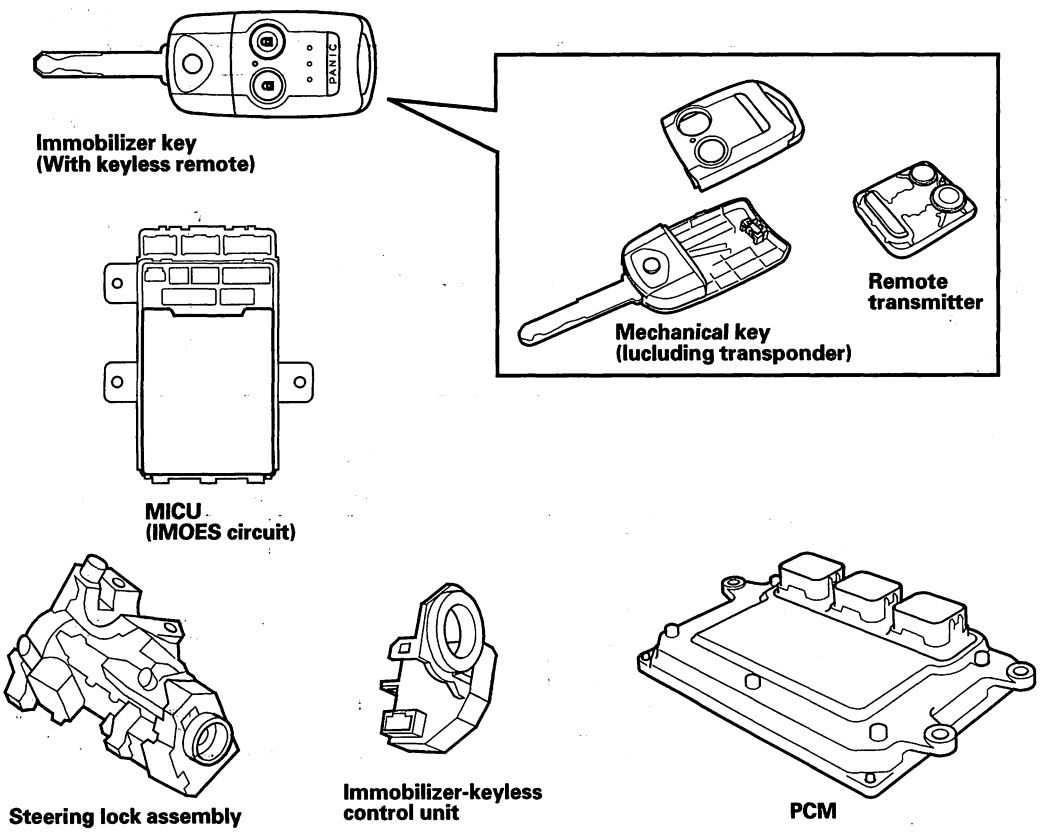


If the wrong key has been used or the code was not received or recognized by the unit, the indicator will quickly flash once, then it will blink until the ignition switch is turned OFF. When the ignition switch is turned OFF, the indicator will blink ten times to signal that the unit has reset correctly, then the indicator will go off.

Protected by AR

# Immobilizer System

## Circuit Diagram

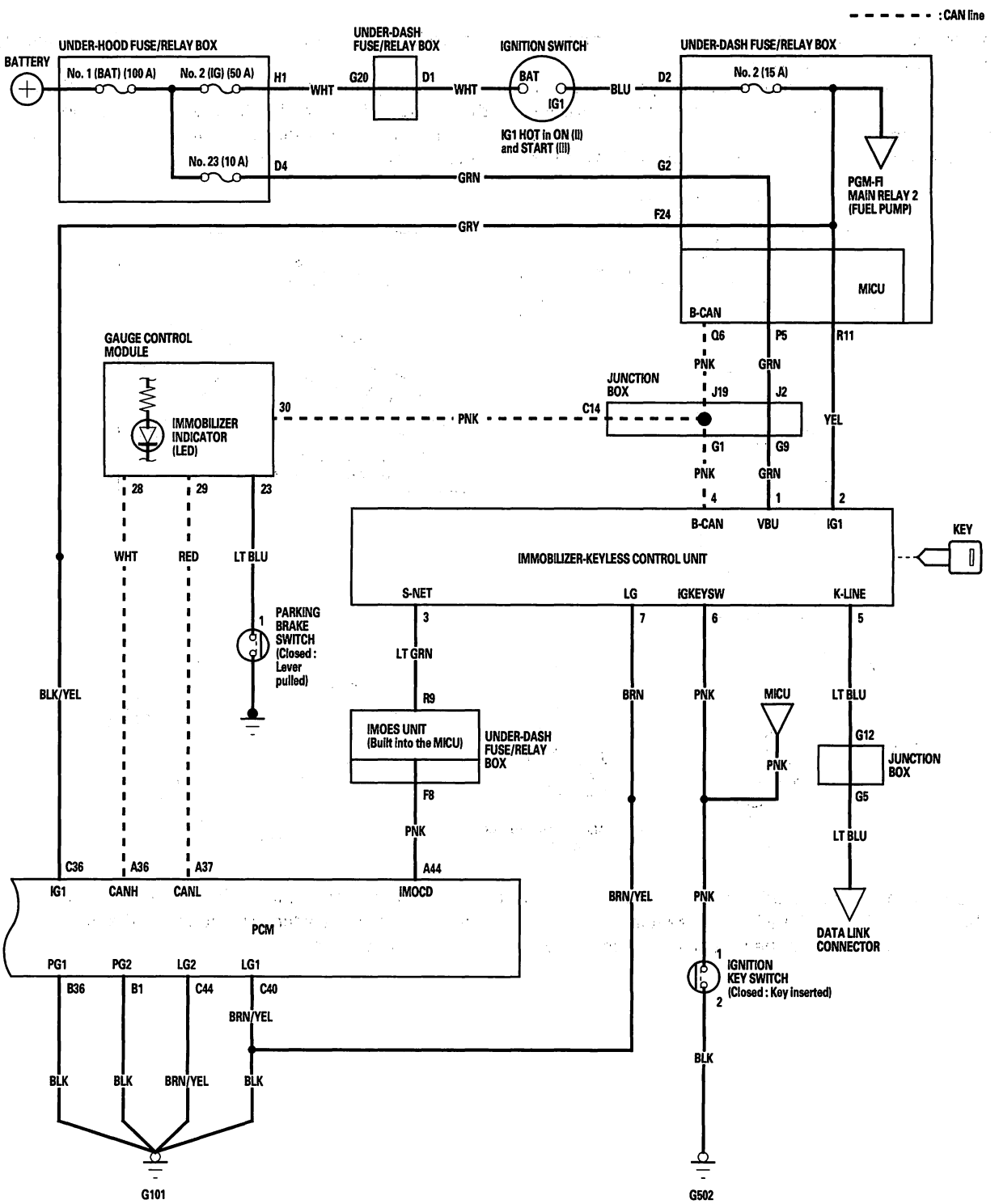




BACK

Protected by AR



## DTC Troubleshooting

### **DTC B1905:** Immobilizer-Keyless Control Unit Lost Communication with MICU (DRLOCKSW Message)

NOTE: If you are troubleshooting multiple DTCs, be sure to follow the instructions in B-CAN System Diagnosis Test Mode A (see page 22-88).

1. Clear the DTCs with the HDS.

2. Turn the ignition switch OFF, and then back ON (II).

3. Check for DTCs with the HDS.

   *Is DTC B1905 indicated?*

   **YES**—Go to step 4.

   **NO**—Intermittent failure, the system is OK at this time. Check for loose or poor connections at the immobilizer-keyless control unit 7P connector, and the under-dash fuse/relay box connector Q (16P).■

4. Check for DTCs with the HDS.

   *Is DTC B1160 also indicated with DTC B1905?*

   **YES**—Faulty MICU; replace the under-dash fuse/relay box.■

   **NO**—Replace the immobilizer-keyless control unit.■

Protected by AR



## DTC Troubleshooting (cont'd)

### DTC B1906: Immobilizer-Keyless Control Unit Lost Communication with Gauge Control Module (A/T Message)

NOTE: If you are troubleshooting multiple DTCs, be sure to follow the instructions in B-CAN System Diagnosis Test Mode A (see page 22-88).

1. Clear the DTCs with the HDS.
2. Turn the ignition switch OFF, and then back ON (II).
3. Wait for 6 seconds or more.
4. Check for DTCs with the HDS.

   *Is DTC B1906 indicated?*

   **YES**—Go to step 5.

   **NO**—Intermittent failure, the gauge control module is OK at this time. Check for loose or poor connections at the gauge control module 36P connector and at the immobilizer-keyless control unit 7P connector. ■

5. Turn the ignition switch OFF.
6. Connect the HDS to the data link connector, then turn the ignition switch ON (II).
7. Select the BODY ELECTRICAL menu, then enter the UNIT INFORMATION.
8. Check the condition of the gauge control module from the CONNECTED UNIT list.

   *Is NOT AVAILABLE indicated?*

   **YES**—Go to step 9.

   **NO**—Replace the immobilizer-keyless control unit. ■

9. Do the gauge control module input test (see page 22-282).

   *Are all inputs OK?*

   **YES**—Go to step 10.

   **NO**—Repair the faulty input, then recheck the DTCs. ■

10. Disconnect the immobilizer-keyless control unit 7P connector.
11. Disconnect the gauge control module 36P connector.
12. Check for continuity between the immobilizer-keyless control unit 7P connector No. 4 terminal and the gauge control module 36P connector No. 30 terminal.

**IMMOBILIZER-KEYLESS CONTROL UNIT 7P CONNECTOR**
Wire side of female terminals

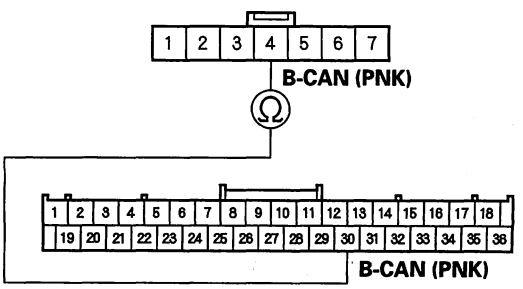


**GAUGE CONTROL MODULE 36P CONNECTOR**
Wire side of female terminals

*Is there continuity?*

**YES**—Replace the gauge control module. ■

**NO**—Repair an open in the wire between the immobilizer-keyless control unit and the gauge control module. ■



BACK

Protected by AR



# Symptom Troubleshooting Information

## General Check before Troubleshooting

Before troubleshooting the immobilizer system, check the following general items and solve any if applicable:

- The battery is low; charge the battery fully, then troubleshoot the immobilizer system.
- The ignition key is not a genuine Honda part; use the Honda-approved key blank, register the key, then troubleshoot the immobilizer system.
- A key ring, keys, or a key case is used; remove the key from it, and troubleshoot the immobilizer system with a key only.
- An aftermarket electrical part is attached; remove it, then troubleshoot the immobilizer system.

## Symptom Troubleshooting Using the Immobilizer Indicator Lighting Pattern

The pattern of the immobilizer indicator light can help troubleshoot the condition of the immobilizer system. Following are descriptions of the four possible patterns.

**Normal operation**
If the immobilizer code is identified, the immobilizer indicator quickly flashes once when the ignition switch is turned ON (II).
The immobilizer indicator does not come on when the ignition switch is turned OFF.

**Immobilizer code is not identified**
If the immobilizer code is not identified, the immobilizer indicator will quickly flash once, then will blink until the ignition switch is turned OFF. When the ignition switch is turned OFF, the indicator will blink ten times, then go off. The state of the immobilizer key registration and the IMOCD line can be checked by doing a SYSTEM CHECK with the HDS (see page 22-6)

**Immobilizer indicator does not come on**
If the immobilizer indicator does not come on after turning the ignition switch ON (II), an open or short in the F-CAN lines between the PCM and the gauge control module. Watch the malfunction indicator lamp (MIL). If the MIL stays on, go to the PGM-FI system troubleshooting (see page 11-228).

**Immobilizer indicator does not go off**
If the immobilizer indicator does not go off after turning the ignition switch ON (II), do the gauge control module self-diagnostic function (see page 22-258). If the indicator drive circuit is OK, do the SYSTEM CHECK with the HDS.

(cont'd)

Protected by AR



## Symptom Troubleshooting Information (cont'd)

### Symptom Troubleshooting Using Malfunctioning Circuit Functions

If a malfunction occurs in the immobilizer circuit, use the table to cross-reference the malfunctioning function to the line(s) that should be checked:

| Line Error / Function | | Immobilizer Indicator | Engine Start | Key Registration | Tester Communication | Keyless Operation |
|---|---|---|---|---|---|---|
| Terminal No. | Cause of Malfunction | | | | | |
| 1 | VBU line open or short | Comes on, then goes off. | Possible | Impossible | Possible | Impossible |
| 2 | IG1 line open or short | Blinking | Impossible | Impossible | Impossible | Possible |
| 3 | S-NET line open or short | Blinking | Impossible | Impossible | Impossible | Possible |
| 4 | B-CAN line open or short | Comes on, then goes off. | Possible | Impossible | Immobilizer: Possible<br>Keyless: Impossible | Impossible |
| 5 | K-LINE line open or short | Comes on, then goes off. | Possible | Impossible | Impossible | Possible |
| 6 | KEYSW line open | Comes on, then goes off. | Possible | Possible | Possible | Possible (in spite of the key is in the ignition switch ) |
| | KEYSW line short to ground | | | | | Impossible |
| 7 | GND (LG) line open | Blinking | Impossible | Impossible | Impossible | Impossible |

### System Check and Status Log

NOTE: The HDS can be used to:
- Check the state of the immobilizer key registration and the IMOCD line by doing a SYSTEM CHECK.

1. Connect the HDS to the data link connector, then turn the ignition switch ON (II) and follow the prompts to the MAIN MENU.

   NOTE: If the HDS does not communicate with the vehicle, go to the DLC circuit troubleshooting (see page 11-229).

2. At the MAIN MENU, enter IMMOBILIZER, then select the IMMOBILIZER SETUP.

3. Do the SYSTEM CHECK. If there is a system check number, do the troubleshooting for the item indicated.

4. Check the status log using the HDS. Troubleshoot the line with the highest counts (see page 22-340). If all the lines are "0" zero, the problem may not be caused by the immobilizer system, check for ignition or fuel problems.

   NOTE: Once repaired, clear the status log by removing the No. 23 (10 A) fuse in the under-hood fuse/relay box or disconnecting the battery.



BACK

Protected by AR



## Symptom Troubleshooting

1. Troubleshoot the immobilizer system by the order of the priority shown:

| Order of Priority | Symptom | Possible cause |
|---|---|---|
| 1 | Immobilizer indicator blinks after the ignition switch is turned OFF. | Symptom troubleshooting (see page 22-336). |
| 2 | Engine does not start with the immobilizer key. | Symptom troubleshooting (see page 22-337). |
| 3 | Immobilizer indicator does not come on. | Check the MIL indication.<br>• If the MIL comes on, go to the PGM-FI System MIL circuit troubleshooting (see page 11-228).<br>• If the MIL does not come on, replace the gauge control module. |
| 4 | Immobilizer indicator does not go off. | Symptom troubleshooting (see page 22-337). |

Protected by AR



## Symptom Troubleshooting (cont'd)

### Immobilizer indicator blinks

NOTE: Before troubleshooting, check the items listed in "General Check before Troubleshooting".

1. Turn the ignition switch OFF.
2. Connect the HDS, then turn the ignition switch ON (II).
3. Enter the IMMOBILIZER, then select the IMMOBILIZER SETUP.
4. Check the SYSTEM CHECK and STATUS LOG information.

   *Is the SYSTEM CHECK indicated?*

   **YES**—Troubleshoot the immobilizer system according to the result of the SYSTEM CHECK/ STATUS LOG (see page 22-333).■

   **NO**—Go to step 5.
5. Turn the ignition switch OFF.
6. Enter the vehicle, and remove the ignition key from the ignition switch, then close the all doors.
7. Operate the keyless transmitter LOCK and UNLOCK several times in the vehicle.

   *Do the door lock actuators work normally?*

   **YES**—Go to step 8.

   **NO**—Check for a poor ground (G101) and/or an open in the wire between the immobilizer-keyless control unit 7P connector No. 7 terminal and body ground (G101).■
8. Turn the ignition switch ON (II).
9. Check for voltage between the immobilizer-keyless control unit 7P connector No. 2 terminal and body ground.

   **IMMOBILIZER-KEYLESS CONTROL UNIT 7P CONNECTOR**

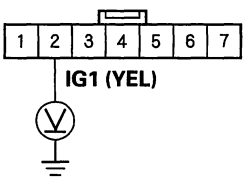


Wire side of female terminals

   *Is there battery voltage?*

   **YES**—Go to step 10.

   **NO**—Check fuse No. 2 (15 A) in the under-dash fuse /relay box or for an open in the YEL wire between the under-dash fuse-relay box and the immobilizer-keyless control unit.■
10. Check for voltage between the immobilizer-keyless control unit 7P connector No. 7 terminal and body ground.

   **IMMOBILIZER-KEYLESS CONTROL UNIT 7P CONNECTOR**

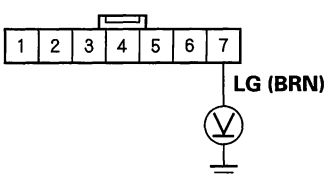


Wire side of female terminals

   *Is there 0.5 V or more?*

   **YES**—Repair poor connection or open between the immobilizer-keyless control unit 7P connector No. 7 terminal and G101.■

   **NO**—Replace the immobilizer-keyless control unit.■



BACK

Protected by AR



## Engine does not start with the immobilizer key

NOTE: Before troubleshooting, check the items listed in "General Check before Troubleshooting" and "How to Troubleshoot" (see page 22-333).

1. Try to start the engine.

   *Does the engine start?*

   **YES**—Intermittent failure, the vehicle is OK at this time. Check status log (see page 22-333). ■

   **NO**—Go to step 2.

2. Turn the ignition switch OFF.

3. Turn the ignition switch ON (II), and check the immobilizer indicator indication.

   *Does the indicator quickly flash once?*

   **YES**—Go to step 4.

   **NO**—Go to the immobilizer indicator blinks troubleshooting (see page 22-336). ■

4. Turn the ignition switch to START (III).

   *Does the starter motor run?*

   **YES**—Go to step 5.

   **NO**—Go to Starting System and check the starter motor. ■

5. Try to start the engine with the immobilizer key.

   *Does the engine start?*

   **YES**—Go to step 6.

   **NO**—Go to the PGM-FI System Symptom Troubleshooting. ■

6. Wait for a few minutes with the engine running.

   *Does the engine stop?*

   **YES**—Go to the PGM-FI System Symptom Troubleshooting. ■

   **NO**—The system is OK at this time. ■

## Immobilizer indicator does not go off

1. Turn the ignition switch OFF.

2. Connect the HDS to the data link connector.

3. Turn the ignition switch ON (II).

4. Enter the IMMOBILIZER, then select the IMMOBILIZER INFORMATION.

5. Do the SYSTEM CHECK with the HDS.

   *Is N-1 OK indicated?*

   **YES**—Replace the gauge control module. ■

   **NO**—Substitute a known-good immobilizer-keyless control unit, then register it and recheck. If the symptom goes away, replace the original immobilizer-keyless control unit. ■

Protected by AR



## System Check

1. Connect the HDS to the data link connector.
2. Turn the ignition switch ON (II).
3. Monitor the System Check in the Immobilizer Info with the HDS.
4. If the HDS displays the "Normal", the immobilizer system is OK. If the HDS displays any other messages, check as follows:

| System Check No. | Status Log. Indication | System Check | Possible Cause |
|---|---|---|---|
| A-1 | Possible | The key is not registered | • This key is not registered in the immobilizer-keyless control unit. Try to register keys using the HDS.<br>• No communication between the antenna and the immobilizer key metal such as key chains/key rings/ other keys.<br>• Low battery voltage. |
| A-2 | Possible | Communication error between the key and immobilizer unit | • Intermittent interruption between transponder and immobilizer-keyless control unit.<br>• The immobilizer key type is incorrect non-Honda key.<br>• Key failure (transponder failure)<br>• No communication between the antenna and the immobilizer key by influence of metal such as key chains/key rings/other keys.<br>• Low battery voltage. |
| A-3 | Possible | No communication between the key and immobilizer unit | • The ignition switch was turned on with a non-immobilizer key.<br>• The immobilizer key type is incorrect non-Honda key.<br>• Key failure (transponder failure)<br>• No communication between the antenna and the immobilizer key by influence of metal such as key chains/key rings/other keys.<br>• Low battery voltage.<br>• Immobilizer-keyless control unit failure |
| B-1 | Possible | The PCM is not registered | • The PCM was not registered. Try to register the PCM using the HDS.<br>• No communication between the PCM and the immobilizer-keyless control unit because of low battery voltage.<br>• No communication between the immobilizer-keyless control unit and the PCM because of interference. |
| B-2 | Possible | Error of communication format in PCM | • The PCM was not registered. Try to register the PCM using the HDS.<br>• No communication between the PCM and the immobilizer-keyless control unit because of low battery voltage.<br>• No communication between the immobilizer-keyless control unit and the PCM because of interference. |



BACK

Protected by AR



| System Check No. | Status Log. Indication | System Check | Possible Cause |
|---|---|---|---|
| C-1 | Possible | No registration of IMOES Unit | • IMOES unit was not registered.<br>• No communication between the IMOES unit and the immobilizer-keyless control unit because of low battery voltage.<br>• No communication between the IMOES unit and the immobilizer-keyless control unit because of interference. |
| C-2 | Possible | Error of communication format in IMOES Unit | • IMOES unit was not registered.<br>• No communication between the IMOES unit and the immobilizer-keyless control unit because of low battery voltage.<br>• No communication between the IMOES unit and the immobilizer-keyless control unit because of interference. |
| D-1 | Possible | S-net line short | • Harness short from the PCM to the immobilizer-keyless control unit. (S-net line short)<br>• No communication between the PCM and the immobilizer-keyless control unit because of low battery voltage.<br>• No communication between the immobilizer-keyless unit and the PCM because of interference.<br>• Immobilizer-keyless control unit failure<br>• PCM failure |
| D-2 | Possible | No communication between IMOES unit and Immobilizer Unit | • Blown fuse<br>• Harness open from the IMOES unit to the immobilizer-keyless control unit.<br>• No communication between the IMOES unit and the immobilizer-keyless control unit because of low battery voltage.<br>• No communication between the IMOES unit and the immobilizer-keyless control unit because of interference.<br>• Immobilizer-keyless control unit failure<br>• IMOES unit failure |
| D-3 | Possible | No communication between PCM and Immobilizer Unit | • Blown fuse<br>• Harness open from the PCM to the immobilizer-keyless control unit.<br>• No communication between the PCM and the immobilizer-keyless control unit because of low battery voltage.<br>• No communication between the immobilizer-keyless control unit and the PCM because of interference.<br>• Immobilizer-keyless control unit failure<br>• PCM failuer |
| E-1 | ——— | Initial registration of Immobilizer Unit is not completed | The immobilizer-keyless control unit is not registered. Try to register the immobilizer-keyless control unit using the HDS. |
| E-2 | | | |
| E-3 | | | |
| E-4 | | | |
| E-5 | | | |
| F-1 | ——— | Special Mode | Turn the ignition switch ON (II) and OFF with the registered key. |
| F-2 | | | |
| F-3 | | | |
| F-4 | | | |
| F-5 | | | |

Protected by AR

# Immobilizer System

## Status Log

If you suspect there is a immobilizer system problem, check the status log.

1. Connect the HDS to the data link connector.
2. Turn the ignition switch ON (II).
3. On the HDS screen, select Honda systems, select immobilizer set-up, select immobilizer information, then select status log.
4. Check the status log count. Troubleshoot the status with the highest count first. If no counts are listed, the immobilizer system is OK. Continue with normal symptom troubleshooting.

| Status Log No. | Detected Item | Probable Cause |
|---|---|---|
| A-1 | KEY CODE MISMATCH<br>(Code format normal, but code data is mismatch) | 1. The key was not registered<br>2. Interference from metal such as key chains<br>3. Low battery voltage |
| A-2 | KEY CODE MISMATCH<br>(Code format failure) | 1. Ignition switch was turned on with another type of immobilizer key or aftermarket key<br>2. Interference from metal such as key chains<br>3. Low battery voltage |
| A-3 | KEY CODE MISMATCH<br>(No key code or non-immobilizer key) | 1. Ignition switch was turn on with another type of immobilizer key or aftermarket key<br>2. Interference from metal such as key chains<br>3. Low battery voltage<br>4. Key failure<br>5. Immobilizer control unit-receiver failure |
| B-1 | PCM CODE MISMATCH<br>(Code format normal, but code data is mismatch) | 1. PCM was not registered correctly<br>2. Low battery voltage<br>3. Poor or loose terminal connections at the immobilizer control unit-receiver<br>4. Communication line electrical noise |
| B-2 | PCM MISMATCH<br>(Code format failure) | 1. PCM was not registered correctly<br>2. Low battery voltage<br>3. Poor or loose terminal connections at the immobilizer control unit-receiver<br>4. Communication line electrical noise |
| D-1 | SECURITY-NET LINE PROBLEM<br>(Short to ground) | 1. Low battery voltage<br>2. Poor or loose terminal connections at the immobilizer control unit-receiver and the PCM<br>3. Communication line electrical noise |
| D-3 | SECURITY-NET LINE PROBLEM<br>(Open line or PCM failure) | 1. Open or short in the harness from the PCM to the immobilizer control unit-receiver<br>2. Low battery voltage<br>3. Poor or loose terminal connections at the immobilizer control unit-receiver and the PCM<br>4. Communication line electrical noise |



BACK

Protected by AR



# Immobilizer Key Registration

NOTE:
- The HDS is required for registration of the immobilizer keys.
- Check for aftermarket electrical equipment that can cause problems with transponder operation.
- The immobilizer control unit-receiver can store up to six immobilizer Keys.

## Add one new key

1. Have a registered key, a new immobilizer key, and the first pass word from the iN system.
2. Connect the HDS to the data link connector.
3. Turn the ignition switch ON (II).
4. Select "IMMOBILIZER" from the "SYSTEM SELECT" menu.
5. Select "Add and Delete Keys", then "Add 1 key".
6. Do the registration according to the instructions on the HDS screen.
7. Check if the engine can be started by the newly registered key.

## Delete or add multiple keys

NOTE: If any of the registered keys were lost, do the following procedure to delete the lost registered key.

1. Have all registered keys, all new keys, and the first password.
2. Connect the HDS to the data link connector.
3. Turn the ignition switch ON (II).
4. Select "IMMOBILIZER" from the "SYSTEM SELECT" menu.
5. Select "Add and Delete Keys", or "Delete or Add Multiple Keys".
6. Do the registration according to the instruction of HDS screen.
7. Check if the engine can be started by all the registered keys.

## All keys are lost

1. Prepare all new keys and have the immobilizer PCM code.
2. Connect the HDS to the data link connector.
3. Turn the ignition switch ON (II).
4. Select "IMMOBILIZER" from the "SYSTEM SELECT" menu.
5. Select "Add and Delete Keys", then "ALL KEYS LOST".
6. Do the registration according to the instruction of HDS screen.
7. Check if the engine can be started by all the registered keys.

Protected by AR



## Immobilizer-keyless Control Unit Input Test

NOTE: Before troubleshooting the immobilizer system, troubleshoot the B-CAN System Diagnosis Test Mode A (see page 22-88) and check the No. 10 (7.5 A) and No. 38 (30 A) fuses in the under-dash fuse/relay box.

1. Remove the steering column covers (see page 20-107).

2. Disconnect the 7P connector (A) from the immobilizer-keyless control unit (B).

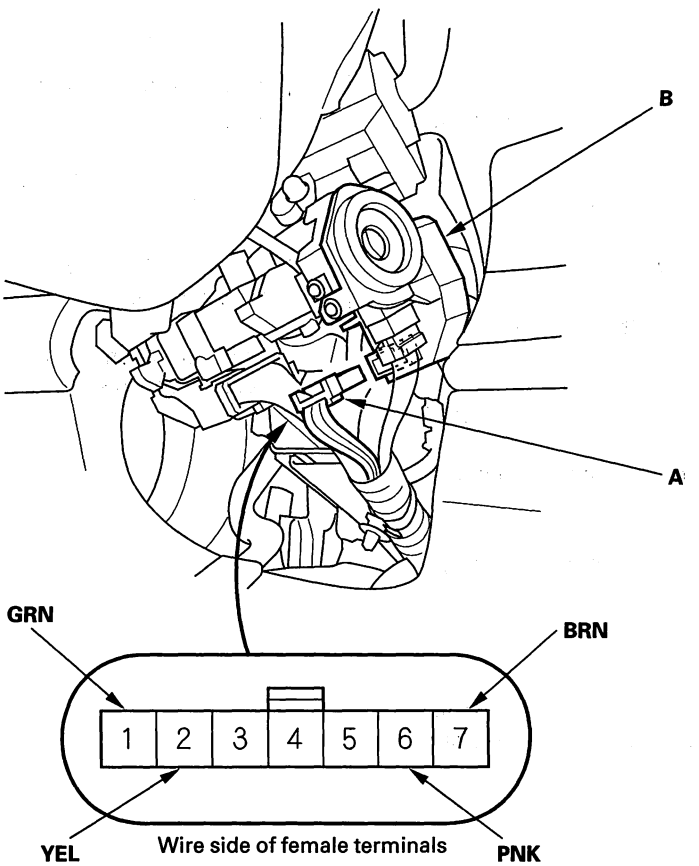


3. Inspect the connector and socket terminals to be sure they are all making good contact.

   - If the terminals are bent, loose or corroded, repair them as necessary, and recheck the system.
   - If the terminals look OK, go to step 5.



BACK

Protected by AR



4. With the connector still disconnected, make these input tests at the connector.

- If any test indicates a problem, find and correct the cause, then recheck the system.
- If all the input tests prove OK, go to step 5.

| Cavity | Wire | Test condition | Test: Desired result | Possible cause if result is not obtained |
|---|---|---|---|---|
| 1 | GRN | Under all conditions | Check for voltage between immobilizer-keyless control unit 7P connector No. 1 terminal and body ground: There should be battery voltage. | • Blown No. 23 (10 A) fuse in the under-hood fuse/relay box<br>• An open in the wire |
| 2 | YEL | Ignition switch ON (II) | Check for voltage to ground: There should be battery voltage. | • Blown No. 2 (15 A) fuse in the under-dash fuse/relay box<br>• An open in the wire |

5. Reconnect the connectors to the immobilizer-keyless control unit, and make these input tests at the connector.

- If any test indicates a problem, find and correct the cause, then recheck the system.
- If all the input tests prove OK, the immobilizer-keyless control unit must be faulty; replace it.

| Cavity | Wire | Test condition | Test: Desired result | Possible cause if result is not obtained |
|---|---|---|---|---|
| 7 | BRN | Under all conditions | Check for voltage to ground: There should be less than 0.5 V. | • Poor ground (G101)<br>• An open in the wire |
| 6 | PNK | Ignition key inserted into the ignition switch | Check for voltage to ground: There should be less than 0.5 V. | • Poor ground (G502)<br>• Faulty ignition key switch<br>• An open in the wire |

Protected by AR



## Immobilizer-keyless Control Unit Replacement

NOTE: Requires PCM code and all of the client's keys.

1. Remove the steering column covers (see page 20-107).

2. Disconnect the 7P connector (A) from the immobilizer-keyless control unit (B).

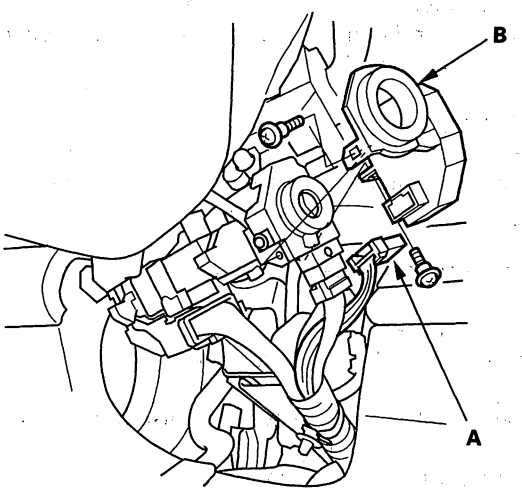


3. Remove the two screws and the immobilizer-keyless control unit.

4. Install the immobilizer-keyless control unit in the reverse order of removal.

5. After replacement, register the immobilizer-keyless control unit (see page 22-341), and make sure the immobilizer system works properly.

6. Program all of the client's keyless transmitters (see page 22-144).



BACK

Protected by AR

BACK

Protected by AR

## SUPPLEMENTAL RESTRAINT SYSTEM (SRS) (If Audio, Navigation, and Telematics maintenance is required)

The RDX SRS includes a driver's airbag in the steering wheel hub, a passenger's airbag in the dashboard above the glove box, seat belt tensioners in the front seat belt retractors, driver's seat belt buckle tensioner in the driver's seat belt lower anchor, front passenger's seat belt buckle tensioners in the front passenger's seat belt lower anchor, side curtain airbags in the sides of the roof, and side airbags in the front seat-backs. Information necessary to safely service the SRS is included in this Service Manual. Items marked with an asterisk ( * ) on the contents page include or are located near SRS components. Servicing, disassembling, or replacing these items require special precautions and tools, and should be done only by an authorized Acura dealer.

- To avoid rendering the SRS inoperative, which could lead to personal injury or death in the event of a severe frontal or side collision, all SRS service work must be performed by an authorized Acura dealer.
- Improper service procedures, including incorrect removal and installation of the SRS, could lead to personal injury caused by unintentional deployment of the airbags and/or side airbags.
- Do not bump or impact the SRS unit, front impact sensors, or side impact sensors when the ignition switch is ON (II), or for at least 3 minutes after the ignition switch is turned OFF; otherwise, the system may fail in a collision, or the airbags may deploy.
- SRS electrical connectors are identified by yellow color coding. Related components are located in the steering column, front console, dashboard, dashboard lower panel, in the dashboard above the glove box, in the front seats, in the roof side, and around the floor. Do not use electrical test equipment on these circuits.

BACK

Protected by AR

# Audio, Navigation, and Telematics


## Audio, Navigation, and Telematics
Special Tools ..... 23-2
DTC Troubleshooting Index ..... 23-3

## Audio System
Component Location Index ..... 23-4
Symptom Troubleshooting Index ..... 23-7
System Description ..... 23-8
Circuit Diagram ..... 23-30
Self-diagnostic Function ..... 23-38
Error Codes ..... 23-44
Symptom Troubleshooting ..... 23-45
Sound Quality Diagnosis ..... 23-93
* Audio Unit Removal/Installation ..... 23-99
Audio-HVAC Subdisplay Unit Removal/Installation ..... 23-101
Audio-HVAC Display Unit Removal/Installation ..... 23-101
Speaker Test/Replacement ..... 23-102
* Stereo Amplifier Removal/Installation ..... 23-107
AcuraLink Control Unit (XM Receiver) Removal/Installation ..... 23-108
XM Receiver Removal/Installation ..... 23-108
Audio Switch Panel Removal/Installation ..... 23-109
* Audio Remote Switch Test ..... 23-109
AM/FM/XM Antenna Replacement ..... 23-110
AM/FM Antenna Replacement ..... 23-110

## Navigation System
Component Location Index ..... 23-111
General Troubleshooting Information ..... 23-112
Symptom Troubleshooting Index ..... 23-116
System Description ..... 23-119
Circuit Diagram ..... 23-144
Symptom Troubleshooting ..... 23-150
System Diagnostic Mode ..... 23-169
Forced Starting of Display ..... 23-189
DVD-ROM Replacement ..... 23-189
* Navigation Unit Removal/Installation ..... 23-190
GPS Antenna Removal/Installation ..... 23-190
Navigation Display Unit Removal/Installation ..... 23-191
Navigation Switch Panel Removal/Installation ..... 23-191
Rearview Camera Removal/Installation ... 23-192
* Voice Control Switch Test ..... 23-193

## AcuraLink
Component Location Index ..... 23-194
Symptom Troubleshooting Index ..... 23-195
System Description ..... 23-196
Self-diagnostic Function ..... 23-197
Circuit Diagram ..... 23-208
DTC Troubleshooting ..... 23-211
Symptom Troubleshooting ..... 23-220

## HandsFreeLink System
Component Location Index ..... 23-222
General Troubleshooting Information ..... 23-223
Symptom Troubleshooting Index ..... 23-226
System Description ..... 23-227
Circuit Diagram ..... 23-228
HFL System Troubleshooting ..... 23-230
DTC Troubleshooting ..... 23-231
Symptom Troubleshooting ..... 23-239
* HFL-Voice Control Switch Test/Replacement ..... 23-240
Control Unit Input Test ..... 23-241

Protected by AR



## Special Tools

| Ref. No. | Tool Number | Description | Qty |
|---|---|---|---|
| ① | 07AAZ-SDBA100 | Diagnostics CD | 1 |
| ② | 07AAZ-SDBA200 (ABEX-TCD-725B) | Skip Test CD | 1 |
| ③ | 07AAZ-SDBA300 (ABEX-TCD-721) | Skip Test CD | 1 |
| ④ | 07PAZ-0010100 | SCS Service Connector | 1 |

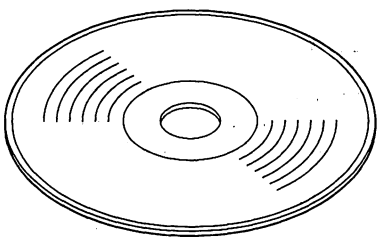

①, ②, ③

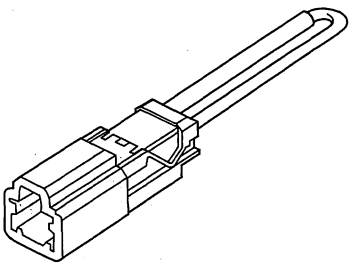

④



BACK

Protected by AR

# DTC Troubleshooting Index

**HandsFreeLink Control Unit**

| DTC | Description | DTC type | Page |
|---|---|---|---|
| B1750 | Communication bus line error (Bus off) | Loss of communication | (see page 22-105) |
| B1775 | Microphone input/output short to power/open | Signal error | (see page 23-231) |
| B1776 | Microphone input/output short to ground/open | Signal error | (see page 23-232) |
| B1779 | HFL switch or HFL-voice control switch (HFL TALK/HFL BACK buttons) circuit open/short | Signal error | (see page 23-234) |
| B1780 | HFL-voice control switch (HFL TALK/HFL BACK buttons) circuit short to power | Signal error | (see page 23-236) |
| B1792 | HandsFreeLink control unit internal error | Internal error | (see page 23-238) |

**AcuraLink Control Unit**

| DTC | Description | DTC type | Page |
|---|---|---|---|
| B2204 | B-CAN communication line error | Loss of communication | (see page 23-211) |
| B2205 | F-CAN communication line error | Loss of communication | (see page 23-212) |
| B2207 | Navigation unit lost communication with AcuraLink control unit (XM receiver) | Loss of communication | (see page 23-213) |
| B2208 | HandsFreeLink control unit lost communication with AcuraLink control unit (XM receiver) | Loss of communication | (see page 23-216) |
| B2209 | AcuraLink control unit internal error | Internal error | (see page 23-219) |
| B2240 | XM antenna error | Internal error | (see page 23-219) |

Protected by AR



## Component Location Index

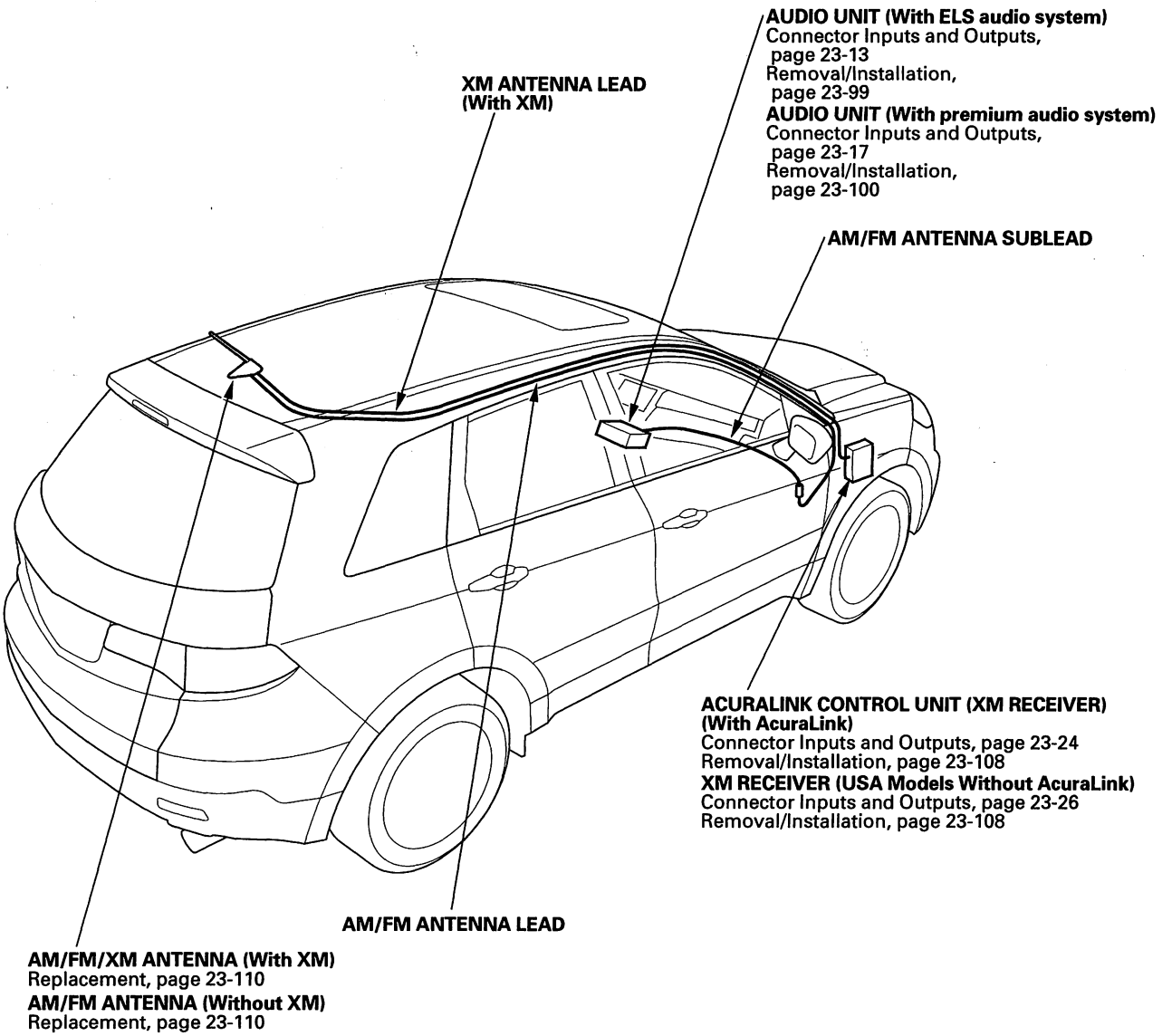




BACK

Protected by AR

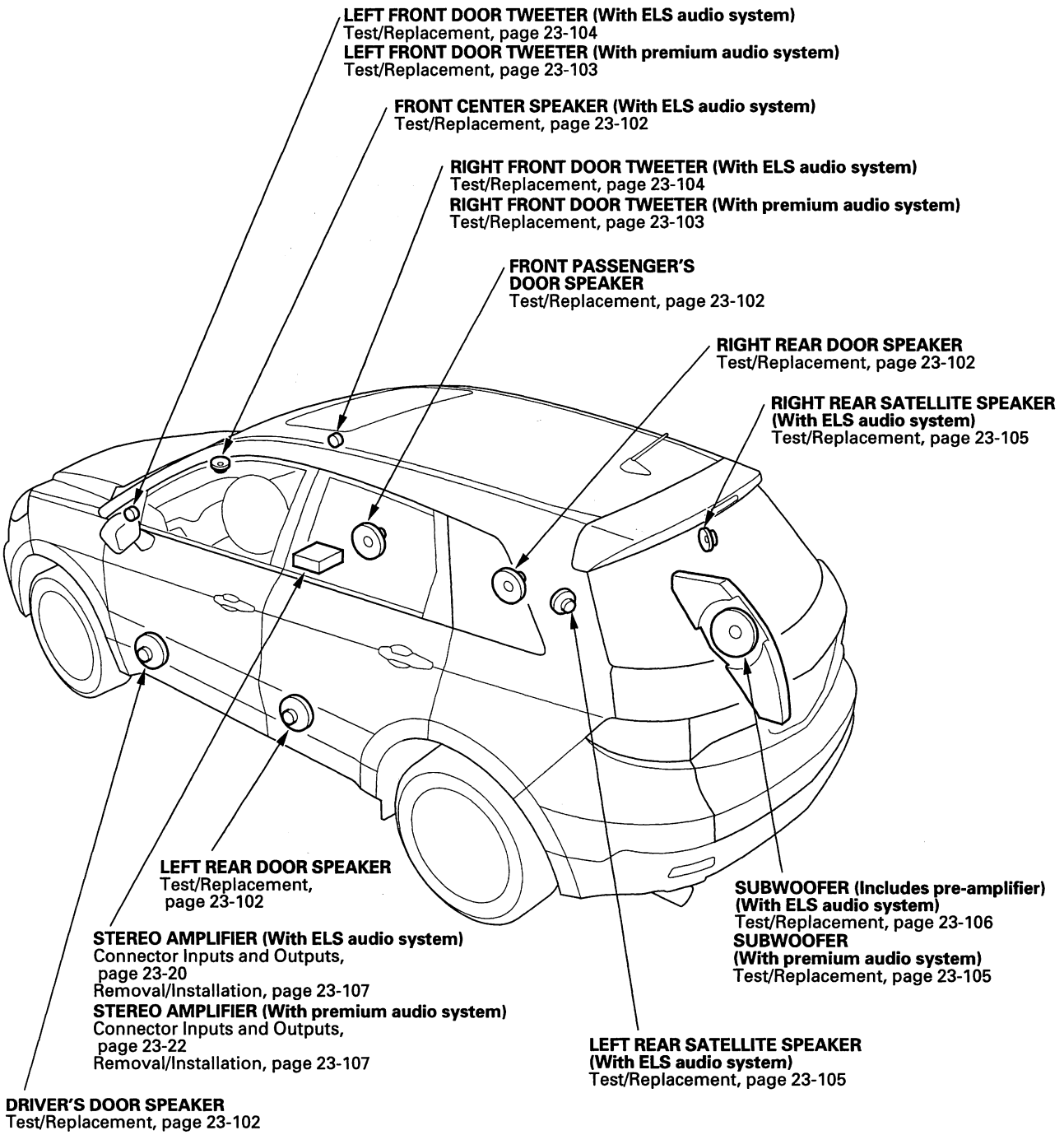


(cont'd)

Protected by AR



## Component Location Index (cont'd)

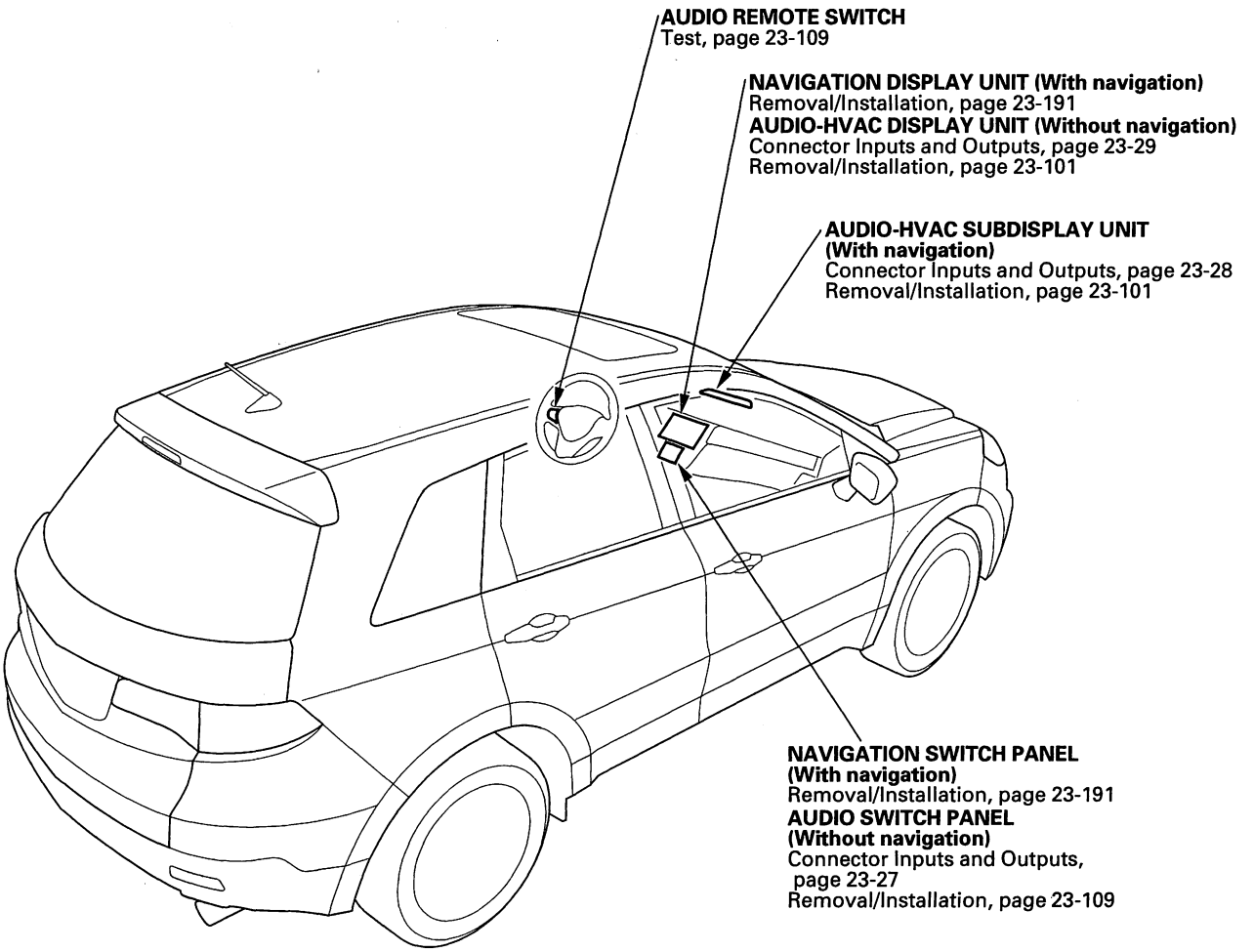




BACK

Protected by AR

# Symptom Troubleshooting Index

| Symptom | Diagnostic procedure | Also check for |
|---|---|---|
| Poor AM or FM radio reception or interference | Symptom Troubleshooting (see page 23-45) | • AM/FM antenna lead/sublead short or open in the wire<br>• AM/FM Antenna |
| Power switch will not turn ON (No information display and no sound) | Symptom Troubleshooting (see page 23-48) | |
| Power will not turn OFF | Symptom Troubleshooting (see page 23-50) | |
| No sound is heard from speaker(s) (display is normal) (with ELS audio system) | Symptom Troubleshooting (see page 23-51) | |
| No sound is heard from speaker(s) (display is normal) (with premium audio system) | Symptom Troubleshooting (see page 23-56) | |
| Poor or no sound with XM radio (audio unit can display XM channels) | Symptom Troubleshooting (see page 23-60) | |
| XM radio display is blank and no station information is displayed (with AcuraLink) | Symptom Troubleshooting (see page 23-63) | |
| XM radio display is blank and no station information is displayed (without AcuraLink) | Symptom Troubleshooting (see page 23-66) | |
| Audio system sound is weak or distorted (display is normal) | Symptom Troubleshooting (see page 23-69) | |
| Audio unit button illumination does not work (with ELS audio system) | Symptom Troubleshooting (see page 23-70) | |
| Audio switch panel button illumination does not work (with premium audio system) | Symptom Troubleshooting (see page 23-71) | |
| Radio preset memory is lost | Symptom Troubleshooting (see page 23-72) | Internal error |
| XM radio preset memory is lost | Symptom Troubleshooting (see page 23-72) | |
| Audio disc does not eject | Symptom Troubleshooting (see page 23-74) | |
| Audio disc changer does not load all six discs | Symptom Troubleshooting (see page 23-75) | |
| Audio disc changer does not move between discs | Symptom Troubleshooting (see page 23-75) | |
| Volume does not change | Symptom Troubleshooting (see page 23-76) | |
| Volume does not increase with speed | Symptom Troubleshooting (see page 23-79) | |
| Volume is too high, or too low when driving at freeway speeds | Symptom Troubleshooting (see page 23-80) | |
| Radio tuner does not change stations | Symptom Troubleshooting (see page 23-77) | |
| Audio disc does not load | Symptom Troubleshooting (see page 23-81) | |
| Audio disc does not play | Symptom Troubleshooting (see page 23-81) | |
| Audio disc skips | Symptom Troubleshooting (see page 23-82) | Tire pressure (over-inflated) |
| Audio system information does not display on the audio-HVAC subdisplay unit (with ELS audio system) | Symptom Troubleshooting (see page 23-83) | |
| Audio system information does not display on the audio-HVAC display unit (with premium audio system) | Symptom Troubleshooting (see page 23-86) | |
| Audio remote switch does not work properly | Symptom Troubleshooting (see page 23-89) | |
| Error code: XM NO SIGNAL is displayed | Symptom Troubleshooting (see page 23-90) | |
| Error code: XM ANTENNA is displayed | Symptom Troubleshooting (see page 23-93) | |

Protected by AR

# Audio System

## System Description

### Overview

The audio unit acts as the "processor" for all audio functions. You can select the audio functions from the front panel, the audio remote (on steering wheel), or by using the navigation voice control system. The audio display provides the current front and rear audio status. For vehicles with the navigation option, additional audio information is available by touching the audio button. (See the owner's manual for more details.)

Each audio component passes its audio signal to the audio unit. In addition, it communicates with the audio unit via the GA-Net bus. Any open connection in this circuit will cause audio and navigation functions to appear inoperative.

The audio unit has a built-in EEPROM (electrically erasable programmable read-only memory). This memory can hold the audio preset data (AM/FM radio frequency, sound settings) even when +B power is removed.

With the ELS and the premium audio system, an audio amplifier unit powers the speakers.

The audio systems are equipped with speed-sensitive volume compensation (SVC). The audio unit receives the vehicle speed pulse (VSP) from the PCM. The system processes the speed input and increases the navigation or audio system volume level as the vehicle speed increases to compensate for the various interior noise that occurs at higher speeds. When the vehicle slows down, the volume returns to its normal level. The SVC has four settings: SVC OFF, LOW, MID and HIGH that can be adjusted using the audio unit. The SVC comes from the factory with the MID set as the default (See Owner's Manual for more information).

The 6DVD (6CD) changer output can be directed to the audio unit.

The XM radio plays through the audio unit.

A security signal is daisy-chained between the audio and navigation components for integration into the vehicle's security system.

The optional navigation system provides voice control for audio, XM, and CD player. Voice control commands are communicated on the GA-Net (audio unit). When using the talk back or route guidance (RG), only the center speaker is muted and the front speakers give the navigation instructions. When using HFL/AcuraLink, the center speaker, the rear speakers, and the subwoofer are muted and the front speakers give the telephone sound. When using HFL/AcuraLink and RG or talk back, the center speaker, the rear speakers, and the subwoofer are muted and the front speakers give the telephone sound and the navigation instructions. Muting commands are passed on the GA-Net bus. For more information, see the navigation section. The outline of the audio interruption function is shown in the following table.

| Contents | Audio output | | | | | |
|---|---|---|---|---|---|---|
| | Center CH | Left front CH | Right front CH | Right rear CH | Left rear CH | Subwoofer CH |
| TALK/BACK | MUTE | Navigation sound | Navigation sound | Audio | Audio | Audio |
| Route guidance | MUTE | Navigation sound | Navigation sound | Audio | Audio | Audio |
| HFL/AcuraLink | MUTE | Telephone sound | Telephone sound | MUTE | MUTE | MUTE |
| HFL/AcuraLink and RG or TALK/BACK | MUTE | Navigation sound | Telephone sound | MUTE | MUTE | MUTE |



BACK

Protected by AR

## System Diagram

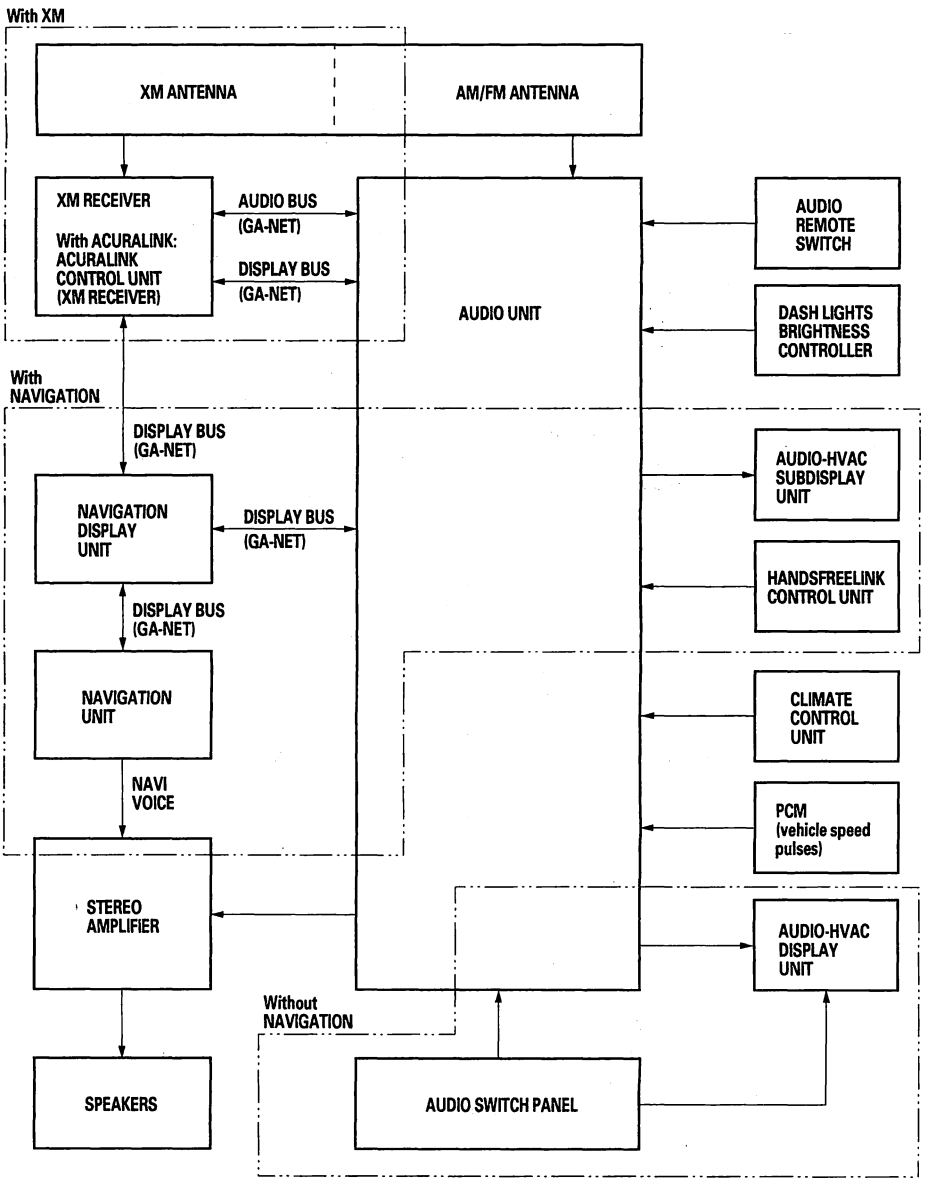


(cont'd)

Protected by AR



## System Description (cont'd)

NOTE: All terms may not apply to this vehicle. See the owner's manual for more information.

**Audio Glossary**

| Item | Definition |
|---|---|
| Active Noise Control | The active noise control system cancels some of the vehicle noise. This occurs in the 1,500—2,400 rpm range. Microphones detect the low frequency sound, and the system outputs a cancelling sound from the audio speaker. |
| AM (Amplitude Modulation) | The type of transmission used in the standard radio broadcast band from 530 to 1705 kHz. |
| Amplifier | A device that increases the level of a signal by increasing the current or voltage. |
| Antenna | A device used to send or receive electromagnetic waves through the air. |
| ATA (PC Card) | A type of card that has been tested for use in playing WMA, and MP3 music files in the PC card slot. Sizes of up to 1 GB have been tested. |
| Auxiliary jack | Allows the customer to use a portable audio device to input music recordings. |
| Balance | A control that changes the relative volume of the left and right channels. |
| Band | A range of frequencies between two definite limits. Bands are assigned by the Federal Communications Commission for specific uses. |
| Bass | An adjustment for the low frequency sounds of around 160 Hz and below. |
| Byte | A unit of storage for computer files and memory. A CD holds approximately 700 million bytes. |
| Cassette | Audio or video magnetic tape container having two reels. Customers can insert it for recording or play back. |
| Compact Flash | A standard for small-size (3 x 4 cm) memory cards used in mobile computers, PDAs, and digital cameras. Compact flash memory cards are available in sizes of 32 Mb up to 4 GB or more and can be played in the audio PC slot. Sizes above 1 GB have not been tested. |
| CD (Compact Disc) | A 4.5-inch plastic disc containing digital audio recording that is played optically on a laser equipped player. Never use discs with a paper label. In a hot car, labels can curl up and jam the unit. |
| CD Changer | CD player that can store and play more than one CD. Two types are available. Some units accept CDs fed into the changer one at a time, and others accept a magazine (with CD's stacked in a container). |
| CD player | A component designed to play compact disc CD recording using a laser optical pickup. The signal from a CD player usually requires amplification. |
| Distortion | Inexact reproduction of an audio signal caused by playing music at levels the audio system cannot handle. |
| Dolby (noise reduction) | A processing system developed by Dolby Laboratories that reduce the background noise on recording media. The result is a clearer playback from the audio system. |
| DVD (Digital Versatile Disc) | A 4.5-inch CD-like format used for storing movies with digital audio and video features. The DVD-A format is a DVD format designed for DVD audio systems. Some vehicles can play DVD and DVD-A formats. |
| Equalizer | A device that changes the relative volume of individual frequency bands to suit personal tastes of the listener. |
| Fader | The control that adjusts the relative volume levels of front and rear speakers in a four-speaker system. |
| Format | To prepare a PC card to receive files, this function is performed on a PC. Always choose either FAT or FAT32 as the NTSF format is not accepted by the system. Pick the default sectors for the format method selected. |
| FM (Frequency Modulation) | The modulation used for radio and television sound transmission in most of the world. Less prone to interference than AM. The FM broadcast band covers roughly 87 to 108 MHz. |
| GB (Gigabyte) | A unit of memory or disk storage equal to 1 billion bytes (1000 million bytes). |



BACK

Protected by AR

**Audio Glossary**

| Item | Definition |
|---|---|
| HDD | Abbreviation for hard disc drive. They are sensitive to heat and it is not recommended that they be used in the PC card slot for playing audio files. |
| Hertz (HZ) | The unit of frequency equal to one cycle per second (cps). One kilohertz (kHz) equals 1,000 cps; one megahertz (MHz) equals 1 million cps. |
| Integrated Amplifier | A component that combines a pre amp and a power amp into a single unit. A receiver combines an integrated amp and a tuner into a single unit. |
| Jewel Case | The hard plastic case that contains a compact disc or DVD. Always use a jewel case to prevent scratches on the underside of a CD or DVD. |
| LCD (Liquid Crystal Display) | A type of digital display that changes reflectance or transmittance when an electrical field is applied to it. |
| MB (Megabyte) | A unit of memory or disc storage equal to 1 million bytes. |
| Memory | Circuitry or devices that hold information in electrical or magnetic form, such as the AM/FM radio presets. |
| Megabyte (M byte) | One million bytes. Written as 1 MB. Megabytes are used as a measure of digital storage space. For example, a CD can hold 650 MB. |
| Mic | An abbreviation for microphone. For vehicles with navigation, the microphone accepts navigation voice commands to control audio and navigation functions. |
| MP3 music files | MP3 is an audio coding format. MP3 is a popular audio compression format on the Internet and computers. CDs, and PC cards with these files can be played on some vehicle'saudio systems. |
| Mute | When the navigation gives guidance, the front speakers are muted (no music). When you use the voice control system, all of the speakers are muted. |
| Noise | Unwanted random sounds like buzzing, hiss, pops, static, whine, etc. |
| PC Card | The slot used for playing MP3 and WMA music files. The PC card is usually a combination of a small flash card in a PCMCIA adaptor that slides into the slot. The ATA, SD, and compact flash types of cards have been tested up to 1 GB. |
| PCMCIA | A computer standard for the slot that the PC card slides into. Another term for the PC card slot. |
| Processor | The part of an audio device that performs tasks/calculations. In the audio unit, the processor handles muting to allow the navi to speak voice commands, and the decoding/playback of the sound files etc. |
| Radio | A head unit that combines a tuner, a preamplifier, and often a power-amplifier. |
| Audio Remote switch | The switches on the steering wheel that control the audio system. |
| SCF (Cold Start Fix) screens | These screens are displayed if the system requires a GPS initialization. The vehicle should be moved outside into an open area away from buildings/and power lines. |
| Stereo | A recording of at least two channels where you can hear sound or music from the left or right side. |
| SD (Secure Digital) card | This compact type of memory card allows for fast data transfer and has built-in security functions. SD cards have a small write-protection switch on the side. |
| Shield | A metallic foil or braided wire layer surrounding conductors which are designed to prevent electrostatic or electromagnetic interference (noise) from external sources such as buzzing, or popping sounds heard on the speakers. |
| Speaker (Loudspeaker) | A device that converts electrical energy into acoustical energy (sound). |
| Subwoofer | A loudspeaker made to reproduce the lowest audio frequencies, approx 25 Hz to 125 Hz. |

(cont'd)

Protected by AR



## System Description (cont'd)

**Audio Glossary**

| Item | Definition |
|---|---|
| Track | A sound recording on a CD, tape, or PC card. |
| Treble | An adjustment to control the "volume" of the high frequency sounds. |
| Tuner | A component (or part of a component) that receives radio signals and selects one broadcast from many. |
| Tweeter | A speaker designed to reproduce the higher frequencies (treble) only. |
| Voice Coil | A coil of wire wrapped around a tube and then attached to the speaker cone or diaphragm. When an audio signal is applied, the coil becomes an electromagnet and interacts with the permanent magnet causing the cone or diaphragm to vibrate. We interpret this vibration as sound. |
| Volume Control | Allows you to control the loudness of the music. |
| WMA music file | Windows Media Audio File. This is an accepted format for music files to be played on either a CD or a PC card. |
| Woofer | A speaker that is designed to reproduce bass frequencies only. |
| XM Radio | Satellite based radio transmission, which also uses a ground based repeater network to ensure seamless reception. The channels originate from XM's broadcast center, in Washington, DC, and uplink to two satellites. These satellites transmit the signal across the entire continental United States. |
| XM Receiver | The external component that receives and processes the XM signals from the XM satellites, and terrestrial (land) stations. The audio unit communicates to the XM receiver over the GA-Net bus. |



BACK

Protected by AR

## Audio Unit Connector for Inputs and Outputs

When replacing an audio unit connector, match the wires to the cavities listed in the following table.

**With ELS Audio System**

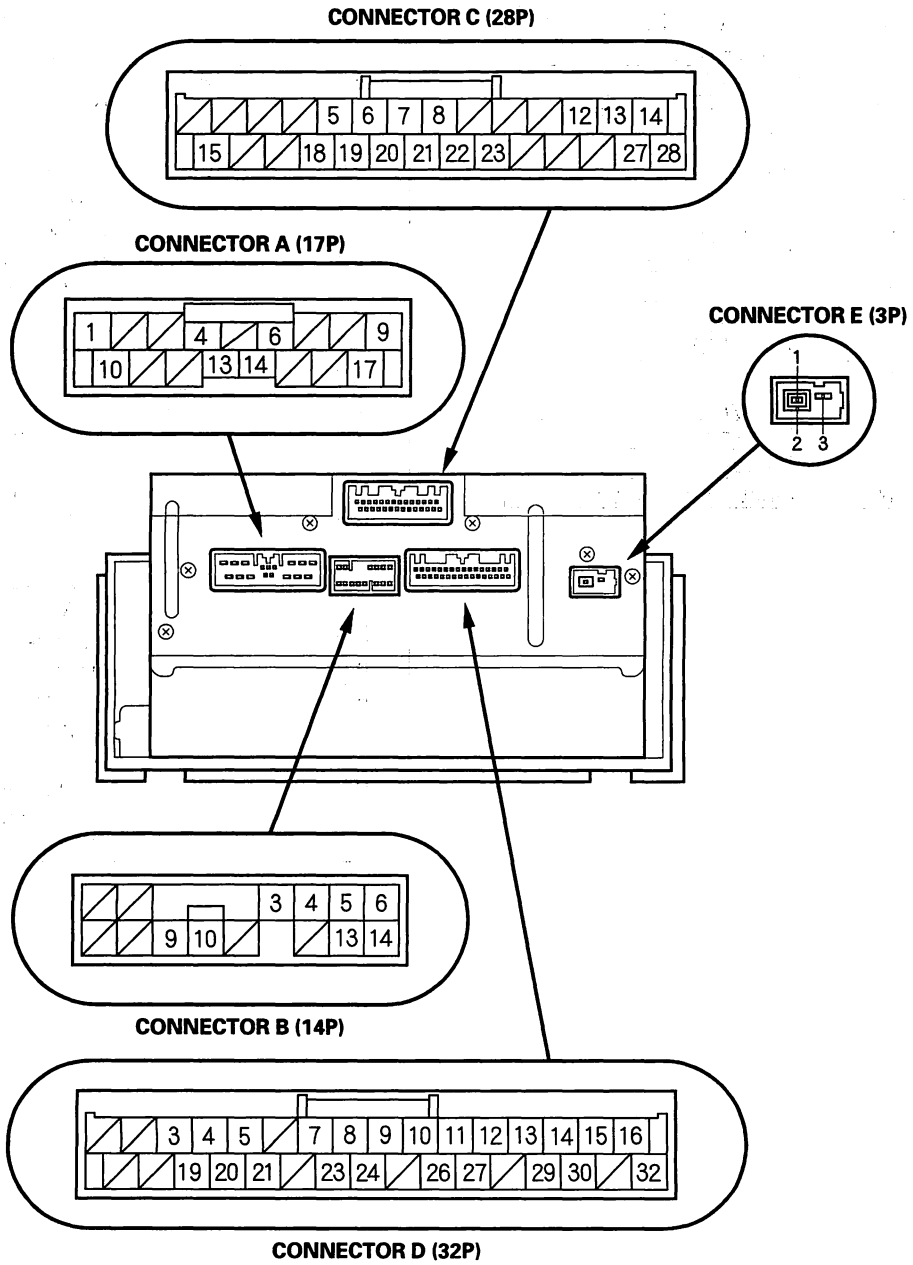


(cont'd)

Protected by AR



## System Description (cont'd)

**CONNECTOR A (17P)**

| Cavity | Wire | Connects to |
|---|---|---|
| A1 | RED | Dash lights brightness controller (ILL− BULB) |
| A2 | ——— | Not used |
| A3 | ——— | Not used |
| A4 | BRN | Navigation display unit (SECURITY) |
| A5 | ——— | Not used |
| A6 | LT BLU | Data link connector (K-LINE) |
| A7 | ——— | Not used |
| A8 | ——— | Not used |
| A9 | BLK | Ground (G504) |
| A10 | GRY | Lights-on signal (ILL+) |
| A11 | ——— | Not used |
| A12 | ——— | Not used |
| A13 | BLU | PCM (VSP) |
| A14 | PUR | ACC (audio power supply) |
| A15 | ——— | Not used |
| A16 | ——— | Not used |
| A17 | GRN | Constant power (+B) |

**CONNECTOR B (14P)**

| Cavity | Wire | Connects to |
|---|---|---|
| B1 | ——— | Not used |
| B2 | ——— | Not used |
| B3 | GRY | • Navigation display unit<br>• AcuraLink control unit (XM receiver)* (BUS SH (GA-NET)) |
| B4 | GRY | AcuraLink control unit (XM receiver) (AUDIO SH (GA-NET))* |
| B5 | RED | AcuraLink control unit (XM receiver) (AUDIO R+ (GA-NET))* |
| B6 | BLK | AcuraLink control unit (XM receiver) (AUDIO L+ (GA-NET))* |
| B7 | ——— | Not used |
| B8 | ——— | Not used |
| B9 | LT BLU | • Navigation display unit<br>• AcuraLink control unit (XM receiver)* (BUS+ (GA-NET)) |
| B10 | PUR | • Navigation display unit<br>• AcuraLink control unit (XM receiver)* (BUS− (GA-NET)) |
| B11 | ——— | Not used |
| B12 | ——— | Not used |
| B13 | WHT | AcuraLink control unit (XM receiver) (AUDIO R− (GA-NET))* |
| B14 | GRN | AcuraLink control unit (XM receiver) (AUDIO L− (GA-NET))* |

*: USA models



BACK

Protected by AR

**CONNECTOR C (28P)**

| Cavity | Wire | Connects to |
|---|---|---|
| C1 | ——— | Not used |
| C2 | ——— | Not used |
| C3 | ——— | Not used |
| C4 | ——— | Not used |
| C5 | ORN | Audio-HVAC subdisplay unit (PNL CE) |
| C6 | GRY | Audio-HVAC subdisplay unit (PNL SH1) |
| C7 | BRN | Audio-HVAC subdisplay unit (PNL 5V GND) |
| C8 | ORN | Audio-HVAC subdisplay unit (LCD BL—) |
| C9 | ——— | Not used |
| C10 | ——— | Not used |
| C11 | ——— | Not used |
| C12 | LT BLU | HandsFreeLink control unit (HFL ICON) |
| C13 | RED | HandsFreeLink control unit (TELM SIG—) |
| C14 | GRY | HandsFreeLink control unit (TELM SIG SH) |
| C15 | LT GRN | Climate control unit (SO AC2) |
| C16 | ——— | Not used |
| C17 | ——— | Not used |
| C18 | YEL | Audio-HVAC subdisplay unit (PNL DATA1) |
| C19 | BLU | Audio-HVAC subdisplay unit (PNL RST) |
| C20 | PUR | Audio-HVAC subdisplay unit (PNL CLK) |
| C21 | RED | Audio-HVAC subdisplay unit (PNL +5V) |
| C22 | GRN | Audio-HVAC subdisplay unit (LCD BL+) |
| C23 | PUR | AcuraLink control unit (XM receiver) (HIP MUTE)* |
| C24 | ——— | Not used |
| C25 | ——— | Not used |
| C26 | ——— | Not used |
| C27 | GRN | HandsFreeLink control unit (TELM SIG+) |
| C28 | LT GRN | HandsFreeLink control unit (HFL MUTE) |

*: With AcuraLink

(cont'd)

Protected by AR



## System Description (cont'd)

**CONNECTOR D (32P)**

| Cavity | Wire | Connects to |
|---|---|---|
| D1 | ——— | Not used |
| D2 | ——— | Not used |
| D3 | BRN | Audio remote switch (GND) |
| D4 | ORN | Stereo amplifier (AMP MUTE) |
| D5 | GRY | Stereo amplifier (ELS SH GND) |
| D6 | ——— | Not used |
| D7 | BLK | Ground (G504) |
| D8 | BLK | Stereo amplifier (FL PRE−) |
| D9 | GRY | Stereo amplifier (SH FR-FL GND) |
| D10 | GRN | Stereo amplifier (FR PRE−) |
| D11 | PUR | Stereo amplifier (RL PRE−) |
| D12 | GRY | Stereo amplifier (SH RR-RL GND) |
| D13 | BLU | Stereo amplifier (RR PRE−) |
| D14 | LT BLU | Stereo amplifier (SUBW PRE−) |
| D15 | GRY | Stereo amplifier (SH CTR-SUBW GND) |
| D16 | BRN | Stereo amplifier (CTR PRE−) |
| D17 | ——— | Not used |
| D18 | ——— | Not used |
| D19 | PNK | Audio remote switch (REMOTE) |
| D20 | RED | Stereo amplifier (ELS DATA−) |
| D21 | GRN | Stereo amplifier (ELS DATA+) |
| D22 | ——— | Not used |
| D23 | YEL | Stereo amplifier (SWD +B) |
| D24 | WHT | Stereo amplifier (FL PRE+) |
| D25 | ——— | Not used |
| D26 | RED | Stereo amplifier (FR PRE+) |
| D27 | YEL | Stereo amplifier (RL PRE+) |
| D28 | ——— | Not used |
| D29 | ORN | Stereo amplifier (RP PRE+) |
| D30 | PNK | Stereo amplifier (SUBW PRE+) |
| D31 | ——— | Not used |
| D32 | LT GRN | Stereo amplifier (CTR PRE+) |

**CONNECTOR E (3P)**

| Cavity | Wire | Connects to |
|---|---|---|
| E1 | ——— | • AM/FM/XM antenna (RF IN)* <br> • AM/FM antenna (RF IN) |
| E2 | ——— | • AM/FM/XM antenna (RF SH)* <br> • AM/FM antenna (RF SH) |
| E3 | ——— | • AM/FM/XM antenna (ANT +B)* <br> • AM/FM antenna (ANT +B) |

*: With AcuraLink



BACK

Protected by AR

## Audio Unit Connector for Inputs and Outputs

When replacing an audio unit connector, match the wires to the cavities listed in the following table.

**With Premium Audio System**

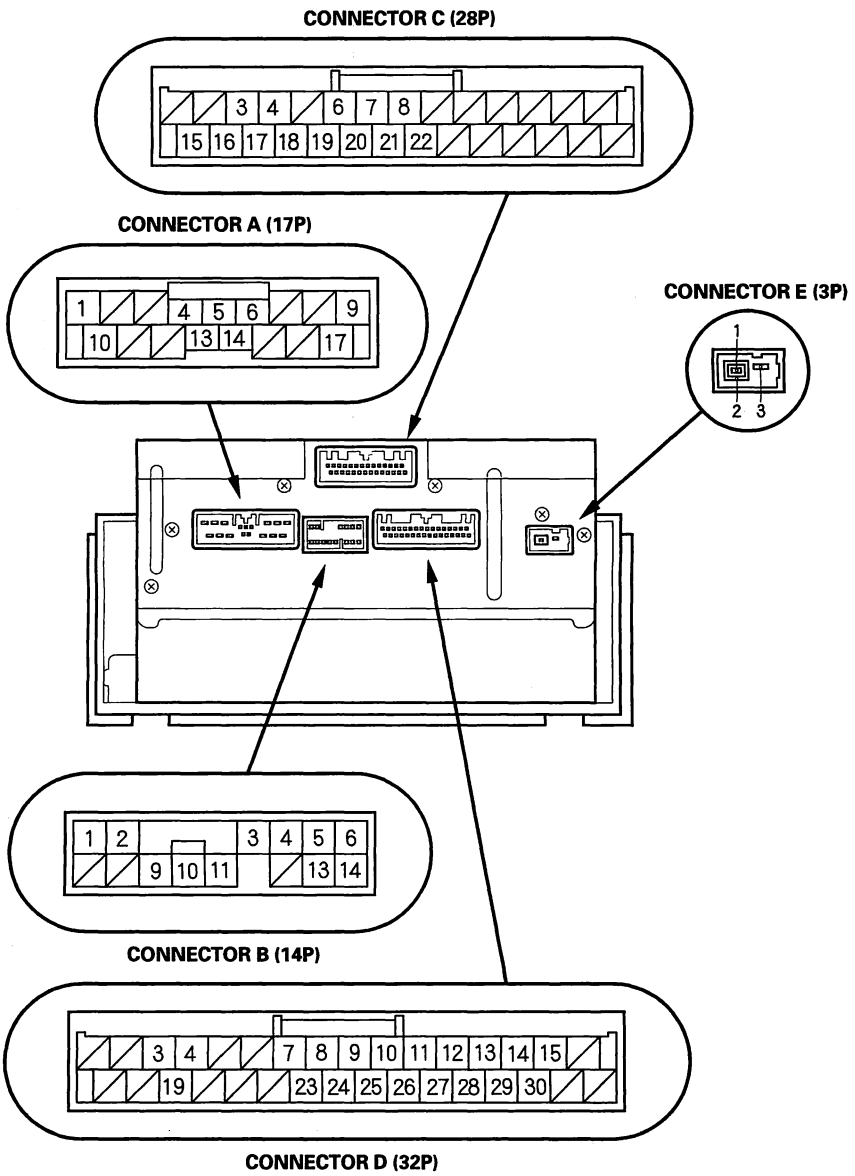


(cont'd)

Protected by AR



## System Description (cont'd)

**CONNECTOR A (17P)**

| Cavity | Wire | Connects to |
|---|---|---|
| A1 | RED | Dash lights brightness controller (ILL− BULB) |
| A2 | ——— | Not used |
| A3 | ——— | Not used |
| A4 | YEL | Multiplex integrated control unit (MICU) (SECURITY) |
| A5 | ——— | Not used |
| A6 | LT BLU | Data link connector (K-LINE) |
| A7 | ——— | Not used |
| A8 | ——— | Not used |
| A9 | BLK | Ground (G504) |
| A10 | GRY | Lights-on signal (ILL+) |
| A11 | ——— | Not used |
| A12 | ——— | Not used |
| A13 | BLU | PCM (VSP) |
| A14 | PUR | ACC (audio power supply) |
| A15 | ——— | Not used |
| A16 | ——— | Not used |
| A17 | GRN | Constant power (+B) |

**CONNECTOR B (14P)**

| Cavity | Wire | Connects to |
|---|---|---|
| B1 | RED | XM receiver GA-NET (+B)* |
| B2 | YEL | XM receiver GA-NET (SYS ON)* |
| B3 | GRY | XM receiver (BUS SH (GA-NET))* |
| B4 | GRY | XM receiver (AUDIO SH (GA-NET))* |
| B5 | RED | XM receiver (AUDIO R+ (GA-NET))* |
| B6 | BLK | XM receiver (AUDIO L+ (GA-NET))* |
| B7 | ——— | Not used |
| B8 | ——— | Not used |
| B9 | LT BLU | XM receiver (BUS+ (GA-NET))* |
| B10 | PUR | XM receiver (BUS− (GA-NET))* |
| B11 | BRN | XM receiver (GA-NET GND)* |
| B12 | ——— | Not used |
| B13 | WHT | XM receiver (AUDIO R− (GA-NET))* |
| B14 | GRN | XM receiver (AUDIO R− (GA-NET))* |

*: With XM

**CONNECTOR C (28P)**

| Cavity | Wire | Connects to |
|---|---|---|
| C1 | ——— | Not used |
| C2 | ——— | Not used |
| C3 | PUR | Audio switch panel (ENCORDER−) |
| C4 | BLK | Audio switch panel (PNL DATA2) |
| C5 | YEL | Audio switch panel (PNL CE) |
| C6 | GRY | Audio switch panel (PNL SH1) |
| C7 | BRN | Audio switch panel (PNL 5V GND) |
| C8 | ORN | Audio-HVAC display unit (LCD BL−) |
| C9 | ——— | Not used |
| C10 | ——— | Not used |
| C11 | ——— | Not used |
| C12 | ——— | Not used |
| C13 | ——— | Not used |
| C14 | ——— | Not used |
| C15 | LT GRN | Climate control unit (SO AC2) |
| C16 | GRY | Audio switch panel (PNL SH2) |
| C17 | LT BLU | Audio switch panel (ENCORDER+) |
| C18 | RED | Audio switch panel (PNL DATA1) |
| C19 | GRN | Audio switch panel (PNL RST) |
| C20 | WHT | Audio switch panel (PNL CLK) |
| C21 | RED | Audio switch panel (PNL+5V) |
| C22 | GRN | Audio-HVAC display unit (LCD BL+) |
| C23 | ——— | Not used |
| C24 | ——— | Not used |
| C25 | ——— | Not used |
| C26 | ——— | Not used |
| C27 | ——— | Not used |
| C28 | ——— | Not used |



BACK

Protected by AR

**CONNECTOR D (32P)**

| Cavity | Wire | Connects to |
|---|---|---|
| D1 | ——— | Not used |
| D2 | ——— | Not used |
| D3 | BRN | Audio remote switch (GND) |
| D4 | ORN | Stereo amplifier (AMP MUTE) |
| D5 | ——— | Not used |
| D6 | ——— | Not used |
| D7 | BLK | Ground (G504) |
| D8 | PNK | Stereo amplifier (FL PRE−) |
| D9 | GRY | Stereo amplifier (SH FL GND) |
| D10 | RED | Stereo amplifier (FR PRE−) |
| D11 | PUR | Stereo amplifier (RL PRE−) |
| D12 | GRY | Stereo amplifier (SH RL GND) |
| D13 | YEL | Stereo amplifier (RR PRE−) |
| D14 | PNK | Stereo amplifier (SUBW PRE−) |
| D15 | GRY | Stereo amplifier (SH SUBW GND) |
| D16 | ——— | Not used |
| D17 | ——— | Not used |
| D18 | ——— | Not used |
| D19 | PNK | Audio remote switch (REMOTE) |
| D20 | ——— | Not used |
| D21 | ——— | Not used |
| D22 | ——— | Not used |
| D23 | YEL | Stereo amplifier (SWD +B) |
| D24 | BLU | Stereo amplifier (FL PRE+) |
| D25 | GRY | Stereo amplifier (SH RL GND) |
| D26 | GRN | Stereo amplifier (FR PRE+) |
| D27 | LT BLU | Stereo amplifier (RL PRE+) |
| D28 | GRY | Stereo amplifier (SH RR GND) |
| D29 | BRN | Stereo amplifier (RR PRE+) |
| D30 | BLU | Stereo amplifier (SUBW PRE+) |
| D31 | ——— | Not used |
| D32 | ——— | Not used |

**CONNECTOR E (3P)**

| Cavity | Wire | Connects to |
|---|---|---|
| E1 | ——— | • AM/FM/XM antenna (RF IN)* <br> • AM/FM antenna (RF IN) |
| E2 | ——— | • AM/FM/XM antenna (RF SH)* <br> • AM/FM antenna (RF SH) |
| E3 | ——— | • AM/FM/XM antenna (ANT +B)* <br> • AM/FM antenna (ANT +B) |

*: With XM

(cont'd)

Protected by AR



## System Description (cont'd)

### Stereo Amplifier Connector for Inputs and Outputs

When replacing a stereo amplifier connector, match the wires to the cavities listed in the following tables.

**With ELS Audio System**

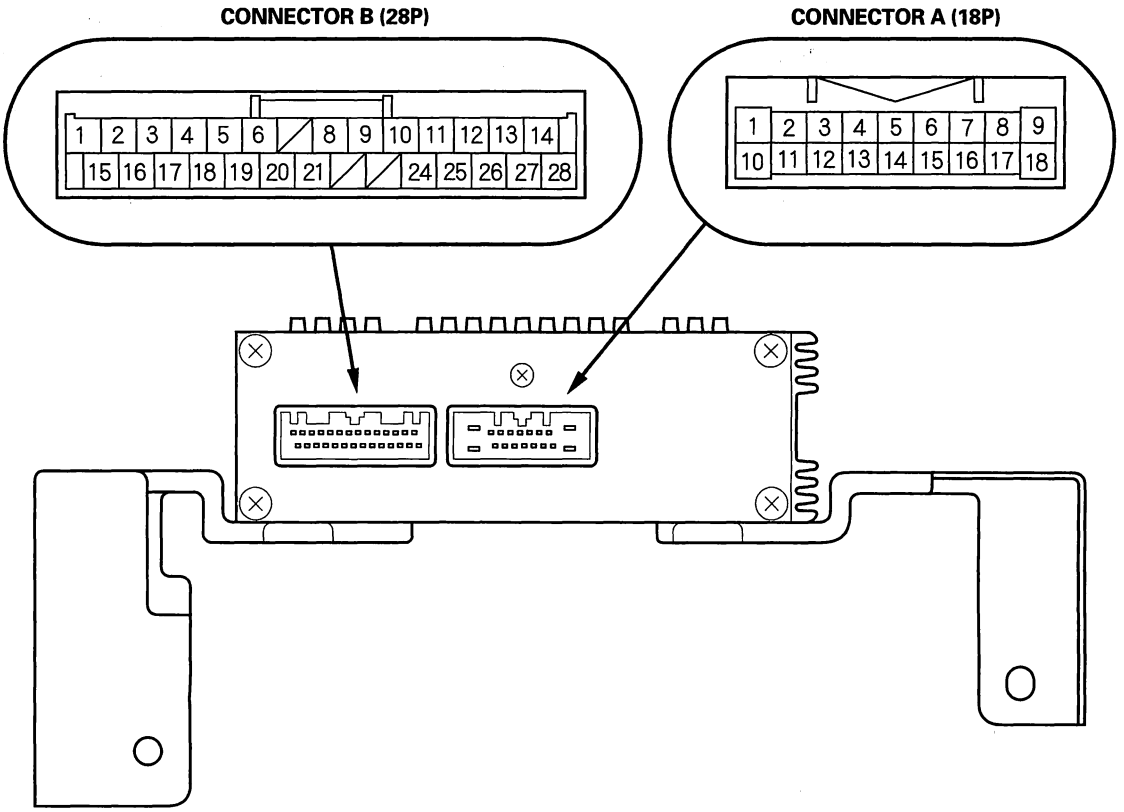




BACK

Protected by AR

**CONNECTOR A (18P)**

| Cavity | Wire | Connects to |
|---|---|---|
| A1 | RED | Subwoofer (SUB WF−) |
| A2 | PUR | Front center speaker (CTR SP−) |
| A3 | ORN | Right rear door speaker (RR SP−) |
| A4 | BRN | Left rear door speaker (RL SP−) |
| A5 | WHT | Right rear satellite speaker (SAT R SP−) |
| A6 | BRN | Front passenger's door speaker, Right front door tweeter (FR SP−) |
| A7 | LT BLU | Driver's door speaker, Left front door tweeter (FL SP−) |
| A8 | GRY | Left rear satellite speaker (SAT L SP−) |
| A9 | BLK | Ground (G503) |
| A10 | GRN | Subwoofer (SUB WF+) |
| A11 | PNK | Front center speaker (CTR SP+) |
| A12 | BLU | Right rear door speaker (RR SP+) |
| A13 | YEL | Left rear door speaker (RL SP+) |
| A14 | YEL | Right rear satellite speaker (SAT R SP+) |
| A15 | GRY | Front passenger's door speaker, Right front door tweeter (FR SP+) |
| A16 | LT GRN | Driver's door speaker, Left front door tweeter (FL SP+) |
| A17 | ORN | Left rear satellite speaker (SAT L SP+) |
| A18 | BLU | Subwoofer (+B) |

**CONNECTOR B (28P)**

| Cavity | Wire | Connects to |
|---|---|---|
| B1 | RED | Audio unit (ELS DATA−) |
| B2 | BLK | Ground (G504) |
| B3 | YEL | Audio unit (SWD +B) |
| B4 | LT GRN | Audio unit (CTR PRE+) |
| B5 | GRY | Audio unit (SH CTR SUBW GND) |
| B6 | PNK | Audio unit (SUBW PRE+) |
| B7 | ——— | Not used |
| B8 | GRY | Navigation unit (NAVI SH GND) |
| B9 | RED | Navigation unit (NAVI GND) |
| B10 | WHT | Audio unit (FL PRE+) |
| B11 | RED | Audio unit (FR PRE+) |
| B12 | GRY | Audio unit (SH FR-FL GND) |
| B13 | YEL | Audio unit (RL PRE+) |
| B14 | ORN | Audio unit (RR PRE+) |
| B15 | GRN | Audio unit (ELS DATA+) |
| B16 | GRY | Audio unit (ELS SH GND) |
| B17 | ORN | Audio unit (AMP MUTE) |
| B18 | BRN | Audio unit (CTR PRE−) |
| B19 | LT BLU | Audio unit (SUBW PRE−) |
| B20 | LT GRN | Subwoofer (SUB WF CONT) |
| B21 | GRN | Navigation unit (NAVI Lch) |
| B22 | ——— | Not used |
| B23 | ——— | Not used |
| B24 | BLK | Audio unit (FL PRE−) |
| B25 | GRN | Audio unit (FR PRE−) |
| B26 | GRY | Audio unit (SH RR-RL GND) |
| B27 | PUR | Audio unit (RL PRE−) |
| B28 | BLU | Audio unit (RR PRE−) |

(cont'd)

Protected by AR



## System Description (cont'd)

### Stereo Amplifier Connector for Inputs and Outputs

When replacing a stereo amplifier connector, match the wires to the cavities listed in the following tables.

**With Premium Audio System**

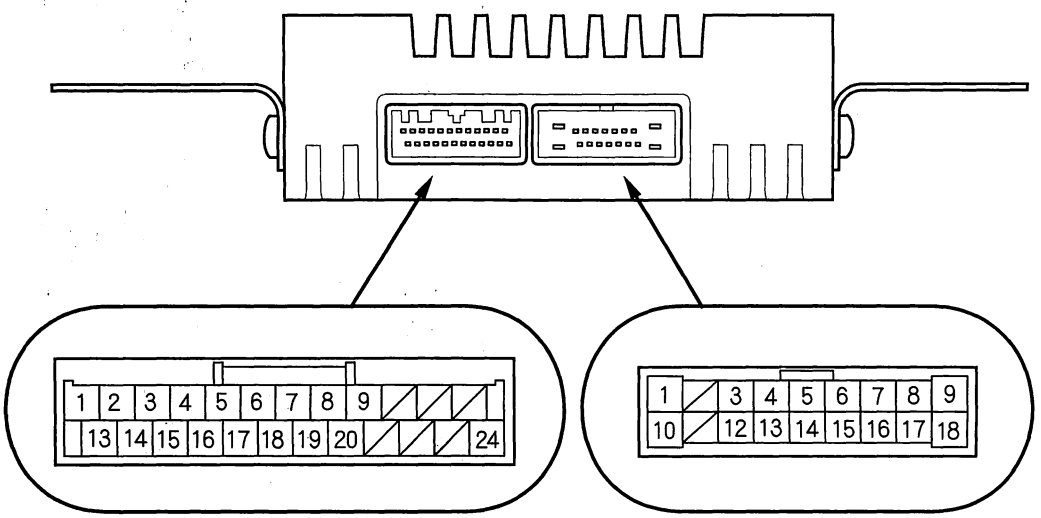


CONNECTOR B (24P) CONNECTOR A (18P)



BACK

Protected by AR

**CONNECTOR A (18P)**

| Cavity | Wire | Connects to |
|---|---|---|
| A1 | RED | Subwoofer (SUBW SP−) |
| A2 | ——— | Not used |
| A3 | ORN | Right rear door speaker (RR SP−) |
| A4 | BRN | Left rear door speaker (RL SP−) |
| A5 | WHT | Right front door tweeter (FR TW SP−) |
| A6 | BRN | Front passenger's door speaker (FR SP−) |
| A7 | LT BLU | Driver's door speaker (FL SP−) |
| A8 | WHT | Left front door tweeter (FT TW SP−) |
| A9 | BLK | Ground (G503) |
| A10 | GRN | Subwoofer (SUBW SP+) |
| A11 | ——— | Not used |
| A12 | BLU | Right rear door speaker (RR SP+) |
| A13 | YEL | Left rear door speaker (RL SP+) |
| A14 | RED | Right front door tweeter (FR TW SP+) |
| A15 | GRY | Front passenger's door speaker (FR SP+) |
| A16 | LT GRN | Driver's door speaker (FL SP+) |
| A17 | RED | Left front door tweeter (FL TW SP+) |
| A18 | BLU | No. 31 (20 A) fuse in the under-dash fuse/relay box (+B) |

**CONNECTOR B (24P)**

| Cavity | Wire | Connects to |
|---|---|---|
| B1 | BLK | Ground (G504) |
| B2 | PNK | Audio unit (FL PRE−) |
| B3 | GRY | Audio unit (SH FL GND) |
| B4 | PUR | Audio unit (RL PRE−) |
| B5 | RED | Audio unit (FR PRE−) |
| B6 | GRY | Audio unit (SH FR GND) |
| B7 | YEL | Audio unit (RR PRE−) |
| B8 | PNK | Audio unit (SUBW PRE−) |
| B9 | GRY | Audio unit (SH SUBW GND) |
| B10 | ——— | Not used |
| B11 | ——— | Not used |
| B12 | ——— | Not used |
| B13 | ORN | Audio unit (AMP MUTE) |
| B14 | BLU | Audio unit (FL PRE+) |
| B15 | GRY | Audio unit (SH RL GND) |
| B16 | LT BLU | Audio unit (RL PRE+) |
| B17 | GRN | Audio unit (FR PRE+) |
| B18 | GRY | Audio unit (RR PRE+) |
| B19 | BRN | Audio unit (SH RR GND) |
| B20 | BLU | Audio unit (SUBW PRE+) |
| B21 | ——— | Not used |
| B22 | ——— | Not used |
| B23 | ——— | Not used |
| B24 | YEL | Audio unit (SWD +B) |

(cont'd)

Protected by AR



## System Description (cont'd)

### AcuraLink Control Unit (XM Receiver) Connector for Inputs and Outputs (With AcuraLink)

When replacing an AcuraLink control unit (XM receiver) connector, match the wires to the cavities listed in the following tables.

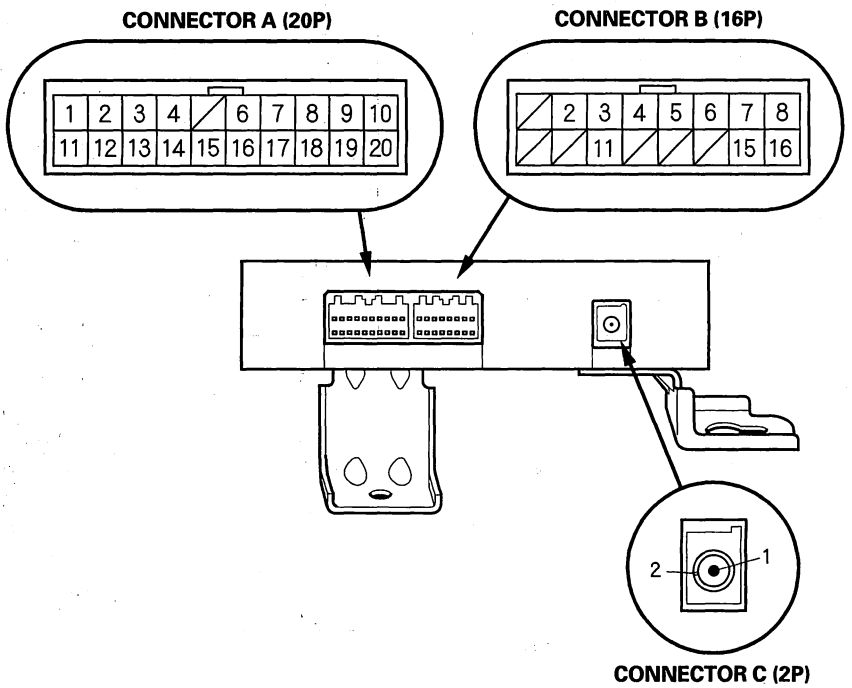




BACK

Protected by AR

**CONNECTOR A (20P)**

| Cavity | Wire | Connects to |
|---|---|---|
| A1 | GRN | No. 23 (10 A) fuse in the under-hood fuse/relay box (+B) |
| A2 | PUR | No. 35 (7.5 A) fuse in the under-dash fuse/relay box (ACC) |
| A3 | GRN | Navigation unit (NAVI COMM 3) |
| A4 | RED | Navigation unit (NAVI COMM 1) |
| A5 | ——— | Not used |
| A6 | WHT | Communication bus line (CAN-HI) |
| A7 | LT BLU | Audio unit, Navigation display unit (BUS+ (GA-NET)) |
| A8 | GRY | Audio unit (AUDIO SH (GA-NET)) |
| A9 | BLK | Audio unit (AUDIO L+ (GA-NET)) |
| A10 | RED | Audio unit (AUDIO R+ (GA-NET)) |
| A11 | BLK | Ground (G505) |
| A12 | BRN | No. 10 (7.5 A) fuse in the under-dash fuse/relay box (IG1) |
| A13 | BLK | Navigation unit (NAVI COMM 4) |
| A14 | WHT | Navigation unit (NAVI COMM 2) |
| A15 | GRY | Navigation unit (NAVI COMM SH) |
| A16 | RED | Communication bus line (CAN LO) |
| A17 | PUR | Audio unit, Navigation display unit (BUS− (GA-NET)) |
| A18 | GRY | Audio unit, Navigation display unit (BUS SH (GA-NET)) |
| A19 | GRN | Audio unit (AUDIO L− (GA-NET)) |
| A20 | WHT | Audio unit (AUDIO R− (GA-NET)) |

**CONNECTOR B (16P)**

| Cavity | Wire | Connects to |
|---|---|---|
| B1 | ——— | Not used |
| B2 | GRY | Audio unit, HandsFreeLink control unit (TELM SIG SH) |
| B3 | GRN | Audio unit, HandsFreeLink control unit (TELM SIG+) |
| B4 | PUR | Audio unit (HIP MUTE) |
| B5 | PNK | Communication bus line (B-CAN) |
| B6 | GRY | HandsFreeLink control unit (HFL COMM SH) |
| B7 | WHT | HandsFreeLink control unit (HFL COMM 3) |
| B8 | GRN | HandsFreeLink control unit (HFL COMM 1) |
| B9 | ——— | Not used |
| B10 | ——— | Not used |
| B11 | RED | Audio unit, HandsFreeLink control unit (TELM SIG−) |
| B12 | ——— | Not used |
| B13 | ——— | Not used |
| B14 | ——— | Not used |
| B15 | RED | HandsFreeLink control unit (HFL COMM 4) |
| B16 | BLK | HandsFreeLink control unit (HFL COMM 2) |

**CONNECTOR C (2P)**

| Cavity | Wire | Connects to |
|---|---|---|
| C1 | ——— | AM/FM/XM antenna (SAT/TER) |
| C2 | ——— | AM/FM/XM antenna (SAT/TER SH) |

(cont'd)

Protected by AR



## System Description (cont'd)

### XM Receiver Connector for Inputs and Outputs (USA models without AcuraLink)

When replacing an XM receiver connector, match the wires to the cavities listed in the following tables.

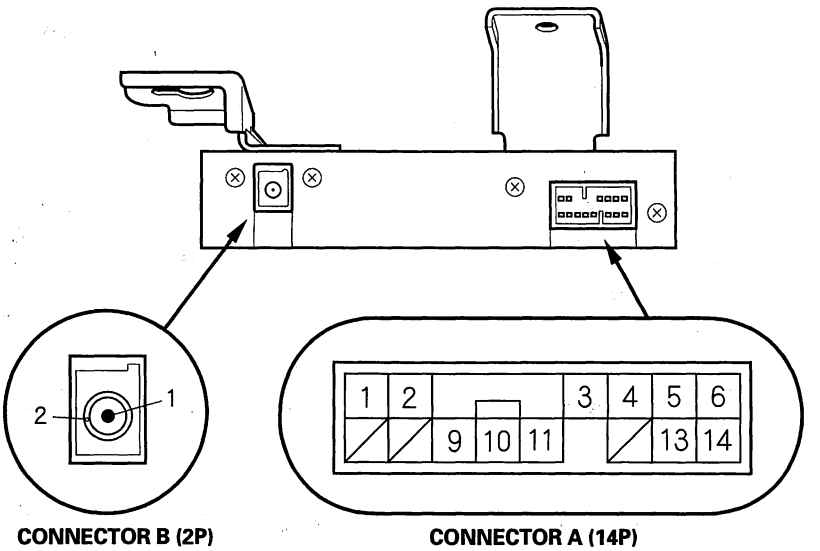


**CONNECTOR A (14P)**

| Cavity | Wire | Connects to |
|---|---|---|
| A1 | RED | Audio unit (+B) |
| A2 | YEL | Audio unit (SYS ON) |
| A3 | GRY | Audio unit (BUS SH (GA-NET)) |
| A4 | GRY | Audio unit (AUDIO SH (GA-NET)) |
| A5 | RED | Audio unit (AUDIO R+ (GA-NET)) |
| A6 | BLK | Audio unit (AUDIO L+ (GA-NET)) |
| A7 | ——— | Not used |
| A8 | ——— | Not used |
| A9 | LT BLU | Audio unit (BUS+ (GA-NET)) |
| A10 | PUR | Audio unit (BUS− (GA-NET)) |
| A11 | BRN | Audio unit (GND) |
| A12 | ——— | Not used |
| A13 | WHT | Audio unit (AUDIO R− (GA-NET)) |
| A14 | GRN | Audio unit (AUDIO L− (GA-NET)) |

**CONNECTOR B (2P)**

| Cavity | Wire | Connects to |
|---|---|---|
| B1 | ——— | AM/FM/XM antenna (SAT/TER) |
| B2 | ——— | AM/FM/XM antenna (SAT/TER SH) |



BACK

Protected by AR

## Audio Switch Panel Connector for Inputs and Outputs (Without navigation)

When replacing an audio switch panel connector, match the wires to the cavities listed in the following tables.

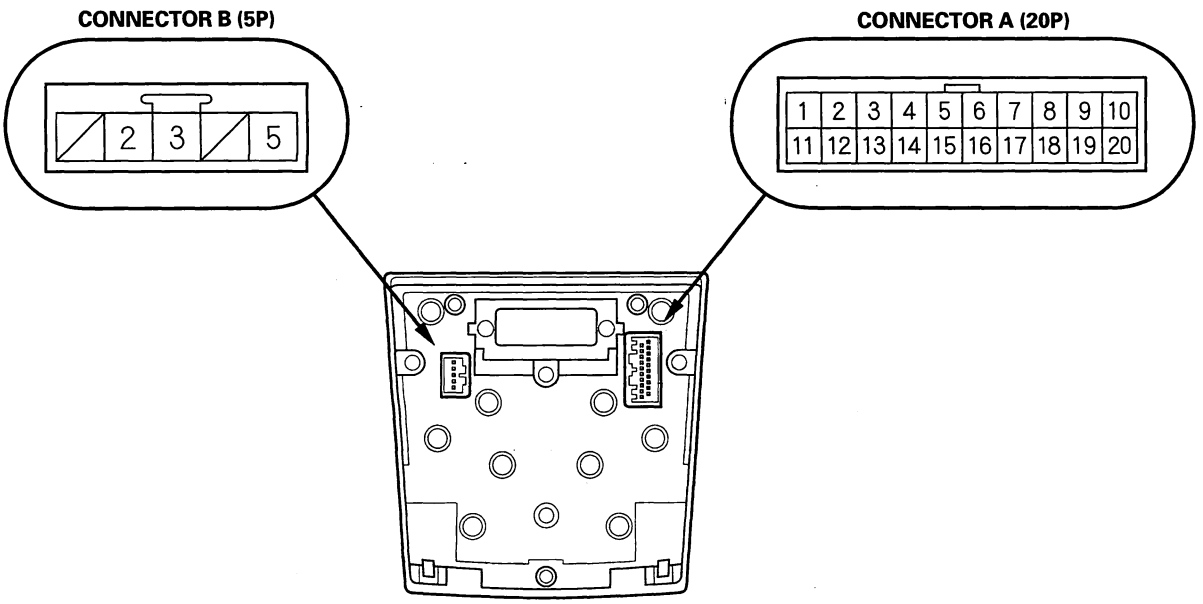


**CONNECTOR A (20P)**

| Cavity | Wire | Connects to |
|---|---|---|
| A1 | BRN | Audio unit (PNL 5V GND) |
| A2 | PNK | Audio-HVAC display unit (LCD 5V GND) |
| A3 | GRY | Audio-HVAC display unit (LCD SH) |
| A4 | WHT | Audio unit (PNL CLK) |
| A5 | BLK | Audio unit (PNL DATA 2) |
| A6 | RED | Audio unit (PNL DATA 1) |
| A7 | YEL | Audio unit (PNL CE) |
| A8 | GRN | Audio unit (PNL RST) |
| A9 | GRY | Audio unit (PNL SH1) |
| A10 | BLK | Ground (G502) |
| A11 | RED | Audio unit (PNL +5V) |
| A12 | LT GRN | Audio-HVAC display unit (LCD +5V) |
| A13 | BLK | Audio-HVAC display unit (LCD RST) |
| A14 | RED | Audio-HVAC display unit (LCD CE) |
| A15 | WHT | Audio-HVAC display unit (LCD DATA 1) |
| A16 | GRN | Audio-HVAC display unit (LCD CLK) |
| A17 | BLU | From passenger's cut off indicator (PTT) |
| A18 | RED | Dash lights brightness controller (ILL− BULB) |
| A19 | WHT | From passenger's cut off indicator (IG1) |
| A20 | GRY | No. 10 (7.5 A) fuse in the under-dash fuse/relay box (ILL+) |

**CONNECTOR B (5P)**

| Cavity | Wire | Connects to |
|---|---|---|
| B1 | ——— | Not used |
| B2 | GRY | Audio unit (PNL SH2) |
| B3 | PUR | Audio unit (ENCORDER−) |
| B4 | ——— | Not used |
| B5 | LT BLU | Audio unit (ENCORDER+) |

(cont'd)

Protected by AR



## System Description (cont'd)

### Audio-HVAC Subdisplay Unit Connector for Inputs and Outputs (With navigation)

When replacing an audio-HVAC subdisplay unit connector, match the wires to the cavities listed in the following table.

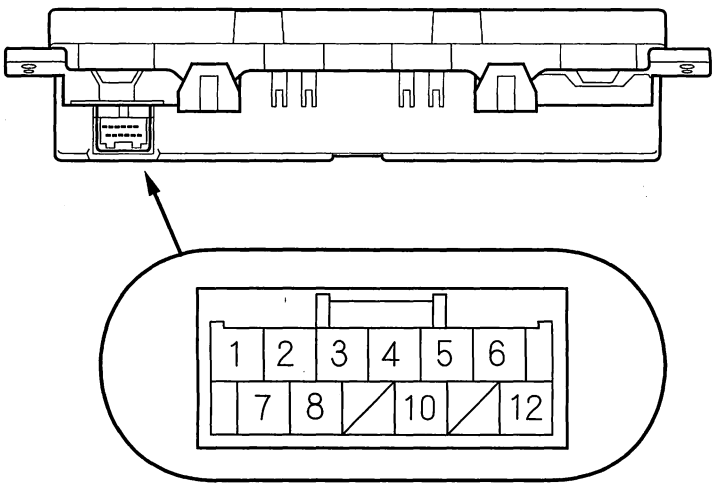


| Cavity | Wire | Connects to |
|---|---|---|
| 1 | GRY | Audio unit (PNL SH1) |
| 2 | YEL | Audio unit (PNL DATA1) |
| 3 | BLU | Audio unit (PNL RST) |
| 4 | ORN | Audio unit (PNL CE) |
| 5 | PUR | Audio unit (PNL CLK) |
| 6 | BLK | Ground (G502) |
| 7 | ORN | Audio unit (LCD BL−) |
| 8 | GRN | Audio unit (LCD BL+) |
| 9 | ——— | Not used |
| 10 | RED | Audio unit (PNL +5V) |
| 11 | ——— | Not used |
| 12 | BRN | Audio unit (PNL 5V GND) |



BACK

Protected by AR

## Audio-HVAC Display Unit Connector for Inputs and Outputs (Without navigation)

When replacing an audio-HVAC display unit connector, match the wires to the cavities listed in the following tables.

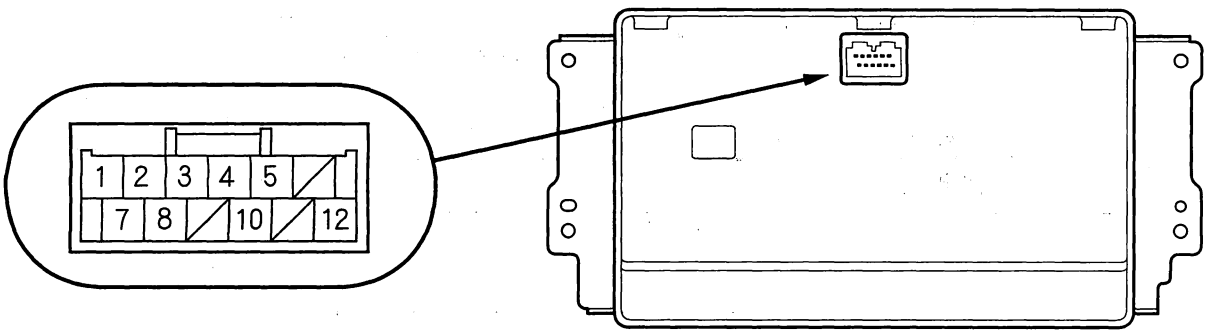


| Cavity | Wire | Connects to |
|---|---|---|
| 1 | GRY | Audio switch panel (LCD SH) |
| 2 | WHT | Audio switch panel (LCD DATA 1) |
| 3 | BLK | Audio switch panel (LCD RST) |
| 4 | RED | Audio switch panel (LCD CE) |
| 5 | GRN | Audio switch panel (LCD CLK) |
| 6 | ——— | Not used |
| 7 | ORN | Audio unit (LCD BL−) |
| 8 | GRN | Audio unit (LCD BL+) |
| 9 | ——— | Not used |
| 10 | LT GRN | Audio switch panel (LCD +5V) |
| 11 | ——— | Not used |
| 12 | PNK | Audio switch panel (LCD 5V GND) |

Protected by AR

# Audio System

## Circuit Diagram

### With ELS Audio System

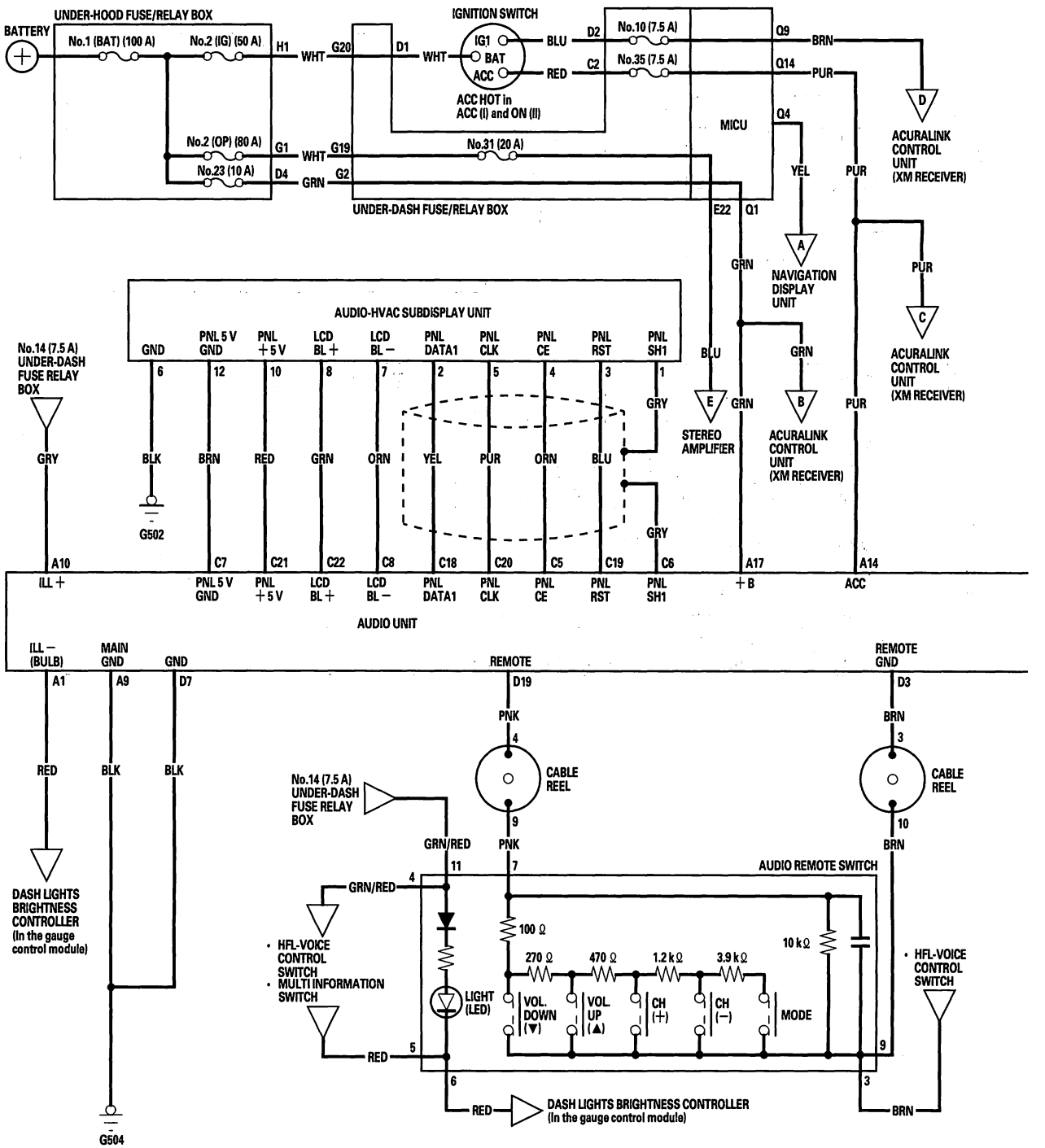




BACK

Protected by AR

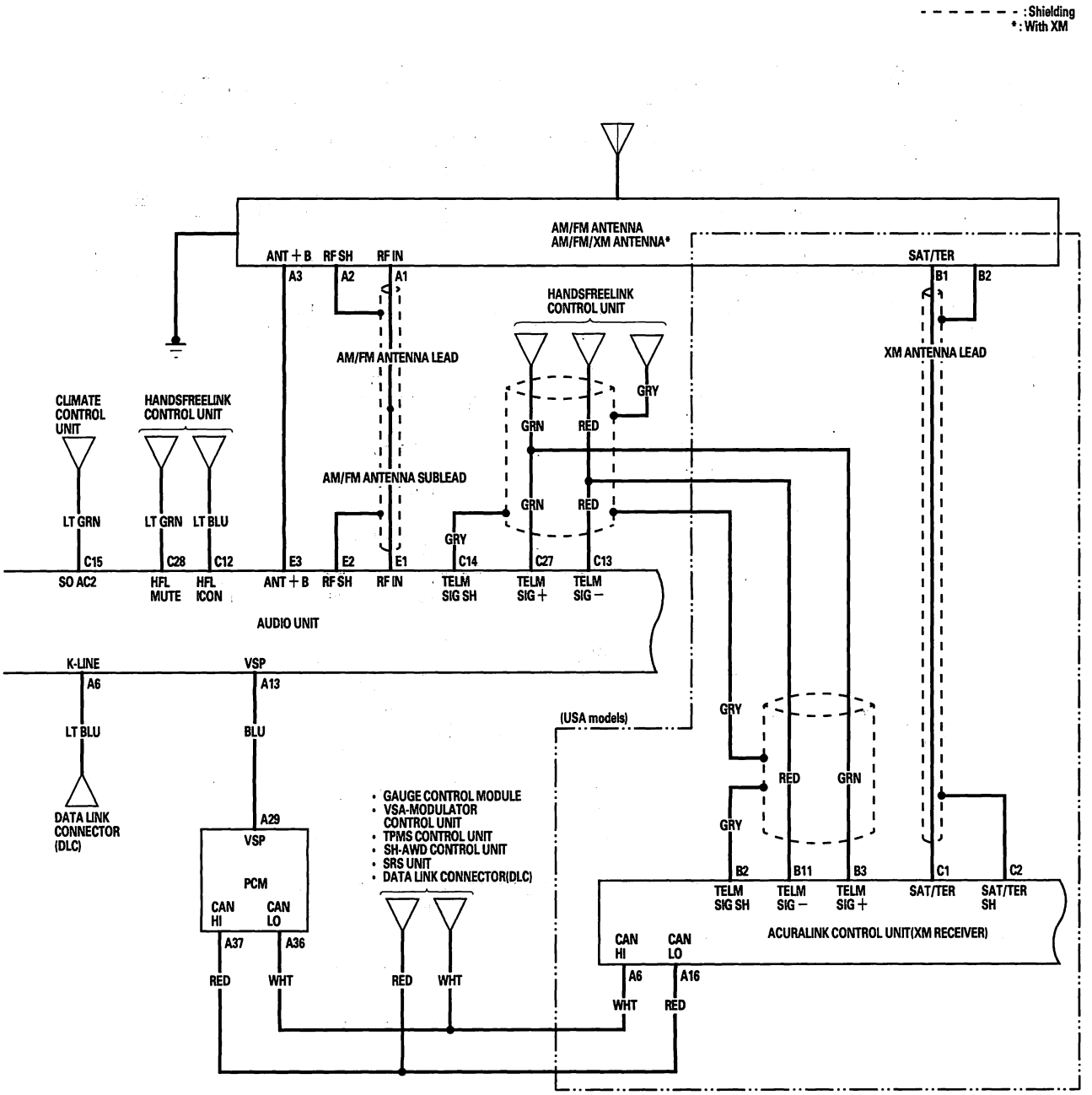


(cont'd)

Protected by AR

# Audio System

## Circuit Diagram (cont'd)

### With ELS Audio System

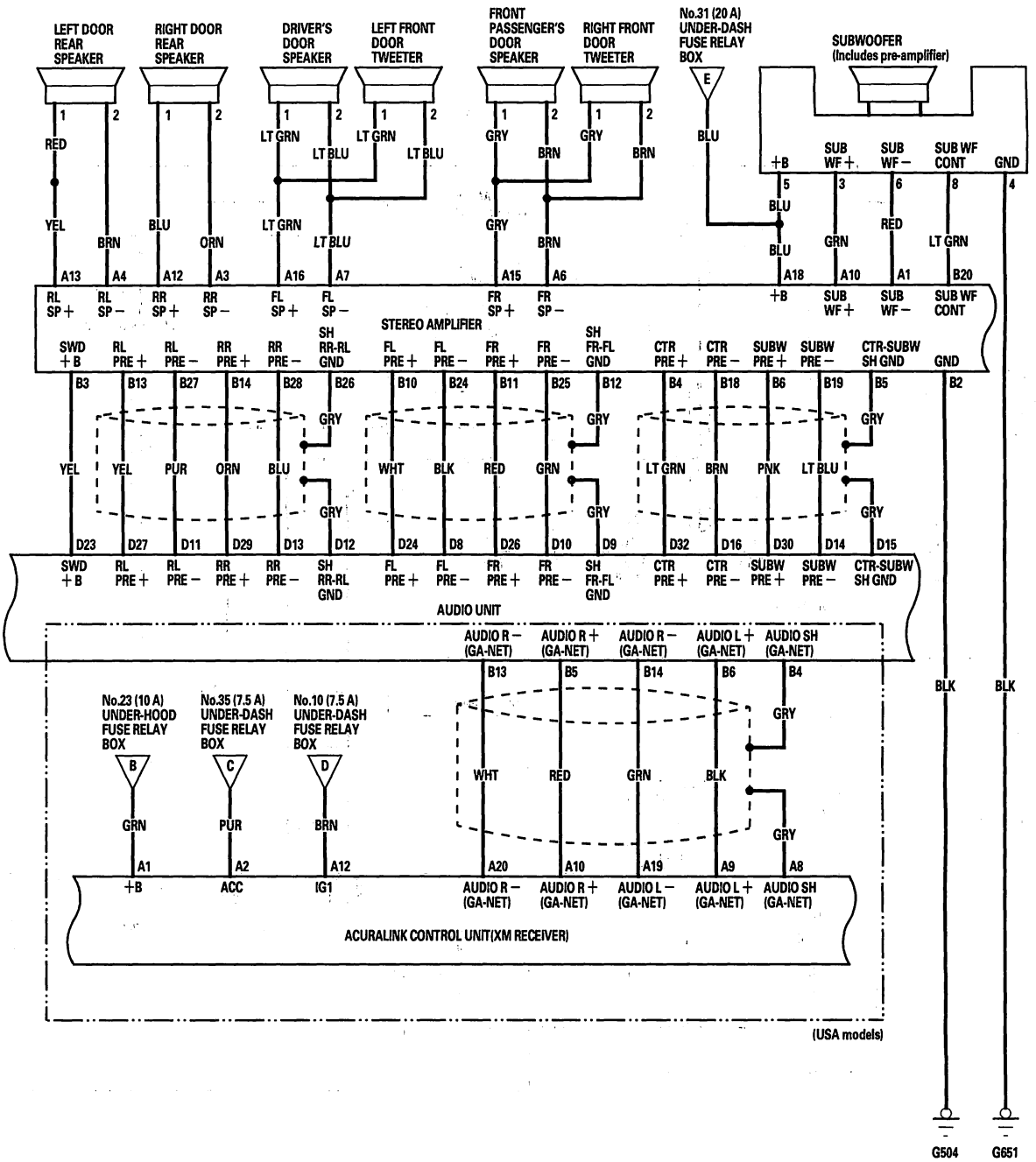




BACK

Protected by AR

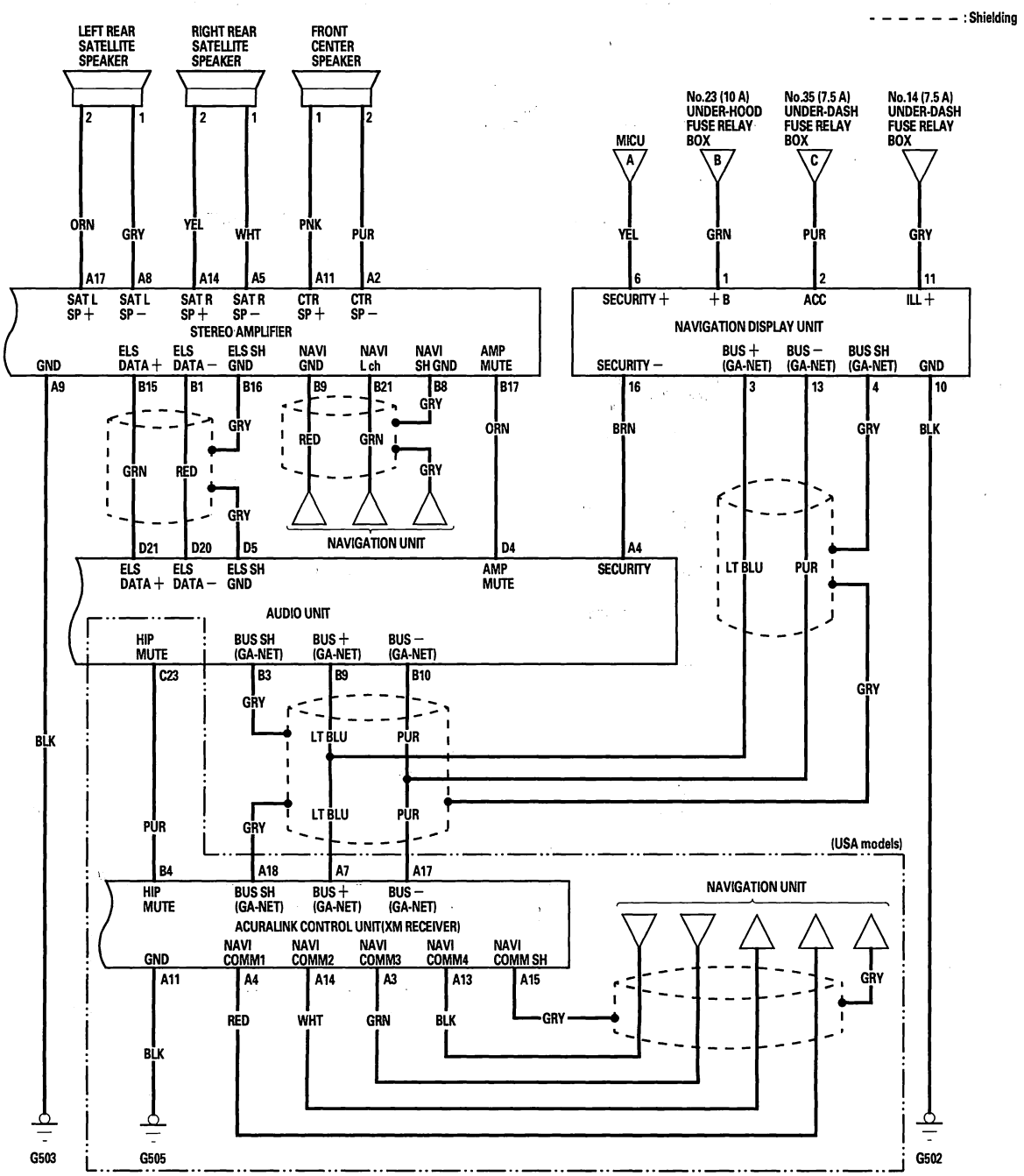


(cont'd)

Protected by AR



## Circuit Diagram (cont'd)

### With Premium Audio System

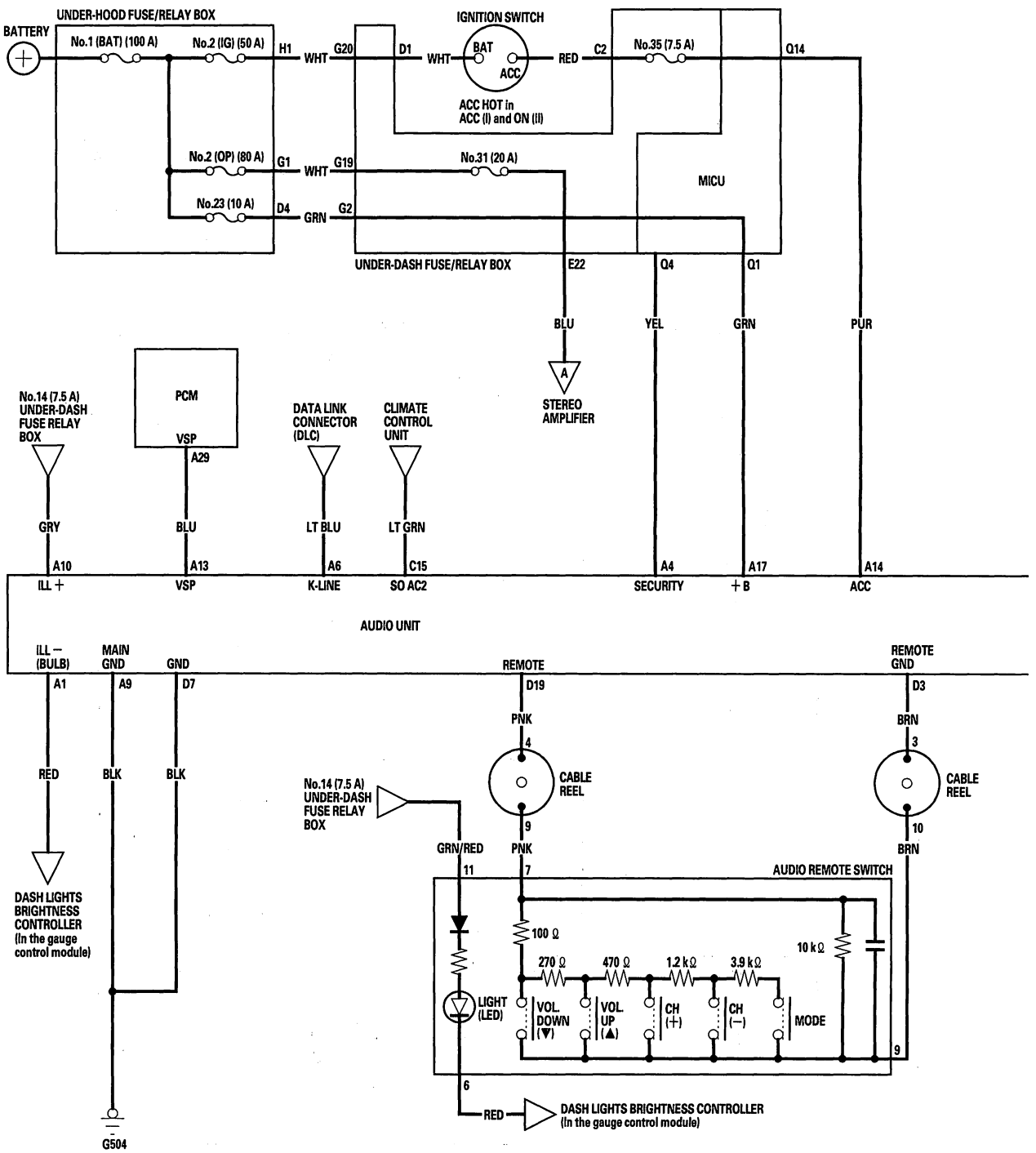




BACK

Protected by AR

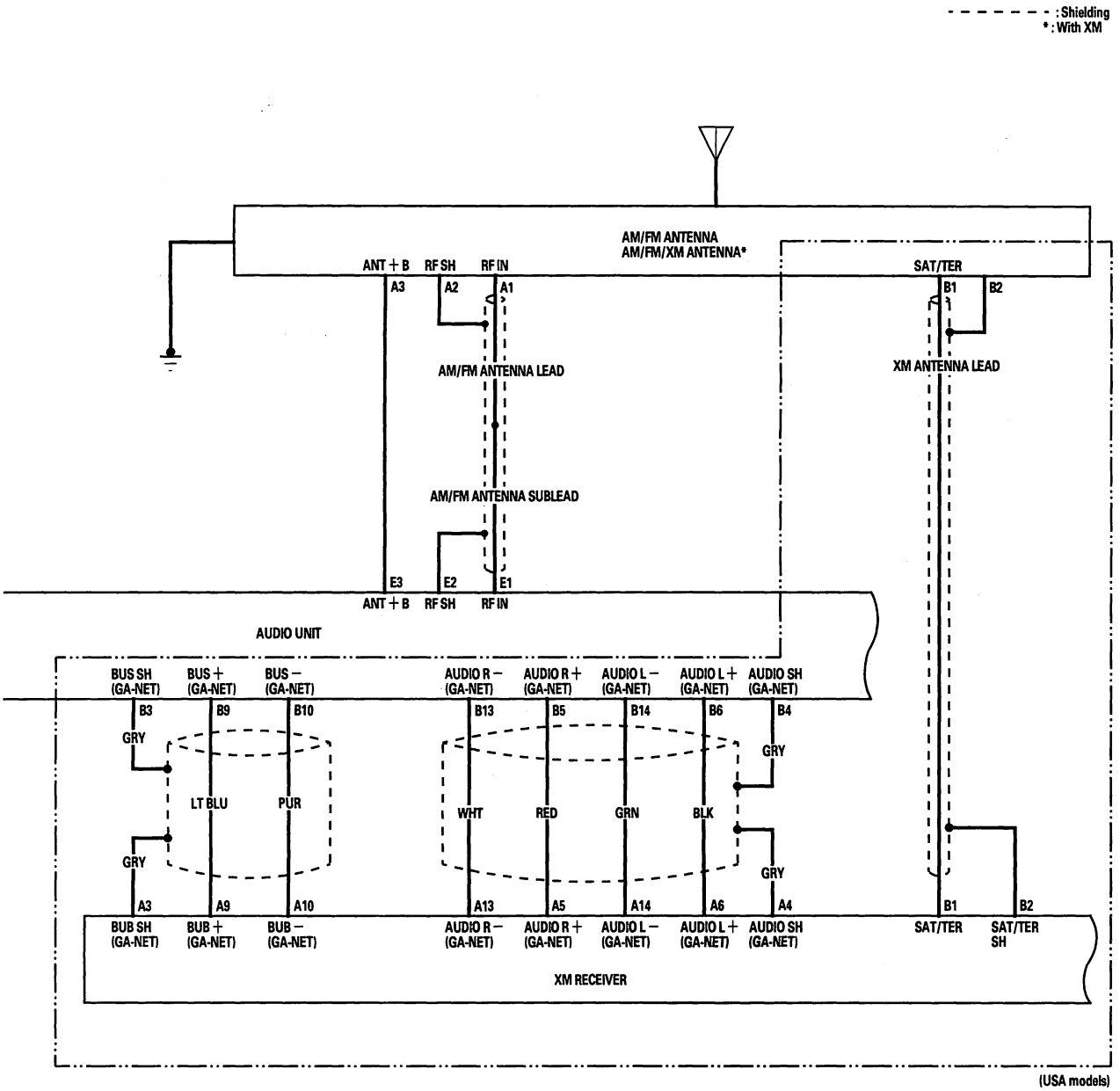


(USA models)

(cont'd)

BACK

Protected by AR

# Audio System

## Circuit Diagram (cont'd)

### With Premium Audio System

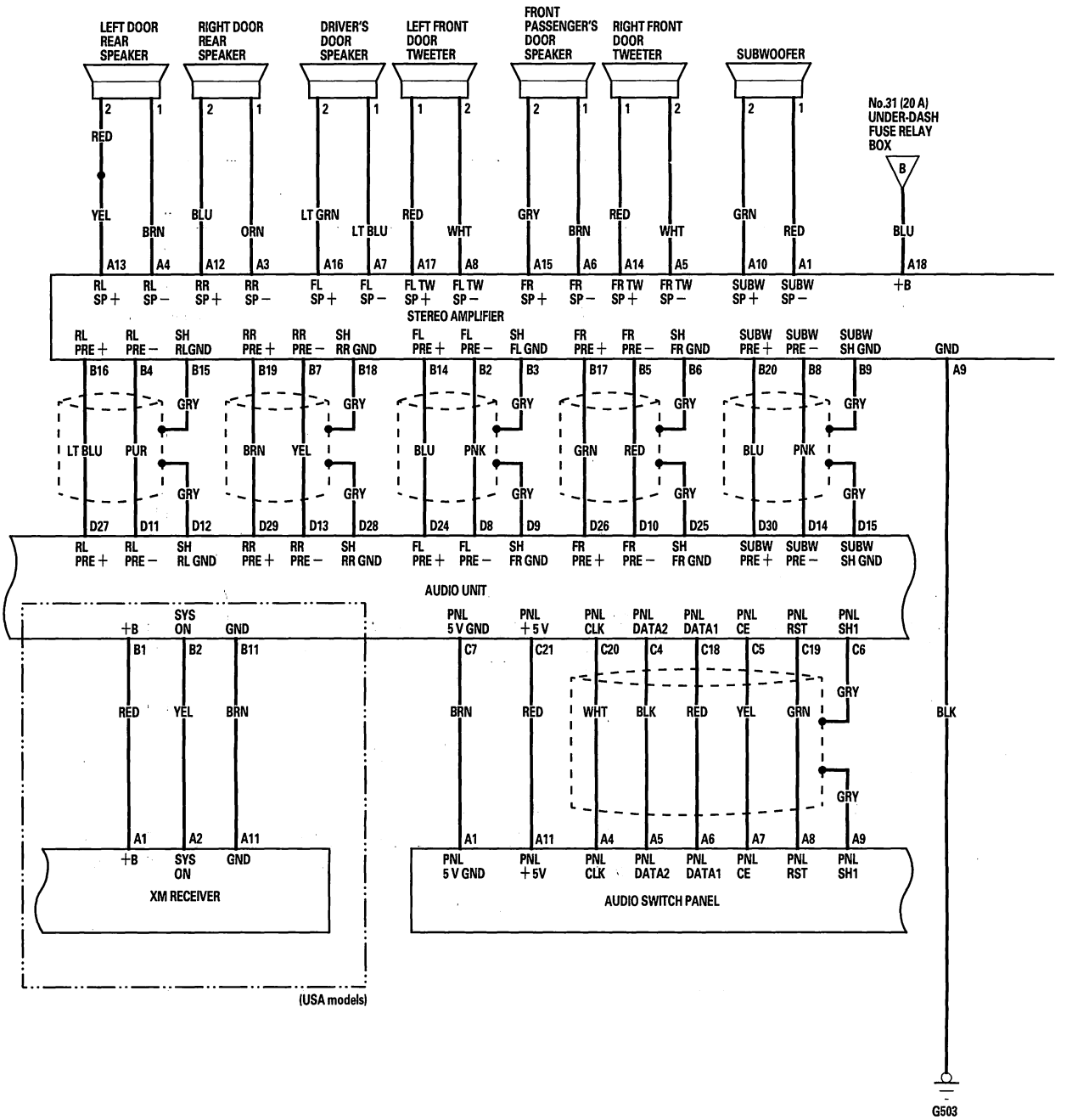




BACK

Protected by AR

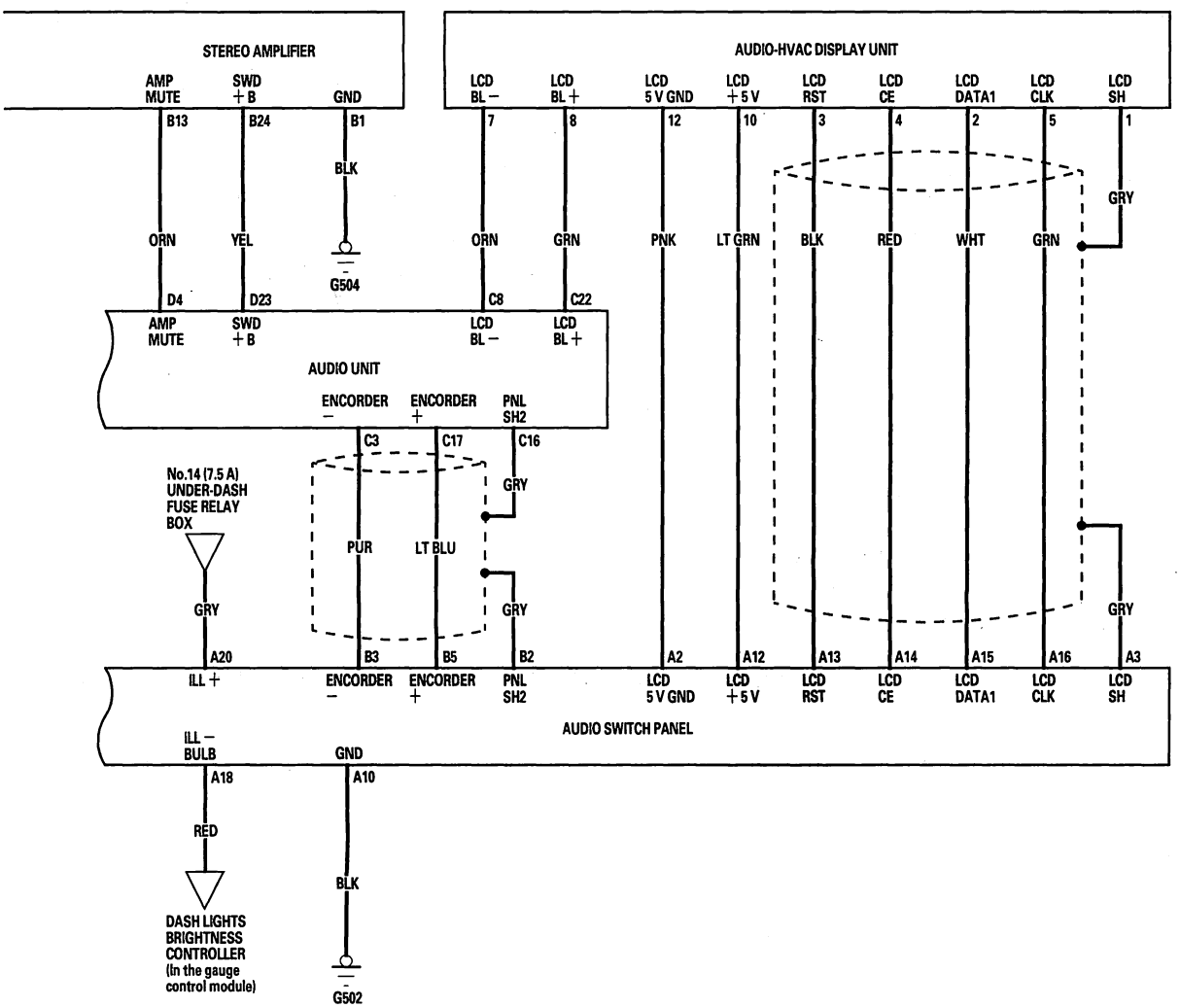


BACK

Protected by AR

# Audio System

## Self-diagnostic Function

The audio system has a self-diagnostic function.

### How to check for audio system condition

1. Turn the ignition switch to the ACC (I) or ON (II).
2. Push and hold the "No. 1" and "No. 6" buttons. While holding the buttons, push the "PWR" knob to ON. Release the buttons and the self-diagnostic function will begin.

**With ELS audio system**

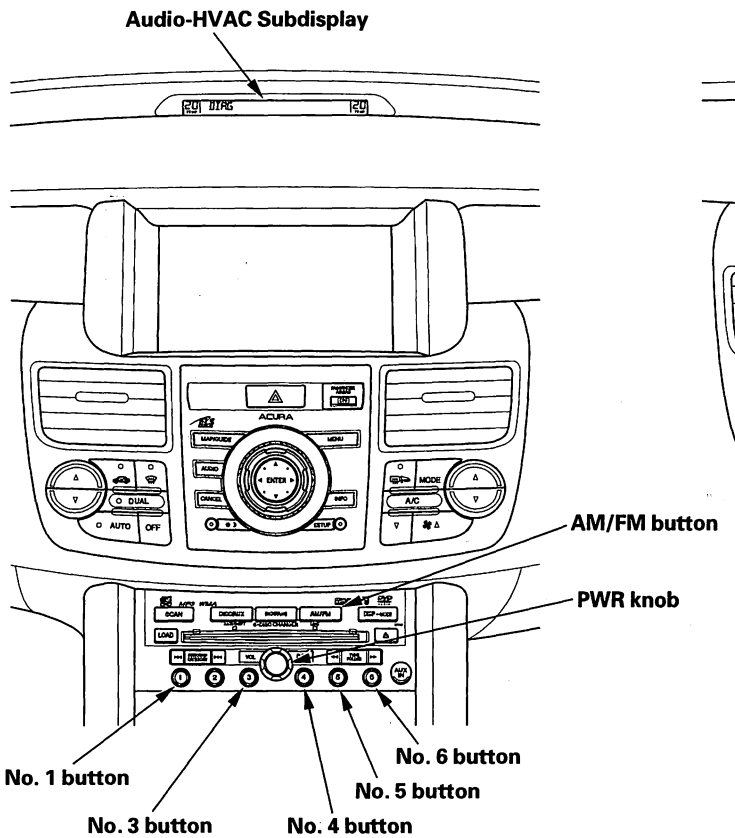


**With premium audio system**

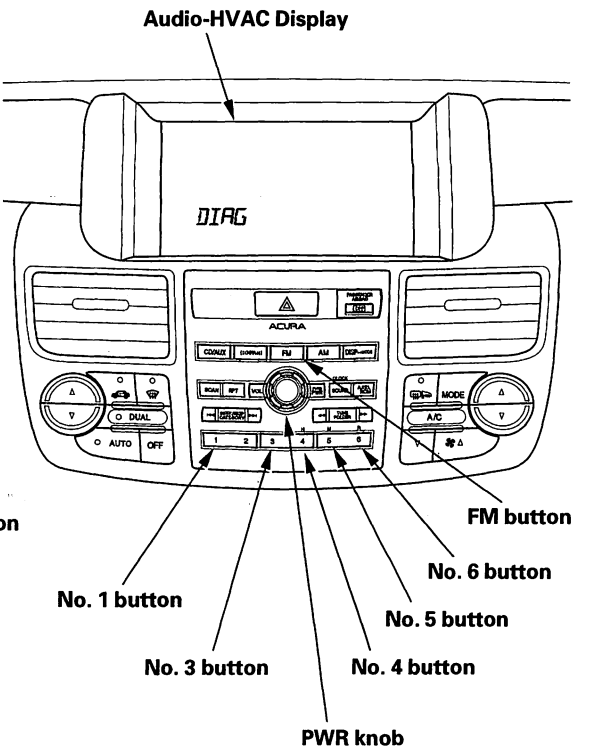


3. By pressing a preset button, the input will trigger the diagnostic mode that is assigned to that preset switch.

   **"No. 3" button**
   Entire LCD lighting/light-out mode: Turns on/off the entire LCD to show the presence or absence of an LCD failure.

   **"No. 4" button**
   Duty (for the Illumination dim) indication mode: Indicates the duty for the Illumination dim.

   **"No. 5" button**
   Vehicle speed pulse indication mode: Indicates the Vehicle speed pulse.

   **"AM/FM" or "FM" button (Push and hold 5 sec.)**
   Reception level check mode: Indicates the reception level. When entering the reception level check mode, the AM/FM button or FM button is used to change the main/sub antenna.



BACK

Protected by AR

4. The self-diagnostic function will end when you turn the audio unit off, or turn the ignition switch off.

   NOTE: Any other diagnostic screens shown are for the audio manufactures purpose only.

**Display Specifications**

**Entry LCD lighting (No. 3 button)**

**With navigation**

**Without navigation**

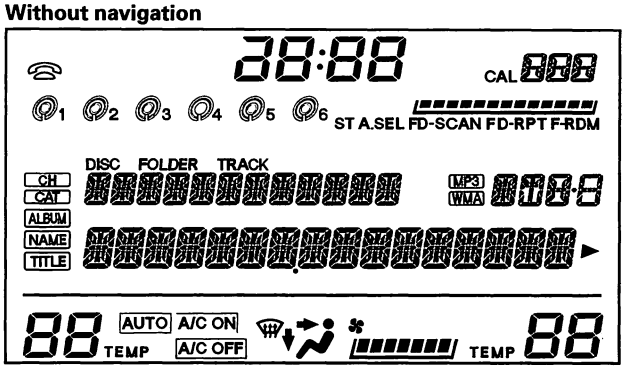


**Duty (for the illumination) indication (No. 4 button)**

**With navigation**

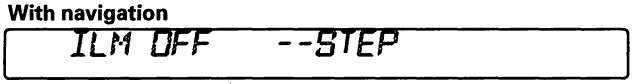


**Without navigation**

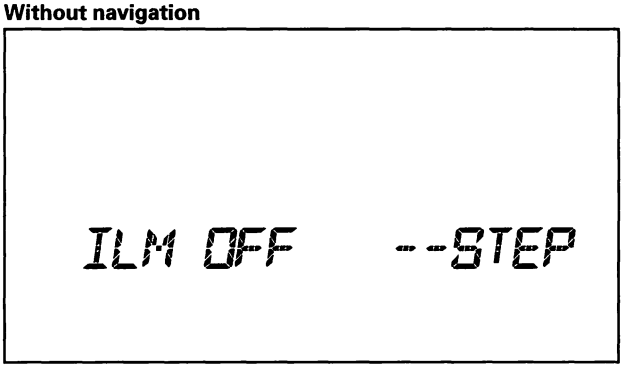


**Reception level indication (AM/FM or FM button)**

**With navigation**

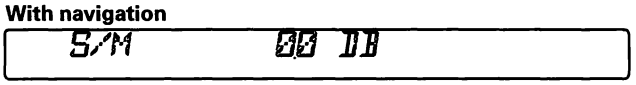


**Without navigation**

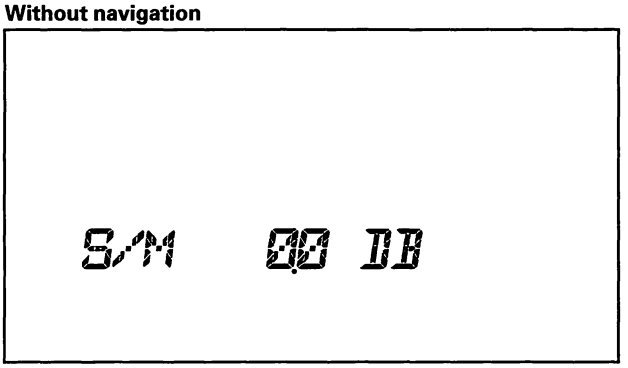


(cont'd)

Protected by AR



## Self-diagnostic Function (cont'd)

**Entry LCD lights-outs (No. 3 button)**

**With navigation**

**Without navigation**

**Vehicle speed pulse indication (No. 5 button)**

**With navigation**

VSP 0HZ 0KM

**Without navigation**

VSP 0HZ 0KM



BACK

Protected by AR

## Speaker Check Mode

1. Turn the ignition switch to the ACC (I) or ON (II).

2. Push and hold the "No. 1" and "No. 3" buttons. While holding the buttons, push the "PWR" knob to ON. Release the buttons and the speaker check mode will begin. Low-Frequency hum should sound for one speaker.

3. Each time you press the "SEEK/SKIP" button, the speaker outputs a beep sound in the following order.

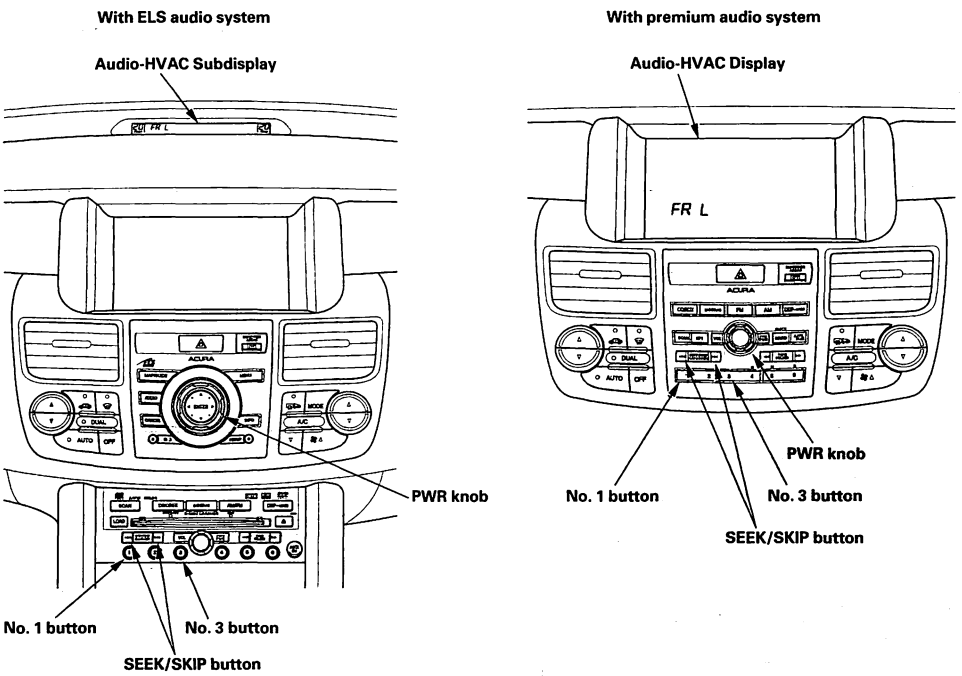


**Display Specifications**

(|◀◀) is pressed: ①→②→③→④→⑤→⑥→⑦
(▶▶|) is pressed: ①→⑦→⑥→⑤→④→③→②

| | Speaker | Displayed Segments | Remarks |
|---|---|---|---|
| ① | Driver's Door Speaker and Tweeter | FR L | |
| ② | Front Center Speaker | FR CNT | Applicable to the ELS audio system |
| ③ | Front Passenger's Door Speaker and Tweeter | FR R | |
| ④ | Right Rear Door Speaker and Satellite Speaker | RR R | Rear right satellite speaker is applicable to the ELS audio system |
| ⑤ | Subwoofer | SW | |
| ⑥ | Left Rear Door Speaker and Satellite Speaker | RR L | Rear left satellite speaker is applicable to the ELS audio system |
| ⑦ | All Speakers | ALL | |

NOTE: Any other diagnostic screens shown are for the audio manufactures purpose only.

4. The speaker check mode will end when you turn the audio unit off, or turn the ignition switch off.

(cont'd)

Protected by AR



## Self-diagnostic Function (cont'd)

### Communication Connection Check Mode

1. Turn the ignition switch to the ACC (I) or ON (II).
2. Push and hold the "No. 1" and "No. 6" buttons. While holding the buttons, push the "PWR" knob to ON. Release the buttons.
3. Pressing the "No. 6" button, and the Communication connection check mode begins.

**With ELS audio system**

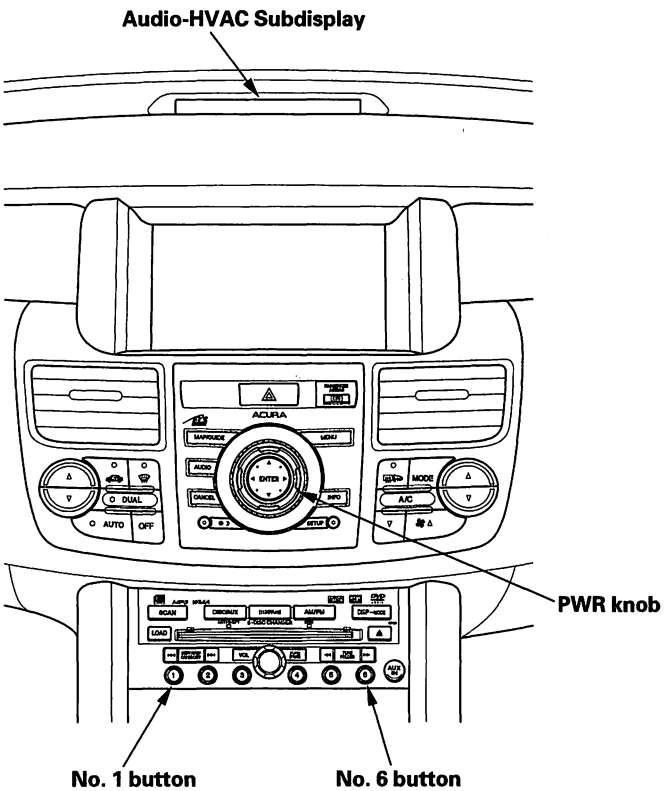


**With premium audio system**

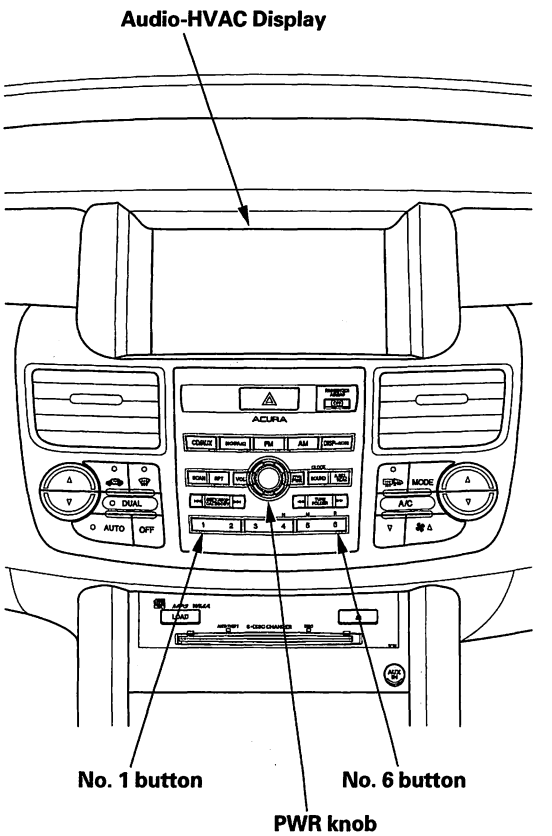




BACK

Protected by AR

4. Each time you press the "No. 6" key, the communication connection state is displays in the following order.

**Display Specifications**

| Displayed Segments | State | Remarks |
|---|---|---|
| DSP OK | The audio-HVAC subdisplay unit or the audio-HVAC display unit is connected. | |
| DSP NG | The audio-HVAC subdisplay unit or the audio-HVAC display unit is not connected. | |
| AC OK | The climate control unit is connected. | |
| AC NG | The climate control unit is not connected. | |
| AMP OK 00 | The stereo amplifier is connected. | Applicable to the ELS audio system |
| AMP OK 04 | The stereo amplifier is connected (Error has occurred four times in the past). | Applicable to the ELS audio system |
| AMP NG | The stereo amplifier is not connected. | Applicable to the ELS audio system |

NOTE: Any other diagnostic screens shown are for the manufactures purpose only.

5. The self-diagnostic function ends when you turn the audio unit, or the ignition switch off.

Protected by AR



## Error Codes

The audio system displays error codes when a problem is detected with the disc changer, the disc, the XM radio, or the anti-theft code.

| Error Code Displayed | Possible Cause | Solution |
|---|---|---|
| CHECK DISC LOAD | Cannot load disc. | Eject the disc and try another one. |
| MECH ERROR | There is a problem with the disc player. A common problem is disc labels coming off the disc while in the player. | Try to eject the disc and try another one. If there is still a problem, replace the audio unit. |
| FORMAT | A disc was inserted that has a format that is not recognized. | Eject the disc, and try another one. |
| HOT | Disc player is hot. This can happen if the vehicle is parked out in the hot sun all day. | Park the vehicle in a cooler place for a while and try the disc player again. If the error code is still present, try another disc. If the error code is still present, replace the audio unit. |
| XM LOADING | XM radio is acquiring audio or program information. | Wait until the radio receives the information. |
| XM NO SIGNAL | Lost signal. | Both terrestrial and satellite antennas have lost signal. Park the vehicle outside with a clear view of the southern horizon. |
| UPDATING | XM radio is receiving information update from the network. | This message will disappear once the update finishes. |
| XM ANTENNA | XM antenna error. | Repair the open or short in the terrestrial or satellite antenna. Substitute the XM antenna and recheck. If the error is gone, replace the original XM antenna. If the error is still present, replace the antenna lead. |
| ———— | No signal from XM. | Check a known-good vehicle with XM radio. If the known-good vehicle has the same symptoms, contact XM at (800) 852—9696. |
| CODE ERROR 1 | Anti-theft code mismatch (1st try). | Enter the correct anti-theft code. |
| CODE ERROR E | Anti-theft code mismatch (10th try). | Remove fuse No. 23 (10 A) in the under-hood fuse/relay box, then reinsert it. You will have 10 more tries to enter the correct anti-theft code. |



BACK

Protected by AR



## Poor AM or FM radio reception or interference

NOTE: Check the radio reception in an open area. Poor reception/interference can be caused by the following:
- The radio station is far away.
- A tall building, a mountain, or high-voltage power line is nearby.

1. Do the seek stop test (see page 23-98).

   *Is the test vehicle 10 % of the known-good vehicle?*

   **YES**—Multipath interference or weak station. Operation is normal.■

   **NO**—Go to step 2.

2. Check if the radio reception/interference is the same in several locations.

   *Is the reception/interference the same?*

   **YES**—Go to step 3.

   **NO**—Multipath interference or weak station. Operation is normal.■

3. Check the reception/interference while the engine is running.

   *Is there noise with the engine running?*

   **YES**—Check the antenna and radio grounds. If OK, check the charging system and the ignition system.■

   **NO**—Go to step 4.

4. Check the AM/FM antenna mast for cracks, or other damage. Verify that the AM/FM antenna mast is tight.

   NOTE: Do not use any tools to tighten the AM/FM antenna mast.

   *Is there any damage?*

   **YES**—Replace the AM/FM antenna mast (see page 23-110).■

   **NO**—Go to step 5.

5. Disconnect the AM/FM antenna connector A (3P).

6. With the radio turned ON, measure the voltage between AM/FM antenna connector A (3P) terminal No. 3 and body ground.

**AM/FM ANTENNA CONNECTOR A (3P)**

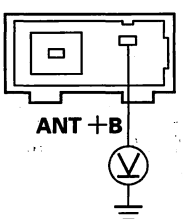


Terminal side of male terminals

*Is there battery voltage?*

**YES**—Go to step 11.

**NO**—Go to step 7.

(cont'd)

Protected by AR



## Symptom Troubleshooting (cont'd)

7. Remove the audio unit (see page 23-99).

8. Disconnect audio unit connector E (3P).

9. Check for continuity between audio unit connector E (3P) No. 3 terminal and the AM/FM antenna connector A (3P) terminal No. 3.

**AUDIO UNIT CONNECTOR E (3P)**
Terminal side of female terminals

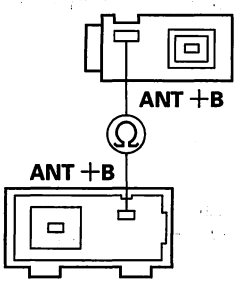


**AM/FM ANTENNA CONNECTOR A (3P)**
Terminal side of male terminals

*Is there continuity?*

**YES**—Go to step 10.

**NO**—Repair open in the wire between the audio unit and the AM/FM antenna. Also check the AM/FM antenna lead/sublead connector. ■

10. Check for continuity between the audio unit connector E (3P) terminal No. 3 and body ground.

**AUDIO UNIT CONNECTOR E (3P)**

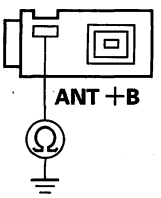


Terminal side of female terminals

*Is there continuity?*

**YES**—Repair short to body ground in the wire between the audio unit and AM/FM antenna. ■

**NO**—Replace the audio unit. ■



BACK

Protected by AR

11. Remove the audio unit (see page 23-99).

12. Disconnect audio unit connector E (3P).

13. Check for continuity between audio unit connector E (3P) No. 1 terminal and the AM/FM antenna connector A (3P) terminal No. 1.

**AUDIO UNIT CONNECTOR E (3P)**
Terminal side of female terminals

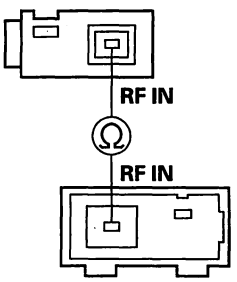


**AM/FM ANTENNA CONNECTOR A (3P)**
Terminal side of male terminals

*Is there continuity?*

**YES**—Go to step 14.

**NO**—Replace the AM/FM antenna lead and/or sublead. ■

14. Check for continuity between the audio unit connector E (3P) terminal No. 1 and body ground.

**AUDIO UNIT CONNECTOR E (3P)**

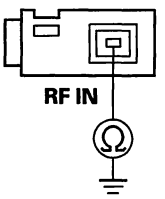


Terminal side of female terminals

*Is there continuity?*

**YES**—Replace the AM/FM antenna lead and/or sublead. ■

**NO**—Go to step 15.

15. Check for continuity between the audio unit connector E (3P) terminal No. 2 and the AM/FM antenna connector A (3P) terminal No. 2.

**AUDIO UNIT CONNECTOR E (3P)**
Terminal side of female terminals

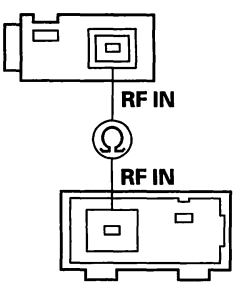


**AM/FM ANTENNA CONNECTOR A (3P)**
Terminal side of male terminals

*Is there continuity?*

**YES**—Go to step 16.

**NO**—Replace the AM/FM antenna lead and/or sublead. ■

(cont'd)

Protected by AR



## Symptom Troubleshooting (cont'd)

16. Check for continuity between the audio unit connector E (3P) terminal No. 1 and No. 2.

**AUDIO UNIT CONNECTOR E (3P)**

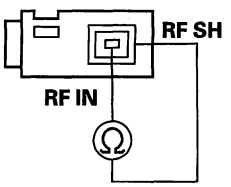


Terminal side of female terminals

*Is there continuity?*

**YES**—Replace the AM/FM antenna lead and/or sublead.■

**NO**—Replace the AM/FM antenna and recheck. If the reception is still poor, replace the audio unit.■

### Power switch will not turn ON (No information display and no sound)

NOTE: Always check the connectors for poor connections or loose terminals.

1. With the ignition switch ON (II), push the power switch ON to see if audio unit turns ON.

   *Does the audio unit display operate properly, and the audio unit sound normal?*

   **YES**—Intermittent failure, the system is OK at this time.■

   **NO**—Go to step 2.

2. Turn the ignition switch OFF.

3. Check the No. 23 (10 A) fuse in the under-hood fuse/relay box and the No. 35 (7.5 A) fuse in the under-dash fuse/relay box.

   *Are the fuses OK?*

   **YES**—Go to step 4.

   **NO**—Replace the fuse, and recheck.■

4. Remove the audio unit (see page 23-99). Check that the audio unit connectors are properly connected.

   *Is it connected properly?*

   **YES**—Go to step 5.

   **NO**—Repair poor connections and reconnect the connector, and recheck the function.■

5. Disconnect audio unit connector A (17P).

6. Turn the ignition switch ON (II).



BACK

Protected by AR

7. Measure the voltage between the No. 14 and No. 17 terminals of audio unit connector A (17P) and body ground.

**AUDIO UNIT CONNECTOR A (17P)**

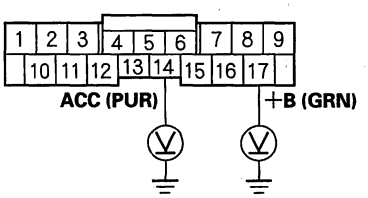


Wire side of female terminals

*Is there battery voltage?*

**YES**—Go to step 8.

**NO**—Repair open in the wire(s) between the No. 23 (10 A) fuse in the under-hood fuse/relay box, the No. 35 (7.5 A) fuse in the under-dash fuse/relay box and the audio unit.■

8. Reconnect audio unit connector A (17P).

9. Measure the voltage between audio unit connector A (17P) terminal No. 9 and body ground.

**AUDIO UNIT CONNECTOR A (17P)**

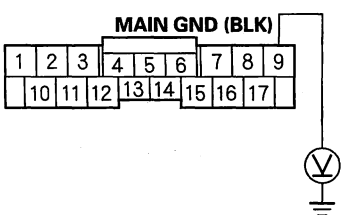


Wire side of female terminals

*Is there less than 0.1 V?*

**YES**—
- With ELS audio system: Replace the audio unit.■
- With premium audio system: Go to step 10.

**NO**—Repair open in the wire between the audio unit connector A (17P) terminal No. 9 and body ground (G504) (see page 22-60).■

10. Disconnect audio switch panel connector A (20P).

11. Turn the ignition switch ON (II).

12. Measure the voltage between the audio switch panel connector A (20P) terminal No. 11 and body ground.

**AUDIO SWITCH PANEL CONNECTOR A (20P)**

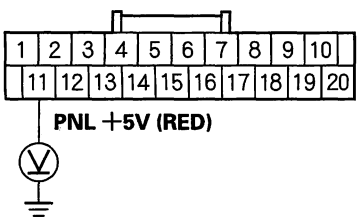


Wire side of female terminals

*Is there about 5 V?*

**YES**—Go to step 13.

**NO**—Repair open in the wire between the audio switch panel and body ground.■

(cont'd)

Protected by AR



## Symptom Troubleshooting (cont'd)

13. Measure the voltage between audio switch panel connector A (20P) terminal No. 1 and body ground.

**AUDIO SWITCH PANEL CONNECTOR A (20P)**

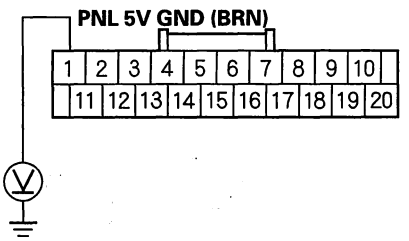


Wire side of female terminals

*Is there less then 0.5 V?*

**YES**—Substitute a known-good audio switch panel, then reconnect all connectors and recheck. If the symptom/indication goes away, replace the original audio switch panel. If symptom/indication is still present, replace the audio unit.■

**NO**—Repair open in the wire between audio switch panel connector A (20P) terminal No. 1 and audio unit connector C (28P) terminal No. 7 or check for a short to power. If there is no short to power, substitute a known-good audio unit and retest. If the symptom goes away, replace the original audio unit.■

### Power will not turn OFF

1. With the ignition switch ON (II), push the power switch OFF or turn the ignition switch OFF to see if the audio unit turns OFF.

   *Does the audio unit turn OFF?*

   **YES**—Operation is normal.■

   **NO**—Go to step 2.

2. Turn the ignition switch OFF.

3. Remove the audio unit (see page 23-99). Disconnect audio unit connector A (17P).

4. Measure the voltage between the No. 14 terminal of audio unit connector A (17P) and body ground.

**AUDIO UNIT CONNECTOR A (17P)**

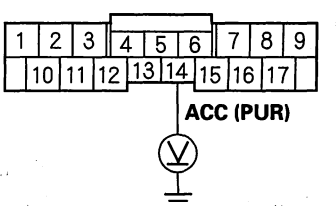


Wire side of female terminals

*Is there voltage?*

**YES**—Check for short to power on the PUR wire.■

**NO**—Replace the audio unit.■



BACK

Protected by AR

## No sound is heard from speaker(s) (display is normal) (with ELS audio system)

NOTE:
- Set the fader and balance positions to the center.
- Before doing the troubleshooting, do the power switch will not turn ON troubleshooting (see page 23-48).
- On vehicles equipped with the ELS audio system, verify the navigation and HandsFreeLink voice system are not activated. Press each system's back button to return the audio unit to the normal operating mode.

1. Check that the volume button is not set to the min level.

   *Is it at MIN level?*

   **YES**—Raise the volume level, and recheck the function.■
   **NO**—Go to step 2.

2. Do the speaker check mode with the self-diagnostic function (see page 23-38).

   *Is there a speaker(s) detected that has no sound?*

   **YES**—Go to step 3.
   **NO**—System is OK at this time. Check for poor connections at the audio unit, speakers and stereo amplifier.■

3. Turn the ignition switch OFF.

4. Check the faulty speaker(s) for damage.

   *Is there any damage?*

   **YES**—Replace the speaker and recheck.■
   **NO**—Go to step 5.

5. Remove the faulty speaker(s) (see page 23-102), and disconnect its connector.

6. Check the speaker connector for a loose or poor connection.

   *Reconnect the speaker connector, and recheck the symptom; is the condition still present?*

   **YES**—Go to step 7.
   **NO**—Intermittent failure. Operation is normal.■

7. Test the speaker(s) (see page 23-102).

   *Is the speaker OK?*

   **YES**—Go to step 8.

   **NO**—Replace the speaker(s).■

8. Disconnect stereo amplifier connectors A (18P) and speaker connector.

9. Check for continuity between body ground and stereo amplifier connector A (18P) according to the table. Then check for continuity between both pairs of speaker wires (+) and (—) at the stereo amplifier connrctor A (18P).

| Speaker | Stereo amplifier terminal | Wire color |
|---|---|---|
| Driver's door speaker, Left tweeter | A16 (+) | LT GRN |
| | A7 (—) | LT BLU |
| Front passenger's door speaker, Right tweeter | A15 (+) | GRY |
| | A6 (—) | BRN |
| Front center speaker | A11 (+) | PNK |
| | A2 (—) | PUR |
| Right rear door speaker | A12 (+) | BLU |
| | A3 (—) | ORN |
| Right rear satellite speaker | A14 (+) | YEL |
| | A5 (—) | WHT |
| Subwoofer | A10 (+) | GRN |
| | A1 (—) | RED |
| Left rear satellite speaker | A17 (+) | ORN |
| | A8 (—) | GRY |
| Left rear door speaker | A13 (+) | YEL |
| | A4 (—) | BRN |

*Is there continuity?*

**YES**—Repair short in the wire(s) between the stereo amplifier and the speaker(s) or short between the (+) and (—) speaker wires.■

**NO**—Go to step 10.

(cont'd)

Protected by AR



## Symptom Troubleshooting (cont'd)

10. Connect the speaker connector terminal (+) and (−) with a jumper wire.

11. Check for continuity between stereo amplifier connector A (18P) according to the table.

| Speaker | Stereo amplifier terminal | Wire color |
|---|---|---|
| Driver's door speaker, Left tweeter | A16 (+) | LT GRN |
| | A7 (−) | LT BLU |
| Passenger's door speaker, Right tweeter | A15 (+) | GRY |
| | A6 (−) | BRN |
| Front center speaker | A11 (+) | PNK |
| | A2 (−) | PUR |
| Right rear door speaker | A12 (+) | BLU |
| | A3 (−) | ORN |
| Right rear tweeter | A14 (+) | YEL |
| | A5 (−) | WHT |
| Subwoofer | A10 (+) | GRN |
| | A1 (−) | RED |
| Left rear tweeter | A17 (+) | ORN |
| | A8 (−) | GRY |
| Left rear door speaker | A13 (+) | YEL |
| | A4 (−) | BRN |

*Is there continuity?*

**YES**—Go to step 12.

**NO**—Repair open in the wire between the stereo amplifier and the speaker.■

12. Disconnect the jumper wire.

13. Measure the voltage between stereo amplifier connector A (18P) terminal No. 18 and body ground.

**STEREO AMPLIFIER CONNECTOR A (18P)**

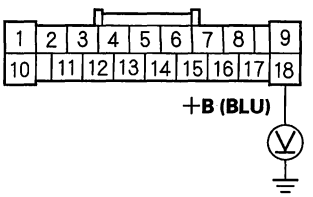


Wire side of female terminals

*Is there battery voltage?*

**YES**—Go to step 14.

**NO**—Repair open in the wire between No. 31 (20 A) fuse in the under-dash fuse/relay box and stereo amplifier connector A (18P) terminal No. 18.■

14. Disconnect the stereo amplifier connector B (28P).

15. Turn the ignition switch ON (II).

16. Measure the voltage between stereo amplifier connector B (28P) terminal No. 3 and body ground.

**STEREO AMPLIFIER CONNECTOR B (28P)**

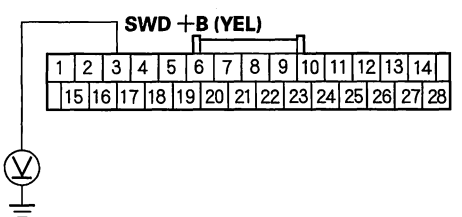


Wire side of female terminals

*Is there battery voltage?*

**YES**—Go to step 17.

**NO**—Repair open in the wire between the stereo amplifier connector B (28P) terminal No. 3 and audio unit connector D (32P) terminal No. 23.■

17. Turn the ignition switch OFF.



BACK

Protected by AR

18. Check for continuity between stereo amplifier connector A (18P) terminal No. 9, connector B (28P) terminal No. 2 and body ground.

**STEREO AMPLIFIER CONNECTOR A (18P)**

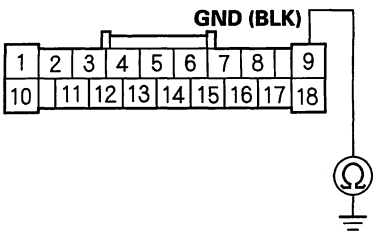


Wire side of female terminals

**STEREO AMPLIFIER CONNECTOR B (28P)**

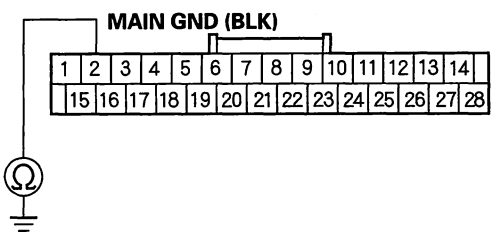


Wire side of female terminals

*Is there continuity?*

**YES**—Go to step 19.

**NO**—Repair open to the body ground in the wire between the stereo amplifier connector A (18P) terminal No. 9, connector B (28P) terminal No. 2 and body ground (G503, G504) (see page 22-60).■

19. Reconnect the stereo amplifier connector A (18P) and B (28P).

20. Do the communication connection check mode with the self-diagnostic function (see page 23-38).

*Is the stereo amplifier connection OK?*

**YES**—Go to step 25.

**NO**—Go to step 21.

21. Disconnect the stereo amplifier connector B (28P) and audio unit connector D (32P)

22. Check for continuity between stereo amplifier connector B (28P) and audio unit connector D (32P) as shown.

**STEREO AMPLIFIER CONNECTOR B (28P)**
Wire side of female terminals

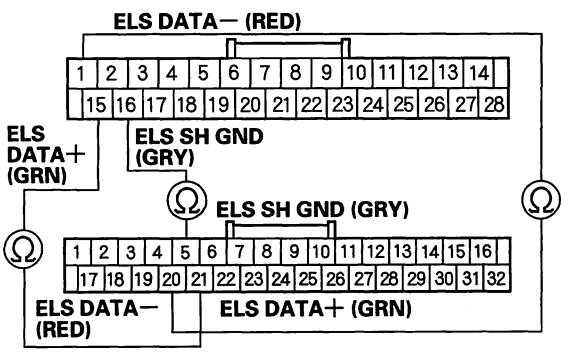


**AUDIO UNIT CONNECTOR D (32P)**
Wire side of female terminals

*Is there continuity?*

**YES**—Go to step 23.

**NO**—Repair open in the wire(s) between the stereo amplifier and audio unit.■

(cont'd)

Protected by AR



## Symptom Troubleshooting (cont'd)

23. Check for continuity between stereo amplifier connector B (28P) and body ground as shown.

**STEREO AMPLIFIER CONNECTOR B (28P)**

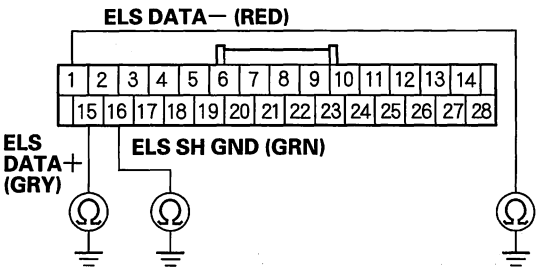


Wire side of female terminals

*Is there continuity?*

**YES**—Repair short to ground in the wire(s) between stereo amplifier and audio unit.■

**NO**—Go to step 24.

24. Check for continuity between the terminal of stereo amplifier connector B (28P) according to the table.

| From terminal | To terminals |
|---|---|
| B16 (GRY) | B15 (GRN), B1 (RED) |
| B15 (GRN) | B1 (RED) |

**STEREO AMPLIFIER CONNECTOR B (28P)**

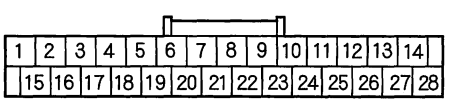


Wire side of female terminals

*Is there continuity between any of the terminals?*

**YES**—Repair short in the wire(s) between audio unit and stereo amplifier (replace the appropriate shield harness).■

**NO**—Replace the stereo amplifier.■

25. Disconnect the stereo amplifier connector B (28P) and audio connector D (32P).

26. Check the continuity between audio unit connector D (32P) and stereo amplifier connector B (28P) according to the table.

| Audio unit connector | Stereo amplifier connector | Wire color |
|---|---|---|
| D27 | B13 | YEL |
| D11 | B27 | PUR |
| D12 | B26 | GRY |
| D29 | B14 | ORN |
| D13 | B28 | BLU |
| D16 | B18 | BRN |
| D24 | B10 | WHT |
| D8 | B24 | BLK |
| D9 | B12 | GRY |
| D26 | B11 | RED |
| D10 | B25 | GRN |
| D32 | B4 | LT GRN |
| D30 | B6 | PNK |
| D14 | B19 | LT BLU |
| D15 | B5 | GRY |

**AUDIO UNIT CONNECTOR D (32P)**

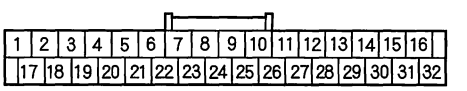


Wire side of female terminals

**STEREO AMPLIFIER CONNECTOR B (28P)**

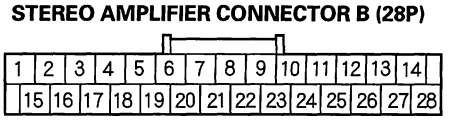


Wire side of female terminals

*Is there continuity?*

**YES**—Go to step 27.

**NO**—Repair open in the appropriate wire(s) between the audio unit and stereo amplifier.■



BACK

Protected by AR

27. Check the continuity between stereo amplifier connector B (28P) and body ground according to the table.

| Stereo amplifier connector | Wire color |
|---|---|
| B13 | YEL |
| B27 | PUR |
| B14 | ORN |
| B28 | BLU |
| B10 | WHT |
| B24 | BLK |
| B11 | RED |
| B25 | GRN |
| B4 | LT GRN |
| B18 | BRN |
| B6 | PNK |
| B19 | LT BLU |

**STEREO AMPLIFIER CONNECTOR B (28P)**

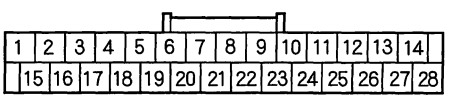


Wire side of female terminals

*Is there continuity?*

**YES**—Repair short to body ground in the wire(s) between the audio unit and stereo amplifier. ■

**NO**—Go to step 28.

28. Check for continuity between the terminals of stereo amplifier connector B (28P) according to the table.

| From terminal | To terminals |
|---|---|
| B26 (GRY) | B13 (YEL), B27 (PUR) B14 (ORN), B28 (BLU) |
| B13 (YEL) | B27 (PUR), B14 (ORN), B28 (BLU) |
| B27 (PUR) | B14 (ORN), B28 (BLU) |
| B14 (ORN) | B28 (BLU) |
| B12 (GRY) | B10 (WHT), B24 (BLK) B11 (RED), B25 (GRN) |
| B10 (WHT) | B24 (BLK), B11 (RED), B25 (GRN) |
| B24 (BLK) | B11 (RED), B25 (GRN) |
| B11 (RED) | B25 (GRN) |
| B5 (GRY) | B4 (LT GRN), B18 (BRN) B6 (PNK), B19 (LT BLU) |
| B4 (LT GRN) | B18 (BRN), B6 (PNK), B19 (LT BLU) |
| B18 (BRN) | B6 (PNK), B19 (LT BLU) |
| B6 (PNK) | B19 (LT BLU) |

**STEREO AMPLIFIER CONNECTOR B (28P)**

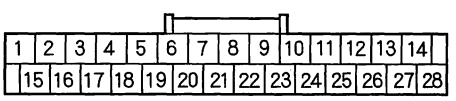


Wire side of female terminals

*Is there continuity between any of the terminals?*

**YES**—Repair short in the wire(s) between the audio unit and stereo amplifier (replace the appropriate shielded harness). ■

**NO**—Substitute a known-good audio unit and recheck. If the symptom/indication goes away, replace the original audio unit. If the symptom is still present, substitute a known-good stereo amplifier and recheck. If the symptom/indication goes away, replace the original stereo amplifier. ■

Protected by AR



## Symptom Troubleshooting (cont'd)

### No sound is heard from speakers (display is normal) (with premium audio system)

NOTE:
- Set the fader and balance positions to the center.
- Before performing symptom troubleshooting, do the power switch will not turn ON troubleshooting (see page 23-48).
- Always check the connectors for poor connections or loose terminals.

1. Check that the volume button is not set to the min level.

   *Is it at MIN level?*

   **YES**—Raise the volume level, and recheck the function.■

   **NO**—Go to step 2.

2. Do the speaker check mode with the self-diagnostic function (see page 23-38).

   *Is there a speaker(s) detected that has no sound?*

   **YES**—Go to step 3.

   **NO**—System is OK at this time. Check for poor connections at the audio unit, speakers and stereo amplifier.■

3. Turn the ignition switch OFF.

4. Check the faulty speaker(s) for damage.

   *Is there any damage?*

   **YES**—Replace the speaker and recheck.■

   **NO**—Go to step 5.

5. Remove the faulty speaker(s) (see page 23-102), and disconnect its connector.

6. Check the speaker connector for a loose or poor connection.

   *Reconnect the speaker connector, and recheck the symptom; is the condition still present?*

   **YES**—Go to step 7.

   **NO**—Intermittent failure. Operation is normal.■

7. Test the speaker(s) (see page 23-102).

   *Is the speaker OK?*

   **YES**—Go to step 8.

   **NO**—Replace the speaker(s).■

8. Disconnect stereo amplifier connector A (18P) and speaker connector.

9. Check the continuity between body ground and stereo amplifier connector A (18P) according to the table. Then check for continuity between both pairs of speaker wires (+) and (—) at the stereo amplifier connrctor A (18P).

| Speaker | Stereo amplifier terminal | Wire color |
|---|---|---|
| Driver's door speaker | A16 (+) | LT GRN |
| | A7 (—) | LT BLU |
| Front Passenger's door speaker | A15 (+) | GRY |
| | A6 (—) | BRN |
| Right rear door speaker | A12 (+) | BLU |
| | A3 (—) | ORN |
| Right front door tweeter | A14 (+) | RED |
| | A5 (—) | WHT |
| Subwoofer | A10 (+) | GRN |
| | A1 (—) | RED |
| Left front door tweeter | A17 (+) | RED |
| | A8 (—) | WHT |
| Left rear door speaker | A13 (+) | YEL |
| | A4 (—) | BRN |

   *Is there continuity?*

   **YES**—Repair short in the wire(s) between the stereo amplifier and the speaker(s) or short between the (+) and (—) speaker wires.■

   **NO**—Go to step 10.



BACK

Protected by AR

10. Connect the speaker connector terminal (+) and (−) with a jumper wire.

11. Check for continuity between stereo amplifier connector A (18P) according to the table.

| Speaker | Stereo amplifier terminal | Wire color |
|---|---|---|
| Driver's door speaker | A16 (+) | LT GRN |
| | A7 (−) | LT BLU |
| Front Passenger's door speaker | A15 (+) | GRY |
| | A6 (−) | BRN |
| Right rear door speaker | A12 (+) | BLU |
| | A3 (−) | ORN |
| Right front door tweeter | A14 (+) | RED |
| | A5 (−) | WHT |
| Subwoofer | A10 (+) | GRN |
| | A1 (−) | RED |
| Left front door tweeter | A17 (+) | RED |
| | A8 (−) | WHT |
| Left rear door speaker | A13 (+) | YEL |
| | A4 (−) | BRN |

*Is there continuity?*

**YES**—Go to step 12.

**NO**—Repair open in the wire between the stereo amplifier and the speaker.■

12. Disconnect the jumper wire.

13. Measure the voltage between stereo amplifier connector A (18P) terminal No. 18 and body ground.

**STEREO AMPLIFIER CONNECTOR A (18P)**

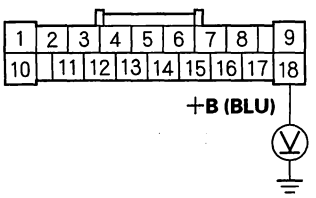


Wire side of female terminals

*Is there battery voltage?*

**YES**—Go to step 14.

**NO**—Repair open in the wire between No. 31 (20 A) fuse in the under-dash fuse/relay box and stereo amplifier connector A (18P) terminal No. 18.■

14. Disconnect the stereo amplifier connectors B (24P).

15. Turn the ignition switch ON (II).

16. Measure the voltage between stereo amplifier connector B (24P) terminal No. 24 and body ground.

**STEREO AMPLIFIER CONNECTOR B (24P)**

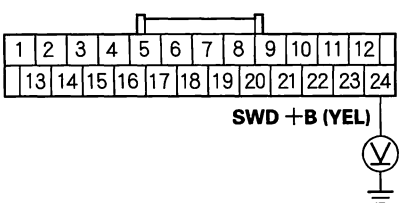


Wire side of female terminals

*Is there battery voltage?*

**YES**—Go to step 17.

**NO**—Repair open in the wire between the stereo amplifier connector B (24P) terminal No. 24 and audio unit connector D (32P) terminal No. 23.■

17. Turn the ignition switch OFF.

(cont'd)

Protected by AR



## Symptom Troubleshooting (cont'd)

18. Check for continuity between stereo amplifier connector A (18P) terminal No. 9, connector B (24P) terminal No. 1 and body ground.

**STEREO AMPLIFIER CONNECTOR A (18P)**

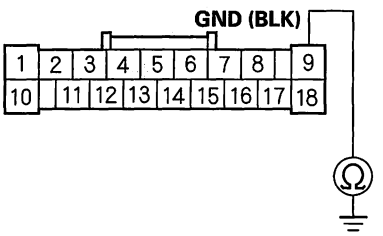


Wire side of female terminals

**STEREO AMPLIFIER CONNECTOR B (24P)**

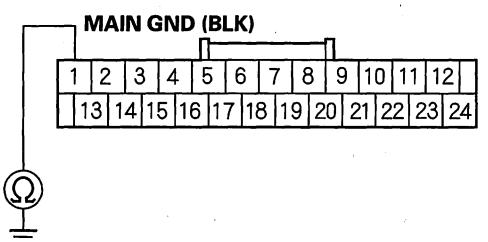


Wire side of female terminals

*Is there continuity?*

**YES**—Go to step 19.

**NO**—Repair open to the body ground in the wire(s) between the stereo amplifier connector A (18P) terminal No. 9, connector B (24P) terminal No. 1 and body ground (G503, G504) (see page 22-60). ■

19. Disconnect the audio unit connector D (32P).

20. Check for continuity between audio unit connectors D (32P) and stereo amplifier connector B (24P) according to the table.

| Audio unit connector | Stereo amplifier connector | Wire color |
|---|---|---|
| D27 | B16 | LT BLU |
| D11 | B4 | PUR |
| D12 | B15 | GRY |
| D29 | B19 | BRN |
| D13 | B7 | YEL |
| D28 | B18 | GRY |
| D24 | B14 | BLU |
| D8 | B2 | PNK |
| D9 | B3 | GRY |
| D26 | B17 | GRN |
| D10 | B5 | RED |
| D25 | B6 | GRY |
| D30 | B20 | BLU |
| D14 | B8 | PNK |
| D15 | B9 | GRY |

**AUDIO UNIT CONNECTOR D (32P)**

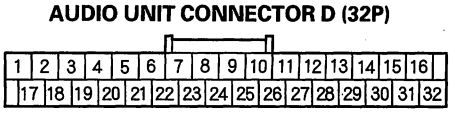


Wire side of female terminals

**STEREO AMPLIFIER CONNECTOR B (24P)**

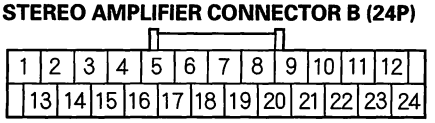


Wire side of female terminals

*Is there continuity?*

**YES**—Go to step 21.

**NO**—Repair open in the wire(s) between the audio unit and stereo amplifier. ■



BACK

Protected by AR

21. Check for continuity between stereo amplifier connector B (24P) and body ground according to the table.

| Stereo amplifier connector | Wire color |
|---|---|
| B4 | PUR |
| B16 | LT BLU |
| B7 | YEL |
| B19 | BRN |
| B2 | PNK |
| B14 | BLU |
| B5 | RED |
| B17 | GRN |
| B8 | PNK |
| B20 | BLU |

**STEREO AMPLIFIER CONNECTOR B (24P)**

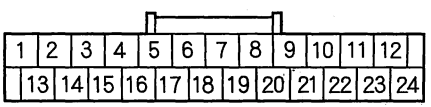


Wire side of female terminals

*Is there continuity?*

**YES**—Repair short to body ground in the wire(s) between the audio unit and stereo amplifier.■

**NO**—Go to step 22.

22. Check for continuity between the terminals of stereo amplifier connector B (24P) according to the table.

| From terminal | To terminals |
|---|---|
| B15 (GRY) | B4 (PUR), B16 (LT BLU) |
| B4 (PUR) | B16 (LT BLU) |
| B18 (GRY) | B7 (YEL), B19 (BRN) |
| B7 (YEL) | B19 (BRN) |
| B3 (GRY) | B2 (PNK), B14 (BLU) |
| B2 (PNK) | B14 (BLU) |
| B6 (GRY) | B5 (RED), B17 (GRN) |
| B5 (RED) | B17 (GRN) |
| B9 (GRY) | B8 (PNK), B20 (BLU) |
| B8 (PNK) | B20 (BLU) |

**AUDIO UNIT CONNECTOR D (32P)**

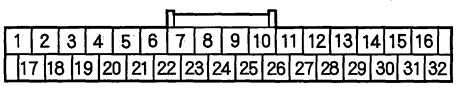


Wire side of female terminals

**STEREO AMPLIFIER CONNECTOR B (24P)**

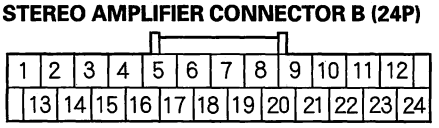


Wire side of female terminals

*Is there continuity between any of the terminals?*

**YES**—Repair short in the wire(s) between the audio unit and stereo amplifier (replace the appropriate shielded harness).■

**NO**—Substitute a known-good audio unit and recheck. If the symptom/indication goes away, replace the original audio unit. If the symptom is still present, substitute a known-good stereo amplifier and recheck. If the symptom/indication goes away, replace the original stereo amplifier.■

Protected by AR



## Symptom Troubleshooting (cont'd)

### Poor or no sound with XM radio (audio unit can display XM channels)

NOTE:
- Check the XM radio reception in an open area. Poor reception/interference can be caused by nearby tall buildings, mountains, or high-voltage power lines.
- Always check the connector for poor connections or loose terminals.

1. Turn the ignition switch to ACC (I).
2. Turn on the audio unit and select XM radio.
3. Check for an error message on the display.

   *Are there any messages displayed?*

   **YES**—Go to the error code list (see page 23-44). ■

   **NO**—
   - With AcuraLink: Go to step 4.
   - Without AcuraLink: Go to step 8.

4. Disconnect audio unit connector B (14P) and AcuraLink control unit (XM receiver) connector A (20P).
5. Check for continuity between audio unit connector B (14P) and AcuraLink control unit (XM receiver) connector A (20P) according to the table.

| Audio unit connector | AcuraLink control unit (XM receiver) connector | Wire color |
|---|---|---|
| B13 | A20 | WHT |
| B5 | A10 | RED |
| B14 | A19 | GRN |
| B6 | A9 | BLK |
| B4 | A8 | GRY |

**AUDIO UNIT CONNECTOR B (14P)**

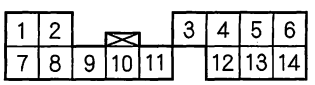


Wire side of female terminals

**ACURALINK CONTROL UNIT (XM RECEIVER) CONNECTOR A (20P)**

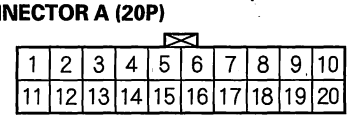


Wire side of female terminals

*Is there continuity?*

**YES**—Go to step 6.

**NO**—Repair open in the wire(s) between the audio unit and AcuraLink control unit (XM receiver). ■



BACK

Protected by AR

6. Check for continuity between AcuraLink control unit (XM receiver) connector A (20P) and body ground according to the table.

| AcuraLink control unit (XM receiver) connector | Wire color |
|---|---|
| A20 | WHT |
| A10 | RED |
| A19 | GRN |
| A9 | BLK |

**ACURALINK CONTROL UNIT (XM RECEIVER) CONNECTOR A (20P)**

| | | | | | | | | | |
|---|---|---|---|---|---|---|---|---|---|
| 1 | 2 | 3 | 4 | 5 | 6 | 7 | 8 | 9 | 10 |
| 11 | 12 | 13 | 14 | 15 | 16 | 17 | 18 | 19 | 20 |

Wire side of female terminals

*Is there continuity?*

**YES**—Repair short to body ground in the wire(s) between the audio unit and AcuraLink control unit (XM receiver).■

**NO**—Go to step 7.

7. Check for continuity between the terminals of AcuraLink control unit (XM receiver) connector A (20P) according to the table.

| From terminal | To terminals |
|---|---|
| A8 (GRY) | A20 (WHT), A10 (RED), A19 (GRN), A9 (BLK) |
| A20 (WHT) | A10 (RED), A19 (GRN), A9 (BLK) |
| A10 (RED) | A19 (GRN), A9 (BLK) |
| A19 (GRN) | A9 (BLK) |

**ACURALINK CONTROL UNIT (XM RECEIVER) CONNECTOR A (20P)**

| | | | | | | | | | |
|---|---|---|---|---|---|---|---|---|---|
| 1 | 2 | 3 | 4 | 5 | 6 | 7 | 8 | 9 | 10 |
| 11 | 12 | 13 | 14 | 15 | 16 | 17 | 18 | 19 | 20 |

Wire side of female terminals

*Is there continuity between any of the terminals?*

**YES**—Repair short in the wire(s) between the audio unit and AcuraLink control unit (XM receiver) (replace the appropriate shielded harness).■

**NO**—Substitute a known-good audio unit and recheck. If the symptom/indication goes away, replace the original audio unit. If the symptom is still present, substitute a known-good AcuraLink control unit (XM receiver) and recheck. If the symptom/indication goes away, replace the original AcuraLink control unit (XM receiver).■

(cont'd)

Protected by AR



## Symptom Troubleshooting (cont'd)

8. Check for continuity between audio unit connector B (14P) and XM receiver connector A (14P) according to the table.

| Audio unit connector | XM receiver connector | Wire color |
|---|---|---|
| B13 | A13 | WHT |
| B5 | A5 | RED |
| B14 | A14 | GRN |
| B6 | A6 | BLK |
| B4 | A4 | GRY |

**AUDIO UNIT CONNECTOR B (14P)**

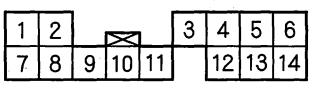


Wire side of female terminals

**XM RECEIVER CONNECTOR A (14P)**

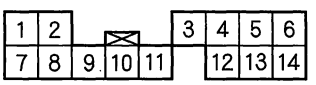


Wire side of female terminals

*Is there continuity?*

**YES**—Go to step 9.

**NO**—Repair open in the wire(s) between the audio unit and XM receiver.■

9. Check for continuity between XM receiver connector A (14P) and body ground according to the table.

| XM receiver connector | Wire color |
|---|---|
| A13 | WHT |
| A5 | RED |
| A14 | GRN |
| A6 | BLK |

**XM RECEIVER CONNECTOR A (14P)**

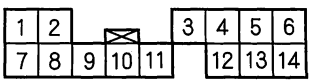


Wire side of female terminals

*Is there continuity?*

**YES**—Repair short to body ground in the wire(s) between the audio unit and XM receiver.■

**NO**—Go to step 10.



BACK

Protected by AR

10. Check for continuity between the terminals of XM receiver connector A (14P) according to the table.

| From terminal | To terminals |
|---|---|
| A4 (GRY) | A13 (WHT), A5 (RED), A14 (GRN), A6 (BLK) |
| A13 (WHT) | A5 (RED), A14 (GRN), A6 (BLK) |
| A5 (RED) | A14 (GRN), A6 (BLK) |
| A14 (GRN) | A6 (BLK) |

**XM RECEIVER CONNECTOR A (14P)**

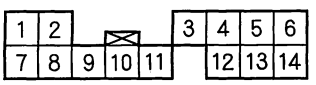


Wire side of female terminals

*Is there continuity between any of the terminals?*

**YES**—Repair short in the wire(s) between the audio unit and XM receiver (replace the appropriate shielded harness).■

**NO**—Substitute a known-good audio unit and recheck. If the symptom/indication goes away, replace the original audio unit. If the symptom is still present, substitute a known-good XM receiver and recheck. If the symptom/indication goes away, replace the original XM receiver.■

## XM radio display is blank and no station information is displayed (With AcuraLink)

NOTE: Always check the connectors for poor connections or loose terminals.

1. Turn the ignition switch to LOCK (0).
2. Disconnect AcuraLink control unit (XM receiver) connector A (20P).
3. Measure the voltage between AcuraLink Control unit (XM receiver) connector A (20P) terminal No. 1 and body ground.

**ACURALINK CONTROL UNIT (XM RECEIVER) CONNECTOR A (20P)**

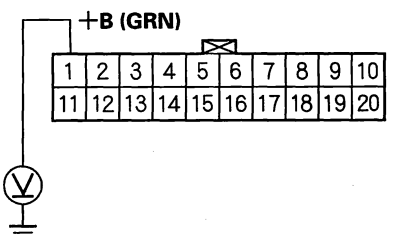


Wire side of female terminals

*Is there battery voltage?*

**YES**—Go to step 4.

**NO**—Repair open in the wire between No. 23 (10 A) fuse in the under-hood fuse/relay box and AcuraLink control unit (XM receiver) connector A (20P) terminal No. 1.■

(cont'd)

Protected by AR



## Symptom Troubleshooting (cont'd)

4. Turn the ignition switch ON (II).

5. Measure the voltage between AcuraLink control unit (XM receiver) connector A (20P) terminal No. 2 and body ground.

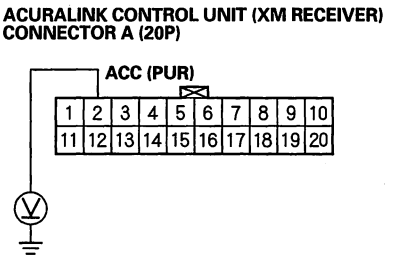


*Is there battery voltage?*

**YES**—Go to step 6.

**NO**—Repair open in the wire between No. 35 (7.5 A) fuse in the under-dash fuse/relay box and AcuraLink control unit (XM receiver) connector A (20P) terminal No. 2.■

6. Measure the voltage between AcuraLink control unit (XM receiver) connector A (20P) terminal No. 12 and body ground.

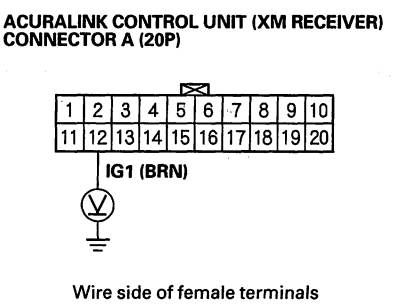


*Is there battery voltage?*

**YES**—Go to step 7.

**NO**—Repair open in the wire between No. 10 (7.5 A) fuse in the under-dash fuse/relay box and AcuraLink control unit (XM receiver) connector A (20P) terminal No. 12.■

7. Reconnect the AcuraLink control unit (XM receiver) connector A (20P).

8. Measure the voltage between AcuraLink control unit (XM receiver) connector A (20P) terminal No. 11 and body ground.

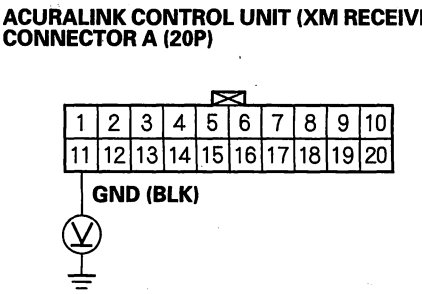


*Is there less than 0.5 V?*

**YES**—Go to step 9.

**NO**—Repair open in the wire between AcuraLink control unit (XM receiver) connector A (20P), terminal No. 11 and body ground (G505).■

9. Disconnect audio unit connector B (14P), AcuraLink control unit (XM receiver) connector A (20P), and navigation display unit 20P connector.



BACK

Protected by AR

10. Check for continuity between audio unit connector B (14P) and AcuraLink control unit (XM receiver) connector A (20P) as shown.

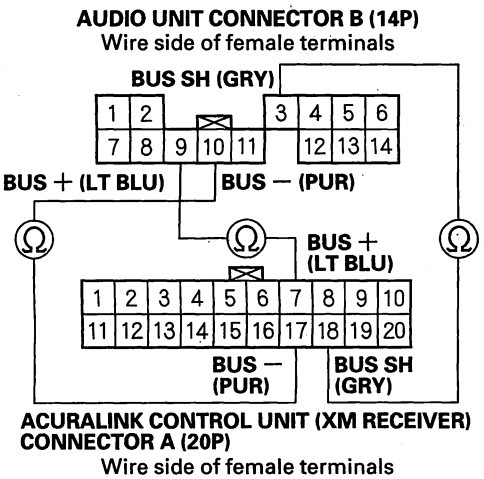


*Is there continuity?*

**YES**—Go to step 11.

**NO**—Repair open in the wire(s) between the audio unit and AcuraLink control unit (XM receiver).■

11. Check for continuity between AcuraLink control unit (XM receiver) connector A (20P) and body ground as shown.

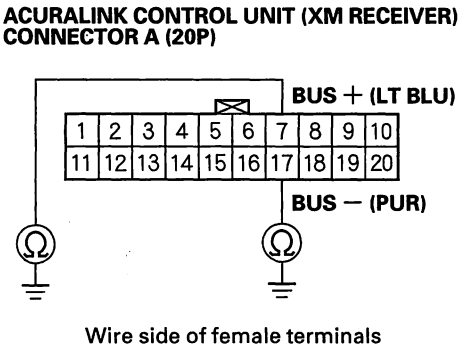


*Is there continuity?*

**YES**—Repair short to body ground in the wire(s) between the audio unit and AcuraLink control unit (XM receiver).■

**NO**—Go to step 12.

(cont'd)

Protected by AR



## Symptom Troubleshooting (cont'd)

12. Check for continuity between the terminals of AcuraLink control unit (XM receiver) connector A (20P) according to the table.

| From terminal | To terminals |
|---|---|
| A18 (GRY) | A7 (LT BLU), A17 (PUR) |
| A7 (LT BLU) | A17 (PUR) |

**ACURALINK CONTROL UNIT (XM RECEIVER) CONNECTOR A (20P)**

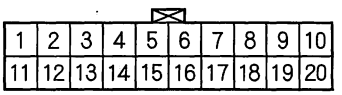


Wire side of female terminals

*Is there continuity between any of the terminals?*

**YES**—Repair short in the wire(s) between the audio unit and AcuraLink control unit (XM receiver) (replace the appropriate shielded harness).■

**NO**—Substitute a known-good audio unit and recheck. If the symptom/indication goes away, replace the original audio unit. If the symptom is still present, substitute a known-good AcuraLink control unit (XM receiver) and recheck. If the symptom/indication goes away, replace the original AcuraLink control unit (XM receiver).■

### XM radio display is blank and no station information is displayed (Without AcuraLink)

NOTE: If you can only tune to channels 000, 001, 174, and 247, make sure the audio unit is set to the channel mode (see owner's manual), if it is set to channel mode, call XM satellite radio customer support and check the account activation status.

1. Turn the ignition switch to ACC (I).
2. Measure the voltage between XM receiver connector A (14P) terminal No. 1 and body ground.

**XM RECEIVER CONNECTOR A (14P)**

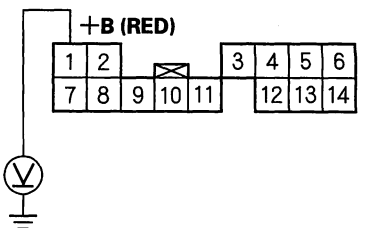


Wire side of female terminals

*Is there battery voltage?*

**YES**—Go to step 3.

**NO**—Repair open in the wire between the XM receiver connector A (14P) terminal No. 1 and audio unit connector B (14P) terminal No. 1.■



BACK

Protected by AR

3. Measure the voltage between XM receiver connector A (14P) terminal No. 11 and body ground.

**XM RECEIVER CONNECTOR A (14P)**

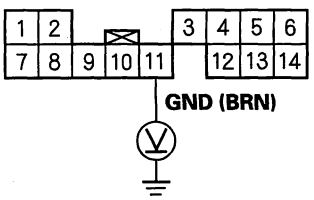


Wire side of female terminals

*Is there less than 0.5 V?*

**YES**—Go to step 4.

**NO**—Repair open in the wire between the XM receiver connector A (14P) terminal No. 11 and audio unit connector B (14P) terminal No. 11.■

4. Turn the ignition switch to LOCK (0).

5. Measure the voltage between audio unit connector B (14P) terminal No. 2 and body ground.

**AUDIO UNIT CONNECTOR B (14P)**

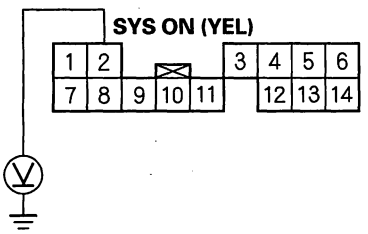


Wire side of female terminals

*Is there 10 V or more present?*

**YES**—Go to step 6.

**NO**—Substitute a known-good XM receiver and recheck. If 10 V or more are present, replace the original XM receiver (see page 23-108).■

(cont'd)

Protected by AR



## Symptom Troubleshooting (cont'd)

6. Turn the ignition switch ON (II).

7. Measure the voltage between the audio unit connector B (14P) terminal No. 2 and body ground.

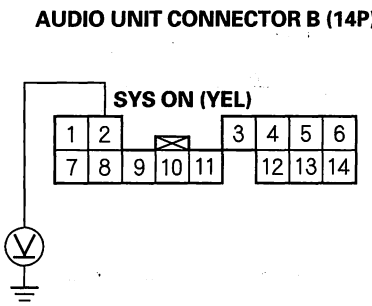


*Is there less than 0.5V?*

**YES**—Go to step 8.

**NO**—Substitute a known-good audio unit and recheck. If 0.5 V or less are present, replace the original audio unit.■

8. Turn the ignition switch to LOCK (0).

9. Disconnect audio unit connector B (14P) and XM receiver connector A (14P).

10. Check for continuity between audio unit connector B (14P) and XM receiver connector A (14P) as shown.

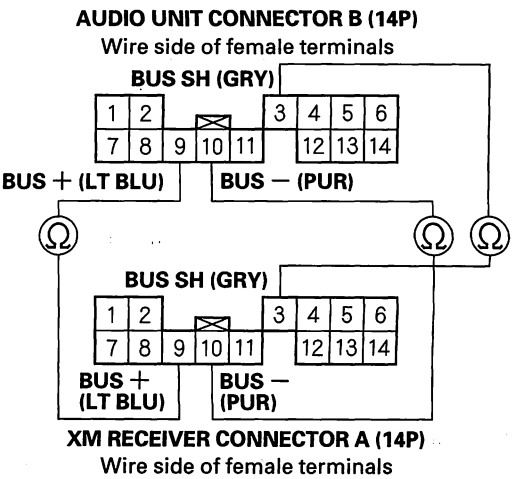


*Is there continuity?*

**YES**—Go to step 11.

**NO**—Repair open in the wire(s) between the audio unit and XM receiver.■



BACK

Protected by AR

11. Check for continuity between XM receiver connector A (14P) and body ground as shown.

**XM RECEIVER CONNECTOR A (14P)**

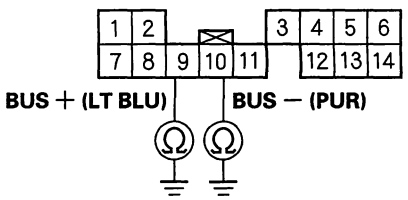


Wire side of female terminals

*Is there continuity?*

**YES**—Repair short to body ground in the wire(s) between the audio unit and XM receiver. ■

**NO**—Go to step 12.

12. Check for continuity between the terminals of XM receiver connector A (14P) according to the table.

| From terminal | To terminals |
|---|---|
| A3 (GRY) | A9 (LT BLU), A10 (PUR) |
| A9 (LT BLU) | A10 (PUR) |

**XM RECEIVER CONNECTOR A (14P)**

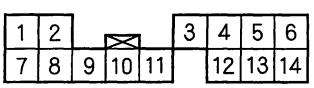


Wire side of female terminals

*Is there continuity between any of the terminals?*

**YES**—Repair short in the wire(s) between the audio unit and XM receiver (replace the appropriate shielded harness). ■

**NO**—Substitute a known-good audio unit and recheck. If the symptom/indication goes away, replace the original audio unit. If the symptom is still present, substitute a known-good XM receiver and recheck. If the symptom/indication goes away, replace the original XM receiver. ■

## Audio system sound is weak or distorted (display is normal)

1. Check for sound in each mode (AM, FM, XM, and disc).

*Is there sound from the speakers, and is the sound quality normal in each mode?*

**YES**—Intermittent failure. The system is OK at this time. Check for loose connections at the audio unit, the amplifier, and each speaker. ■

**NO**—Speakers all work, sound quality is poor. ■

- If sound is poor only with XM radio, or the XM radio does not function, go to poor or no sound with XM radio (see page 23-60).
- If the sound is poor only with AM or FM, go to poor AM or FM radio reception or interference (see page 23-45).
- If the sound is poor in all modes, go to sound quality diagnosis (see page 23-93).

Protected by AR



## Symptom Troubleshooting (cont'd)

### Audio unit button illumination does not work (With ELS audio system)

NOTE: Always check the connectors for poor connections or loose terminals.

1. Turn the ignition switch to ON (II).

2. Turn the combination lighting switch to the parking light position.

3. Check the illumination of the audio unit buttons.

   *Are the buttons illuminated?*

   **YES**—Intermittent problem: The audio unit is OK at this time. Check for loose or poor connections at audio unit connector A (17P).■

   **NO**—Go to step 4.

4. Check the illumination of several other buttons not related to the audio system.

   *Are the buttons illuminated?*

   **YES**—Go to step 5.

   **NO**—Troubleshoot the interior lights. Start by checking the No. 14 (7.5 A) fuse in the under-dash fuse/relay box. If the fuse is OK, check for an open in the wire between the under-dash fuse/relay box and the audio unit.■

5. Turn the ignition switch to LOCK (0).

6. Disconnect audio unit connector A (17P).

7. Disconnect gauge control module 36P connector.

8. Check for continuity between audio unit connector A (17P) terminal No. 1 and gauge control module 36P connector terminal No. 16.

**AUDIO UNIT CONNECTOR A (17P)**
Wire side of female terminals

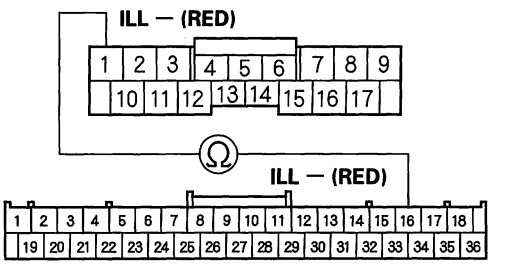


**GAUGE CONTROL MODULE CONNECTOR (36P)**
Wire side of female terminals

*Is there continuity?*

**YES**—Go to step 9.

**NO**—Repair open in the wire between the gauge control module and the audio unit.■

9. Turn the ignition switch to ON (II).

10. With the headlight switch still on, measure the voltage between audio unit connector A (17P) terminal No. 10 and body ground.

**AUDIO UNIT CONNECTOR A (17P)**

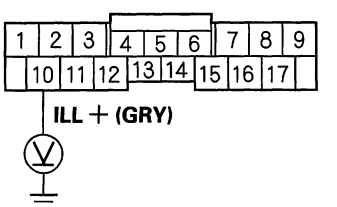


Wire side of female terminals

*Is there battery voltage?*

**YES**—Check the connections at the audio unit connector A (17P). If all connections are OK, replace the audio unit.■

**NO**—Repair open in the wire between the under-dash fuse/relay box and the audio unit.■



BACK

Protected by AR

## Audio switch panel button illumination does not work (With premium audio system)

NOTE: Always check the connectors for poor connections or loose terminals.

1. Turn the ignition switch to ON (II).

2. Turn the combination lighting switch to the parking light position.

3. Check the illumination of the audio switch panel buttons.

   *Are the buttons illuminated?*

   **YES**—Intermittent problem: The audio switch panel is OK at this time. Check for loose or poor connections at audio switch panel connector A (20P). ■

   **NO**—Go to step 4.

4. Check the illumination of several other buttons not related to the audio system.

   *Are the buttons illuminated?*

   **YES**—Go to step 5.

   **NO**—Troubleshoot the interior lights. Start by checking the No. 14 (7.5 A) fuse in the under-dash fuse/relay box. If the fuse is OK, check for an open in the wire between the under-dash fuse/relay box and the audio switch panel. ■

5. Turn the ignition switch to LOCK (0).

6. Remove the audio switch panel, then check the bulbs (see page 23-109).

   *Are the bulbs OK?*

   **YES**—Go to step 7.

   **NO**—Replace the failed audio switch panel blubs. ■

7. Disconnect audio switch panel connector A (20P) and gauge control module 36P connector (see page 22-284).

8. Check for continuity between audio switch panel connector A (20P) terminal No. 18 and gauge control module 36P connector terminal No. 16.

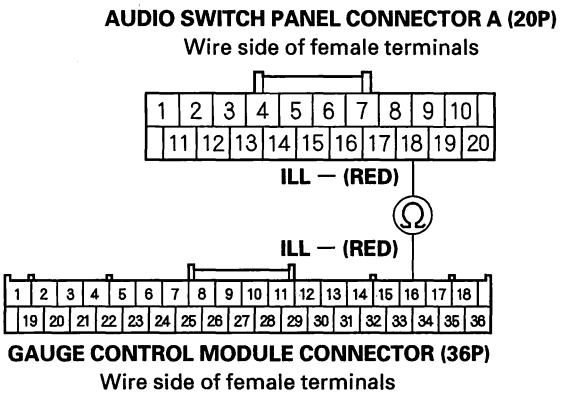


   *Is there continuity?*

   **YES**—Go to step 9.

   **NO**—Repair open in the wire between the gauge control module and the audio switch panel. ■

9. Turn the ignition switch ON (II).

10. With the headlight switch still on, measure the voltage between audio switch panel connector A (20P) terminal No. 20 and body ground.

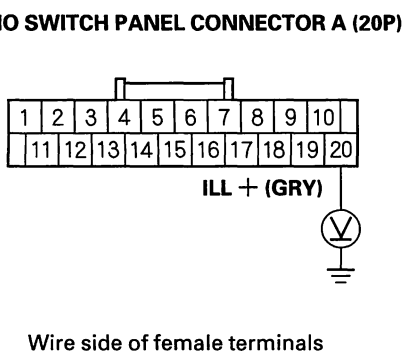


   *Is there battery voltage?*

   **YES**—Check the connections at the audio switch panel connector A (20P). If all connections are OK, replace the audio switch panel. ■

   **NO**—Repair open in the wire between the under-dash fuse/relay box and the audio switch panel. ■

BACK

Protected by AR



## Symptom Troubleshooting (cont'd)

### Radio preset memory is lost

NOTE: If only XM stations are lost, go to XM radio preset memory is lost (see page 23-72).

1. Set each of the radio station preset buttons.

   *Do each of the buttons set properly?*

   **YES**—Go to step 2.

   **NO**—Replace the audio unit.■

2. Turn the ignition switch OFF for 1 minute, then turn it back to ON (II).

3. Test the preset buttons for proper recall operation.

   *Do the preset buttons recall the set radio stations?*

   **YES**—System is normal at this time. Check connections at the audio unit.■

   **NO**—Replace the audio unit.■

### XM radio preset memory is lost

NOTE: Always check the connectors for poor connections or loose terminals.

1. Set each of the XM radio channel preset buttons.

   *Does each of the XM radio channel preset buttons set properly?*

   **YES**—Go to step 2.
   **NO**—Go to step 6.

2. Turn the ignition switch off for 1 minute, then turn it back to ON (II).

3. Test all of the XM radio channel preset buttons for proper recall operation.

   *Do the preset buttons recall the XM radio stations?*

   **YES**—System is normal at this time. Check connections at the audio unit.■
   **NO**—
   - With AcuraLink: Go to step 4.
   - Without AcuraLink: Go to step 11.

4. Turn the ignition switch to LOCK (0).

5. Disconnect AcuraLink control unit (XM receiver) connector A (20P).

6. Measure the voltage between AcuraLink control unit (XM receiver) connector A (20P) terminal No. 1 and body ground.

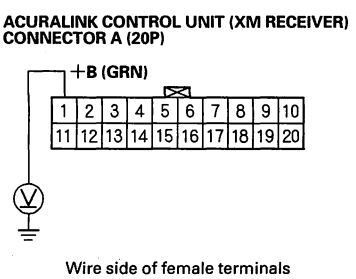


   *Is there battery voltage?*

   **YES**—Go to step 7.
   **NO**—Repair open in the wire between the under-hood fuse/relay box and AcuraLink control unit (XM receiver) connector A (20P) terminal No. 1.■



BACK

Protected by AR

7. Turn the ignition switch ON (II).

8. Measure the voltage between AcuraLink control unit (XM receiver) connector A (20P) terminals No. 2, and No. 12 and body ground individually.

ACURALINK CONTROL UNIT (XM RECEIVER) CONNECTOR A (20P)

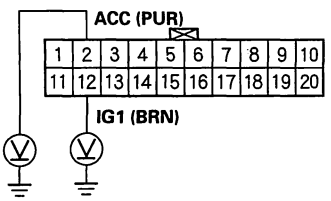


Wire side of female terminals

*Is there battery voltage?*

**YES**—Go to step 9.
**NO**—Repair open in the wire(s) between the under-hood fuse/relay box and AcuraLink control unit (XM receiver) connector A (20P) terminals No. 2 and/or No. 12.■

9. Reconnect AcuraLink control unit (XM receiver) connector A (20P).

10. Measure the voltage between AcuraLink control unit (XM receiver) connector A (20P) terminal No. 11 and body ground.

ACURALINK CONTROL UNIT (XM RECEIVER) CONNECTOR A (20P)

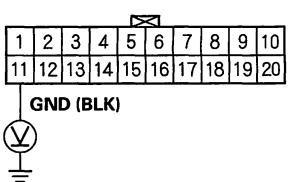


Wire side of female terminals

*Is there less than 0.5 V?*

**YES**—Replace the AcuraLink control unit (XM receiver).■
**NO**—Repair open in the wire between AcuraLink control unit (XM receiver) connector A (20P) terminal No. 11 and body ground (G505) (see page 22-60).■

11. Turn the ignition switch to LOCK (0).

12. Disconnect the XM receiver connector A (14P).

13. Measure the voltage between XM receiver connector A (14P) terminal No. 1 and body ground.

XM RECEIVER CONNECTOR A (14P)

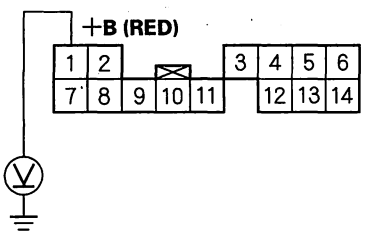


Wire side of female terminals

*Is there battery voltage?*

**YES**—Go to step 14.

**NO**—Repair open in the wire between audio unit connector B (14P) terminal No. 1 and XM receiver connector A (14P) terminal No. 1.■

(cont'd)

Protected by AR



## Symptom Troubleshooting (cont'd)

14. Reconnect XM receiver connector A (14P).

15. Measure the voltage between XM receiver connector A (14P) terminal No. 11 and body ground.

**XM RECEIVER CONNECTOR A (14P)**

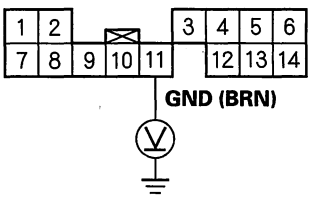


Wire side of female terminals

*Is there less than 0.5 V?*

**YES**—Replace the XM receiver.■

**NO**—Repair open in the wire between audio unit connector B (14P) terminal No. 11 and XM receiver connector A (14P) terminal No. 11.■

### Audio disc does not eject

NOTE: Disc labels should not be used in the audio unit. They may damage the player mechanism.

1. Turn on the audio system.

   *Does the system turn on?*

   **YES**—Go to step 2.

   **NO**—Go to power switch will not turn ON (see page 23-48).

2. Check to see if the disc ejects correctly with no binding when you push the EJECT button.

   *Does it eject properly?*

   **YES**—Operation is normal.■

   **NO**—Replace the audio unit.■



BACK

Protected by AR

## Audio disc changer does not load all six discs

NOTE: Disc labels should not be used in the audio unit. They may damage the player mechanism.

1. Try loading six discs into the audio unit.

   *Does the audio unit accept all six disks?*

   **YES**—Intermittent failure, the audio unit is OK at this time.■

   **NO**—Go to step 2.

2. Try loading the disc player with six known-good discs.

   *Does the audio unit accept all six disks?*

   **YES**—At least one of the original discs is faulty.■

   **NO**—Replace the audio unit.■

## Audio disc changer does not move between discs

NOTE: Disc labels should not be used in the audio unit. They may damage the player mechanism.

1. Insert six discs into the audio unit and see if the changer moves between discs.

   *Does the changer operate normally?*

   **YES**—Intermittent failure, the disc changer is OK at this time.■

   **NO**—Go to step 2.

2. Insert six known-good disks into the audio unit.

   *Does the changer operate normally?*

   **YES**—At least one of the original discs is faulty.■

   **NO**—Replace the audio unit.■

BACK

Protected by AR



## Symptom Troubleshooting (cont'd)

### Volume does not change

NOTE: Set the fader and balance positions to the center.

1. Listen for sound from the speakers.

   *Is the sound normal?*

   **YES**—Go to step 2.

   **NO**—Go to audio system sound is weak or distorted, or no sound is heard from speakers with ELS audio system (see page 23-51), with premium audio system (see page 23-56).■

2. Operate the volume knob to see if the volume changes.

   *Does the volume change?*

   **YES**—Operation is normal.■

   **NO**—
   - With ELS audio system: Replace the audio unit.■
   - With premium audio system: Go to step 3.

3. Turn the ignition switch OFF.

4. Disconnect audio switch panel connector B (5P) and audio unit connector C (28P).

5. Check for continuity between audio switch panel connector B (5P) and audio unit connector C (28P) as shown.

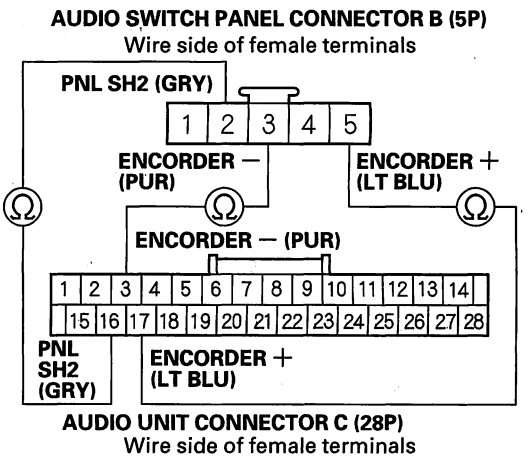


   *Is there continuity?*

   **YES**—Go to step 6.

   **NO**—Repair open in the wire(s) between the audio unit and audio switch panel.■



BACK

Protected by AR

6. Check for continuity between audio switch panel connector B (5P) and body ground as shown.

**AUDIO SWITCH PANEL CONNECTOR B (5P)**

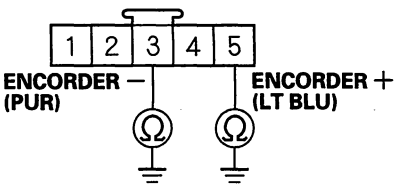


Wire side of female terminals

*Is there continuity?*

**YES**—Repair short to body ground in the wire(s) between the audio unit and audio switch panel. ■

**NO**—Go to step 7.

7. Check for continuity between the terminals of audio switch panel connector B (5P) according to the table.

| From terminal | To terminals |
|---|---|
| B2 (GRY) | B3 (PUR), B5 (LT BLU) |
| B3 (PUR) | B5 (LT BLU) |

**AUDIO SWITCH PANEL CONNECTOR B (5P)**

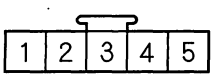


Wire side of female terminals

*Is there continuity between any of the terminals?*

**YES**—Repair short in the wire(s) between the audio unit and audio switch panel (replace the appropriate shielded harness).

**NO**—Substitute a known-good audio unit and recheck. If the symptom/indication goes away, replace the original audio unit. If the symptom is still present, substitute a known-good audio switch panel and recheck. If the symptom/indication goes away, replace the original audio switch panel. ■

## Radio tuner does not change stations

1. Check the audio information on the display panel.

   *Does the audio information display properly?*

   **YES**—Go to step 2.

   **NO**—Go to power switch will not turn ON (see page 23-48). ■

2. Operate the tuning knob to see if the radio station changes.

   *Does the radio station change?*

   **YES**—Intermittent failure: the tuning knob is OK at this time. ■

   **NO**—
   - With ELS audio system: Replace the audio unit. ■
   - With premium audio system: Go to step 3.

3. Turn the ignition switch OFF.

4. Disconnect audio switch panel connector A (20P) and audio unit connector C (28P).

(cont'd)

Protected by AR



## Symptom Troubleshooting (cont'd)

5. Check for continuity between audio unit connector C (28P) and audio switch panel connector A (20P) according to the table.

| Audio unit connector | Audio switch panel connector | Wire color |
|---|---|---|
| C20 | A4 | WHT |
| C4 | A5 | BLK |
| C18 | A6 | RED |
| C5 | A7 | YEL |
| C19 | A8 | GRN |
| C6 | A9 | GRY |

**AUDIO UNIT CONNECTOR C (28P)**

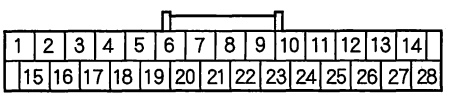


Wire side of female terminals

**AUDIO SWITCH PANEL CONNECTOR A (20P)**

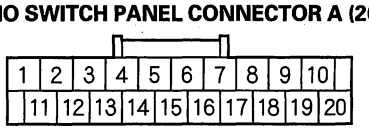


Wire side of female terminals

*Is there continuity?*

**YES**—Go to step 6.

**NO**—Repair open in the wire(s) between the audio unit and audio switch panel. ■

6. Check for continuity between audio switch panel connector A (20P) and body ground according to the table.

| Audio switch panel connector | Wire color |
|---|---|
| A4 | WHT |
| A5 | BLK |
| A6 | RED |
| A7 | YEL |
| A8 | GRN |

**AUDIO SWITCH PANEL CONNECTOR A (20P)**

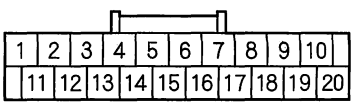


Wire side of female terminals

*Is there continuity?*

**YES**—Repair short to body ground in the wire(s) between the audio unit and audio switch panel. ■

**NO**—Go to step 7.



BACK

Protected by AR

7. Check for continuity between the terminals of audio switch panel connector A (20P) according to the table.

| From terminal | To terminals |
|---|---|
| A9 (GRY) | A4 (WHT), A5 (BLK), A6 (RED), A7 (YEL), A8 (GRN) |
| A4 (WHT) | A5 (BLK), A6 (RED), A7 (YEL), A8 (GRN) |
| A5 (BLK) | A6 (RED), A7 (YEL), A8 (GRN) |
| A6 (RED) | A7 (YEL), A8 (GRN) |
| A7 (YEL) | A8 (GRN) |

**AUDIO SWITCH PANEL CONNECTOR A (20P)**

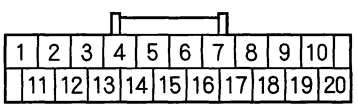


Wire side of female terminals

*Is there continuity between any of the terminals?*

**YES**—Repair short in the wire(s) between the audio unit and audio switch panel (replace the appropriate shielded harness).

**NO**—Substitute a known-good audio unit and recheck. If the symptom/indication goes away, replace the original audio unit. If the symptom is still present, substitute a known-good audio switch panel and recheck. If the symptom/indication goes away, replace the original audio switch panel. ■

## Volume does not increase with speed

1. Test-drive the vehicle at highway speeds and monitor if the volume increases.

   *Does the volume increase?*

   **YES**—Intermittent failure, the system is OK at this time. ■

   **NO**—Go to step 2.

2. Verify if SVC mode setting in audio unit sound set-up.

   *Is the SVC set to off?*

   **YES**—Change setting to "Mid" and retest. ■

   **NO**—Go to step 3.

3. Perform self-diagnostic function for vehicle speed pulse indication (see page 23-38).

   *Does self-diagnostic function indicate a VSP signal?*

   **YES**—Substitute a known-good audio unit and retest. If the symptom/indication goes away, replace the original audio unit. ■

   **NO**—Go to step 4.

(cont'd)

Protected by AR



## Symptom Troubleshooting (cont'd)

4. Remove the audio unit (see page 23-99), and disconnect the audio unit connector A (17P).

5. Drive the vehicle and have an assistant measure the voltage at the audio unit connector A (17P) terminal No. 13.

**AUDIO UNIT CONNECTOR A (17P)**

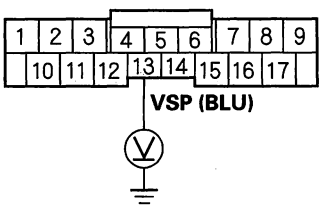


Wire side of female terminals

*Is there 0—5 V pulse?*

**YES**—Replace the audio unit (see page 23-99). ■

**NO**—Repair open or shorts in the wire between the audio unit connector A (17P) No. 13 terminal and the PCM connector A (44P) No. 29 terminal. If no opens or shorts are found, substitute a known-good PCM and recheck. If the symptom/indicated goes away, replace the original PCM (see page 11-252). ■

### Volume is too high, or too low when driving at freeway speeds

1. Test-drive the vehicle at highway speeds and monitor volume level.

   *Is the volume level too high, or too low?*

   **YES**—Go to step 2.

   **NO**—Intermittent failure, the system is OK at this time. ■

2. Change SVC mode setting in sound set-up to "Mid" and retest.

   *Is the volume level still too high, or too low?*

   **YES**—Replace the audio unit (see page 23-99). ■

   **NO**—Improper SVC setting for client's sound taste. ■



BACK

Protected by AR

## Audio disc does not load

NOTE:
- Disc labels should not be used in the audio unit. They may damage the player mechanism.
- Make sure the CD disc is compatible with the system (see the owner's manual for more information).

1. Insert a known-good disc to see if the symptom can be duplicated.

   *Does the disc load?*

   **YES**—Operation is normal. If the disc loads normally, but will not play, go to audio disc does not play (see page 23-81). ■

   **NO**—Go to step 2.

2. Insert another disc.

   *Does the disc load?*

   **YES**—The original disc is faulty. ■

   **NO**—Replace the audio unit. ■

**Special tools required**
Diagnostics CD 07AAZ-SDBA100

## Audio disc does not play

1. Try loading a disc.

   *Does the disc load?*

   **YES**—Go to step 2.

   **NO**—Go to audio disc does not load (see page 23-81). ■

2. Insert another disc to see if the symptom can be duplicated.

   *Does the disc play?*

   **YES**—Operation is normal. ■

   **NO**—Go to step 3.

3. Insert audio diagnostic CD (T/N 07AAZ-SDBA100) in the audio unit.

   *Does the disc play?*

   **YES**—The original disc is faulty or has an unreadable format. ■

   **NO**—Replace the audio unit. ■

Protected by AR



## Symptom Troubleshooting (cont'd)

**Special tools required**
- Diagnostics CD 07AAZ-SDBA100
- Skip test CD 07AAZ-SDBA200
- Skip test CD 07AAZ-SDBA300

### Audio disc skips

1. Confirm the vehicles tires are properly inflated.

2. Check the client's CD for scratches and fingerprints.

   NOTE: The following test should be done with the audio unit bass and treble set to the client's listening settings. When comparing to known-good vehicles, do the comparison on the same model and trim level.

3. Test-drive to identify when the client's CD skips. The audio diagnostic CD (T/N 07AAZ-SDBA100) can be used if the client's CD is not available; use tracks 10—12.

   *Does the CD skip?*

   **YES**—Go to step 4.

   **NO**—Operation is normal.■

4. Compare the client's skipping CD to a known-good vehicle under the same conditions.

   *Does the CD skip in the known-good vehicle under the same conditions?*

   **YES**—The CD player operation is normal, the problem is with the client's CD.■

   **NO**—Go to step 5.

   NOTE: Do the following test with vehicle parked and the engine running.

5. Insert the diagnostic skip test CD (T/N 07AAZ-SDBA300). Play tracks 2—11, and note on which number track(s) the CD starts skipping. Do the same test on a known-good vehicle.

   *Does the CD skip on same track(s) as the known-good vehicle?*

   **YES**—Operation is normal.■

   **NO**—Go to step 6.

6. Insert the diagnostic skip test CD (T/N 07AAZ-SDBA200). Play tracks 7—11 and tracks 13—15 and note on which number track(s) the CD starts skipping. Do the same test on a known-good vehicle.

   *Does the CD skip on same track(s) as the known-good vehicle?*

   **YES**—Operation is normal.■

   **NO**—Replace the audio unit.■



BACK

Protected by AR

## Audio system information does not display on the audio-HVAC subdisplay unit (with ELS audio system)

1. Remove the audio-HVAC subdisplay unit (see page 23-101).

2. Check the connections at audio-HVAC subdisplay unit 12P connector and audio unit connector C (28P).

   *Are the connectors and terminals connected properly?*

   **YES**—Go to step 3.

   **NO**—Repair the connection and recheck.■

3. Turn the ignition switch ON (II).

4. Measure the voltage between audio-HVAC subdisplay unit 12P connector terminal No. 6 and the body ground.

**AUDIO-HVAC SUBDISPLAY UNIT 12P CONNECTOR**

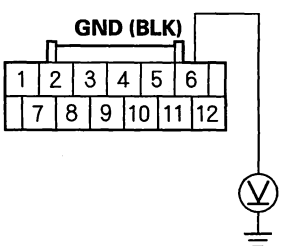


Wire side of female terminals

*Is there less than 0.5 V?*

**YES**—Go to step 5.

**NO**—Repair open in the wire between audio-HVAC subdisplay unit 12P connector terminal No. 6 and body ground (G502) (see page 22-60).■

5. Turn the ignition switch OFF.

6. Disconnect the audio unit connector C (28P) and audio-HVAC subdisplay unit 12P connector.

7. Check for continuity between audio unit connector C (28P) and audio-HVAC subdisplay unit 12P connector as shown.

**AUDIO-HVAC SUBDISPLAY UNIT 12P CONNECTOR**
Wire side of female terminals

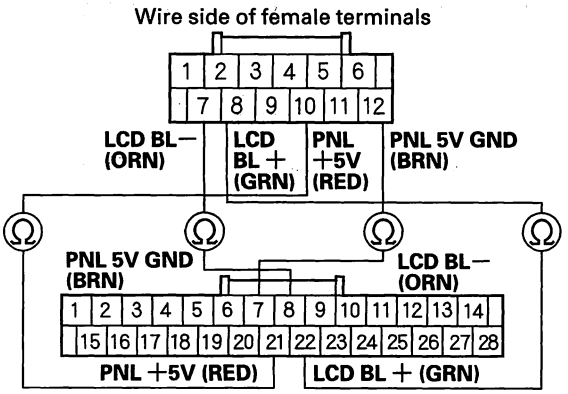


**AUDIO UNIT CONNECTOR C (28P)**
Wire side of female terminals

*Is there continuity?*

**YES**—Go to step 8.

**NO**—Repair open in the wire(s) between the audio unit and audio-HVAC subdisplay unit.■

(cont'd)

Protected by AR



## Symptom Troubleshooting (cont'd)

8. Check for continuity between audio-HVAC subdisplay unit 12P connector and body ground as shown.

**AUDIO-HVAC SUBDISPLAY UNIT 12P CONNECTOR**

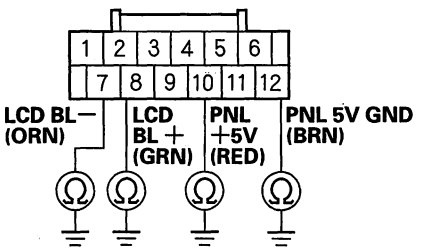


Wire side of female terminals

*Is there continuity?*

**YES**—Repair short to body ground in the wire(s) between the audio unit and audio-HVAC subdisplay unit.■

**NO**—Go to step 9.

9. Check for continuity between audio unit connector C (28P) and audio-HVAC subdisplay unit 12P connector according to the table.

| Audio unit connector | Audio-HVAC subdisplay unit connector | Wire color |
|---|---|---|
| C5 | 4 | ORN |
| C18 | 2 | YEL |
| C19 | 3 | BLU |
| C20 | 5 | PUR |
| C6 | 1 | GRY |

**AUDIO-HVAC SUBDISPLAY UNIT 12P CONNECTOR**

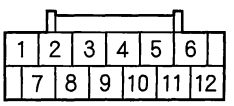


Wire side of female terminals

**AUDIO UNIT CONNECTOR C (28P)**

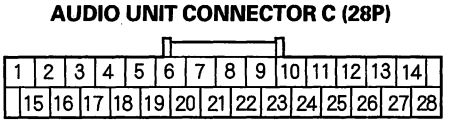


Wire side of female terminals

*Is there continuity?*

**YES**—Go to step 10.

**NO**—Repair open in the wire(s) between the audio unit and audio-HVAC subdisplay unit.■



BACK

Protected by AR

10. Check for continuity between audio-HVAC subdisplay unit 12P connector and body ground according to the table.

| Audio-HVAC subdisplay unit connector | Wire color |
|---|---|
| 4 | ORN |
| 2 | YEL |
| 3 | BLU |
| 5 | PUR |

**AUDIO-HVAC SUBDISPLAY UNIT 12P CONNECTOR**

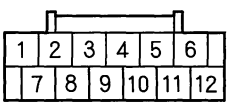


Wire side of female terminals

*Is there continuity?*

**YES**—Repair short to body ground in the wire(s) between the audio unit and audio-HVAC subdisplay unit.■

**NO**—Go to step 11.

11. Check for continuity between the terminals of audio-HVAC subdisplay unit 12P connector according to the table.

| From terminal | To terminals |
|---|---|
| 1 (GRY) | 2 (YEL), 3 (BLU)<br>4 (ORN), 5 (PUR) |
| 2 (YEL) | 3 (BLU), 4 (ORN), 5 (PUR) |
| 3 (BLU) | 4 (ORN), 5 (PUR) |
| 4 (ORN) | 5 (PUR) |

**AUDIO-HVAC SUBDISPLAY UNIT 12P CONNECTOR**

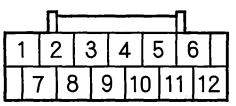


Wire side of female terminals

*Is there continuity between any of the terminals?*

**YES**—Repair short in the wire(s) between the audio unit and audio-HVAC subdisplay unit (replace the appropriate shielded harness).■

**NO**—Substitute a known-good audio unit and recheck. If the symptom/indication goes away, replace the original audio unit. If the symptom is still present, substitute a known-good audio-HVAC subdisplay unit and recheck. If the symptom/indication goes away, replace the original audio-HVAC subdisplay unit.■

Protected by AR



## Symptom Troubleshooting (cont'd)

### Audio system information does not display on the audio-HVAC display unit (with premium audio system)

1. Remove the audio-HVAC display unit (see page 23-101).

2. Check the connections at audio-HVAC display unit 12P connector, audio unit connector C (28P) and audio switch panel connector A (20P).

   *Are the connectors and terminals connected properly?*

   **YES**—Go to step 3.

   **NO**—Repair the connection and recheck.■

3. Disconnect the audio-HVAC display unit 12P connector and audio unit connector C (28P).

4. Check for continuity between audio unit connector C (28P) and audio-HVAC display unit 12P connector as shown.

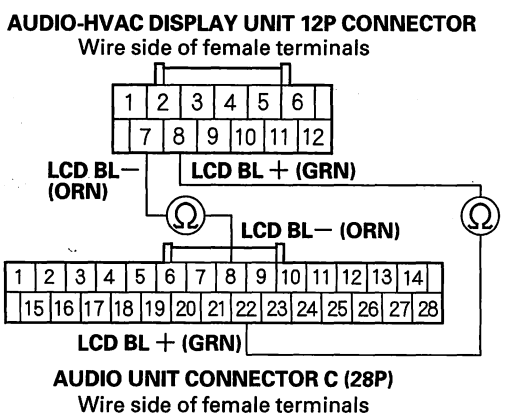


   *Is there continuity?*

   **YES**—Go to step 5.

   **NO**—Repair open in the wire(s) between the audio unit and audio-HVAC display unit.■

5. Check for continuity between body ground and audio-HVAC display unit 12P connector No. 7, No. 8 terminal individually.

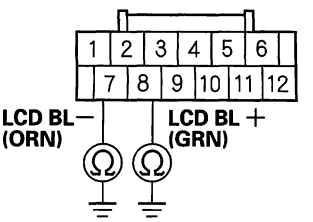


Wire side of female terminals

   *Is there continuity?*

   **YES**—Repair short to body ground in the wire between the audio unit and the audio-HVAC display unit.■

   **NO**—Go to step 6.

6. Disconnect the audio switch panel connector A (20P).



BACK

Protected by AR

7. Check for continuity between audio switch panel connector A (20P) and audio-HVAC display unit 12P connector as shown.

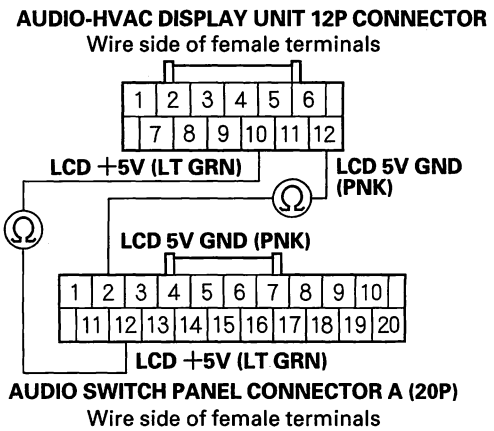


*Is there continuity?*

**YES**—Go to step 8.

**NO**—Repair open in the wire(s) between the audio switch panel and audio-HVAC display unit.■

8. Check for continuity between body ground and audio-HVAC display unit 12P connector No. 10, No. 12 terminal individually.

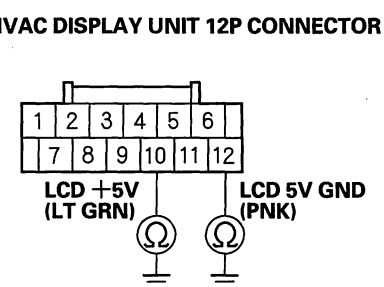


*Is there continuity?*

**YES**—Repair short to body ground in the wire between the audio unit and audio-HVAC display unit.■

**NO**—Go to step 9.

9. Check for continuity between audio switch panel connector A (20P) and audio-HVAC display unit 12P connector according to the table.

| Audio switch panel connector | Audio-HVAC display unit connector | Wire color |
|---|---|---|
| A13 | 3 | BLK |
| A14 | 4 | RED |
| A15 | 2 | WHT |
| A16 | 5 | GRN |
| A8 | 1 | GRY |

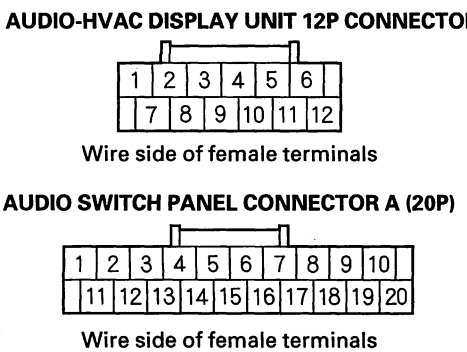


*Is there continuity?*

**YES**—Go to step 10.

**NO**—Repair open in the wire(s) between the audio switch panel and audio-HVAC display unit.■

(cont'd)

Protected by AR



## Symptom Troubleshooting (cont'd)

10. Check for continuity between audio-HVAC display unit 12P connector and body ground according to the table.

| Audio-HVAC display unit connector | Wire color |
|---|---|
| 2 | WHT |
| 3 | BLK |
| 4 | RED |
| 5 | GRN |

**AUDIO-HVAC DISPLAY UNIT 12P CONNECTOR**

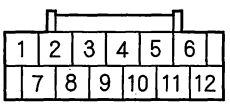


Wire side of female terminals

*Is there continuity?*

**YES**—Repair short to body ground in the wire(s) between the audio-HVAC display unit and audio switch panel.■

**NO**—Go to step 11.

11. Check for continuity between the terminals of audio-HVAC display unit 12P connector according to the table.

| From terminal | To terminals |
|---|---|
| 1 (GRY) | 2 (WHT), 3 (BLK)<br>4 (RED), 5 (GRN) |
| 2 (WHT) | 3 (BLK), 4 (RED), 5 (GRN) |
| 3 (BLK) | 4 (RED), 5 (GRN) |
| 4 (RED) | 5 (GRN) |

**AUDIO-HVAC DISPLAY UNIT 12P CONNECTOR**

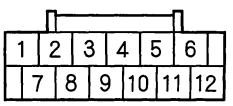


Wire side of female terminals

*Is there continuity between any of the terminals?*

**YES**—Repair short in the wire(s) between the audio switch panel and audio-HVAC display unit (replace the appropriate shielded harness).■

**NO**—Substitute a known-good audio switch panel and recheck. If the symptom/indication goes away, replace the original audio switch panel. If the symptom is still present, substitute a known-good audio-HVAC display unit and recheck. If the symptom/indication goes away, replace the original audio-HVAC display unit.■



BACK

Protected by AR

## Audio remote switch does not work properly

NOTE: Always check the connectors for poor connections or loose terminals.

1. Test the audio remote switch (see page 23-109).

   *Is the audio remote switch OK?*

   **YES**—Go to step 2.

   **NO**—Replace the audio remote switch.■

2. Check the audio unit operation (volume up, volume down, CH (—), CH (+), MODE).

   *Is the audio unit operation OK?*

   **YES**—Operation is normal.■

   **NO**—Go to step 3.

3. Remove the audio unit (see page 23-99).

4. Disconnect the audio unit connector D (32P).

5. Reconnect the audio remote switch, and measure the resistance between the audio unit connector D (32P) No. 3 and No. 19 terminals as specified in the table.

**AUDIO UNIT CONNECTOR D (32P)**

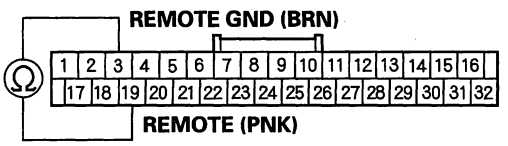


Wire side of female terminals

**AUDIO REMOTE SWITCH TABLE**

| Button held down | VOL DOWN | VOL UP | CH (—) | CH (+) | MODE | (NONE) |
|---|---|---|---|---|---|---|
| Resistance | about 100 Ω | about 370 Ω | about 840 Ω | about 2 kΩ | about 4 kΩ | 10 kΩ |

*Is the resistance OK?*

**YES**—Go to step 6.

**NO**—Repair short or high resistance in the circuit between the audio unit and the audio remote switch. If the wires are OK, replace the cable reel (see page 24-158).■

(cont'd)

Protected by AR



## Symptom Troubleshooting (cont'd)

6. Check for continuity between body ground and the No. 3 and No. 19 terminals of audio unit connector D (32P) individually.

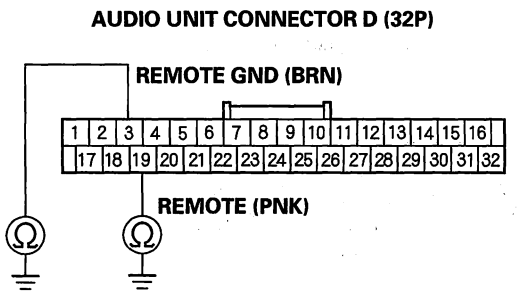


Wire side of female terminals

*Is there continuity?*

**YES**—Repair short to body ground in the circuit between the audio unit and the audio remote switch. If the wires are OK, replace the cable reel (see page 24-158).■

**NO**—Replace the audio unit (see page 23-99).■

### Error code: XM NO SIGNAL is displayed

NOTE: Check XM radio reception in an open area with good exposure to the southern horizon. Poor reception/interference can be caused by tall buildings, mountains, or high-voltage power lines.

1. Park vehicle outside with a clear view of the southern horizon.

   *Does the XM radio receive a signal?*

   **YES**—Reception interference operation is normal.■

   **NO**—
   - With AcuraLink: Go to step 2.
   - Without AcuraLink: Go to step 9.

2. Check AM/FM/XM antenna 2P connector and AcuraLink control unit (XM receiver) connector C (2P).

   *Are the connectors connected?*

   **YES**—Go to step 3.

   **NO**—Reconnect the AM/FM/XM antenna 2P connector and AcuraLink control unit connector C (2P) connector and recheck XM radio operation. If the signal is restored, the system is OK. If the signal is not restored go to step 3.



BACK

Protected by AR

3. Turn the ignition switch OFF.

4. Disconnect AcuraLink control unit (XM receiver) connector A (20P).

5. Measure the voltage between AcuraLink control unit (XM receiver) connector A (20P) terminal No. 1 and body ground.

**ACURALINK CONTROL UNIT (XM RECEIVER) CONNECTOR A (20P)**

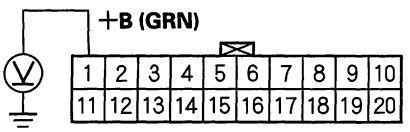


Wire side of female terminals

*Is there battery voltage?*

**YES**—Go to step 6.

**NO**—Repair open in the wire between No. 23 (10 A) fuse in the under-hood fuse/relay box and AcuraLink control unit (XM receiver) connector A (20P) terminal No. 1.■

6. Reconnect the AcuraLink control unit (XM receiver) connector A (20P).

7. Measure the voltage between AcuraLink control unit (XM receiver) connector A (20P) terminal No. 11 and body ground.

**ACURALINK CONTROL UNIT (XM RECEIVER) CONNECTOR A (20P)**

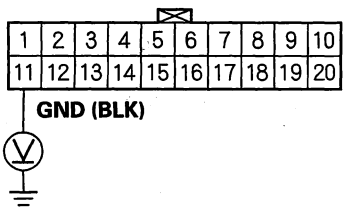


Wire side of female terminals

*Is there less than 0.5 V?*

**YES**—Go to step 8.

**NO**—Repair open in the wire between AcuraLink control unit (XM receiver) connector A (20P) terminal No. 11 and body ground (G505) (see page 22-60).■

8. Substitute known-good AM/FM/XM antenna.

*Does the XM radio receive a signal?*

**YES**—Replace AM/FM/XM antenna (see page 23-110).■

**NO**—Substitute known-good XM antenna lead. If AcuraLink control unit (XM receiver) receives signal, replace original XM antenna lead. If the AcuraLink control unit (XM receiver) does not receives signal, substitute a known-good AcuraLink control unit (XM receiver).■

(cont'd)

Protected by AR



## Symptom Troubleshooting (cont'd)

9. Check the connection at AM/FM/XM antenna connector B (2P) and XM receiver connector B (2P).

   *Is the connectors connected?*

   **YES**—Go to step 10.

   **NO**—Reconnect the connectors and recheck XM radio operation. If the signal is restored, the system is OK. If the signal is not restored go to step 10.

10. Turn the ignition switch to ACC (I).

11. Measure the voltage between XM receiver connector A (14P) terminal No. 1 and body ground.

**XM RECEIVER CONNECTOR A (14P)**

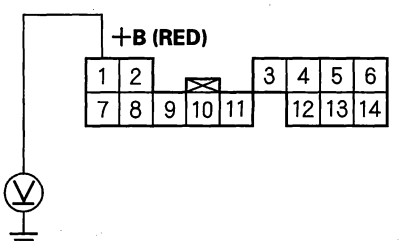


Wire side of female terminals

*Is there battery voltage?*

**YES**—Go to step 12.

**NO**—Repair open in the wire between audio unit connector B (14P) terminal No. 1 and XM receiver connector A (14P) terminal No. 1.■

12. Measure the voltage between XM receiver connector A (14P) terminal No. 11 and body ground.

**XM RECEIVER CONNECTOR A (14P)**

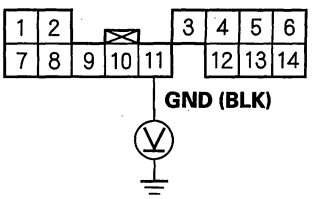


Wire side of female terminals

*Is there less than 0.5 V?*

**YES**—Go to step 13.

**NO**—Repair open in the wire between audio unit connector B (14P) terminal No. 11 and XM receiver connector A (14P) terminal No. 11.■

13. Substitute known-good AM/FM/XM antenna.

   *Does the XM radio receives signal?*

   **YES**—Replace AM/FM/XM antenna (see page 23-110).■

   **NO**—Substitute known-good XM antenna lead. If XM receiver receives signal, replace original XM antenna lead. If the XM receiver does not receives signal, substitute a known-good XM receiver.■



BACK

Protected by AR

## Error code: XM ANTENNA is displayed

1. Check the connector at the XM receiver (without AcuraLink) or the AcuraLink control unit (XM receiver) (with AcuraLink).

   *Is the connector connected?*

   **YES**—Go to step 2

   **NO**—Reconnect the connector. If the error message does not go away, go to step 2.

2. Check the connector at the AM/FM/XM antenna.

   *Is the connector connected?*

   **YES**—Go to step 3.

   **NO**—Reconnect the connector. If the error message does not go away, go to step 3.

3. Check the pin locations in the XM receiver connector (without AcuraLink) or the AcuraLink control unit (XM receiver) connector (with AcuraLink) and the AM/FM/XM antenna connector.

   *Are the pins in the correct locations?*

   **YES**—Go to step 4.

   **NO**—Correct the pin locations. If the error message does not go away, go to step 4.

4. Substitute a known-good AM/FM/XM antenna.

   *Is the error message gone?*

   **YES**—Replace the AM/FM/XM antenna. ■

   **NO**—Go to step 5.

5. Substitute a known-good XM receiver (without AcuraLink) or the AcuraLink control unit (XM receiver) (with AcuraLink).

   *Is the error message gone?*

   **YES**—Replace the XM receiver (without AcuraLink) or the AcuraLink control unit (XM receiver) (with AcuraLink). ■

   **NO**—Replace the XM antenna lead. ■

# Sound Quality Diagnosis

**Special tools required**
Diagnostics CD 07AAZ-SDBA100

Use the following tests to check sound quality.

NOTE: Before beginning the following tests, write down the bass, treble, fader and balance settings, then set them to their center positions for the testing.

## Left/Right Channel ID

Do this test to confirm proper channel routing.

1. Insert the audio diagnostic CD (T/N 07AAZ-SDBA100) into the audio unit.

2. Play track No. 1 (left, both, right channel ID) at a normal, or slightly higher than normal, volume level.

3. The voice should be audible only from the channel or channels when indicated.

   - If the channel ID is correct for each side, go to phase test (see page 23-94).
   - If the channel ID is not correct, check for
     - Shorted speaker wire
     - Faulty amplifier
     - Faulty audio unit

Protected by AR



## Sound Quality Diagnosis (cont'd)

**Special tools required**
Diagnostics CD 07AAZ-SDBA100

Use the following tests to check sound quality.

NOTE: Before beginning the following tests, write down the client's bass, treble, fader and balance settings, then set them to their center positions for the testing.

### Phase Test

Do this test to confirm proper speaker phasing.

1. Insert the audio diagnostic CD (T/N 07AAZ-SDBA100) into the audio unit.
2. Play track No. 2 (phase) at a normal, or slightly higher than normal, volume level.
3. The voice should sound centered and focused when it is in-phase.
4. The voice should sound diffused, and have "less base" when it is out of phase.
   - If the voice changes from in-phase to out of phase as indicated by the prompt, the phasing is correct. Go to electrical noise test (see page 23-94).
   - If the voice always sounds out of phase, phasing is not correct. Check for
     – Crossed speaker wire
     – Faulty amplifier
     – Faulty audio unit

**Special tools required**
Diagnostics CD 07AAZ-SDBA100

### Electrical Noise Test

Do this test to check for electrical noise being induced into the audio system.

NOTE: Electrical noise may be caused by outside sources that cannot be handled by the audio system. Make sure you remove any cell phones and/or turn off any aftermarket devices before beginning this test.

1. Insert the audio diagnostic CD (T/N 07AAZ-SDBA100) into the audio unit.
2. Play track No. 4 (digital zero) at a normal, or slightly higher than normal, volume level.
3. Operate any electrical device that may create electrical noise in the audio system, including starting the engine.
4. Play track No. 5 (near digital zero) at a normal, or slightly higher than normal, volume level.
5. Operate any electrical device that may create electrical noise in the audio system, including starting the engine.
6. Play track No. 6 (SNR) at a normal, or slightly higher than normal, volume level.



BACK

Protected by AR

7. Operate any electrical device that may create electrical noise in the audio system, including starting the engine.

   - If no abnormal noise is heard, go to the individual speaker test (see page 23-95).
   - If the noise is present only during the SNR track, replace the audio unit.
   - If the noise is heard during the digital zero or near digital zero track, check for
     - Poor ground at the audio unit, amplifier, engine, or battery cable
     - Pinched or shorted speaker or amplifier wire
     - Faulty amplifier
     - Faulty audio unit
     - Other faulty components causing excessive electrical noise (ignition coils, alternator, door lock actuators, etc.). Disconnect any suspect components, and then replay the tracks that were originally noisy. If the noise is gone, check the component's circuit and the component.

**Special tools required**
Diagnostics CD 07AAZ-SDBA100

## Individual Speaker Test

Do this test to identify a faulty speaker.

1. Insert the audio diagnostic CD (T/N 07AAZ-SDBA100) into the audio unit.

2. Play track No. 30 (steady 300 Hz tone) at a normal, or slightly higher than normal, volume level.

3. Listen to each speaker for poor sound compared to the other channels. Use the audio unit's fader and balance settings to help isolate the channel with the problem.

   - If the sound quality produced by a specific speaker is poor, substitute it with a known-good speaker. If the poor sound quality continues, go to the sound balance test (see page 23-96).
   - If the sound quality is OK, go to the sound balance test (see page 23-96).

Protected by AR



## Sound Quality Diagnosis (cont'd)

**Special tools required**
Diagnostics CD 07AAZ-SDBA100

### Sound Balance Test

Perform this test to identify a faulty channel or speaker.

1. Insert the audio diagnostic CD (T/N 07AAZ-SDBA100) into the audio unit.
2. Confirm the bass and treble are set to the center positions.
3. Play track No. 3 (pink noise) at a normal, or slightly higher than normal, volume level.
4. A "static" type sound should be heard through all speakers.
5. Insert the audio diagnostic CD (T/N 07AAZ-SDBA100) into the audio unit of a known-good vehicle.
6. Set the bass and treble to the center positions.
7. Play track No. 3 (pink noise) all the same level as was played in step 3.
8. Compare the sounds made by the two vehicles.
   - If the sound does not have as much bass, check the subwoofer and circuit.
   - If the sound does not have enough "hiss," check the tweeters and their circuits.

**Special Tools Required**
Diagnostics CD 07AAZ-SDBA100

### Frequency Sweep

Do this test to find rattles or reverberations that may cause a perception of poor sound quality.

1. Insert the audio diagnostic CD (T/N 07AAZ-SDBA100) into the audio unit.
2. Play track No. 13 (sweep from 500 Hz to 35 Hz) at a normal, or slightly higher than normal, volume level.
3. Listen to each speaker for poor sound quality or reverberations caused by specific frequencies. Use the voice-over to estimate the frequency that causes the vibration. Use the audio unit's fader and balance settings to help isolate the channel with the problem.
   - If vibrations or poor sound quality are heard, go to step 4.
   - If no vibrations or poor sound quality are heard, go to sound judging (see page 23-97).
4. Choose the appropriate track from No. 14 to 25 (small range frequency sweep) or 26 to 53 (single frequencies) to recreate the frequency that caused the poor sound quality or vibration witnessed in step 3; this aids in diagnosis of the cause.

   NOTE: When you get to the track that recreates the problem, select the repeat function on the audio unit, this will help you isolate the cause.
5. Replace or insulate the source of the vibration or, if the speaker is the source of the poor sound quality, replace it.



BACK

Protected by AR

**Special tools required**
Diagnostics CD 07AAZ-SDBA100

## Sound Judging

Do this test to compare overall sound quality, imaging, and dynamics between the client's vehicle and a known-good vehicle. Only use a vehicle of the same model and trim level for this test.

1. In the client's vehicle, set the bass, treble, fader, and balance settings to the client's normal settings that were written down before beginning the test.

2. Insert the audio diagnostic CD (T/N 07AAZ-SDBA100) into the audio unit.

3. Play tracks No. 7 to 12 (sound quality, midland, dynamics, and imaging demonstration tracks) at a normal, or slightly higher than normal, volume level. Write down the volume setting being used.

4. Listen to areas of the track that stand out as being either very clear or poorer than other areas of the track.

5. In a known-good vehicle, insert the audio diagnostic CD (T/N 07AAZ-SDBA100) into the audio unit.

6. Play the tracks at the same volume level and the same bass, treble, balance, and fader settings as used in step 3 in the client's vehicle.

7. Listen to the same area of the track that stood out as being either very clear or poorer than other areas of the track.

8. Compare the client's vehicle's sound quality results the known-good vehicle's results.

   - If the sound quality in the client's vehicle is comparable to the sound quality in the known-good vehicle, then the client's vehicle is operating as designed.
   - If the sound quality is not comparable, check these items in order.
     - Loose or improperly installed speakers or other hardware that may create interference from the vibrations generated by the speakers
     - Poor power or ground to the stereo amplifier
     - Damaged speaker(s)
     - Faulty amplifier
     - Faulty audio unit

Protected by AR



## Sound Quality Diagnosis (cont'd)

### Seek Stop Test

Do this test to check the performance of the audio unit's AM and FM reception. Refer to symptom troubleshooting: audio sound weak or distorted, or no sound is heard from speakers (display is normal) with ELS audio system (see page 23-51), with premium audio system (see page 23-56) before continuing with this test.

NOTE:
- Window tint, aftermarket theft-recovery devices and other aftermarket devices may affect reception.
- Changes in cloud cover and other atmospheric conditions will affect the ability of the audio unit to receive radio signals.

1. Park the client's vehicle in an open area away from buildings or other obstructions.
2. Park a known-good vehicle (same year, model, and trim level) next to the client's vehicle, facing the same direction.
3. Start the engine in the client's vehicle, and turn on the radio.
4. Set the FM receiver to 87.7 MHz.
5. Press the "Seek +" button, and record the first station that the audio unit locks onto.
6. Press the "Seek +" button repeatedly, and write down each station that the audio unit locks onto until the station recorded in step 5 is reached again.
7. Set the AM receiver to 530 kHz.
8. Press the "Seek +" button, and record the first station that the audio unit locks onto.
9. Press the "Seek +" button repeatedly, and write down each station that the audio unit locks onto until the station recorded in step 8 is reached again.
10. Turn the ignition switch to LOCK (0).
11. Start the engine in the known-good vehicle, and then perform step 4 thru 10 on the known-good vehicle.
12. Compare the number of stations received in steps 6 and 9 in the client's vehicle with the number of stations received in the known-good vehicle.
    - If the number of stations received is the same, or within 10 %, the audio unit's tuner performance is OK. The problem may be atmospheric conditions, multi-path interference, or other obstructions to the radio signal.
    - If the client's vehicle receives fewer stations by at least 10 %, go to step 2 of poor AM/FM radio reception or interference (see page 23-45).



BACK

Protected by AR

# Audio Unit Removal/Installation

## With ELS audio system

SRS components are located in this area. Review the SRS component locations (see page 24-12), and the precautions and procedures (see page 24-14) before performing repairs or service.

NOTE:
- Put on gloves to protect your hands.
- Take care not to scratch the dashboard and related parts.
- Lay a workshop towel under the parts when working on them to protect the face panel from scratches or other damage.

1. Make sure you have the anti-theft codes for the audio system and navigation system (if equipped), then write down the audio presets.

2. Remove the center console panel (see step 3 on page 20-92) and the audio pocket (see step 10 on page 20-97).

3. Remove the bolts, then pull out the audio unit (A).

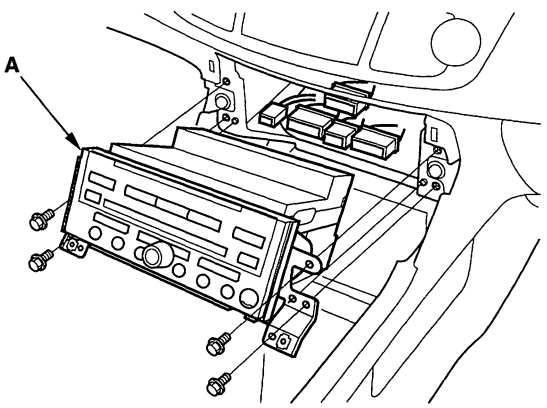


4. Disconnect the connectors, then remove the audio unit.

5. Remove the bolts and the brackets (A).

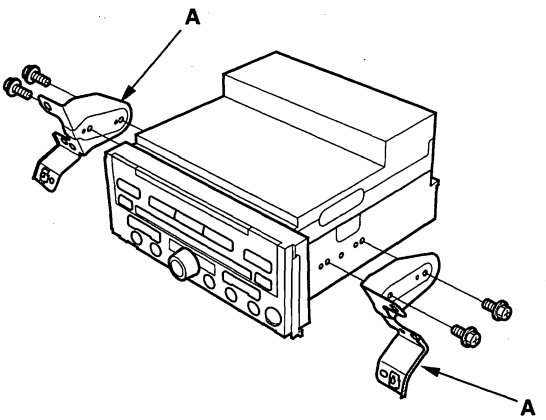


6. Install the audio unit in the reverse order of removal, and note these items:

   - Make sure all the connectors are secure.
   - Enter the anti-theft codes for the audio system, set the clock, then enter the audio presets.
   - If necessary, enter the navigation system code.

Protected by AR



## Audio Unit Removal/Installation (cont'd)

### With premium audio system

SRS components are located in this area. Review the SRS component locations (see page 24-12), and the precautions and procedures (see page 24-14) before performing repairs or service.

NOTE:
- Put on gloves to protect your hands.
- Take care not to scratch the dashboard and related parts.
- Lay a workshop towel under the parts when working on them to protect the face panel from scratches or other damage.

1. Make sure you have the anti-theft codes for the audio system, then write down the audio presets.

2. Remove the center console panel (see step 3 on page 20-92) and the audio pocket (see step 10 on page 20-97).

3. Remove the bolts, then pull out the audio unit (A).

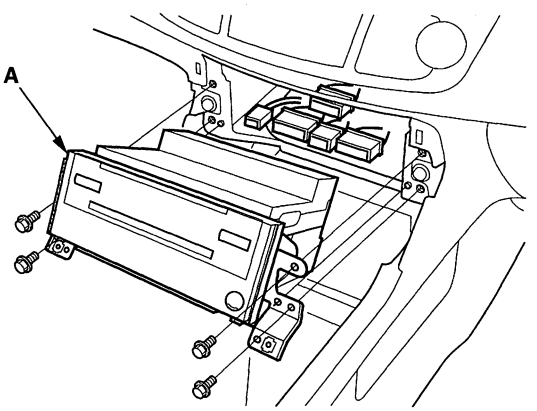


4. Disconnect the connectors, then remove the audio unit.

5. Remove the bolts and the brackets (A).

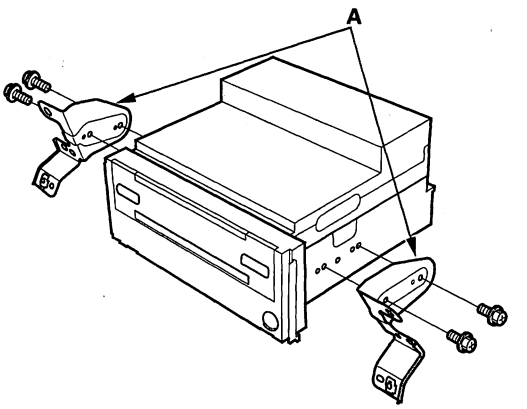


6. Install the audio unit in the reverse order of removal, and note these items:

   - Make sure all the connectors are secure.
   - Enter the anti-theft codes for the audio system, set the clock, then enter the audio presets.



BACK

Protected by AR

## Audio-HVAC Subdisplay Unit Removal/Installation

### (with navigation)

NOTE:
- Put on gloves to protect your hands.
- Take care not to scratch the dashboard.

1. Remove the dashboard center upper panel (see page 20-105).
2. Remove the screws, then pull out the audio-HVAC subdisplay unit (A).

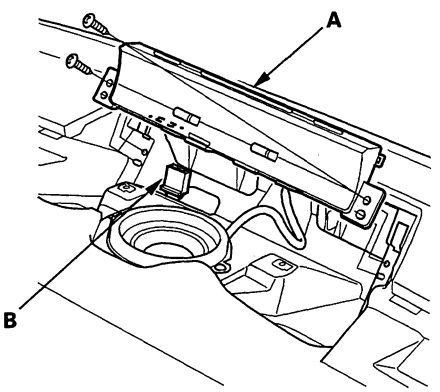


3. Disconnect the connector (B) and remove the audio-HVAC subdisplay unit.
4. Install the audio-HVAC subdisplay unit in the reverse order of removal.

## Audio-HVAC Display Unit Removal/Installation

### (without navigation)

NOTE:
- Put on gloves to protect your hands.
- Take care not to scratch the dashboard.

1. Remove the center panel (see page 20-101).
2. Remove the screws, then pull out the audio-HVAC display unit (A).

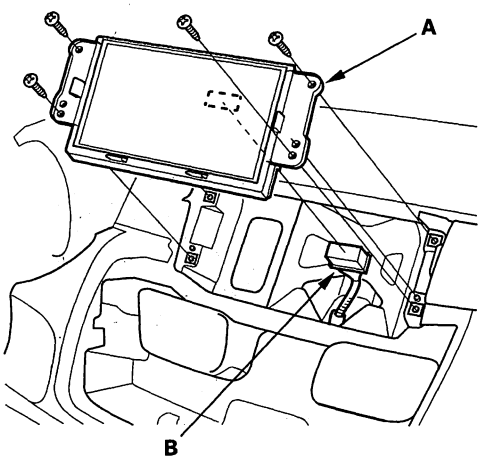


3. Disconnect the connector (B) and remove the audio-HVAC display unit.
4. Install the audio-HVAC display unit in the reverse order of removal.

Protected by AR



## Speaker Test/Replacement

### Door Speaker

1. Remove the door panel (see page 20-6).
2. Remove the bolt. Then lift the speaker straight up to release the lower clips (A).

**NOTICE**
If you pull the speaker out too far from the door, you will damage the lower clips.

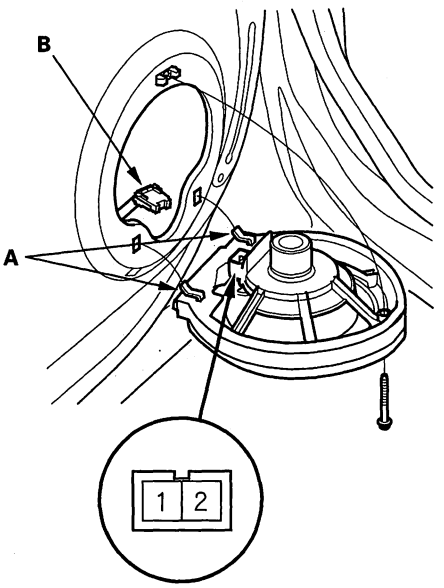


3. Disconnect the 2P connector (B), and remove the speaker.
4. Measure the resistance between the No. 1 and No. 2 terminals. There should be about 2 Ω.
5. If the resistance is not as specified, replace the door speaker.

### Front Center Speaker (with ELS audio system)

1. Remove the dashboard center upper panel (see page 20-105).
2. Remove the screws, then pull out the speaker (A).

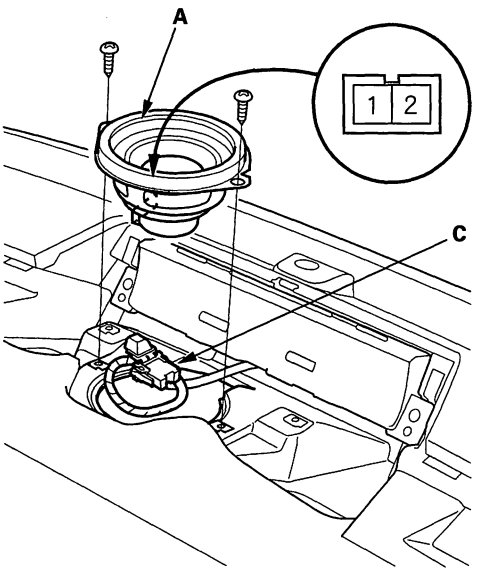


3. Disconnect the 2P connector (C), and remove the speaker.
4. Measure the resistance between the No. 1 and No. 2 terminals. There should be about 4 Ω.
5. If the resistance is not as specified, replace the front center speaker.



BACK

Protected by AR

## Front Door Tweeter (with premium audio system)

1. Detach the clip (A) and remove the door mirror garnish (B). Then disconnect the connector (C).

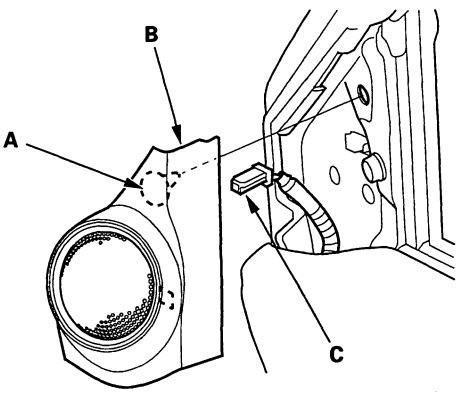


2. Carefully pry the tweeter grille (A) out of the door mirror garnish. Be careful not to damage the tweeter grille and the door mirror garnish.

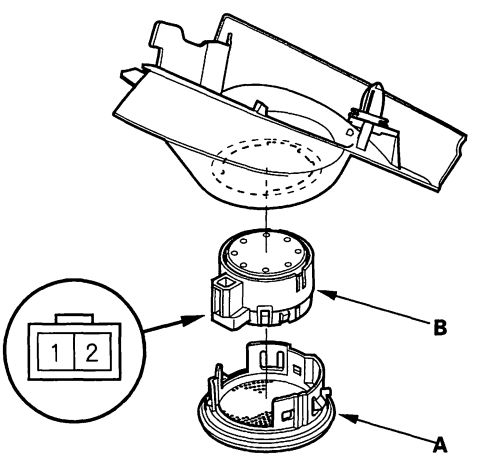


3. Remove the front door tweeter (B) from the speaker grille.

4. Measure the resistance between the front door tweeter 2P connector No. 1 and No. 2. There should be about 3.3 Ω.

5. If the resistance is not as specified, replace the front door tweeter.

(cont'd)

Protected by AR



## Speaker Test/Replacement (cont'd)

### Front Door Tweeter (with ELS audio system)

1. Detach the clip (A) and remove the door mirror garnish (B). Then disconnect the connector (C).

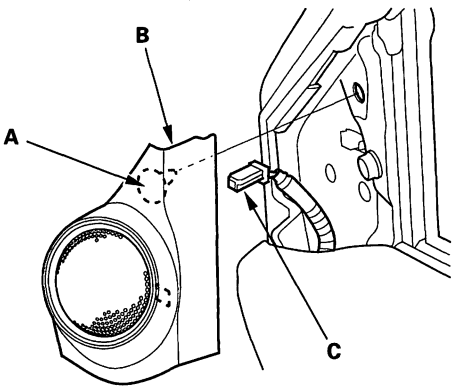


2. Carefully pry the tweeter grille (A) out of the door mirror garnish. Be careful not to damage the tweeter grille and the door mirror garnish.

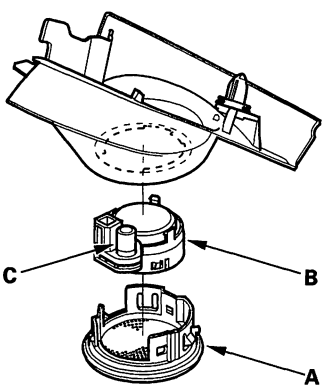


3. Remove the front door tweeter (B) from the speaker grille.

4. Check the capacitor (C) condition. If any malfunction is found, replace the front door tweeter.

5. Measure the resistance between the front door tweeter (A) terminal No. 2 and the outside terminal of the capacitor. There should be about 6 Ω.

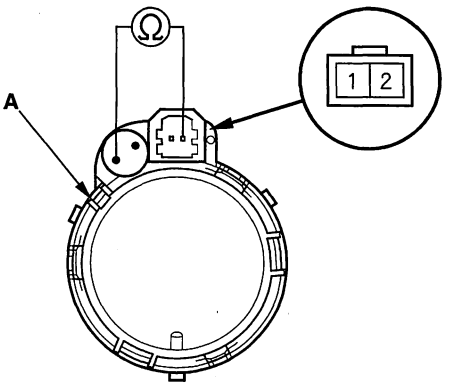


6. If the resistance is not as specified, replace the front door tweeter.



BACK

Protected by AR

## Rear Satellite Speaker (with ELS audio system)

1. Remove the quarter-pillar panel (see page 20-76).

2. Disconnect 2P connector (A), then remove the bolts and pull out the speaker (B).

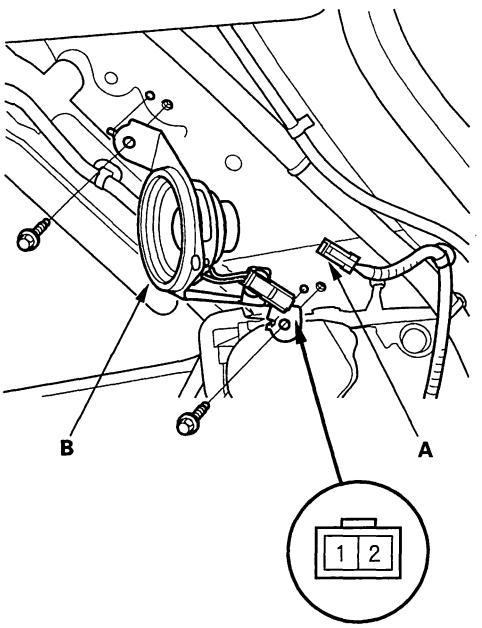


3. Measure the resistance between the No. 1 and No. 2 terminals. There should be about 4 Ω.

4. If the resistance is not as specified, replace the rear tweeter.

## Subwoofer (with premium audio system)

1. Remove the right rear side trim panel (see page 20-76).

2. Disconnect the 2P connector (A), then remove the bolts and pull out the subwoofer (B).

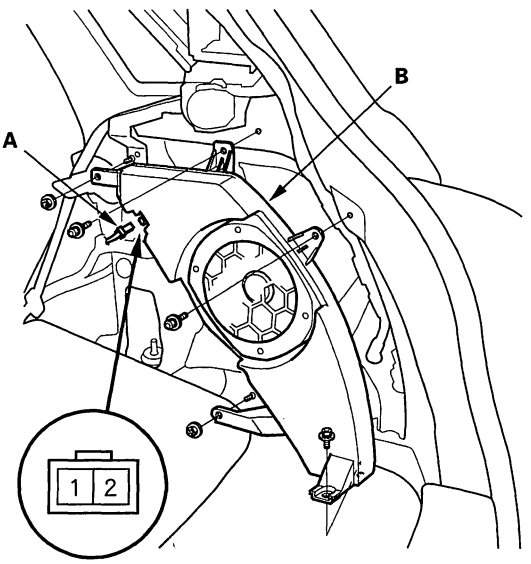


3. Measure the resistance between the No. 1 and No. 2 terminals. There should be about 2.3 Ω.

4. If the resistance is not as specified, replace the subwoofer.

(cont'd)

Protected by AR



## Speaker Test/Replacement (cont'd)

### Subwoofer (with ELS audio system)

1. Remove the right rear side trim panel (see page 20-76).

2. Disconnect 8P connector (A), then remove the bolts and pull out the subwoofer (B).

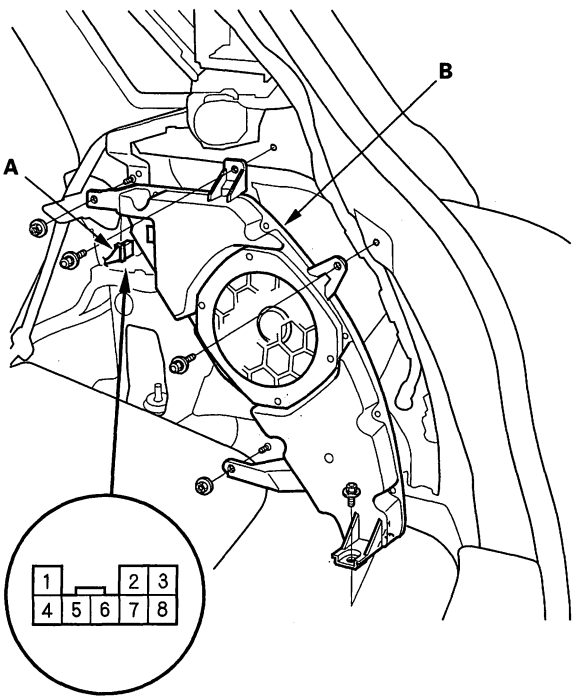


Wire side of female terminals

**Input Test**

3. With the connector still disconnected, make the input tests at the connector according to the table.

| Terminal | Test |
|---|---|
| 5 | Measure the voltage to ground with all conditions: There should be battery voltage. |
| 6 | Measure the voltage to ground with audio power switch ON: There should be battery voltage. |

4. Reconnect the connector to the subwoofer, and make the input test at the connector according to the table.

| Terminal | Test |
|---|---|
| 4 | Measure the voltage to ground with all conditions: There should be less than 1 V. |

5. If the result of the input test is OK and the subwoofer has no sound, replace the subwoofer.



BACK

Protected by AR

# Stereo Amplifier Removal/Installation

## With ELS audio system

1. Remove the navigation unit (see page 23-190).
2. Loosen the mounting bolts, then pull out the stereo amplifier (A).

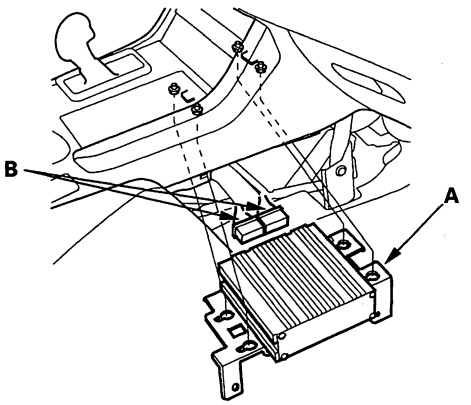


3. Disconnect the connectors (B) and remove the stereo amplifier.
4. Install the stereo amplifier in the reverse order of removal.

## With premium audio system

1. Remove the passenger's console trim (see page 20-92).
2. Loosen the mounting bolts, then pull out the stereo amplifier (A).

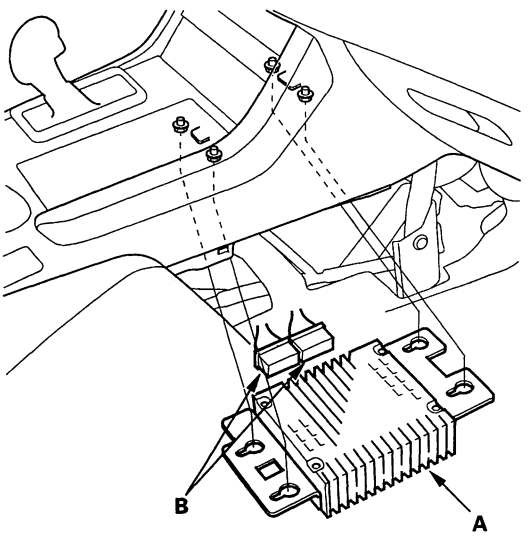


3. Disconnect the connectors (B) and remove the stereo amplifier.
4. Install the stereo amplifier in the reverse order of removal.

Protected by AR



## AcuraLink Control Unit (XM Receiver) Removal/Installation

NOTE: The AcuraLink must be reactivated by Acura Client Services when:
- The AcuraLink control unit (XM receiver) is replaced.
- DATA RESET was selected while in the self-diagnostic function.
- Vehicle ownership changes.

1. Remove the door sill and the right kick panel (see page 20-66).
2. Remove the glove box (see page 20-104).
3. Remove the passenger's dashboard undercover (see page 20-103).
4. Remove the bolt (A) and Loosen the bolt (B) from the AcuraLink control unit (XM receiver) (C).

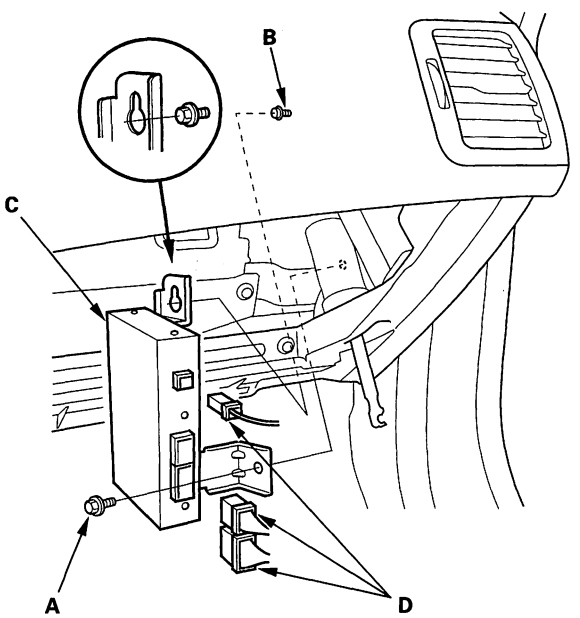


5. Disconnect the connectors (D).
6. Release the AM/FM antenna lead from its holder.
7. Lower the AcuraLink control unit (XM reciever) through the footwell area.
8. Install the AcuraLink control unit (XM receiver) in the reverse order of removal.

## XM Receiver Removal/Installation

1. Remove the door sill and the right kick panel (see page 20-66).
2. Remove the glove box (see page 20-104).
3. Remove the passenger's dashboard undercover (see page 20-103).
4. Remove the bolt (A) and loosen the bolt (B) from the XM receiver (C).

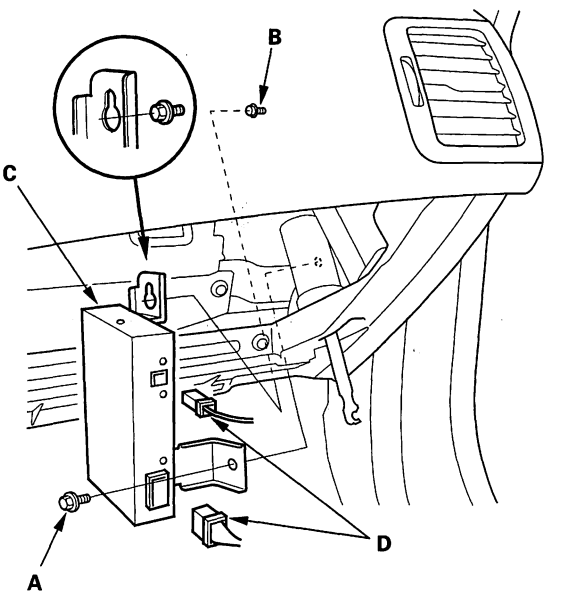


5. Disconnect the connectors (D) and pull out the XM receiver.
6. Lower the XM reciever through the footwell area.
7. Install the XM receiver in the reverse order of removal.



BACK

Protected by AR

## Audio Switch Panel Removal/ Installation

1. Remove the center panel (see page 20-101).
2. Remove the screws, then pull out the audio switch panel (A) from the center panel (B).

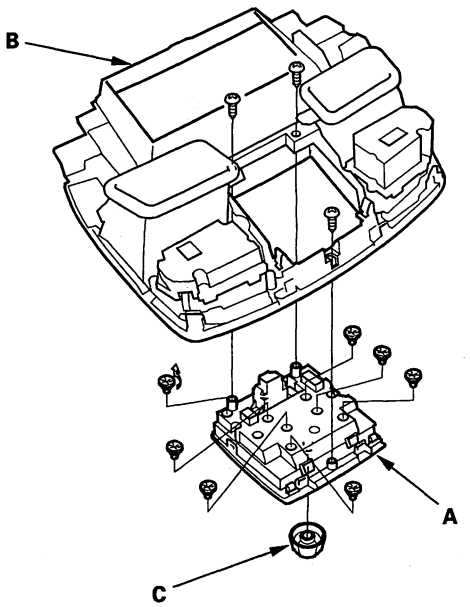


3. If necessary, remove the dial knob (C) and bulbs.
4. Install the audio switch panel in the reverse order of removal.

## Audio Remote Switch Test

1. Remove the steering wheel (see page 17-22).
2. Remove the audio remote switch (see page 17-23).

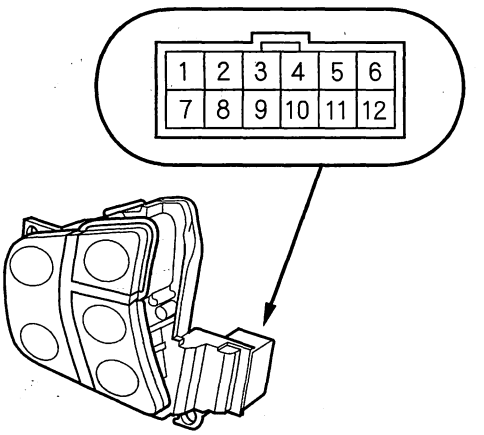


3. Measure the resistance between the No. 7 and No. 9 terminals in each switch position according to the table.

| Position | Resistance |
|---|---|
| OFF | About 10 kΩ |
| MODE | About 4 kΩ |
| CH (+) | About 2 kΩ |
| CH (−) | About 840 Ω |
| ▲ (VOL.UP) | About 370 Ω |
| ▼ (VOL.DOWN) | About 100 Ω |

4. If the resistance is not as specified, replace the audio remote switch.
5. Use a diode tester between the terminals in each switch position according to the table.

| Terminal | 6 | | 11 |
|---|---|---|---|
| | ○ | ⊲ | ○ |

6. If the diode test is not as specified, replace the audio remote switch (see page 17-23).

Protected by AR



## AM/FM/XM Antenna Replacement

1. Pull down the rear portion of the headliner (see page 20-85). Take care not to bend the headliner excessively.

2. Disconnect the AM/FM antenna lead connector (A) and the XM antenna lead connector (B), then remove the nut (C) from the AM/FM/XM antenna (D).

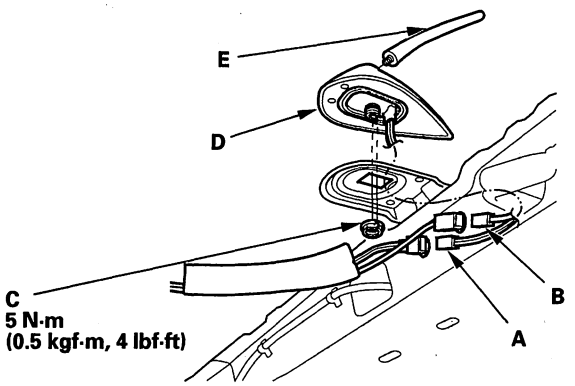


3. Remove the AM/FM/XM antenna and the antenna mast (E).

4. Install the antenna in the reverse order of removal.

## AM/FM Antenna Replacement

1. Pull down the rear portion of the headliner (see page 20-85). Take care not to bend the headliner excessively.

2. Disconnect the AM/FM antenna lead connector (A), then remove the nut (B) from the AM/FM antenna (C).

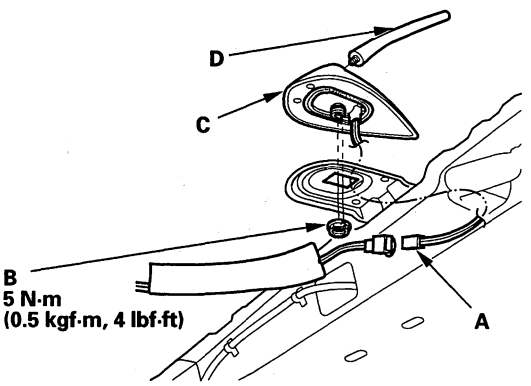


3. Remove the AM/FM antenna and the antenna mast (D).

4. Install the antenna in the reverse order of removal.



BACK

Protected by AR



## Component Location Index

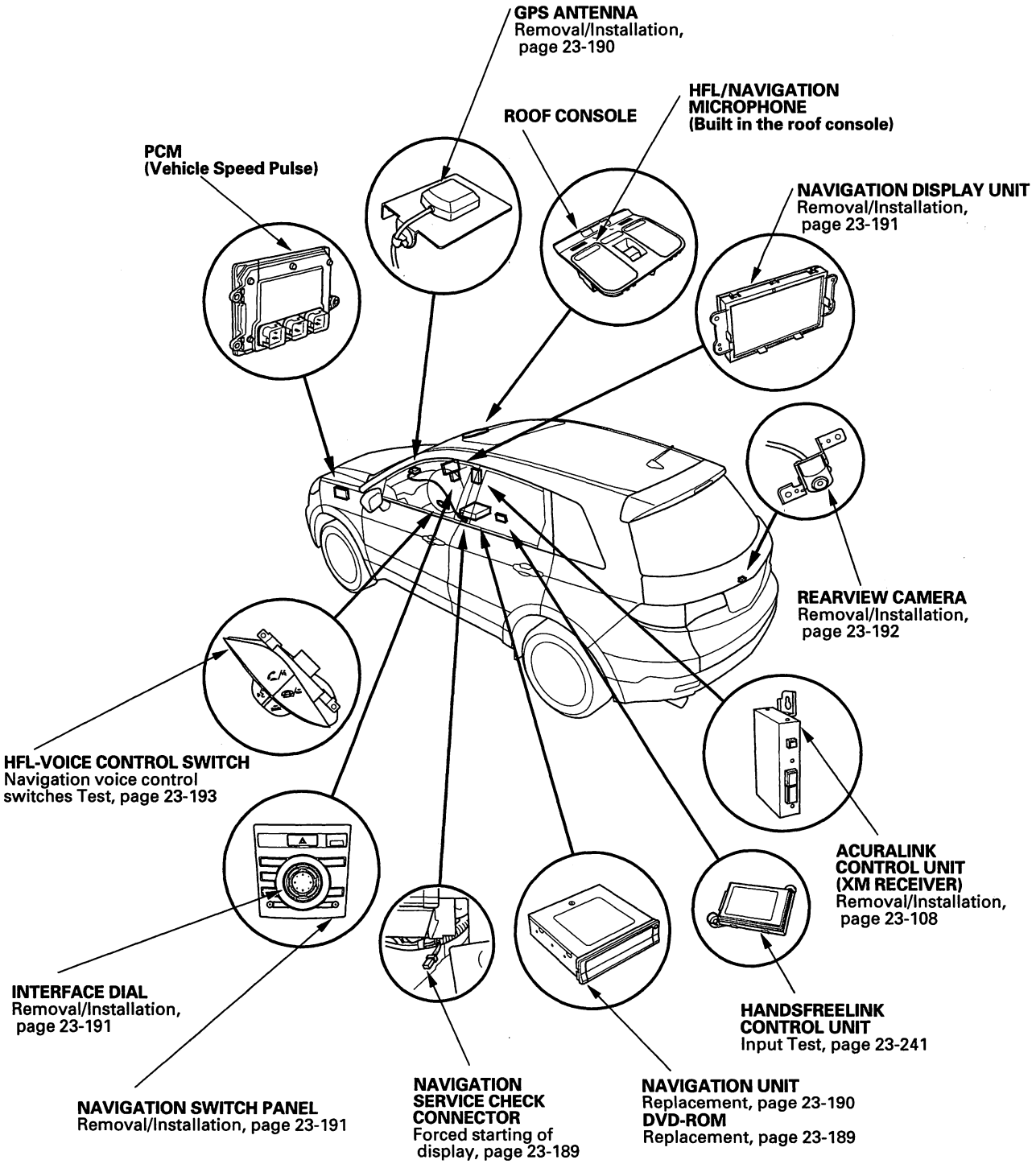

Protected by AR



## General Troubleshooting Information

### General Operation

Refer to the Navigation System Manual for the navigation system operating procedures.

### Anti-theft Feature

The navigation system and audio unit have a coded theft protection circuit. Be sure to get the client's anti-theft security code numbers before;

- Disconnecting the battery.
- Disconnecting the navigation unit 8P connector.
- Removing the No. 23 (10 A) fuse from the under-hood fuse/relay box.

After service, reconnect power to the navigation unit, and turn the ignition switch ON (II). Enter the 4-digit anti-theft security code, then select "Done".

If the code cannot be found, use the Interactive Network (*i*N) to look it up. You can view the serial number in the Navi ECU diagnostic screen (see step 1 on page 23-169). Select Unit Check from the diagnostic screen, then select Navi ECU. Also, you can find the serial number on the navigation unit that is stored in the center console. The serial number is on a label on the bottom of the unit.

When replacing the navigation unit, be sure to give the client the new anti-theft security code.

### Symptom Diagnosis

Certain circumstances and system limitations will result in occasional vehicle positioning errors. Some clients may think this indicates a problem with the navigation system when, in fact, the system is normal. Keep the following items in mind when interviewing clients about symptoms of the navigation system.

### Self-Inertial Navigation Limitations

The limitations of the self-inertial portion of the navigation system (the yaw rate sensor and the vehicle speed signal) can cause some discrepancies between the vehicle's actual position and the indicated vehicle position (GPS vehicle position).

The following circumstances may cause vehicle positioning errors:

- Moving the vehicle with the engine stopped and the vehicle stopped, such as by ferry or tow truck, or if the vehicle is spun on a turn table.
- Tire slippage, changes in tire rolling diameters, and some driving situations may cause discrepancies in travel distances. Examples of this include:
  - Continuous tire slippage on a slippery surface
  - Driving with snow chains mounted
  - Abnormal tire pressure
  - Incorrect tire size
  - Frequent lane changes across a wide highway
  - Continuous driving on a straight or gently curving highway
  - Very bumpy roads
- Tolerances in the system and map inaccuracies sometimes limit how precisely the vehicle position is indicated. Examples of this include:
  - Driving on roads not shown on the map (map matching is not possible)
  - Driving on a road that winds in one direction, such as a loop bridge, an interchange, or a spiral parking garage
  - Driving on a road with a series of sharp hair-pin turns
  - Driving near a gradual highway exit or transition
  - Driving on one of two close parallel roads
  - Making many 90 degree turns

### Global Positioning System (GPS) Limitations

The GPS cannot detect the vehicle's position or elevation during the following instances:

- For the first 5 to 10 minutes after reconnecting the battery (This can take as long as 45 minutes).
- When the satellite signals are blocked by tall buildings, mountains, tunnels, large trees, inside parking structures or large trucks.
- When the GPS antenna is blocked by metallic window tinting or by an object placed above it in the vehicle. The GPS antenna requires a clear unobstructed view of the sky.
- When the satellite signals are blocked by the operation of some electronic aftermarket accessories including, but not limited, to non-OEM in-dash entertainment units (radio, CD players/changers, radar detectors, and theft recovery systems), and cell phones placed near the navigation system.



BACK

Protected by AR

The accuracy of GPS is reduced during these instances:

- Metallic window tinting above the GPS antenna
- When only three or less satellite signals can be received (Four satellite signals are required for accurate positioning).
- When the satellite control centers are experiencing problems.
- When driving near high tension power lines.
- When the satellite signals are blocked by the operation of some electronic aftermarket accessories including, but not limited, to non-OEM in-dash entertainment units (radio, CD players/changers, radar detectors, and theft recovery systems), and cell phones placed near the navigation system.

## Muting Logic

Whenever the navigation system is giving guidance, all of the speakers are muted. When the voice control system is being used, all of the speakers are muted. If the HandsFreeLink is in use, the voice control system is unavailable to the navigation system.

## LCD Display Unit Limitations

NOTE: The screen is not touch sensitive. Use the interface dial and buttons to select items on the screen.

- In cold temperatures, the display may stay dark for the first 2 or 3 minutes until it warms up.
- When the display is too hot because of direct summer sunlight, it will remain dark until the temperature drops (you may see an error message displayed stating this fact).
- When the humidity is high and the interior temperature is low, the display may appear cloudy. The display will clear up after some use.
- Fingerprints on the screen may sometimes be noticeable because of the panel's low-reflection coating. Clean the screen with a soft, damp cloth. You may use a mild cleaner intended for eye glasses or computer screens.

## Symptom Duplication

- When the symptom can be duplicated, verify that it is not a characteristic of the system. Review the navigation manual and compare it to a known-good vehicle (with the same software and database), under the same conditions. If the symptom is not the same as the known-good vehicle, follow the self-diagnostic procedures and the appropriate troubleshooting procedures.
- When the symptom does not reappear or only reappears intermittently, ask the client about the conditions when the symptom occured.
  - Always ask the client to demonstrate the problem.
  - Try to establish possible user error or misunderstanding of the system.
  - Try to establish if outside interference may have been the cause.
  - Try to duplicate the symptom under the same conditions the client experienced.
  - Vibration, temperature extremes, and moisture (dew, humidity) are factors that are difficult to duplicate.
  - Inspect the vehicle for after-market electronic devices (vehicle locators, amps, radar detectors, etc) that may be hidden.

## Service Precautions

- If the navigation unit needs to be replaced, inform the client that personal information in the navigation system will be lost. If possible, have the client record their personal information before the unit is replaced.
- Before disconnecting the battery, make sure you have the anti-theft codes for the audio and the navigation system, write down the audio presets. Also obtain any PGM-FI or transmission DTCs and freeze frame data (which will be lost when the PCM loses power).
- When the battery is disconnected, the internal GPS clock is reset to "0:00". The clock will reset to the correct time after the system finishes GPS initialization.
- After reconnecting the battery, you have to wait to get the initial signal from the satellite. It will take from 10 to 45 minutes.
- Verify map matching.
- Before returning the vehicle, enter the audio and navigation anti-theft security code, then enter the audio presets.
- Adjust the time zone and daylight savings in the set up clock settings found in the navigation system.

(cont'd)

Protected by AR



## General Troubleshooting Information (cont'd)

### System Initialization

If for any reason, you lose power to the navigation system (like the battery was disconnected), the navigation system requires initialization. Once completed, your system is ready to use.

This initialization requires the following:

- Entering the 4-digit anti-theft security code to "unlock" the system
- GPS initialization (may not be needed depending of the length of time the system was without power)
- Map matching to align the GPS to a location on the map.

### Entering Security Code

The navigation system and audio unit have a coded theft protection circuit. Be sure to get the client's anti-theft security codes number before;
- Disconnecting the battery
- Disconnecting the navigation unit 8P connector
- Removing the No. 23 (10 A) fuse from the under-hood fuse/relay box

After service, reconnect power to the navigation unit, and turn the ignition switch ON (II). Enter the 4-digit navigation anti-theft security code, then select "Done".

Enter the 5-digit audio anti-theft security code.

When replacing the navigation unit or audio unit, be sure to give the client the new anti-theft security code(s).

### GPS initialization

NOTE: You must park the vehicle outside with a clear view of the southern sky.

Depending on the length of time the battery was disconnected, your system may require GPS initialization. If it does, the following screen appears:

*****Wait*****
**The system is acquiring its GPS signal. This could take up to 10 minutes.**
**• Engine must be running**
**• Vehicle must be parked outside, away from buildings**
**• Do not move the vehicle at this time**

If this procedure is not necessary. The system proceeds directly to the Disclaimer screen. During initialization, the system searches for all available GPS satellites, and obtains their orbital information. During this procedure, park the vehicle out in the open with a clear view of the southern sky.

If the navigation system finds the satellites properly, this box clears, and changes to the Disclaimer screen. If within 10 minutes the system fails to locate a sufficient number of satellites to locate your position, the following screen appears.

**Navigation system is unable acquire a proper GPS signal.**
**• Move vehicle to another location**
**• Turn the ignition switch off**
**• Disconnect the battery for 30 minutes to clear the GPS receiver's memory**
**• Reconnect the battery and follow the screen prompts**

If this is displayed, turn off the engine, then restart the vehicle and move it to a different location. If you now see the Disclaimer screen, the GPS initialization is complete.

NOTE:
- The average acquiring time is less than 10 minutes, but it can take as long as 45 minutes.
- If the system is still unable to acquire a signal, follow the instructions on the screen. If this screen appears again, go to troubleshooting for the GPS icon is white or not shown (see page 23-156).



BACK

Protected by AR

## Map Matching

This part of the initialization matches the GPS coordinates with a road on the map screen. To perform this part of the procedure, ensure that the navigation system is displaying a map. Check the "GPS" icon in the upper left corner of the screen, it should be "Green" when the vehicle is parked outside, and with the correct color labeled DVD installed in the navigation unit. Drive the vehicle on a mapped road shown on the map screen. Do not enter a destination at this time. When the name of the current road you are driving on, appears at the bottom of the screen, the entire procedure is complete. Your system is now ready to use.

## Obtaining A Navigation DVD

If the navigation DVD is lost or damaged, or you need a yearly updated DVD, you have two ways to purchase one. You can either call (888) 549-3798, or order on-line at www.acura.com "ORDER NAVIGATION DVD" link.

Both methods require a credit card. The DVD for this model has a white label, and cannot be ordered through the parts system. The following DVDs will not work in this navigation system:

- Earlier model navigation DVDs (black or orange label)
- Map software programs manufactured by other companies
- DVD movies, or DVDs containing audio recordings

Update DVDs are available for purchase usually in the fall of each year. They may contain the following:

- Enhanced maps and points of interest (POI) coverage
- Fixes for minor software bugs
- Additional features

NOTE:
- Updating is optional, and there is no program to provide free DVDs containing yearly mapping updates.
- Map matching must be done any time the DVD is removed or replaced.

Protected by AR



## Symptom Troubleshooting Index

| Symptom | Diagnostic procedure | Also check for |
|---|---|---|
| Navigation system stays on the GPS initialization screen | • System Initialization (see page 23-114)<br>• GPS initializing (see page 23-114) | • Navigation unit<br>• GPS antenna/cable is disconnected or damaged<br>• Harness/fuses/switches |
| Vehicle position icon constantly leaves road, moves erratically, or is very far from actual position | Symptom Troubleshooting (see page 23-151) | • Navigation unit<br>• GPS antenna/cable<br>• PCM (speed and fuel pulses)<br>• Harness/fuses/switches |
| System always comes up in in-line diagnostic mode | Symptom Troubleshooting (see page 23-169) | |
| Navigation system will not accept security code | Symptom Troubleshooting (see page 23-162) | Wrong color DVD |
| Navigation frequently asks for anti-theft code and needs GPS initialization | Symptom Troubleshooting (see page 23-166) | • Navigation unit<br>• Low battery voltage<br>• Harness/fuses/switches |
| GPS icon is white or not shown | Symptom Troubleshooting (see page 23-156) | • Navigation unit<br>• Aftermarket accessories connected to the system<br>• GPS antenna/cable<br>• Harness/fuses/switches |
| Vehicle icon wanders across the map when driving (does not follow a displayed road) or map or vehicle ICON spins | Symptom Troubleshooting (see page 23-161) | • Navigation unit<br>• GPS antenna/cable<br>• PCM (Speed signal) |
| No picture is displayed | Symptom Troubleshooting (see page 23-150) | • Navigation unit<br>• Display unit<br>• Harness/fuses/switches |
| Picture has lines/rolls/other issues or is an odd color | Symptom Troubleshooting (see page 23-153) | • Navigation unit<br>• Aftermarket accessories connected to the system<br>• Display unit<br>• Harness/fuses/switches |
| Picture is missing a color or tone or is an odd color | Symptom Troubleshooting (see page 23-152) | • Navigation unit<br>• Wrong color DVD installed<br>• Display unit<br>• Aftermarket accessories connected to the system<br>• Harness/fuses/switches |
| Traffic information is not being shown on map screen | Symptom Troubleshooting (see page 23-167) | • AcuraLink (XM)<br>• Navigation unit<br>• Harness<br>• Customer account status<br>• Area outage<br>• Area not covered |



BACK

Protected by AR

| Symptom | Diagnostic procedure | Also check for |
|---|---|---|
| Display day/night mode does not work | Symptom Troubleshooting (see page 23-160) | • Display unit<br>• Gauge control module (CAN)<br>• Display brightness set to "High"<br>• Harness/fuses/switches |
| System locks up or freezes constantly | Symptom Troubleshooting (see page 23-161) | • Navigation unit<br>• Wrong color DVD installed<br>• Harness/fuses/switches<br>• Damaged DVD |
| Voice guidance cannot be heard, is broken up, or there is too much static | Symptom Troubleshooting (see page 23-156) | • Navigation unit<br>• Volume or voice feedback setting (see Owner's Manual)<br>• Audio unit/amplifier<br>• Harness/fuses/switches |
| Voice control does not work/ respond | Symptom Troubleshooting (see page 23-158) | • Navigation unit<br>• Microphone/voice control switch<br>• Volume or voice feedback setting (see Owner's Manual)<br>• Harness/fuses/switches |
| Navigation cannot control A/C by voice | Symptom Troubleshooting (see page 23-160) | • Display unit<br>• Wrong color DVD installed<br>• Harness/fuses/switches<br>• Wrong navigation unit (model code) |
| Navigation cannot control XM radio | Symptom Troubleshooting (see page 23-166) | |
| Navigation cannot control audio/ disc | Symptom Troubleshooting (see page 23-163) | Wrong color DVD |
| Interface dial buttons do not work | Symptom Troubleshooting (see page 23-154) | • Navigation unit<br>• Display unit<br>• Interface dial<br>• Harness/fuses/switches |
| Today's Destinations button is dim and not selectable in the Enter destination by screen (grayed-out) | The client has not entered a group of locations for Today's Destinations. This is normal. The button is only selectable if the client is using this function. | See Owner's Manual |
| Some set-up and information functions of the navigation system are grayed-out and do not work | | Client did not select "OK" from Disclaimer screen. Refer to System Function Diagram (see page 23-131). |

(cont'd)

Protected by AR



## Symptom Troubleshooting Index (cont'd)

| Symptom | Diagnostic procedure | Also check for |
|---|---|---|
| Previous Destinations button is dim and not selectable in the Enter destination by screen (grayed-out) | The vehicle may be new, or the client deleted the destination. Enter a destination, and allow the system to route to it. After the trip, the Previous Destinations button will be selectable. | |
| Address cannot be found or system gives poor routing | Verify proper operation and system limitations using the owner's manual | • Database limitations (address not in database)<br>• Wrong color DVD installed |
| Rearview camera does not come on or work properly | Symptom Troubleshooting (see page 23-164). | • Software for the latest up-dates<br>• No backup signal<br>• Wrong disc installed in navigation unit |
| The map will not display the Southern portion of the U.S. or the Northern parts of Canada | North American coverage is different for U.S. /Canada markets. See the "Version" Diagnostic Screen (see page 23-186) for details on coverage differences. | See Owner's Manual |
| Navigation stays on with ignition switch off | Symptom Troubleshooting (see page 23-163) | • Harnnes/fuses/switchs<br>• Aftermarket accessories connected to the system |
| DVD screen error messages | Symptom Troubleshooting (see page 23-159) | • Navigation unit<br>• Wrong color DVD installed<br>• Display unit<br>• Damaged DVD |
| Navigation system will not go beyond the disclaimer screen and displays the OK button | | • Wrong color DVD installed<br>• Scratched or damaged DVD<br>• Navigation unit |
| The navigation anti-theft code card is lost or missing | See anti-theft feature (see page 23-112) | |
| The vehicle icon lags behind when the vehicle turns | See self-inertial navigation limitations (see page 23-112) | • Aftermarket accessories connected to the system<br>• GPS antenna/cable |
| Navigation screen is darker than normal or takes time to start up when it is cold | See LCD display unit limitations (see page 23-113) | |
| The navigation clock is off by 1 to 3 hours after replacing the navigation unit | See service precautions (see page 23-113) | • Perform map matching (see page 23-115)<br>• GPS antenna/cable<br>• Check and adjust the clock settings |
| A new navigation DVD is needed | See obtaining a navigation DVD (see page 23-115) | |



BACK

Protected by AR

# System Description

## Overview

The navigation system is a highly-sophisticated, hybrid locating system that uses satellites and a map database to show you where you are and to help guide you to a desired destination.

The navigation system receives signals from the global positioning system (GPS), a network of 24 satellites in orbit around the earth. By receiving signals from several of these satellites, the navigation system can determine the latitude, longitude, and elevation of the vehicle. In addition, signals from the system's yaw rate sensor and the PCM (vehicle speed pulse) enable the system to keep track of the vehicle's direction and speed of travel.

This hybrid system has advantages over a system that is either entirely self-contained or one that relies totally on the GPS. For example, the self-contained portion of the system can keep track of vehicle position even when satellite signals cannot be received. When the navigation system is on, the GPS can keep track of the vehicle position even when the vehicle is transported by ferry.

The navigation system applies all location, direction, and speed information to maps and calculates a route to the destination entered. As you drive to that destination, the system provides both visual and audio guidance.

This navigation system also has voice recognition that allows voice control of most of the navigation functions. The Navigation TALK and BACK buttons on the steering wheel activate the voice control. The voice control also allows control of the audio and climate functions.

The illumination signal (headlights ON) is used by the navigation unit to automatically switch the display between "Night" and "Day" brightness modes when display is set to Auto. When the instrument panel brightness control is set to full brightness (hold both "+" and "—" key at the same time), the navigation system stays in the day mode, even with the headlights on.

The GA-NET II communication bus passes information back and forth between the display panel control unit, the navigation unit and the audio system, The information passed on this bus are audio and climate control settings directed by the navigation unit.

The "Comm. Bus" connects the HFL, XM (HIP) (AcuraLink), and navigation units. This bus supports these functions:

- The navigation control unit receives traffic and AcuraLink message information from the AcuraLink Control unit.
- The navigation control unit sends a POI phone number (on the "Calculate route to" screen) to the HandsFreeLink control unit for dialing.
- If vehicle problems are detected, and the client's cellular contract includes data service, then the AcuraLink control unit can send vehicle data to the HandsFreeLink control unit for transmitting back to the AcuraLink servers.
- The AcuraLink server can pass additional problem details back through the HandsFreeLink control unit, to the AcuraLink Control unit, and finally to the navigation unit for display.

(cont'd)

Protected by AR



## System Description (cont'd)

### System Diagram

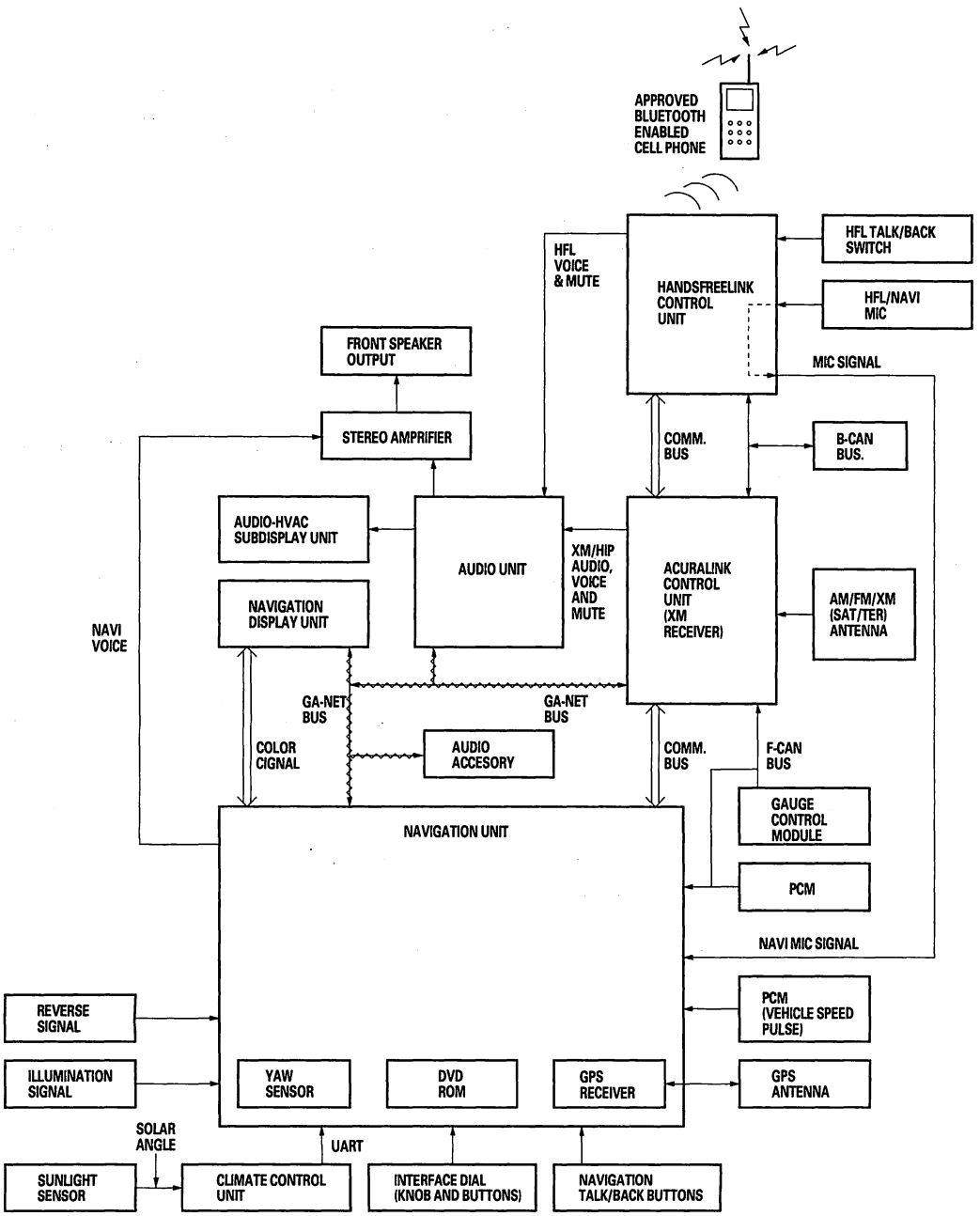




BACK

Protected by AR

## Navigation Function

The navigation system is composed of the navigation unit, the PCM (vehicle speed signal), the GPS antenna, the microphone, the voice control switch, the audio unit, the display unit, and the interface dial.

### Function Diagram

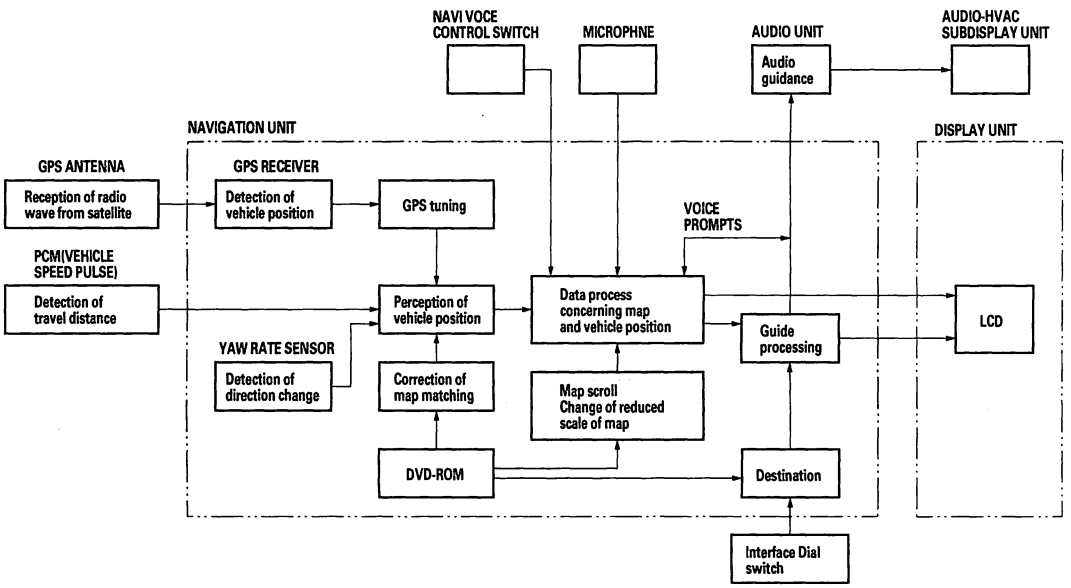


### GA-Net Bus Configration

The GA-Net bus passes audio and navigation commands throughout the navigation and audio components. These commands include navigation audio/XM selections by voice, and XM station and music title names. Because the entire bus is interconnected between components, an open or short in the GA-Net bus harness may cause any or all of these functions to become inoperative.

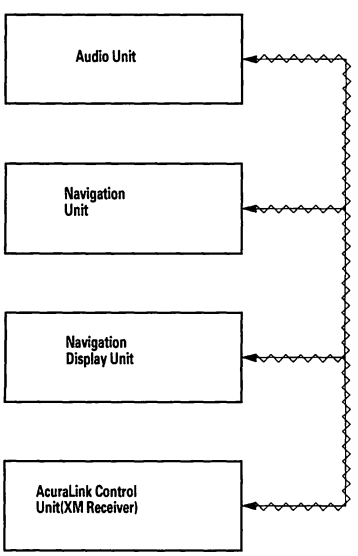


(cont'd)

Protected by AR



## System Description (cont'd)

**Vehicle Speed Pulse**
The vehicle speed pulse is sent by the PCM. The PCM receives a signal from the countershaft speed sensor, then processes the signal and transmits it to the speedometer and other systems.

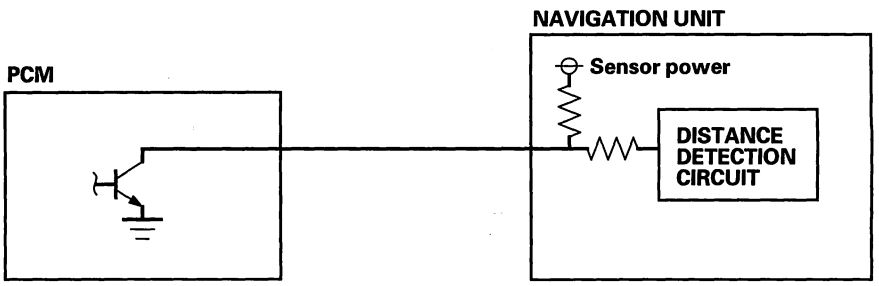


**Charge Signal and Navigation Unit Cooling Fan Operation**
The PCM sends a charge signal to the navigation unit via F-CAN. A thermister inside the navigation unit monitors the units internal temperature. This information combined with a charge signal determines the control units internal cooling fan operation.

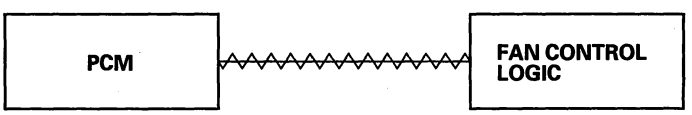




BACK

Protected by AR

**Yaw Rate-Lateral Acceleration Sensor**
The yaw rate-lateral acceleration sensor (located in the navigation unit) detects the direction change (angular speed) of the vehicle. The sensor is an oscillation gyro built into the navigation unit.

**Sensor Element Structure**
The sensor element is shaped like a tuning fork, and it consists of the piezoelectric parts, the metal block, and the support pin. There are four piezoelectric parts: one to drive the oscillators, one to monitor and maintain the oscillation at a regular frequency, and two to detect angular velocity. The two oscillators, which have a 90-degree twist in the center, are connected at the bottom by the metal block and supported by the support pin. A detection piezoelectric part is attached to the top of each oscillator. The driving piezoelectric part is attached to the bottom of one oscillator, and the monitoring piezoelectric part is attached to the bottom of the other oscillator.

**Oscillation Gyro Principles**
The piezoelectric parts have "electric/mechanical transfer characteristics. " They bend vertically when voltage is applied to both sides of the parts, and voltage is generated between both sides of the piezoelectric parts when they are bent by an external force. The oscillation gyro functions by utilizing this characteristic of the piezoelectric parts and "Coriolis force. " (Coriolis force deflects moving objects as a result of the earth's rotation.) In the oscillation gyro, this force moves the sensor element when angular velocity is applied.

**Operation**
1. The driving piezoelectric part oscillates the oscillator by repeatedly bending and returning when an AC voltage of 6 kHz is applied to the part. The monitoring-side oscillator resonates because it is connected to the driving-side oscillator by the metal block.
2. The monitoring piezoelectric part bends in proportion to the oscillation and outputs voltage (the monitor signal). The navigation unit control circuit controls the drive signal to stabilize the monitor signal.
3. When the vehicle is stopped, the detecting piezoelectric parts oscillate right and left with the oscillators, but no signal is output because the parts are not bent (no angular force).
4. When the vehicle turns to the right, the sensor element moves in a circular motion with the right oscillator bending forward and the left oscillator bending rearward. The amount of forward/rearward bend varies according to the angular velocity of the vehicle.
5. The detecting piezoelectric parts output voltage (the yaw rate signal) according to the amount of bend. The amount of vehicle direction change is determined by measuring this voltage.

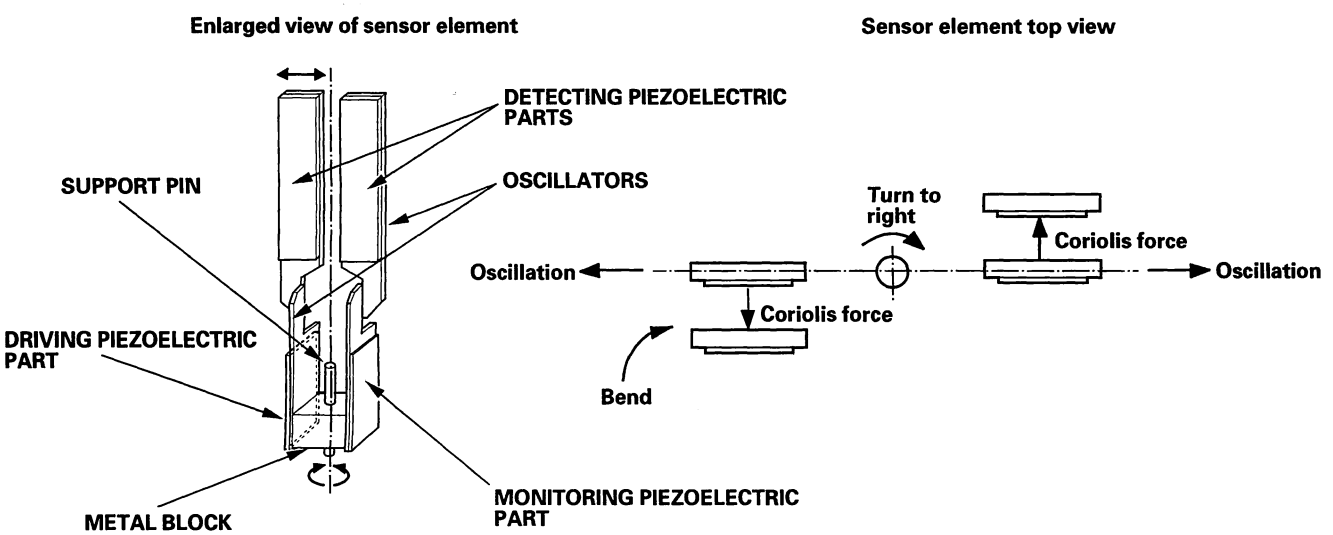


(cont'd)

Protected by AR

# Navigation System

## System Description (cont'd)

**Global Positioning System (GPS)**
The global positioning system (GPS) enables the navigation system to determine the current position of the vehicle by using the signals transmitted from the satellites in orbit around the earth. The satellites transmit the satellite identification signal, orbit information, transmission time signal, and other information. When the GPS receiver receives a signal from four or more satellites simultaneously, it calculates the current position of the vehicle based on the distance to each satellite and the satellite's position in its respective orbit.

**Position detection Image with GPS satellite**

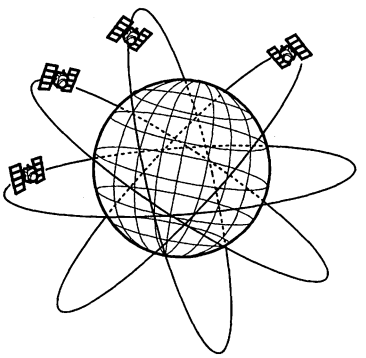

NOTE: Four satellites on each of 6 orbits.

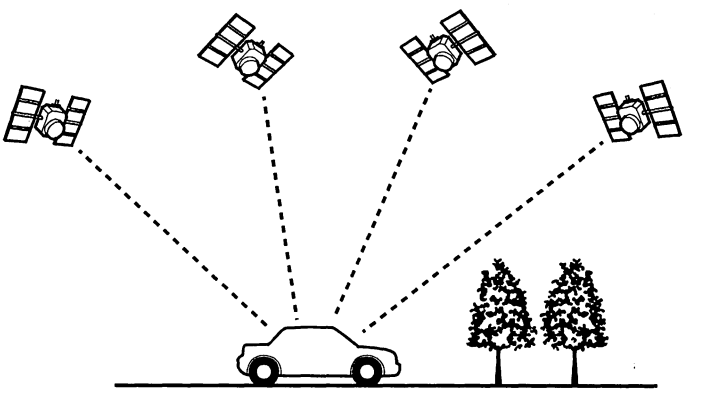

**Precision of GPS**
The precision of the GPS varies according to the number of satellites from which signals are received and the view of the sky. The precision is indicated by the color and shape of the GPS icon shown on the display.

| GPS ICON | NUMBER OF SATELLITES | CONDITION | DESCRIPTION |
|---|---|---|---|
| No GPS icon shown | 2 or less | Impossible to detect vehicle position | GPS function is normal. The satellite signals received by the GPS are too few to detect the vehicle position. |
| Square GPS icon shown with white "GPS" | 3 | Vehicle position detectable in 2 dimensions | The longitude and latitude of the vehicle position can be detected. (Less precise than detection in three dimensions) |
| Cube GPS icon shown with green "GPS" | 4 or more | Vehicle position detectable in 3 dimensions | The longitude, latitude and the altitude of the vehicle position can be detected. (More precise than detection in two dimensions) |

**GPS Antenna and clock**
The GPS antenna amplifies and transmits the signals received from the satellites to the GPS receiver.

**GPS Receiver**
The GPS receiver is built into the navigation unit. It calculates the vehicle position by receiving the signal from the GPS antenna. The current time vehicle position and signal reception condition is transmitted from the GPS receiver to the navigation control unit to adjust vehicle position.



BACK

Protected by AR

**Navigation Unit**
The navigation unit calculates the vehicle position and guides you to the destination. The unit performs map matching correction, GPS correction, and distance tuning. It also controls the menu functions and the DVD-ROM drive, and interprets voice commands. With control of all these items, the navigation unit makes the navigation picture signal, then it transmits the signal to the display panel control unit and audio driving instructions to the audio unit.

**Calculation of Vehicle Position**
The navigation unit calculates the vehicle position (the driving direction and the current position) by receiving the directional change signals from the yaw rate sensor and the travel distance signals from vehicle speed pulse (VSP) signal of the PCM.

**Map Matching Tuning**
The map matching occurs when you drive the vehicle along a mapped road until the road name appears of the bottom of the screen. The map data transmitted from the DVD-ROM is checked against the vehicle position data, and the vehicle position is indicated on the nearest road. Map matching tuning does not occur when the vehicle travels on a road not shown on the map, or when the vehicle position is far away from a road on the map.

**GPS Tuning**
The GPS tuning is accomplished by indicating the vehicle position as the GPS's vehicle position. The navigation unit compares its calculated vehicle position data with the GPS vehicle position data. If there is large difference between the two, the indicated vehicle position is adjusted to the GPS vehicle position.

**Distance Tuning**
The distance tuning reduces the difference between the travel distance signal from the VSP and the distance data on the map. The navigation unit compares its calculated vehicle position data with the GPS vehicle position data. The navigation unit then decreases the tuning value when the vehicle position is always ahead of the GPS vehicle position, and it increases the tuning value when the vehicle position is always behind the GPS vehicle position.

**Route Guidance**
The navigation unit can calculate different routes to a selected destination. You have five options:
- Direct Route-Calculate a route that is the most direct.
- Easy Route calculate a route that minimizes the number of turns needed.
- Minimize Freeways-Calculate a route that avoids freeway travel. If that is not possible, keep the amount of freeway travel to a minimum.
- Minimize Toll Roads-Calculate a route that avoids, or minimizes travel on toll roads.
- Maximize Freeways-Calculate a route that uses freeways as much as possible.

**Audio Guidance**
The navigation unit transmits audio driving instructions before entering an intersection or passing a junction. The audio instructions come through the audio unit to the front speakers.

NOTE: The front speakers are muted whenever the navigation system is giving guidance commands, and all of the speakers when the voice control system is being used.

**Solar Angle**
The navigation system uses the sun's angle, along with the sunlight sensor to control the driver/passenger A/C air flow.

**Off Road Tracking (breadcrumbs)**
Off road tracking dots that can be followed on the map retrace your route back to a mapped (digitized) road.

**Clock and Time Zone**
The clock set up allows you to set daylight savings time, auto time zone and time adjustment.

(cont'd)

Protected by AR



## System Description (cont'd)

**Muting Signal Logic**
The audio muting logic is orchestrated by the audio unit. The audio unit determines what audio source has priority to use the speakers.

The priority of the audio sources is as follows:

HFL has the highest priority, followed by AcuraLink, navigation, and finally the radio/CD-DVD player. The priority is passed by HFL, and AcuraLink to the audio unit by dedicated mute wires. The navigation mute signal is passed to the stereo amplifier.

The navigation unit temporarily disables the voice control buttons, but allows guidance to be heard. In addition, the audio unit suppresses the output from the audio unit, XM receiver, disc player, or other audio accessories.

When the navigation system sends out a voice route guidance command, the audio front center speaker is muted, and the navigation voice is heard in the front speakers.

When the navigation voice control system is in use, all of the speakers are muted, and the navigation voice prompts are heard from the front speakers.

**DVD-ROM**
The DVD includes:
- Map Data
- Point of interest (POI)
- Navigation software

**Audio Unit**
The audio unit receives the voice guidance instructions from the navigation unit, and transmits the instructions through the front speakers even when the audio system is in use.

NOTE: If the navigation volume is turned OFF, this feature is disabled.

**Display Unit**
The display unit uses a liquid crystal display (LCD). The LCD is a 8-inch-diagonal, thin film transistor (TFT), stripe type with 336,960 picture elements. The color film and fluorescent light are laid out on the back of the liquid crystal film.

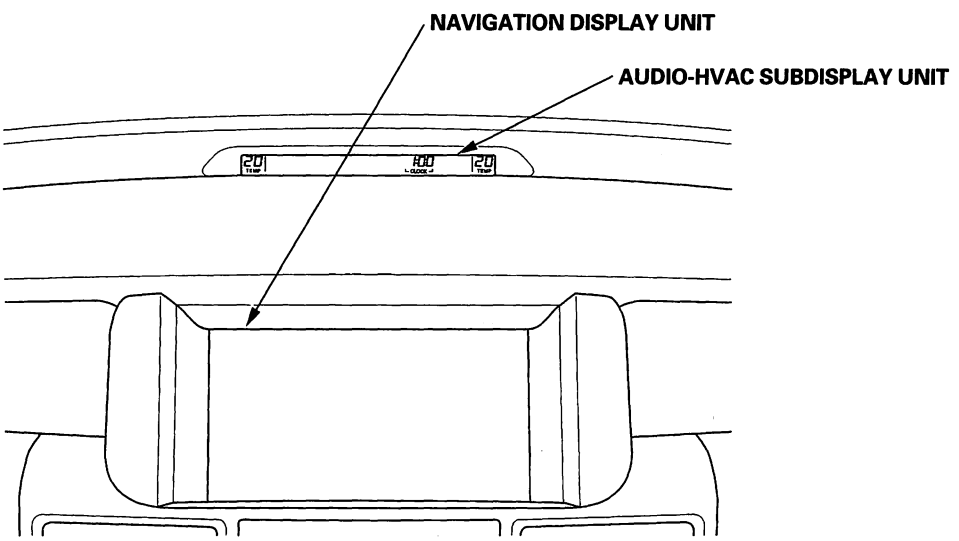




BACK

Protected by AR

**Microphone (Mic)**
Receives voice commands and transmits them to the navigation unit or HandsFreeLink control unit for interpretation. Both system share the same microphone.

**TALK Button**
Activates the voice control system in the navigation unit to accept voice commands.

**BACK Button**
Returns the display to the previous screen (similar function as the CANCEL button).

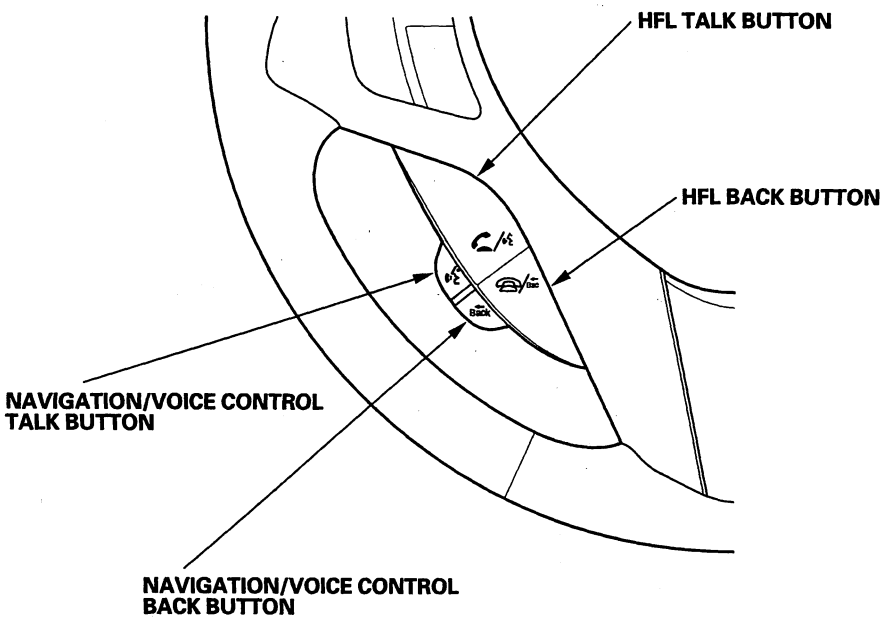


(cont'd)

Protected by AR



## System Description (cont'd)

**Glossary**
The following is a glossary of terms pertaining to the Voice Recognition Navigation System.

| Item | Definition |
|---|---|
| AcuraLink | This device receives information from the XM satellites and passes XM audio information to the audio unit. In addition, traffic information is sent to the navigation unit. |
| B-CAN | Body CAN Bus (see CAN) |
| Breadcrumbs (White dots) | Off road tracking dots that can be followed on the map to retrace your route back to a mapped (digitized) road. This function can be turned on/off in Setup screen 1. |
| CAN | Controller Area Network. This communication network allows processors in the vehicle to send/receive information. The fuel pulses used by the MID trip computer are received from the PCM using the F-CAN (Fast Controller Area Network) bus. |
| CPU | Central Processing Unit. The main device within the navigation unit that coordinates the rest of the electronic functions. |
| CSS | Countershaft (Output) Speed Sensor. This sensor reads the output shaft speed at the transmission and provides a speed pulse to the PCM. |
| Database | This consists of the Map data, and the POI (Points Of Interest) data stored on the DVD. |
| DBW | Drive By Wire. Allows electrical control of the throttle without the need of a mechanical linkage. |
| DCA | Detailed Coverage Area. Main metropolitan areas in the Lower 48 states, and Canada are mapped to this level. See the Navigation Owner's manual for a list of these areas. |
| DTC | Diagnostic Trouble Codes. Use the PGM Tester, or HDS tablet to obtain, and troubleshoot the cause of these codes. |
| Dead Reckoning | The use of the speed signal, and yaw rate sensor to position the vehicle on the map even when tall buildings, or driving in a tunnel obscures the GPS signal. |
| Digitized Road | A road that appears on the navigation screen. The road name will appear at the bottom of the navigation screen. If the user drives "off road" the navigation system will display "Not on a digitized road", and after 1/2 mile, the "breadcrumbs" will appear. |
| Disclaimer Screen | Screen containing cautionary information. It is meant to be read carefully, and acknowledged by the customer when using the navigation system. |
| DVD or DVD-ROM | Digital Versatile Disk. The navigation program and database resides on this disk. See the Navigation Owner's Manual for information on how to order a replacement or an update DVD. |
| ECM | Engine Control Module. Typically referred to as the ECM. |
| FAQ | Frequency Asked Questions. See the Navigation Owner's Manual for a list of the customer FAQs, and troubleshooting information. |
| F-CAN | Fast CAN Bus (see CAN) |
| GPS | Global Positioning System. A network of 24 satellites in orbit around the earth. The navigation system can simultaneously receive signals from up to 12 satellites to accurately position the vehicle on the map. |



BACK

Protected by AR

| Item | Definition |
|---|---|
| HDS | Honda Diagnostic System. A hand held tablet PC used for in diagnosing vehicle problems. This device can be used to obtain DTC codes for diagnosis of the navigation system and CAN related problems. |
| HFL | HandsFreeLink uses Bluetooth technology as a wireless link between it and an approved Bluetooth compatible cell phone. See the vehicle Owner's manual or Quick Start Guide for more information. |
| HIP (AcuraLink) | Honda Information Platform (see AcuraLink) |
| H/U | Head Unit. The navigation system display assembly in the dash. |
| Initialization | This refers to the period needed to re-acquire the GPS satellite orbital information whenever the navigation system power has been disconnected. This can take from 10 to 45 minutes. |
| Interface Dial | This control device consists of a rotating knob and the buttons surrounding it. This device allows control of the navigation, audio, and climate functions displayed on the screen. |
| LCD | Liquid Crystal Display (the navigation screen) |
| Map Matching | The received GPS information allows the navigation system to position the vehicle on the map. Map matching has occurred if the map screen is displaying the current street name in the bottom-shaded area. |
| Mic | Abbreviation for the microphone used for receiving voice commands. It is located near the map light in the ceiling. |
| MID | Multi-Information Display |
| MW | Maneuver Window. While on-route to a destination, this window displays information about the next maneuver. |
| Navi | Abbreviation for the Navigation System. |
| Off-Road Tracking | See "Breadcrumbs" |
| Off Route | This occurs when the user leaves mapped roads. Off road tracking dots ("breadcrumbs") are displayed if the option is enabled in the setup menu. The user can use them to return to a mapped road. The bottom of the navigation screen will say "Not on a digitized road" |
| Outlying Areas | These are rural areas that typically have only their main roads mapped. All other roads are shown in light brown for reference only, since they have not been verified. |
| Paired | Linking your cell phone to the HFL |
| PC Card Slot | The PC Card (PCMCIA, type II) slot is for factory use only. Make sure that the sliding door is closed at all items, if opened, an error message is displayed on the screen. |
| PCM | Powertrain Control Module. This unit supplies the navigation system speed signal, and charge signal via the F-CAN network. Also refered to as ECM. |
| PCMCIA | A computer industry defined term referring to the PC Card slot standard. |

(cont'd)

Protected by AR



## System Description (cont'd)

| Item | Definition |
|---|---|
| PIN | Personal Identification Number, a random 4 digit number created by the customer to protect personal information. |
| POI | Point Of Interest. These are the businesses, schools, etc. found under the "places" option on the main menu. |
| Polygon | Colored areas on the map screen denoting parks, schools, etc. See the Navigation System Manual "Driving to Your Destination" for a list of the assigned colors. |
| QWERTY | Keyboard layout resembling the typewriter keys. The keyboard layout can be changed to an alphabetical layout in the Setup mode. |
| SCS connector | The "service check signal" 2-pin connector used to put the navigation system into the diagnostic mode. |
| Security Code | Code needed to activate the navigation system. You can get the security code from the "*i*N" by entering the navigation unit serial number. You can find the serial number on the diagnostic screens (Unit Check, Navi ECU) or on the underside of the navigation unit. |
| Tuning | A continual update of internal navigation system scaling factors. See the individual sensor tuning discussions under either "System Description", or "System Diagnosis Mode" (see page 23-169) in this manual. |
| Unverified Streets | These streets have not been verified for turn restrictions, one-way, etc. They are shown in light brown on the map. You can enter address destinations in these areas, but depending on your "Unverified Routing" choice in setup, voice guidance may end at the last verified street closest to your destination. |
| Verified Streets | These streets consist of the detailed metropolitan coverage areas, and all other inter-town connection roads. These roads are shown in black on the map. |
| VP | Vehicle Position. When in map mode, this circular icon shows the vehicle position on the map. Touch this icon to show the latitude, longitude, and elevation of your current position. |
| VR | Voice Recognition. This allows voice control of many of the navigation functions. The hardware consists of the microphone, voice control switch (Talk/ Back buttons), and the front speakers. See the overview for more information. |
| VSP | Vehicle Speed Pulse. This pulse signal coming from the PCM (via the CSS) is used to update the Vehicle position on the map. These pulses do not indicate direction (forward or backward). When in reverse, the navigation receives a signal and directs the VP to move backwards on the map. |
| XM | This device receives information from the XM satellites and passes XM audio information to the audio unit. In addition, traffic information is sent to the navigation unit (see AcuraLink). |
| Yaw Sensor | This device is located in the navigation system control unit and senses the side-to-side twisting force generated when the vehicle turns. See a detailed description of how this sensor works in this manual. |



BACK

Protected by AR

**System Function Diagram**
This diagram shows the features of the navigation system starting at the center and working outward in layers. The navigation program starts at "Key ON", and then displays the globe screen. Once the disclaimer screen is acknowledged, the next shaded portions of the diagram become active. However, some functions of the INFO and SET UP buttons, and all functions of the AUDIO and A/C buttons can be accessed immediately after the globe screen (white).

The items above the map screen show various ways to set a destination, such as "Go Home." Once you begin driving to your destination, you are provided with map/voice guidance, routing cautions (in unverified areas), and a directions list. While driving to your destination, use the voice control system as much as possible to interact with the navigation, audio, and climate control systems.

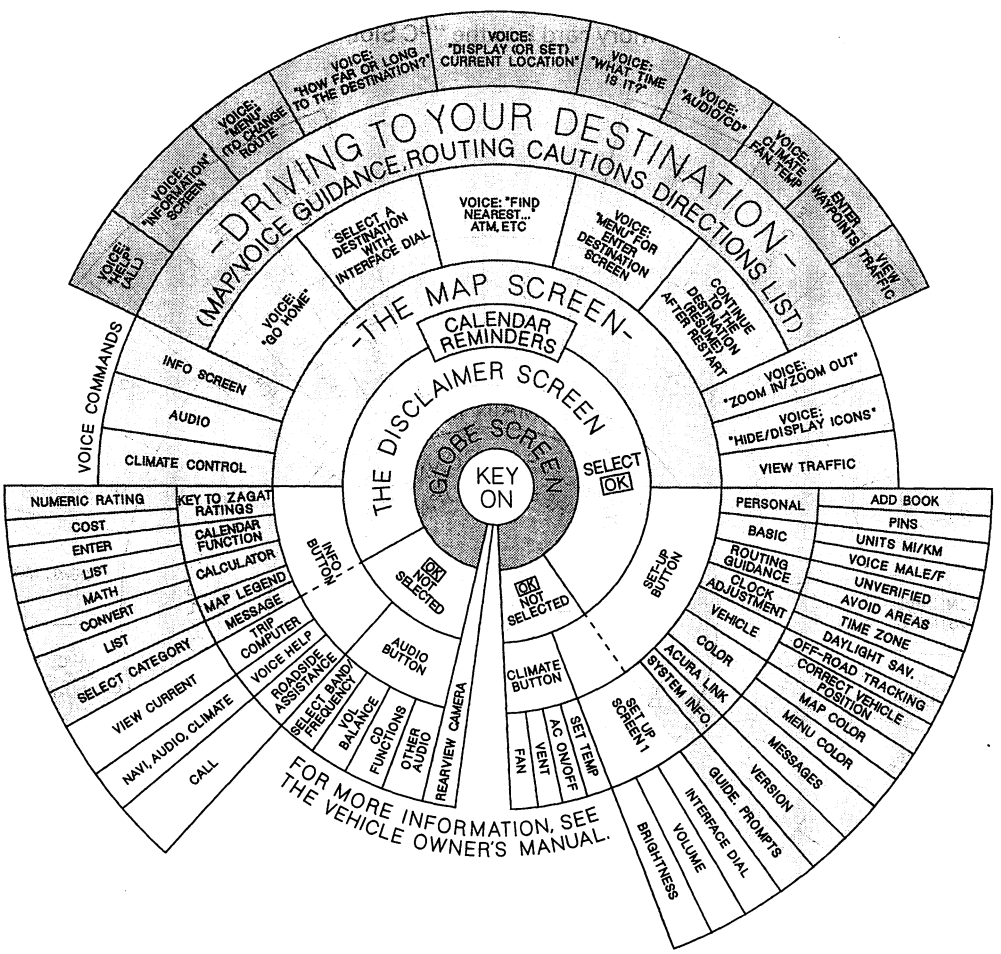


- ☐ **Functions accessible at any time**
- ☐ **Disclaimer screen**
- ☐ **Map screen/voice commands to enter a destination**
- ☐ **Driving to your destination**
- ☐ **Voice commands while driving to your destination**
- ■ **Globe screen**

(cont'd)

Protected by AR



## System Description (cont'd)

**Diagnostic System Diagram**
This diagram represents the diagnostic "slice" in the Navigation Functional diagram. The diagram shows an overview of the navigation diagnostic features starting at the center and working outward in layers. The diagram starts with "Key on". The diagram shows two ways to get to the diagnostic main menu:

- By starting the vehicle with the SCS service connector plugged in, you will enter the diagnostic "System Links" screen. select "Return" to get to the main diagnostic menu.
- From any of the navigation Map or Menu screens, press and simultaneously hold the keys Menu + Map + Cancel.

The diagram shows the available diagnostic menu choices, starting at the bottom left, and moving clockwise. In most cases, do not clear or change settings in any diagnostic screen unless instructed to do so in the explanation, or by the factory.

If the factory asks you to insert a PCMCIA memory card into the "PC Slot," then the features specified on the diagram as "(Card)" are available.

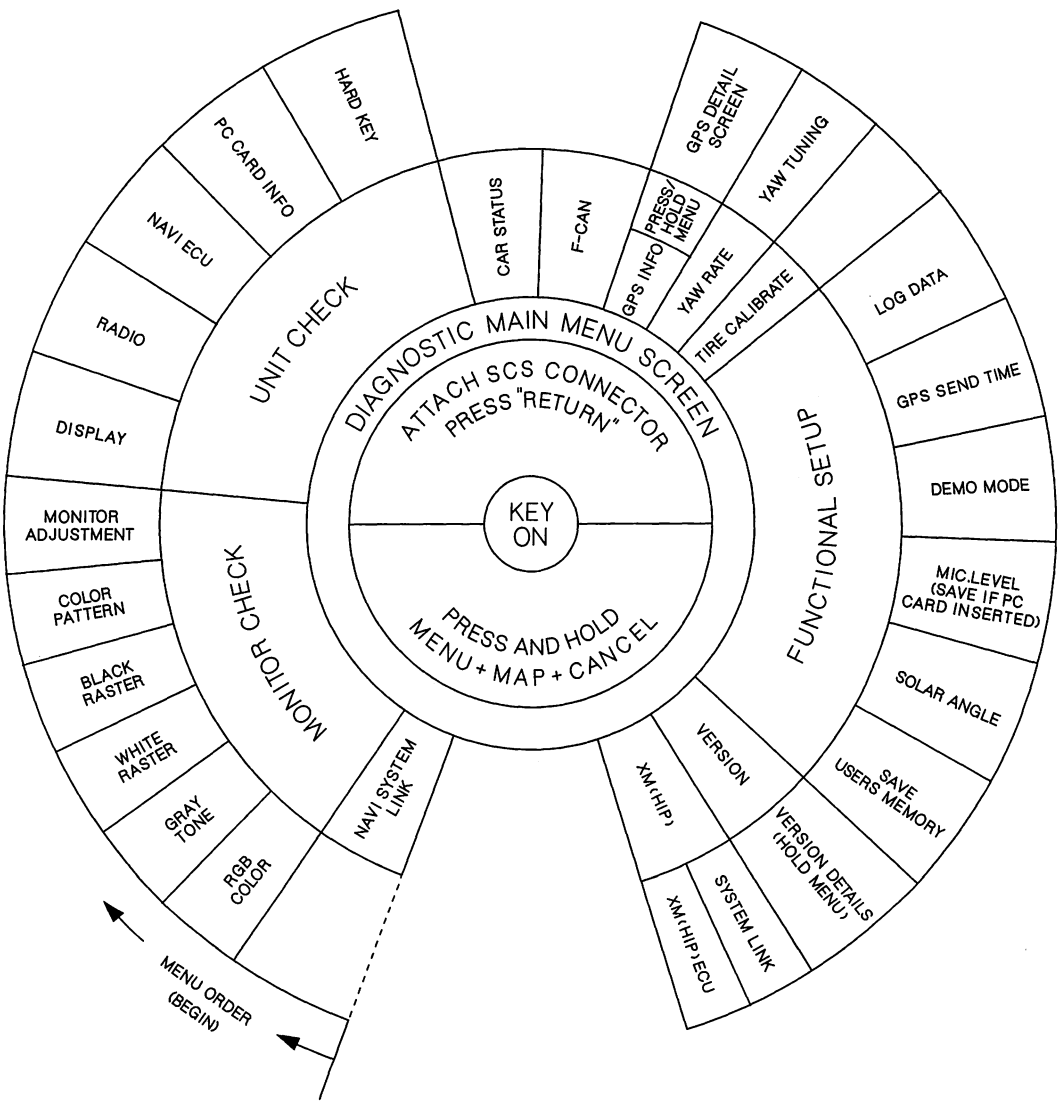




BACK

Protected by AR

## Navigation Unit Inputs and Outputs for Connector A (20P)

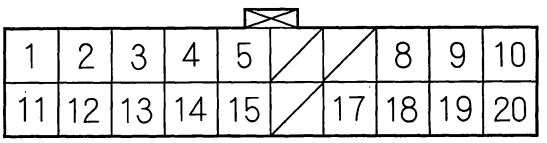


Wire side of female terminals

| Terminal Number | Wire Color | Terminal Name | Description | Voltage (about) | Symptom |
|---|---|---|---|---|---|
| 1 | WHT | R SIG (Red signal) | Red color signal | 0—1 V | If open: Red color missing (see "RGB Color" diagnostic).<br>If short to ground: Red color missing (see "RGB Color" diagnostic). |
| 2 | RED | G SIG (Green signal) | Green color signal | 0—1 V | If open: Green color missing (see "RGB Color" diagnostic).<br>If short to ground: Green color missing (see "RGB Color" diagnostic). |
| 3 | GRY | SH SIG (Shield signal) | Shield for terminal No. 1, 2, 11, 12, 13 | 0 V | If open: No change to display.<br>If short to ground: No change to display. |
| 4 | YEL | A/C-SI (Air conditioner serial in) | Communication signal for climate control unit | —— | HVAC will not respond to navigation commands. |
| 5 | GRY | ILL (+) (Illumination positive) | Parking light on signal | Lights on: battery voltage, Lights off: 0 V | If open: When brightness = "Auto," night mode for the display is inoperative when lights on.<br>If short to ground: Blows No. 14 (7.5 A) fuse in under-dash fuse/relay box. |
| 8 | WHT | CAN-H (CAN high) | F-CAN bus communication | Pulses 2.5—6 V average 3 V | If open:<br>1) System Links FI-ECU, and Meter both show "NG."<br>2) F-CAN diagnostic = "NG."<br>3) B-CAN diagnostic = "NG."<br>4) Car status CHG (CAN) = 0.<br>5) Functional Setup, Trip info, FUP & Sampled FL = 0.<br>If short to ground: Same diagnostic conditions as when open, and also sets the following DTCs.<br>• B1168 Gauge Control Module loss of Comm. (Engine)<br>• B1169 Gauge Control Module loss of Comm. (A/T)<br>• B1178 F-CAN communication Circuit error.<br>• U0073 (F-CAN bus off)<br>• U0155 (F-CAN Gauge control module)<br>• U0121 (F-CAN VSA control) |
| 9 | GRY | SH ECU BUS (GA-NET) (Shield display bus) | Shield for display bus terminal No. 10, 20 | 0 V | If open: No change to display.<br>If short to ground: No change to display. |
| 10 | GRN | ECU BUS (+) (GA-NET) (Display bus positive) | Data bus (+) GA-Net | 0—5 V pulses average 2.5 V depends on bus traffic | If open: Navigation buttons do not work.<br>If short to ground: Navigation buttons do not work. |

(cont'd)

Protected by AR



## System Description (cont'd)

| Terminal Number | Wire Color | Terminal Name | Description | Voltage (about) | Symptom |
|---|---|---|---|---|---|
| 11 | YEL | B SIG (Blue signal) | Blue color signal | 0—1 V AC | If open: Blue color missing (see "RGB Color" diagnostic).<br>If short to ground: Blue color missing (see "RGB Color" diagnostic). |
| 12 | BRN | C SIG (Composite signal) | Composite video (vertical/horizontal) Synchronizing signal | 0.3 V AC | If open: Picture rolls horizontally, colors still visible.<br>If short to ground: Picture rolls horizontally, colors still visible. |
| 13 | BLU | GND SIG (Ground signal) | Ground for color signal | 0 V | If open: No change to display.<br>If short to ground: No change to display. |
| 14 | RED | A/C-SO (Air conditioner serial out) | Communication signal for climate control unit | —— | HVAC will not respond to navigation commands. |
| 15 | BLU | A/C-CLK (Air conditioner clock) | Check signal for climate control unit | —— | HVAC will not respond to navigation commands. |
| 17 | BLU | JOG (Interface dial Jog) | Interface dial operation signal | 0—5 V pulses | If open: You cannot operate navigation system<br>If short to ground: You cannot operate navigation system |
| 18 | RED | CAN-L (CAN low) | F-CAN bus communication | Pulses 2.5—6 V average 3 V | If open:<br>1) System Links PCM, and Gauge Control Module both show "NG."<br>2) F-CAN diagnostic = "NG."<br>3) B-CAN diagnostic = "NG."<br>4) Car status CHG (CAN) = 0.<br>5) Functional Setup, Trip info, FUP & Sampled FL = 0.<br>If short to ground: Same diagnostic conditions as when open, and also sets the following DTCs.<br>• B1168 Gauge Control Module loss of Comm. (Engine)<br>• B1169 Gauge Control Module loss of Comm. (A/T)<br>• B1178 F-CAN communication Circuit error.<br>• U0073 (F-CAN bus off)<br>• U0155 (F-CAN Gauge control module)<br>• U0121 (F-CAN VSA control) |
| 19 | GRY | SH JOG (Interface dial Shield jog) | Shield for interface dial signal | —— | —— |
| 20 | RED | ECU BUS (—) (GA-NET) (Display bus negative) | Data bus (—) GA-Net | 0—5 V pulses nominally 2.5 V | If open: Navigation buttons do not work.<br>If short to ground: Hard buttons work OK. |



BACK

Protected by AR

## Navigation Unit Inputs and Outputs for Connector B (14P)

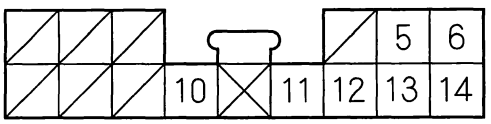


Wire side of female terminals

| Terminal Number | Wire Color | Terminal Name | Description | Voltage (about) | Symptom |
|---|---|---|---|---|---|
| 5 | GRN | RG L (+) (Route guidance voice left positive) | Left audio signal of voice guidance, and Voice Recognition (VR) prompts | Audio signal 0.004—0.04 V | If open: If voice activated, radio speakers buzz; if voice off, no effect.<br>If short to ground: If voice activated, radio speakers buzz; if voice off, no effect. |
| 6 | BLU | MIC SIG (+) (Mic signal positive) | Microphone output signal positive | 4—5 V (TALK button pressed) | If open: No microphone signal shown in diagnostic screens: "Navi System Link" and Functional Setup "Mic Level."<br>If short to ground: No microphone signal shown in diagnostic screens: "Navi System Link" and Functional Setup "Mic Level." |
| 10 | GRN | STRG SW (Steering switches) | Steering switch output | 4—5 V (TALK button pressed)<br>2.5—3 V (BACK button pressed) | If open: Steering wheel Talk and BACK buttons do not work.<br>If short to ground: Steering wheel Talk, and BACK buttons do not work. |
| 11 | GRY | SH RG (Shield route guidance) | Shield for terminal No. 5, 12 | 0 V | If open: No effect on voice output.<br>If short to ground: No effect on voice output. |
| 12 | RED | GND RG (Ground route guidance) | Ground for voice guidance, and Voice Recognition (VR) prompts | 0 V | If open: No effect on voice output.<br>If short to ground: No effect on voice output. |
| 13 | GRY | SH MIC (Shield mic) | Shield for terminal No. 6, 14 | 0 V | If open: No effect on voice control.<br>If short to ground: No effect on voice control. |
| 14 | PNK | GND MIC (Ground mic) | Ground for microphone signal | 0 V | If open: No microphone signal shown in diagnostics: "Navi System Link" and Functional Setup "Mic Level."<br>If short to ground: No effect on voice recognition. |

(cont'd)

Protected by AR



## System Description (cont'd)

### Navigation Unit Inputs and Outputs for Connector C (8P)

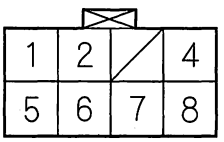


Wire side of female terminals

| Terminal Number | Wire Color | Terminal Name | Description | Voltage (about) | Symptom |
|---|---|---|---|---|---|
| 1 | GRN | +B (+B Power source) | Continuous power source | Battery voltage | If open: Display picture goes out (display back light still on).<br>NOTE: System will reboot to "enter code" screen.<br>If short to ground: Blows fuse No. 23 (10 A) in the under-hood fuse/relay box. |
| 2 | PUR | ACC (Accessory) | Power source for accessories | Battery voltage at ACC (I) | If open: Display picture goes out (display back light still on).<br>If short to ground: Blows fuse No. 35 (7.5 A) in the under-dash fuse/relay box. |
| 4 | BLK | GND (Ground) | Ground for navigation unit | 0 V | If open: No effect on system.<br>If short to ground: No effect on system. |
| 5 | LT BLU | BACK LT (Back light or reverse signal) | Reverse signal of select lever from "Multiplex Integrated Control Unit" (A/T) | In reverse, battery voltage: Otherwise 0 V | If open: Navigation never sees reverse.<br>Diagnostic screen "Car Status," "Back" = 0.<br>If short to ground: Blows fuse No. 14 (7.5 A) in the under-dash fuse/relay box. |
| 6 | BLU | VSP (Vehicle speed pulse) | Vehicle speed pulse signal from PCM | Pulses 0—5 V: Average 2.5 V, when moving | If open: No vehicle speed pulses.<br>Diagnostic screen "Car Status," VSP Navi = 0.<br>If short to ground: No vehicle speed pulses.<br>Diagnostic screen "Car Status," VSP Navi = 0. |
| 7 | RED | DIAG+ (Diagnostic positive) | Service check signal for navigation system | 5—6 V | If open: No effect on system.<br>If short to ground: System goes into diagnostic mode any time the ignition switch is turned ON (I and II). See factory "In Line Diag" (see page 23-169). |
| 8 | YEL | DIAG— (Diagnostic negative) | Ground for service check signal | 0 V | If open: No effect on system.<br>If short to ground: No effect on system. |



BACK

Protected by AR

## Navigation Unit Inputs and Outputs for Connector E (2P)

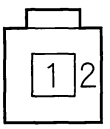


Wire side of female terminals

| Terminal Number | Wire Color | Terminal Name | Description | Voltage (about) | Symptom |
|---|---|---|---|---|---|
| 1 | ——— | SIG | GPS signal | 5 V | If open: GPS icon on screen is white, system links screen ANT shows "NG."<br>If short to body ground: Same as open. |
| 2 | ——— | SH GPS | Ground for GPS signal | 0 V | If open: GPS icon on screen is white, system links screen ANT shows "NG."<br>If short to body ground: No effect on system. |

(cont'd)

Protected by AR



## System Description (cont'd)

### Navigation Unit Inputs and Outputs for Connector F (5P)

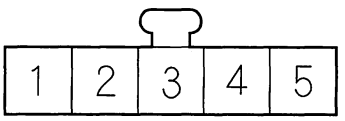


Wire side of female terminals

**USA models**

| Terminal Number | Wire Color | Terminal Name | Description | Voltage (about) | Symptom |
|---|---|---|---|---|---|
| 1 | GRN | HIP/HFL COMM3 (HFL communication 3) | Communication signal for HFL | —— | Solid red HFL icon in Navi System Link. Phone icon in "route to" screen is grayed out. |
| 2 | BLK | HIP/HFL COMM4 (HFL communication 4) | Communication signal for HFL | —— | Solid red HFL icon in Navi System Link. Phone icon in "route to" screen is grayed out. |
| 3 | RED | HIP/HFL COMM1 (HFL communication 1) | Communication signal for HFL | —— | HFL icon in Navi System Link changes between red and green Phone icon in "route to" screen is grayed out. |
| 4 | WHT | HIP/HFL COMM2 (HFL communication 2) | Communication signal for HFL | —— | HFL icon in Navi System Link changes between red and green Phone icon in "route to" screen is grayed out. |
| 5 | GRY | SH HIP/HFL (Shield HFL) | Shield for terminal No. 1, 2, 3, 4 | —— | —— |

**Canada models**

| Terminal Number | Wire Color | Terminal Name | Description | Voltage (about) | Symptom |
|---|---|---|---|---|---|
| 1 | GRN | HFL COMM3 (HFL communication 3) | Communication signal for HFL | —— | Solid red HFL icon in Navi System Link Phone icon in "route to" screen is grayed out. |
| 2 | BLK | HFL COMM4 (HFL communication 4) | Communication signal for HFL | —— | Solid red HFL icon in Navi System Link Phone icon in "route to" screen is grayed out. |
| 3 | RED | HFL COMM1 (HFL communication 1) | Communication signal for HFL | —— | HFL icon in Navi System Link changes between red and green Phone icon in "route to" screen is grayed out. |
| 4 | WHT | HFL COMM2 (HFL communication 2) | Communication signal for HFL | —— | HFL icon in Navi System Link changes between red and green Phone icon in "route to" screen is grayed out. |
| 5 | GRY | HFL COMM SH (Shield HFL) | Shield for terminal No. 1, 2, 3, 4 | —— | —— |



BACK

Protected by AR

## Display Unit Inputs and Outputs for Connector G(7P)

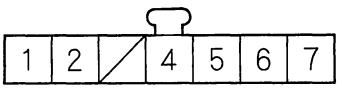


Wire side of female terminals

| Terminal Number | Wire Color | Terminal Name | Description | Voltage (about) | Symptom |
|---|---|---|---|---|---|
| G1 | WHT | VCC (VCC supply) | Power source for rearview camera | 7 V | If open: No rearview camera image. If short to ground: When put into reverse, the navigation screen goes black (backlight still operative). |
| G2 | RED | GND (Ground) | Ground for rearview camera | 0 V | If open: No change to rearview camera image. If short to ground: No change to rearview camera image. |
| G4 | YEL | CAMERA GND (Ground camera) | Ground for rearview camera signal | 0 V | If open: No change to rearview camera image. If short to ground: No change to rearview camera image. |
| G5 | BLK | CAMERA V (Video camera) | Video signal for rearview camera | 0.3 V | If open: No rearview camera image. If short to ground: When put into reverse, the navigation screen goes black (backlight still operative). |
| G6 | GRY | CAMERA SH (Shield camera) | Shield for terminal No. 1 to No. 7 | 0 V | If open: No change to rearview camera image. If short to ground: No change to rearview camera image. |
| G7 | GRN | CAMERA ADPT (Adaptive camera) | Control signal for rearview camera | 0 V | If open: No change to rearview camera image. If short to ground: No change to rearview camera image. |

(cont'd)

Protected by AR



## System Description (cont'd)

### Navigation display Unit Inputs and Outputs for 20P Connector

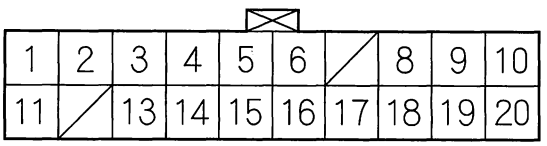


Wire side of female terminals

| Terminal Number | Wire Color | Terminal Name | Description | Voltage (about) | Symptom |
|---|---|---|---|---|---|
| 1 | GRN | +B (+B power source) | Continuous power source | Battery voltage | If open: Screen completely off (no backlight visible). If short to ground: Blows fuse No. 23 (10 A) in the under-hood fuse/relay box. |
| 2 | PUR | ACC (Accessory) | Power source for accessory | Battery voltage at ACC (I) | If open: Display and buttons do not work. If short to ground: Blows fuse No. 35 (7.5 A) in the under-dash fuse/relay box. |
| 3 | LT BLU | BUS (−) (GA-NET) | Data bus (+) GA-Net | 0—5 V pulses average 2.5 V depends on bus traffic | If open: Navigation buttons and touch screen do not work. If short to ground: Navigation buttons do not work. |
| 4 | GRY | BUS SH (GA-NET) | Shield for terminal No. 3, 13 | 0 V | If open: No change to display. If short to ground: No change to display. |
| 5 | GRN | DISP BUS (+) (GA-NET) (Display bus positive) | Data bus (+) GA-Net | 0—5 V pulses average 2.5 V depends on bus traffic | If open: Navigation buttons do not work. If short to ground: Navigation buttons do not work. |
| 6 | YEL | SECURITY (+) | Security signal to rear screen | 0 V | If open: The security system will set, and will not trip when screen is removed. If short to ground: The security system will set, and will not trip when screen is removed. |
| 8 | WHT | R SIG (Red signal) | Red color signal | 0—1 V AC | If open: Red color missing (see "RGB Color" diagnostic). If short to ground: Red color missing (see "RGB Color" diagnostic). |
| 9 | RED | G SIG (Green signal) | Green color signal | 0—1 V AC | If open: Green color missing (see "RGB Color" diagnostic). If short to ground: Green color missing (see "RGB Color" diagnostic). |
| 10 | BLK | GND (Ground) | Ground for display unit | 0 V | If open: No change to display. If short to ground: No change to display. |



BACK

Protected by AR

| Terminal Number | Wire Color | Terminal Name | Description | Voltage (about) | Symptom |
|---|---|---|---|---|---|
| 11 | GRY | ILL (+) (Illumination positive) | Parking light on signal from dash and console lights | Battery voltage if lights on: otherwise 0 V | If open: When brightness="Auto", night mode for the display is inoperative when lights on.<br>If short to ground: Blows fuse No. 14 (7.5 A) in the under-dash fuse/relay box. |
| 13 | PUR | BUS (+) (GA-NET) | Data bus (—) GA-Net | 0—5 V pulses average 2.5 V depends on bus traffic | If open: Navigation buttons do not work.<br>If short to ground: Hard buttons work OK. |
| 14 | GRY | SH DISP BUS (GA-NET) (Shield display bus) | Shield for display bus terminal No. 5, 15 | 0 V | If open: No change to display.<br>If short to ground: No change to display. |
| 15 | RED | ECU BUS (—) (GA-NET) (Display bus negative) | Data bus (—) GA-Net | 0—5 V pulses average 2.5 V depends on bus traffic | If open: Navigation buttons and touch screen do not work.<br>If short to ground: Hard and touch buttons work OK. |
| 16 | BRN | SECURITY (—) | Security signal from CD changer | 0 V | If open: The security system will set, and will not trip when screen is removed.<br>If short to ground: The security system will set, and will not trip when screen is removed. |
| 17 | BLU | GND SIG (Ground signal) | Ground for color signal | 0 V | If open: No change to display.<br>If short to ground: No change to display. |
| 18 | YEL | B SIG (Blue signal) | Blue color signal | 0—1 V AC | If open: Blue color missing (see "RGB Color" diagnostic).<br>If short to ground: Blue color missing (see "RGB Color" diagnostic). |
| 19 | BRN | C SIG (Composite signal) | Composite video (vertical/horizontal) synchronizing signal | 0.3 V AC | If open: Picture rolls horizontally, colors still visible.<br>If short to ground: Picture rolls horizontally, colors still visible. |
| 20 | GRY | SH SIG (Shield signal) | Shield for terminal No. 8, 9, 17, 18, 19 | 0 V | If open: No change to display.<br>If short to ground: No change to display. |

(cont'd)

Protected by AR



## System Description (cont'd)

### Interface Dial Inputs and Outputs for 5P Connector

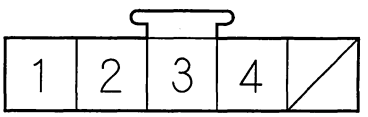


Wire side of female terminals

| Terminal Number | Wire Color | Terminal Name | Description | Voltage (about) | Symptom |
|---|---|---|---|---|---|
| 1 | BLU | JOG (jog) | Interface dial operation signal | 0—5 V pulses | If open: You can not operate navigation system.<br>If short to ground: You can not operate navigation system. |
| 2 | GRY | SH JOG (Shield jog) | Shield for interface dial signal | —— | —— |
| 3 | BLK | GND (Ground) | Ground for interface dial | 0 V | If open: You can not operate navigation system.<br>If short to ground: You can not operate navigation system. |
| 4 | PUR | ACC (Accessory) | Power source for interface dial | Battery voltage at ACC (I) | If open: You can not operate navigation system.<br>If short to ground: Blows fuse No. 35 (7.5 A) in the under-dash fuse/relay box. |



BACK

Protected by AR

## Rearview Camera Inputs and Outputs for 6P Connector

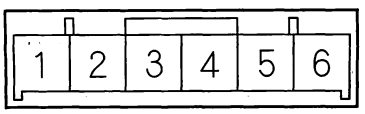


Terminal side of male terminals

| Terminal Number | Wire Color | Terminal Name | Description | Voltage (about) | Symptom |
|---|---|---|---|---|---|
| 1 | GRN | CAMERA ADPT (Adaptive camera) | Control signal for rearview camera | 0 V | If open: No change to rearview camera image. If short to ground: No change to rearview camera image. |
| 2 | GRY | CAMERA SH (Shield camera) | Shield for terminal No. 5 | 0 V | If open: No change to rearview camera image. If short to ground: No change to rearview camera image. |
| 3 | BLK | VIDEO (Video camera) | Video signal for rearview camera | 0.3 V | If open: No rearview camera image. If short to ground: When put into reverse, navigation screen goes black (display backlight still operative). |
| 4 | YEL | VIDEO GND (Ground camera) | Ground for rearview camera signal | 0 V | If open: No change to rearview camera image. If short to ground: No change to rearview camera image. |
| 5 | RED | CAMERA GND (Ground) | Ground for rearview camera | 0 V | If open: No change to rearview camera image. If short to ground: No change to rearview camera image. |
| 6 | WHT | CAMERA VCC (VCC supply) | Power source for rearview camera | 8 V | If open: No rearview camera image. If short to ground: When put into reverse, navigation screen goes black (display backlight still operative). |

Protected by AR

# Navigation System

## Circuit Diagram

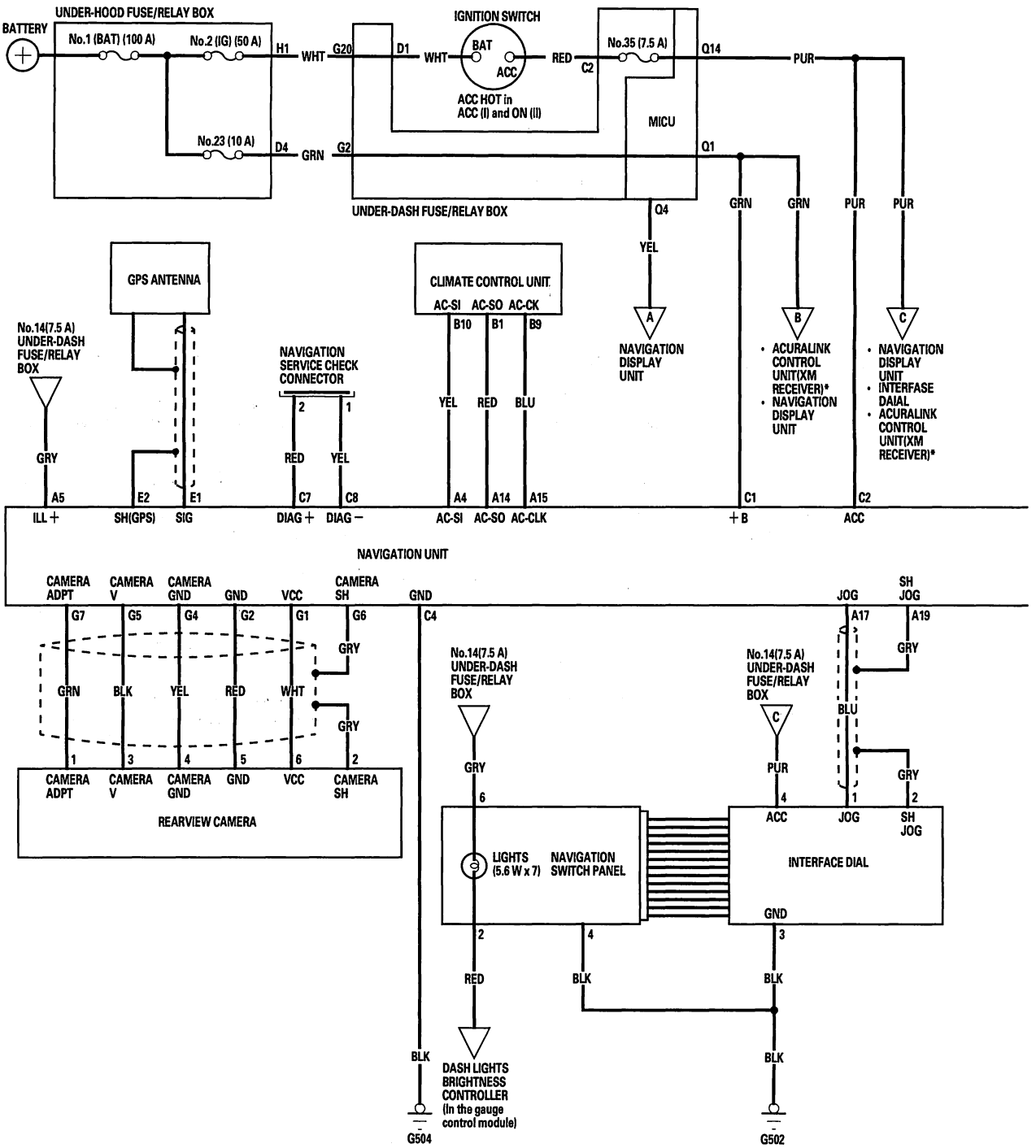




BACK

Protected by AR

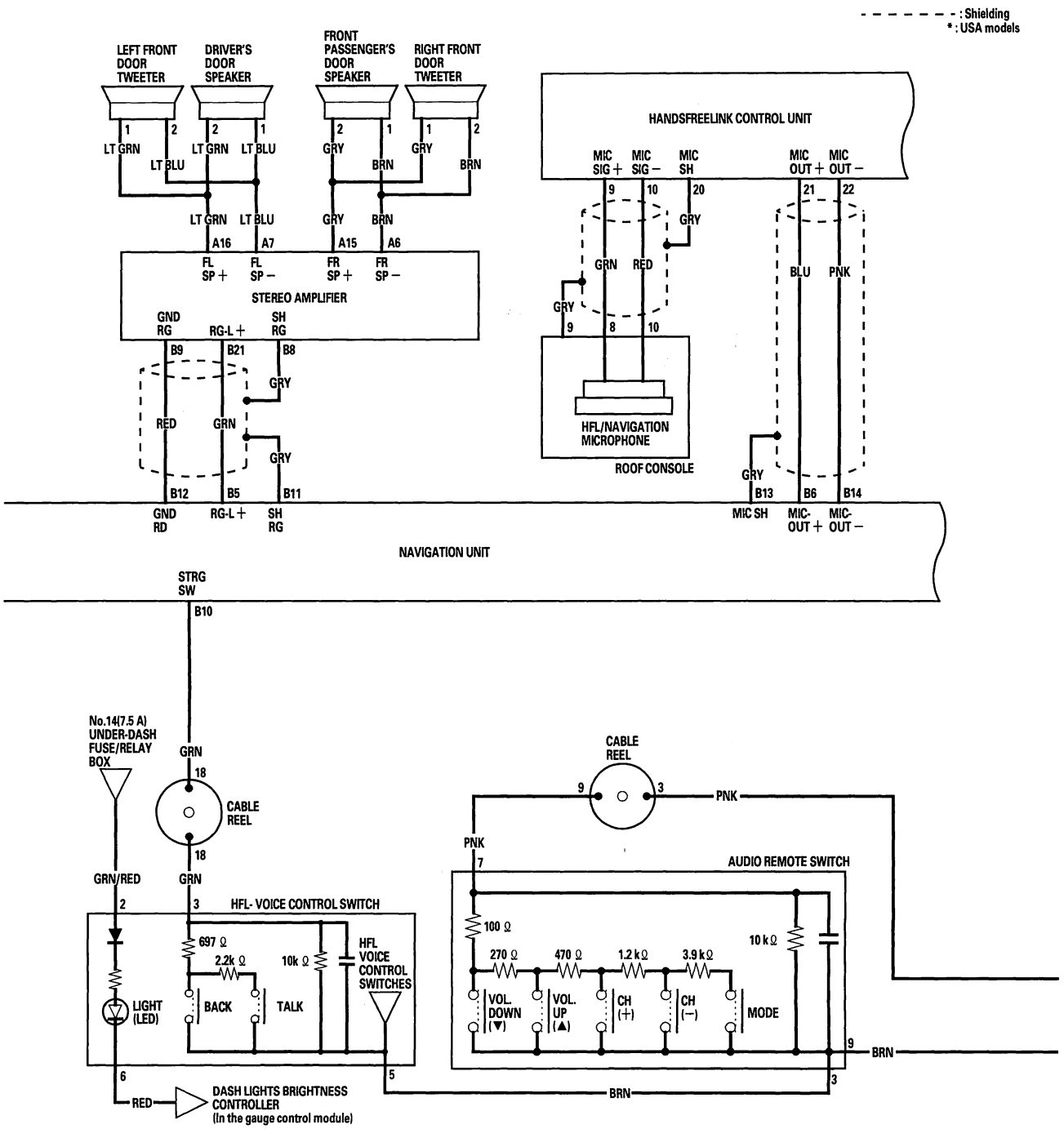


(cont'd)

Protected by AR

# Navigation System

## Circuit Diagram (cont'd)

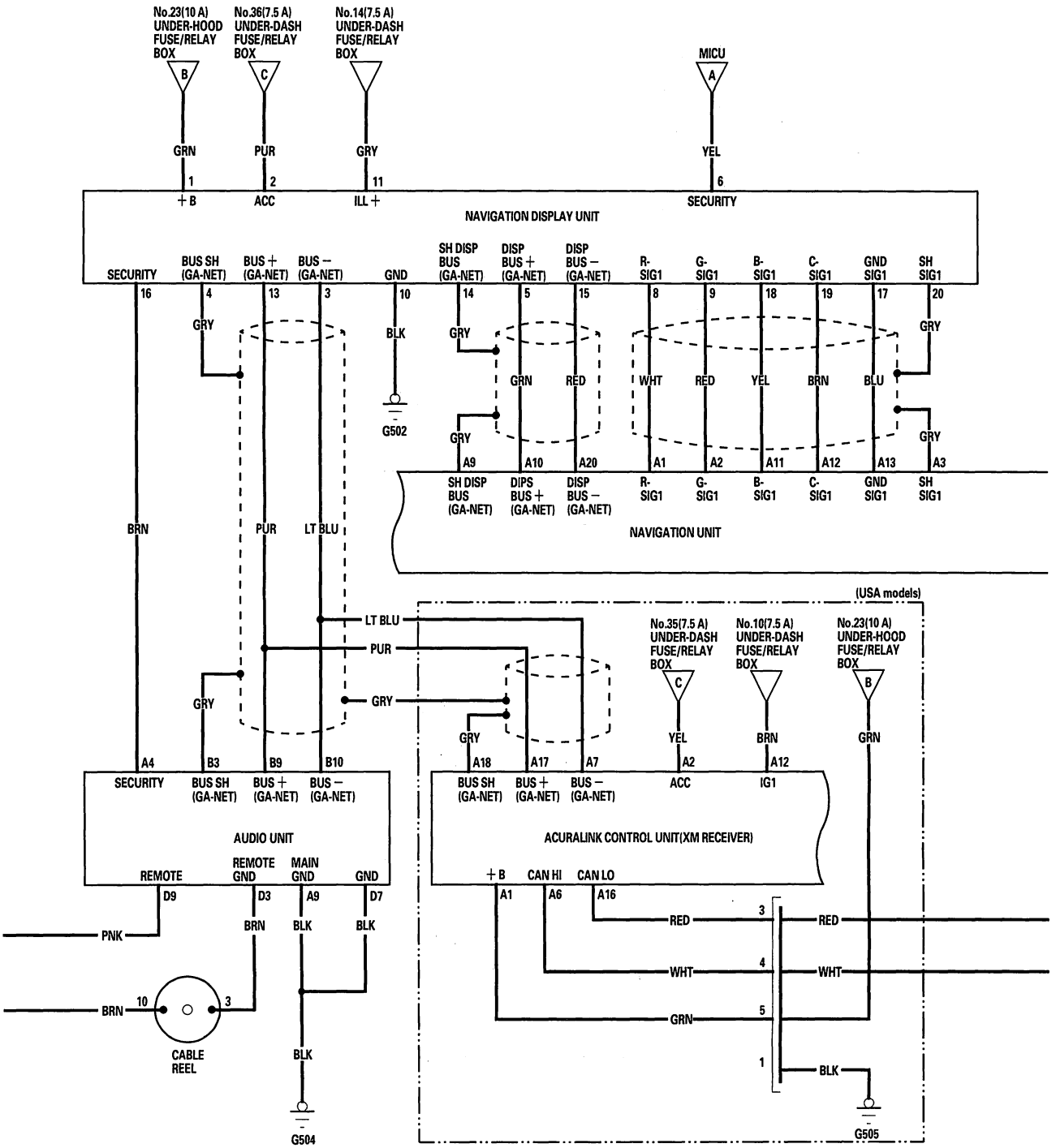




BACK

Protected by AR

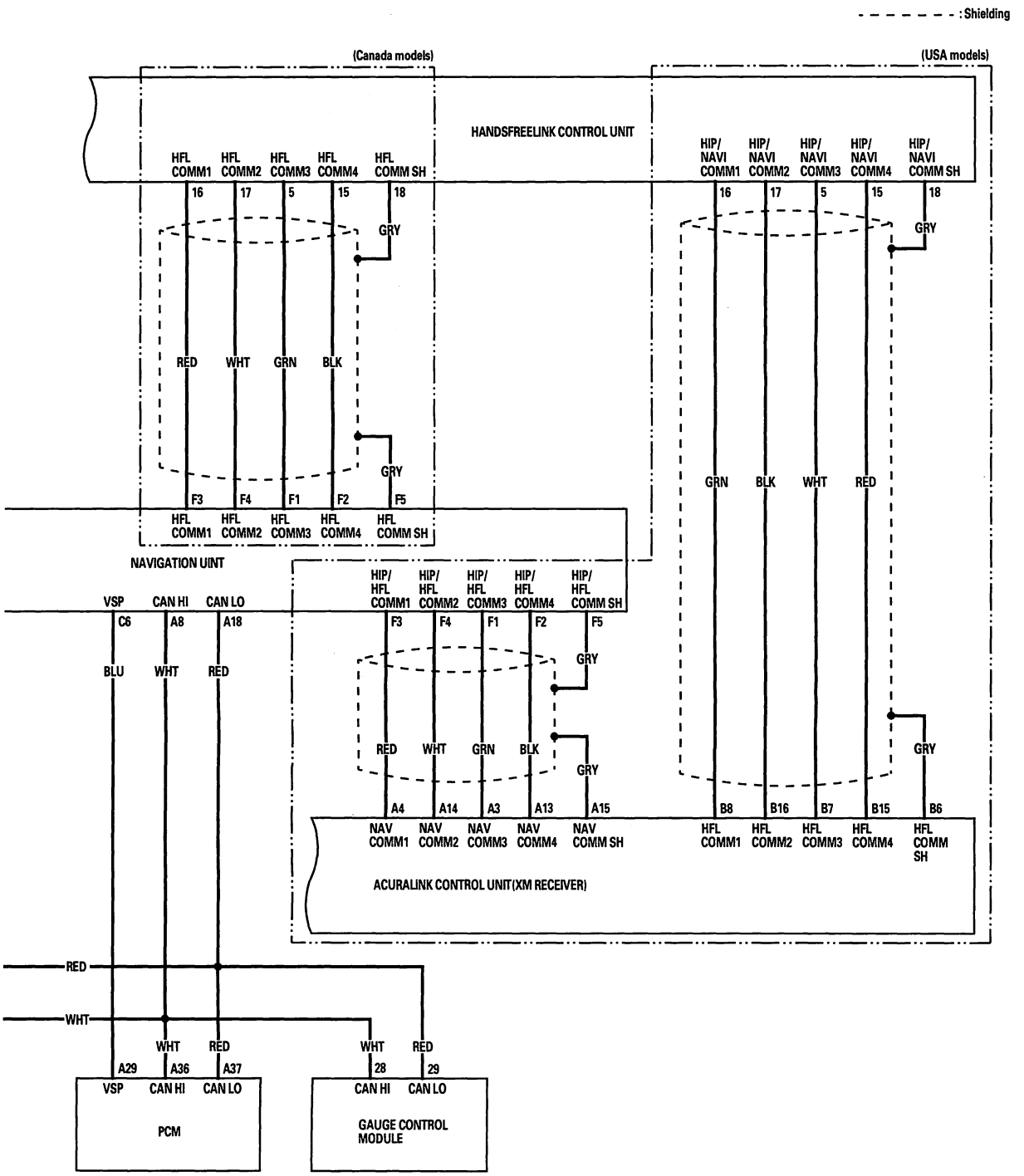


(cont'd)

BACK

Protected by AR



## Circuit Diagram (cont'd)

**Navigation unit connectors**

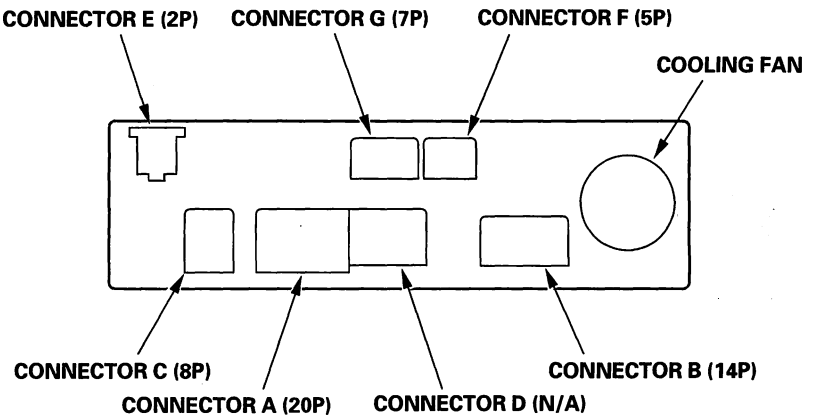


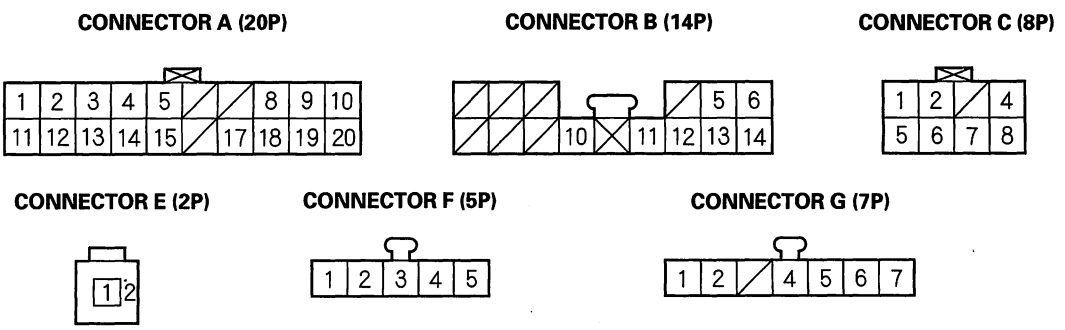


Wire side of female terminals



BACK

Protected by AR

**Navigation display unit 20P connector**

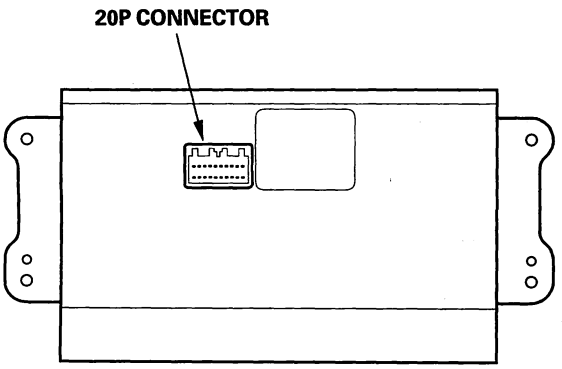


**20P CONNECTOR**

| | | | | | | | | | |
|---|---|---|---|---|---|---|---|---|---|
| 1 | 2 | 3 | 4 | 5 | 6 | | 8 | 9 | 10 |
| 11 | | 13 | 14 | 15 | 16 | 17 | 18 | 19 | 20 |

Wire side of female terminals

**Interface dial 5P connector**

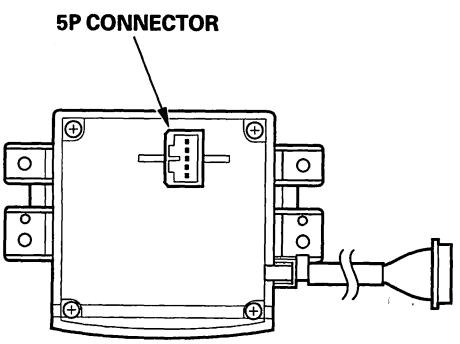


**5P CONNECTOR**

| | | | | |
|---|---|---|---|---|
| 1 | 2 | 3 | 4 | |

Wire side of female terminals

Protected by AR



## Symptom Troubleshooting

### No picture is displayed

**Diagnostic Test: Navi System Link**

NOTE:
- Check the navigation volume level (see owner's manual for more information).
- Always check the connectors for poor connections or loose terminals.
- Before troubleshooting, make sure you have the navigation system anti-theft code.
- Confirm the correct DVD color and version disc is installed in the navigation unit (see page 23-189).

1. Check the No. 23 (10 A) fuse in the under-hood fuse /relay box and No. 35 (7.5 A) fuse in the under-dash fuse relay box, and reinstall the fuses if they are OK.

   *Are the fuses OK?*

   **YES**—Go to step 2.

   **NO**—Replace the fuse and recheck.■

2. Turn the ignition switch to ACC (I).

3. Operate the radio and listen to the audio.

   *Can you hear the audio?*

   **YES**—Go to step 4.

   **NO**—Check the ACC circuit or refer to the audio system troubleshooting.■

4. Turn the ignition switch ON (II).

5. Measure the voltage between body ground and navigation unit connector C (8P) terminals No. 1 and No. 2 individually.

**NAVIGATION UNIT CONNECTOR C (8P)**

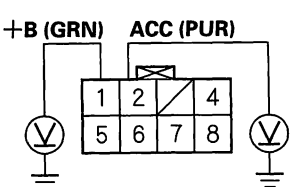


Wire side of female terminals

*Is there battery voltage?*

**YES**—Go to step 6.

**NO**—If the +B wire does not have voltage, repair an open in the wire between the under-hood fuse relay box and the navigation unit. If the ACC wire does not have voltage, repair open in the wire between the under-dash fuse/relay box and the navigation unit.■

6. Turn the ignition switch OFF.

7. Disconnect navigation unit connector C (8P).

8. Check for continuity between navigation unit connector C (8P) terminal No. 4 and body ground.

**NAVIGATION UNIT CONNECTOR C (8P)**

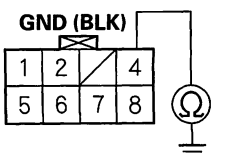


Wire side of female terminals

*Is there continuity?*

**YES**—Go to step 9.

**NO**—Repair open in the wire between the navigation unit and body ground (G504) (see page 22-60).■

9. Reconnect navigation unit connector C (8P).

10. Perform the forced starting of the display (see page 23-189).

    *Is the diagnosis menu of the picture diagnosis displayed?*

    **YES**—Go into the Diagnostic mode and use the "Navi System Link" diagnostic (see page 23-170) to check the links.■

    **NO**—Go to step 11.



BACK

Protected by AR

11. Shield the display unit from the sun with your hand, and check that the display is back lit (only back light is ON.)

    *Can you see the back light?*

    **YES**—Replace the navigation unit (see page 23-190) and retest. If the problem is still present, replace the navigation display unit (see page 23-191).■

    **NO**—Go to step 12.

12. Turn the ignition switch ON (II).

13. Measure the voltage between body ground and navigation display unit 14P connector terminal No. 1 and No. 2 individually.

**NAVIGATION DISPLAY UNIT 20P CONNECTOR**

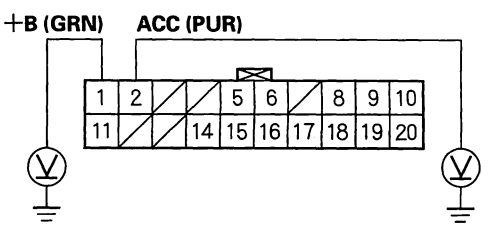


Wire side of female terminals

*Is there battery voltage?*

**YES**—Replace the navigation display unit.■

**NO**—If the +B wire does not have voltage, repair open in the wire between the under-hood fuse relay box and the navigation display unit 20P connector. If the ACC wire does not have voltage, repair open in the wire between the under-dash fuse/relay box and the navigation display unit 20P connector.■

## Vehicle position icon constantly leaves road, moves erratically, or is very far from actual position

NOTE:
- Check for aftermarket accessories that could interfere with the GPS signal.
- Check that the GPS antenna is plugged in.

1. Check the GPS icon on the navigation picture.

   *Is the GPS icon white?*

   **YES**—Do the troubleshooting for GPS icon is white or not shown (see page 23-156).■

   **NO**—Go to step 2.

2. Go into the Diagnostic Menu, and use the "Yaw Rate" test (see page 23-178) to check the yaw rate sensor.

3. Go into the Diagnostic Menu, and use the "Car Status" test (see page 23-175) to check the vehicle speed pulse.

   *Are the yaw rate sensor and vehicle speed pulse OK?*

   **YES**—The problem may be normal. Check to see if the problem occurs in the same place. If it does, the problem could be in the database. Go to step 4.

   **NO**—If the problem is the yaw rate sensor, replace the navigation unit (see page 23-190). If the problem is the vehicle speed pulse, check for an open in the wire between the navigation unit and the PCM. If the wire is OK, troubleshoot the vehicle speed signal circuit.■

4. Substitute a known-good navigation unit, and check to see if the problem occurs in the same place.

   *Does the problem occur in the same place?*

   **YES**—The problem is in the database. Report the problem according to the Navigation System Manual under "Reporting Errors."■

   **NO**—Replace the original navigation unit (see page 23-190).■

Protected by AR



## Symptom Troubleshooting (cont'd)

### Picture is missing a color or tone or is an odd color

NOTE:
- Confirm the correct DVD color and version disc is installed in the navigation unit (see page 23-189).
- Always check the connectors for poor connections or loose terminals.
- Before troubleshooting, get the navigation system anti-theft codes.
- After troubleshooting, enter the navigation system anti-theft codes.
- Check for aftermarket accessories that may interfere with the navigation system

1. Go into the Diagnostic Menu, and use "RGB Color" test under Monitor Check (see page 23-171).

   *Are the red, green, and blue colored circles shown?*

   **YES**—The system is OK at this time.■

   **NO**—Go to step 2.

2. Turn the ignition switch to OFF.

3. Disconnect navigation unit connector A (20P) and the navigation display unit 20P connector.

4. Check for loose terminals at navigation unit connector A (20P) and the navigation display unit 20P connector.

   *Are there loose terminals?*

   **YES**—Repair the terminal.■

   **NO**—Go to step 5.

5. Check for continuity between the appropriate terminals of navigation unit connector A (20P) and the navigation display unit 20P connector based on the missing color(s).

| Missing color | Navigation unit connector A (20P) | Navigation display unit 20P connector | Wire color |
|---|---|---|---|
| Blue | A11 | 18 | YEL |
| Green | A2 | 9 | RED |
| Red | A1 | 8 | WHT |

**NAVIGATION UNIT CONNECTOR A (20P)**

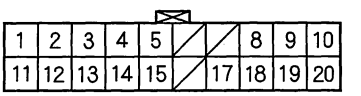


Wire side of female terminals

**NAVIGATION DISPLAY UNIT 20P CONNECTOR**

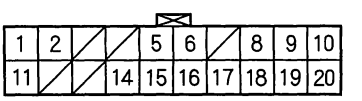


Wire side of female terminals

*Is there continuity?*

**YES**—Go to step 6.

**NO**—There is an open in the circuit between the navigation display unit and the navigation unit. Check for poor connections or loose terminals at the navigation display unit and navigation units. If a poor connection or loose terminal is found, replace the affected shielded harness.■



BACK

Protected by AR

6. Check for continuity between the appropriate terminals of navigation unit connector A (20P) and the navigation display unit 20P connector based on the missing color(s).

| Missing color | Navigation unit connector A (12P) | Display unit 20P connector |
|---|---|---|
| Blue | A11 | 10, 20 |
| Green | A2 | 10, 20 |
| Red | A1 | 10, 20 |

**NAVIGATION UNIT CONNECTOR A (20P)**

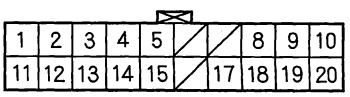


Wire side of female terminals

**NAVIGATION DISPLAY UNIT 20P CONNECTOR**

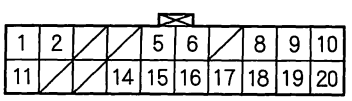


Wire side of female terminals

*Is there continuity?*

**YES**—There is a short to body ground in the circuit between the navigation display unit and the navigation unit. Replace the affected shielded harness. ■

**NO**—Replace the navigation unit. If the problem is still unresolved, replace the navigation display unit. ■

## Picture has lines/rolls/other issues or is an odd color

**Diagnostic Test: Monitor Check**

NOTE:
- Always compare the screen image to a known-good vehicle. If the screen looks the same, inform the client that it is characteristic.
- Always check the connectors for poor connections or loose terminals.
- Before troubleshooting, make sure you have the navigation system anti-theft code.

1. Check for electronic aftermarket accessories (possibly hidden) mounted near the display unit or the navigation unit.

   *Are there any electronic accessories?*

   **YES**—Disable the accessories, and recheck. ■

   **NO**—Go to step 2.

2. Start up the navigation picture.

   *Is the picture scrolling horizontally (left to right or right to left)?*

   **YES**—Check for an open or short to ground in the C SIG wire from navigation unit connector A (20P) terminal No. 12 to navigation display unit 20P connector terminal No. 19. Also check for a short to ground between navigation display unit 20P connector terminal No. 19 and terminal No. 20. ■

   **NO**—Go to step 3.

3. Go into the Diagnostic mode, and use "RGB Color" diagnostic under Monitor Check (see page 23-171).

   *Is the picture missing a red, green or blue color?*

   **YES**—Do troubleshooting for the picture is missing a color or tone or is an odd color (see page 23-152). ■

   **NO**—Go to step 4.

(cont'd)

Protected by AR



## Symptom Troubleshooting (cont'd)

4. Turn the ignition switch OFF.

5. Substitute a known-good navigation display unit (see page 23-191), and recheck.

   *Is the picture OK?*

   **YES**—Check for loose connections, then replace the original navigation display unit (see page 23-191). ■

   **NO**—Check for loose connections and recheck. If a poor connection or loose terminal is found, replace the shielded harness. If no poor or loose terminals are found, substitute a known-good navigation unit (see page 23-190) and recheck. If the problem is gone, replace the original navigation unit (see page 23-190). ■

### Interface dial buttons do not work

NOTE:
- Confirm the correct DVD color and version disc is installed in the navigation unit (see page 23-189).
- Always check the connectors for poor connections or loose terminals.
- Before troubleshooting, get the navigation system anti-theft codes.
- After troubleshooting, enter the navigation system anti-theft codes.

1. Turn the ignition switch to ACC (I).

2. Go into the Diagnostic mode, and use "Hard Key" test under Unit Check (see page 23-172).

   *Do the buttons work properly?*

   **YES**—The system is OK at this time. ■

   **NO**—Go to step 3.

3. Try all the buttons on the navigation system.

   *Is there a specific row or columns of buttons, set of buttons, or a certain button that does not respond properly (i.e. pressing a button in the lower left corner causes a button in the right lower corner to respond.)?*

   **YES**—Replace the interface dial (see page 23-191). ■

   **NO**—Go to step 4.



BACK

Protected by AR

4. Turn the ignition switch ON (II).

5. Measure the voltage between the interface dial 5P connector terminal No. 4 and body ground.

**INTERFACE DIAL 5P CONNECTOR**

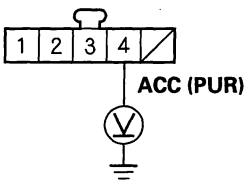


Wire side of female terminals

*Is there battery voltage?*

**YES**—Go to step 6.

**NO**—Repair open in the wire between the under-dash fuse/relay box and the interface dial.■

6. Turn the ignition switch OFF.

7. Disconnect the interface dial 5P connector.

8. Check for continuity between interface dial 5P connector terminal No. 3 and body ground.

**INTERFACE DIAL 5P CONNECTOR**

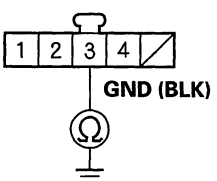


Wire side of female terminals

*Is there continuity?*

**YES**—Go to step 9.

**NO**—Repair an open in the wire between the interface dial and body ground (G502) (see page 22-60).■

9. Check for continuity between navigation unit connector A (20P) terminal No. 17 and interface dial 5P connector terminal No. 1.

**NAVIGATION UNIT CONNECTOR A (20P)**

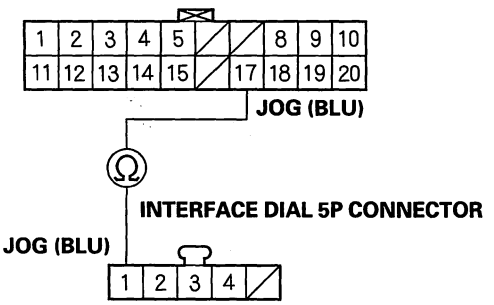


Wire side of female terminals

*Is there continuity?*

**YES**—Check for an open in the wire between the navigation unit connector A (20P) terminal No. 19 and the interface dial 5P connector terminal No. 2. If the wire is OK, go to step 10. If the wire is open, repair the wire.

**NO**—There is an open in the circuit between the interface dial and the navigation unit. Check for poor connections or loose terminals at the interface dial and navigation unit. If a poor connection or loose terminals is found, replace the affected shielded harness.■

10. Substitute a known-good interface dial (see page 23-191), and recheck.

*Is the system OK?*

**YES**—Replace the original interface dial (see page 23-191).■

**NO**—Replace the navigation unit (see page 23-190).■

Protected by AR



## Symptom Troubleshooting (cont'd)

### GPS icon is white or not shown

**Diagnostic Test: Navi System Link**

NOTE:
- With proper reception, the icon normally appears green.
- Make sure the GPS antenna is plugged in.
- Check for any aftermarket accessories that may be interfering with the GPS signal.
- Make sure the vehicle is parked outside and away from buildings.
- Refer to GPS Information (see page 23-177) for realtime satellite reception display.

1. Check for metallic window tint on the windshield and electronic aftermarket accessories (possibly hidden) mounted near the GPS antenna or the navigation unit.

   *Is there metallic window tint or electronic accessories?*

   **YES**—Remove tint or the accessories and recheck.■

   **NO**—Go to step 2.

2. Go into the Diagnostic mode, and use the "Navi System Link" diagnostic (see page 23-170) to check the GPS antenna.

   *Is "GPS Ant" icon red?*

   **YES**—Check for a kinked, crushed, or disconnected GPS antenna wire. If icon is still red, replace the GPS antenna.■

   **NO**—Check that nothing is blocking the GPS antenna located under the dashboard upper panel and recheck. Substitute a known-good GPS antenna, and recheck.■

   - If the symptom is gone, replace the GPS antenna.
   - If the symptom is still present, substitute a known-good navigation unit and recheck. If the symptom is gone, replace the original navigation unit (see page 23-190).

### Voice guidance cannot be heard, is broken up, or there is too much static

**Diagnostic Test: Navi System Link**

NOTE:
- Check the navigation volume level (see Owner's Manual).
- Always check the connectors for poor connections or loose terminals.
- Before troubleshooting, make sure you have the audio and navigation system anti-theft codes, then write down the audio presets.
- After troubleshooting, enter the audio and navigation system anti-theft codes, then enter the audio presets.

1. Press the display unit SET-UP button.

2. Check the volume and voice feedback setting for the navigation system in set-up.

   *Is either set to OFF?*

   **YES**—Set the voice feedback to ON and select an audible level for the volume.■

   **NO**—Go to step 3.

3. Check the radio operation.

   *Can you hear the radio?*

   **YES**—Go to step 4.

   **NO**—Troubleshoot audio system.■

4. Go into the Diagnostic mode, and use the "Navi System Link" diagnostic (see page 23-170) to check the radio.

   *Is "Radio" icon red?*

   **YES**—Troubleshoot the audio system (see page 23-197).■

   **NO**—Go to step 5.

5. Turn the ignition switch OFF.

6. Disconnect navigation unit connector B (14P) and the stereo amplifier connector B (28P).



BACK

Protected by AR

7. Check for continuity between body ground and navigation unit connector B (14P) terminals No. 5 and No. 12 individually.

**NAVIGATION UNIT CONNECTOR B (14P)**

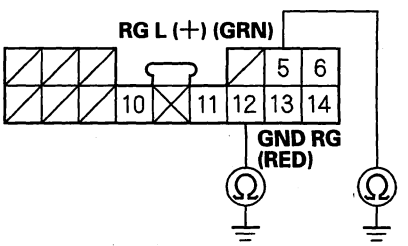


Wire side of female terminals

*Is there continuity?*

**YES**—Replace the affected shielded harness. ■

**NO**—Go to step 8.

8. Check for continuity between navigation unit connector B (14P) terminal No. 11 and terminals No. 5 and No. 12 individually.

**NAVIGATION UNIT CONNECTOR B (14P)**

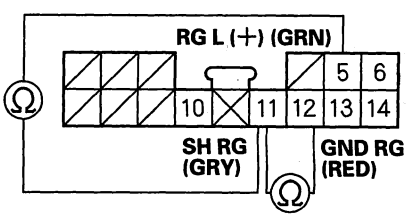


Wire side of female terminals

*Is there continuity?*

**YES**—Replace the affected shielded harness. ■

**NO**—Go to step 9.

9. Check for continuity between navigation unit connector B (14P) terminal No. 5 and the stereo amplifier connector B (28P) terminal No. 21.

**NAVIGATION UNIT CONNECTOR B (14P)**
Wire side of female terminals

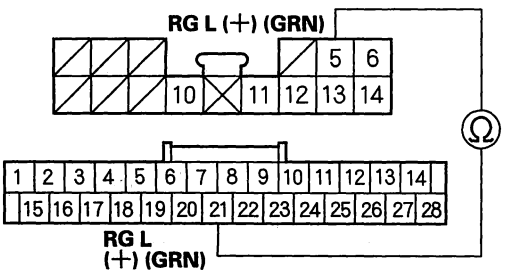


**STEREO AMPLIFIER CONNECTOR B (28P)**
Wire side of female terminals

*Is there continuity?*

**YES**—Go to step 10.

**NO**—There is an open in the wire between the navigation unit and stereo amplifier. Check for poor connections or loose terminals at the stereo amplifier and navigation units. If a poor connection or loose terminal is found, replace the affected shielded harness. ■

(cont'd)

Protected by AR



## Symptom Troubleshooting (cont'd)

10. Check for continuity between navigation unit connector B (14P) terminal No. 12 and the stereo amplifier connector B (28P) terminal No. 9.

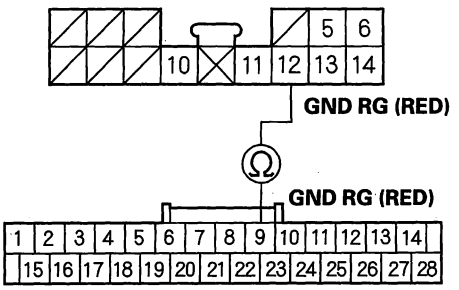


*Is there continuity?*

**YES**—Go to step 11.

**NO**—There is an open in the wire between the navigation unit and the stereo amplifier. Check for poor connections or loose terminals at the stereo amplifier and navigation units. If a poor connection or loose terminal is found, replace the affected shielded harness. ■

11. Substitute a known-good stereo amplifier, and recheck.

*Is the system OK?*

**YES**—Replace the stereo amplifier. ■

**NO**—Replace the navigation unit (see page 23-190). ■

### Voice control does not work/respond

**Diagnostic Test: Mic Level**

NOTE:
- Before assuming that a voice complaint is hardware related, ensure that the voice control system is being operated correctly.
  - Make sure you are on the correct screen when trying to issue a voice command. For instance, the command "Find the nearest Italian Restaurant" only works on Map screen. (See the Navigation System manual for a complete list of allowed voice commands for the information being displayed).
  - Close the windows and moonroof.
  - Set the fan speed to low (1 or 2).
  - Adjust the air flow from the air conditioning vents so that they do not blow against the microphone on the ceiling. Pay particular attention to the passenger's side air vent adjustment. The microphone will pick up noise if the passenger's side vent is pointed directly at it, potentially rendering the Navi and HFL Voice Recognition inoperative.
  - Pause after pressing the TALK button then give a voice command clearly in a natural speaking voice. If the system cannot recognize your command, speak louder.
  - If the microphone picks up voices other than yours, the system may not interpret your voice commands correctly.
  - If you speak a command with something in your mouth, or your voice is too husky, the system may misunderstand your command.
- Always check the connectors for poor connections or loose terminals.
- Check for a loose roof console microphone; if it's loose, tighten it.
- Before troubleshooting, make sure you have the audio and navigation system anti-theft codes, then write down the audio presets.
- After troubleshooting, enter the audio and navigation system anti-theft codes, then enter the audio presets.



BACK

Protected by AR

1. Go into the Diagnostic Menu, and use the "Mic Level" test under Functional Setup (see page 23-180) to check the operation of the TALK and BACK buttons.

   *Are the TALK and BACK buttons operational?*

   **YES**—Go to step 2.

   **NO**—Check for an open or short to ground on navigation unit connector B (14P) terminal No. 10.■

2. Use the "Mic Level" diagnostic under Functional Setup (see page 23-180) to check the operation of the microphone.

   *Is the microphone operational?*

   **YES**—Check the operation of the voice control system (see the Navigation System Manual).■

   **NO**—Check for a loose front map light (microphone) assembly. If OK, check for an open or short to ground navigation unit connector B (14P) terminals No. 6 and No. 14 or a short to ground between the navigation unit B (17P) terminal No. 6 and HandsfreeLink control unit terminal No. 21, and between navigation unit connector B (14P) terminal No. 14 and HandsfreeLink control unit terminal No. 22.■

## DVD screen error messages

**Diagnostic Test: Car Status**

NOTE:
- Confirm the correct DVD color and version disc is installed in the navigation unit (see page 23-189).
- Refer to General Troubleshooting for a list of common DVD screen error messages and the probable causes (see page 23-188).
- Go into the Diagnostic mode and use the "Car Status" diagnostic (see page 23-175) to check the status of the DVD lid.
- Inspect the navigation DVD for scratches or damage.
- The following troubleshooting is for the error message shown on the error messages table (see page 23-188).

1. Check the DVD-ROM reading surface for scratches and finger prints.

   *Are there any scratches or finger prints on the DVD-ROM reading surface?*

   **YES**—Clean or replace the DVD-ROM (see page 23-189).■

   **NO**—If the problem occurs occasionally when the system is cold, this is normal. If the problem occurs frequently when driving, replace the navigation unit (see page 23-190).■

Protected by AR



## Symptom Troubleshooting (cont'd)

### Navigation cannot control A/C by voice

NOTE:
- Always check and repair all CAN DTCs before troubleshooting the navigation system.
- Always check the connectors for poor connections or loose terminals.
- Before troubleshooting, get the navigation system anti-theft codes.
- After troubleshooting, enter the navigation system anti-theft codes.
- Verify that the correct navigation unit is installed for this model. Go into the Diagnostic mode and use "Version" (see page 23-186).

1. Go into the Diagnostic Mode, and use the "Navi System Link" check (see page 23-170).

   *Is "Air-con" icon red?*

   **YES**—Do the climate control system self check troubleshooting.■

   **NO**—Check for an open or short to ground between navigation unit connector A (20P) terminals No. 4, No. 14, and No. 15, and climate control unit connector B (16P) terminals No. 10, No. 1, and No. 9. If OK, check the climate control system for normal operation. If the climate control system works properly, substitute a known-good navigation unit and recheck. If no problems are found, check the connection at the air conditioning control unit. If the connections are OK, replace the climate control unit.■

### Display day/night mode does not work

NOTE:
- Check that the dash brightness setting is not set to high.
- Always check the connectors for poor connections or loose terminals.
- Before troubleshooting, get the navigation system anti-theft codes.
- After troubleshooting, enter the navigation system anti-theft codes.

1. Turn the headlights on, and adjust the dash brightness to the middle range.

   *Does the display change to day and night modes when turning the headlights on and off?*

   **YES**—The system is OK at this time.■

   **NO**—Go to step 2.

2. Go into the Diagnostic Mode, and use the "Car Status" diagnostic to check for an ILL signal (see page 23-175).

   *Is the "ILL" signal OK?*

   **YES**—The system is OK.■

   **NO**—Check the ILL+ circuit for an open or short to ground between the navigation unit and small light relay. If OK, substitute a known-good navigation unit and recheck.■



BACK

Protected by AR

## System locks up or freezes constantly

NOTE: Check the GPS and VSP signals in the GPS information check (see page 23-177) and car status (see page 23-175).

1. Start the engine, turn the ignition switch OFF, then turn the ignition switch ON (II).

   *Does the system reboot?*

   **YES**—The system is OK at this time. ■

   **NO**—Check the DVD for the correct color, software version, scratches or damage and the navigation unit for water damage. If OK, go into the Diagnostic mode and do all of the "Unit Check" diagnostics (see page 23-172). ■

## Vehicle icon wanders across the map when driving (does not follow a displayed road) or map vehicle ICON spins

NOTE:
- This is not the same condition as when driving off-road (or on a fire or logging road).
- This condition is caused by a loss of map matching from a bad sensor input. Check for aftermarket or other objects that can block the GPS signal. Always perform Map matching (see page 23-115) before proceeding with the troubleshooting.

1. Go into the Diagnostic mode, and do the Navi System Link diagnostic (see page 23-170), the Navi ECU diagnostic under "Unit Check" (see page 23-172), the Car Status check (see page 23-175), the GPS Information check (see page 23-177), the GPS Detail check (see page 23-177), and the Yaw Rate check (see page 23-178).

   *Are all the tests OK?*

   **YES**—The system is OK at this time. ■

   **NO**—Repair the affected system. If the problem persists, swap a known-good navigation unit, and monitor the condition. ■

Protected by AR



## Symptom Troubleshooting (cont'd)

### Navigation system will not accept security code

NOTE:
- The system will not operate without the 4-digit security (anti-theft) code. Follow the this procedure. (After 10 consecutive tries, you must cycle the key to continue trying)
- The "Navigation System Diagnosis and Core Return Form" is available on ISIS, under "Job aids" and can be printed out for recording this information. This information will help the Reman facility determine what caused the failure.

1. Go into the "System diagnosis menu" (see page 23-169), select "Unit check," and then "Navi ECU." A brief diagnostic will run for 20 seconds, and the serial number is then displayed.

   *Is the serial number displayed?*

   **YES**—Go to step 2.

   **NO**—Replace the navigation unit (see page 23-190). ■

2. Obtain the Serial Number (3 letters followed by 8 numbers) from the label on the underside of the navigation unit (not the display unit). Using the Serial Number, look up the navigation security code in the Interactive Network. (click: Service, Vehicle Information, Anti-Theft code Inquiry, and then select "Navigation" from the "product" dropdown box). Enter the serial number.

   *Is a 4-digit code displayed?*

   **YES**—Go to step 3.

   **NO**—Call the Warranty Department, the telephone number is listed in the PDI/TQI bulletin, to obtain the code. Then go to step 4.

3. Enter the navigation code.

   *Does the code work?*

   **YES**—The system is OK at this time. ■

   **NO**—Go to step 4.

4. Try entering four zeros (0000) in place for the code.

   *Do the four zeros work to bypass the code screen?*

   **YES**—Replace the control unit, and enter in the "problem description field" of the core return form: "Security code is 0000." ■

   **NO**—Replace the control unit, and enter in the "problem description field" of the core return form: "Won't take security code" (as proof, enclose the sticker that contains the Serial number and the Code). ■



BACK

Protected by AR

## Navigation stays on with ignition switch off

NOTE:
- Check for aftermarket accessories that may interfere with the navigation system.
- Always check the connectors for poor connections or loose terminals.
- Before troubleshooting, get the navigation system anti-theft codes.
- After troubleshooting, re-enter the anti-theft code, and re-initialize the navigation system.
- The vehicle may have been used for a show event. Check for a short jumper harness in-line with the navigation unit "C" connector. If a jumper harness is present, remove it and return it to Tech Line.

1. Take the key out of the ignition switch.

   *Does the navigation screen stay on?*

   **YES**—Go to step 2.

   **NO**—The system is OK at this time. ■

2. Check for battery voltage on navigation unit connector C (8P) terminal No. 2.

   *Is there battery voltage?*

   **YES**—Troubleshoot a short to battery voltage on the ACC circuit. ■

   **NO**—Replace the navigation unit (see page 23-190). ■

## Navigation cannot control audio/disc

**Diagnostic Test: Navi System Link**

1. Make sure the anti-theft code for the audio system is entered.

2. Go into the Diagnostic mode, and use the "Navi System Link" diagnostic (see page 23-170).

   *Is the "Radio" icon red?*

   **YES**—Do the troubleshooting for the voice guidance cannot be heard (see page 23-156). ■

   **NO**—Go to step 3.

3. Substitute a known-good navigation unit (see page 23-190), and recheck.

   *Can the navi control audio/disc?*

   **YES**—Replace the navigation unit (see page 23-190). ■

   **NO**—Do the audio system troubleshooting. ■

Protected by AR



## Symptom Troubleshooting (cont'd)

### Rearview camera does not come on or work properly

1. Turn the ignition switch ON (II), and start the engine.

   *Does the Navigation screen come on and show an image when the vehicle is started?*

   **YES**—Go to step 2.

   **NO**—Go to troubleshooting for "No picture is displayed" (see page 23-150).■

2. Go into the diagnostic menu and use the "Navi System Link" test (see page 23-170) to check the connection between the navigation unit and the rearview camera.

   *Is the "R-camera" link on the screen?*

   **YES**—Go to step 3.

   **NO**—Go to step 11.

3. Confirm the system connection.

   *Is the "R-camera" link red on the screen?*

   **YES**—Go to step 4.

   **NO**—Go to "Car Status" and check the BACK-Reverse indication status (see page 23-175).■

4. Check the connections between navigation unit connector G (7P) and the rearview camera connector (6P).

   *Are the connections OK?*

   **YES**—Go to step 5.

   **NO**—Reconnect the connectors.■

5. Disconnect navigation unit connector G (7P) and rearview camera connector (6P). Check for continuity

| Navigation unit connector | Rearview camera | Wire color |
|---|---|---|
| G1 | 6 | WHT |
| G2 | 5 | RED |
| G4 | 4 | YEL |
| G5 | 3 | BLK |
| G7 | 1 | GRN |
| G6 | 2 | GRY |

   *Is there continuity?*

   **YES**—Go to step 6.

   **NO**—Repair open in the wire between navigation unit connector G (7P) and rearview camera connector (6P).■

6. Check for continuity between navigation unit connector G (7P) and body ground according to the table. Then check for continuity between the navigation unit connector G (7P) terminal No. 6, rearview camera 6P connector terminal No.2 and same terminals.

| Navigation unit connector | Wire color |
|---|---|
| G1 | WHT |
| G2 | RED |
| G4 | YEL |
| G5 | BLK |
| G7 | GRN |

   *Is there continuity?*

   **YES**—Repair short in the wire between navigation unit and the rearview camera, or replace the appropriate shielded harness.■

   **NO**—Go to step 7.



BACK

Protected by AR

7. Turn the ignition switch ON (II), and measure the voltage between navigation unit connector G (7P) and body ground according to the table.

| Navigation unit connector | Wire color |
|---|---|
| G1 | WHT |
| G2 | RED |
| G4 | YEL |
| G5 | BLK |
| G7 | GRN |
| G6 | GRY |

*Is there 0.5 V or more?*

**YES**—Repair short to power in the wire between the navigation unit and the rearview camera, or replace the appropriate shielded harness. ■

**NO**—Go to step 8.

8. Turn the ignition switch OFF.

9. Reconnect the rearview camera connector (6P).

10. Substitute a known-good navigation unit and check the rearview camera image in reverse.

*Is the rearview image OK?*

**YES**—Replace the original navigation unit. ■

**NO**—Replace the rearview camera. ■

11. Press the "Return" in the upper right corner of the screen to return the main menu, then go to "Version" (see page 23-186).

12. Check the model code that is displayed.

*Is the correct navigation unit model code displayed for this vehicle?*

**YES**—Go to step 13.

**NO**—The wrong navigation unit is installed. Replace the navigation unit with the correct part. ■

13. Remove the DVD disc from the navigation unit and check the label color of the DVD disc.

*Is the DVD disc label white (or possibly gray for Canada)?*

**YES**—Reinsert the DVD disc, and go to step 4.

**NO**—Replace the DVD disc with the correct color. See the Obtaining a Navigation DVD in the "General Troubleshooting Information" (see page 23-115).

Protected by AR



## Symptom Troubleshooting (cont'd)

### Navigation cannot control XM radio

**Diagnostic Test: Navi System Link**

1. Make sure the anti-theft code for the audio system is entered.

2. Go into the Diagnostic mode, and use the "Navi System Link" diagnosis (see page 23-170).

   *Is the "XM" icon red?*

   **YES**—Do the troubleshooting for the voice guidance cannot be heard (see page 23-156). ■

   **NO**—Go to step 3.

3. Substitute a known-good navigation unit (see page 23-190).

   *Can the navi control XM radio?*

   **YES**—Replace the navigation unit (see page 23-190). ■

   **NO**—Replace the XM receiver. ■

### Navigation frequently asks for anti-theft code and needs GPS initialization

NOTE: This is often caused by a loss of battery power or a poor ground.

1. Check for an open on navigation unit connector C (8P) terminals No. 1, No. 2, and ground No. 4.

   *Are the circuits OK?*

   **YES**—Replace the navigation unit. ■

   **NO**—Repair the circuits. ■



BACK

Protected by AR

## Traffic information is not being shown on map screen

If your client complains that traffic is not being displayed, it could be because a traffic setting is not correct.

NOTE:
- The client's account must be active. Call XM customer care to verify the account status before troubleshooting.
- Currently, real-time traffic (display of traffic flow and/or incidents) is available in over 30 metropolitan areas, and it is likely to grow. The current list can be found at www.acura.com/realtimetraffic. The site also contains a traffic demo and FAQs.
- Traffic flow speed is displayed as bands of red, orange, and green alongside of the freeway. Some or all freeways in a covered city may not have traffic coverage. The link above shows the freeways covered for each city.
- Incident icons (yellow or red diamonds) point out accidents, construction areas, or weather conditions.
- Not all areas have "traffic flow" and "traffic icons." It is possible that an area may have one or the other.

Even if your area does not receive real-time traffic, complete the steps below to make sure the system is set up correctly.

1. Check if your area has real-time traffic coverage. From an iN workstation, go to www.acura.com.

2. Park the vehicle outside where you have a clear view of the southern sky. Turn on the XM radio, and make sure it receives at least channels 0, 1, and 247 (XM's preview mode).

   - If the XM radio gets at least channels 0, 1, and 247, go to step 5.
   - If the XM radio does not get at least channels 0, 1, and 247, troubleshoot the XM radio, repair as needed then go to step 5.

3. In the lower left corner of the navi map screen make sure the scale is set to 1/2, 1, 2,or 5 miles. (The scale must be set to one of these values to see real-time traffic). To change the scale, turn the interface knob left or right as needed.

   NOTE: Many AcuraLink functions are selected using the interface dial at the center of the dashboard. The interface dial has two parts a gray knob behind a silver selector. The knob turns left and right. The selector can be pushed left, right, up, down, and in.

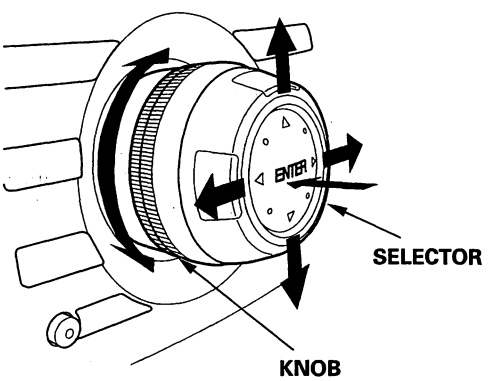


4. Check if the navi screen shows real-time traffic.

   - If you do not see real-time traffic, go to step 7.
   - If you see real-time traffic, or if you are not in an area that receives it, return the vehicle to your client.

5. Go into the map menu:

   - If you were using the interface selector to scroll on the map screen, press the MAP/GUIDE button.
   - Press the interface selection in.

(cont'd)

Protected by AR



## Symptom Troubleshooting (cont'd)

6. In the map menu. turn the interface knob to show icon on map, then press the interface selector in. The traffic icon on the far left should be solid blue. If it is not blue, turn the interface knob until the traffic icon is outlined in blue, then press the selector in, and go to step 10.

   If the traffic icon does not change to solid blue, do the AcuraLink self-diagnostic function (see page 23-197), then go to step 9.

7. Reset the AcuraLink control unit, then go to step 8:

   - With the ignition switch in the LOCK (0) position, pull the No. 23 (10 A) fuse from the under-hood fuse/relay box. Wait 20 seconds, then reinstall the fuse.
   - Enter the audio and navigation system anti-theft codes.

8. From the "map menu," go into icon options by pressing the interface selector to the right.

9. Turn the interface knob to traffic, then press the selector in.

10. Press the interface selector in to select traffic speeds. Turn the knob to traffic icons, and press the selector in again. Both traffic speeds and traffic icons must be solid blue. When both are solid blue, select done by pushing the selector to the right.

11. Check if the map screen shows real-time traffic.

    - If you do not see real-time traffic, go to step 14.
    - If you see real-time traffic, or if you are not in an area that receives it, return the vehicle to your client.

12. See if real-time traffic is currently being broadcast by checking real-time traffic on another RDX with a known-good navigation system. Wait about 5 minutes for the display screen to refresh.

    - If the other real-time traffic equipped vehicle displays real-time traffic, go to step 15.
    - If the other real-time traffic equipped vehicle does not display real-time traffic, call Acura Client Service at 800-382-2238 and ask about any known traffic system outages or blackouts in your area.

13. Reset the AcuraLink control unit

    - With the ignition switch in the LOCK (0) position, pull the No. 23 (10 A) fuse from the under-hood fuse/relay box. Wait 20 seconds, then reinstall the fuse.
    - Enter the audio and navigation system anti-theft codes.

14. Check if the map screen shows real-time traffic.

    - If you still do not see real-time traffic, go to step 17.
    - If you see real-time traffic, or if you are not in an area that receives it, return the vehicle to your client.

15. Make sure the vehicle's XM Navi Traffic account status is active.

    - Call XM at 800-852-9696.
    - From the automated menu, select 1 (dealers and retailers) and from the next menu, select 3 (technical support).
    - Ask the agent to check the XM Navi Traffic account status on the vehicle in question.
      - If the account is active and there are no known outages or blackouts, go to step 16.
      - If the account is inactive, get it activated, then ask for a rapid refresh. (A rapid refresh takes 15 to 30 minutes.)

16. Check if the map screen shows real-time traffic.

    - If you still do not see real-time traffic, go to step 17.
    - If you see real-time traffic, or if you are not in an area that receives it, return the vehicle to your client.

17. Install a known-good AcuraLink control unit (XM receiver), and check the real-time traffic.

    *Does the map screen show real-time traffic?*

    **YES**—Replace the AcuraLink control unit (XM receiver) and register it with XM radio and Acura client services.

    **NO**—Replace the navigation unit.



BACK

Protected by AR

# System Diagnostic Mode

## Start-up procedure and Diagnostic Menu

There are two ways to enter the diagnostic mode:

1. Connect the SCS service connector (see page 23-189) to the navigation service connector located behind the navigation unit. Then turn the ignition switch ON (II). The display will go directly to the diagnostic menu screen shown below.

   NOTE: When finished troubleshooting, make sure to remove the SCS service connector.

2. Turn the ignition switch ON (II). Use the navigation display hard buttons as described below:

   Make sure the battery is connected then press and hold the three buttons (Menu, Map/Guide, and Cancel), and keep them pressed for approximately 5 seconds. The display screen will go directly to the "Select Diagnosis Items" menu shown below.

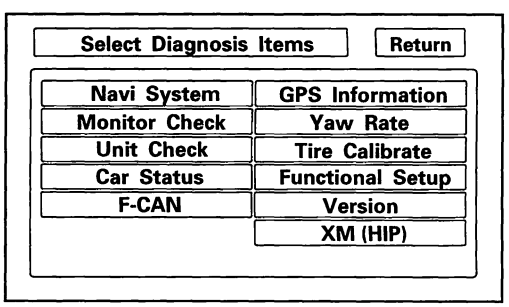


3. After the display changes to the Select Diagnosis Items menu, select the item you want to check and the diagnostic will start. To return to the previous screen, select "RETURN".

   - Navi System (Link)
   - Monitor Check
   - Unit Check
   - Car Status
   - F-CAN (System link)
   - GPS Information
   - Yaw Rate
   - Tire Calibrate
   - Functional Setup
   - Version
   - XM (HIP)

## Factory diagnostic screen "In Line Diag"

NOTE: If the vehicle left the factory in the factory diagnostic mode, you will see this screen every time you turn on the ignition.

When a navigation control unit is powered up for the first time at the factory or after replacement with a new or remanufactured navigation unit, the "factory diagnosis" screen (In Line Diag) shows up. Normally the factory performs the steps necessary to verify proper operation and terminate the "factory diagnostic".
Until the proper confirmation sequence is performed, the screen will show up every time the vehicle is started.

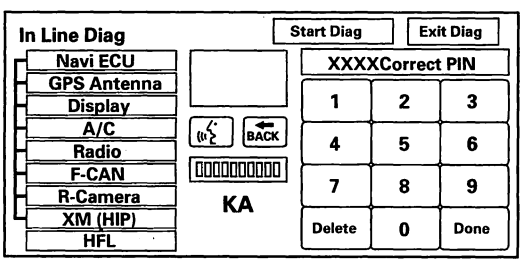


Follow the steps below to prevent the screen from showing up in the future:

- Press and hold the buttons (Menu + Map/Guide + Cancel) for about 5 seconds (the "Select Diagnosis items" screen will appear).
- Press and hold the Map/Guide button for 5—10 seconds (a screen with a "Complete" button, will appear).
- Touch "Complete," then "Return," and then shut the key off for 5 seconds. Do not disconnect the battery during this period as the unit is saving the setting to the SRAM memory. The In Line Diag should not appear again.
- Restart the vehicle, and confirm normal operation by completing the "TQI of the Navigation System" Service Bulletin.

(cont'd)

Protected by AR



## System Diagnostic Mode (cont'd)

### Navi System Link

- This diagnostic tests the cables connecting the navigation components. Ensure that the ignition switch is in the ON (II) position. When the diagnostic begins, you hear a "bong" sound. The system is in a "Detecting" mode, and is waiting for all items in white to be tested. This includes the navigation voice control (TALK/BACK) buttons, and microphone. Press the navigation TALK button on the steering wheel, and in a normal voice, say "testing." The TALK indicator on the screen should turn green, and the voice level indicator should move to at least the 6th bar to pass. Next, press the navigation BACK button. The "Cancel" indicator should turn green.
- If all of the communication lines connecting the system components, and the navigation TALK/BACK buttons/microphone check out OK (all block diagram items green), then the "OK" indicator turns green.
- If there is a problem with the system, the faulty system component items turn red, and the screen will show "NG" in red. Use the troubleshooting index, and other diagnostic screens to help locate the problem.
- The indication on the screen may not change until you cycle the ignition switch. After repairing the affected cable or system, repeat this diagnostic.

NOTE:
- Green boxes and green "OK" indicate that the communications lines (cables) are intact. This diagnostic does not necessarily imply that the individual components are functioning properly. For instance, the GPS antenna wire may be crushed, but still show as "green." A road test, or other diagnostic may be necessary to find the problem.
- A green box and link to the AcuraLink control unit (XM receiver) does not mean that the unit is receiving traffic information. Always verify that the client's account status is active, and compare to a known-good vehicle to ensure that there isn't a local coverage problem.

- Select "Return" to return to the Diagnosis Menu.

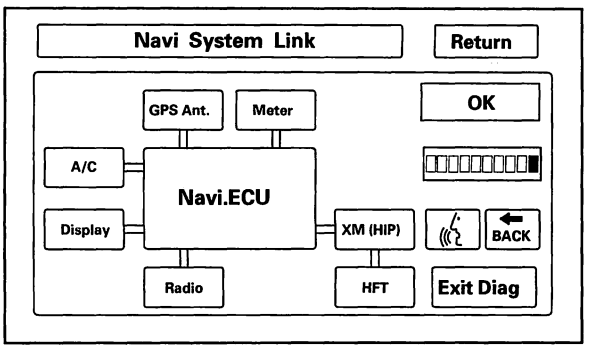


NOTE:
- The mic level indicator must reach the 6th bar or greater to pass the test.
- If the XM link is red or flashing red, go to audio system symptom troubleshooting (see page 23-45), or see XM (HIP) diagnostic screen.



BACK

Protected by AR

## Monitor Check

Overview of display unit

- The display unit communicates with the navigation unit over its own GA-Net bus. Information sent by the navigation unit to the display unit includes commands to control the LCD back light.
- The security system protects the navigation display unit by daisy-chaining the security signal through it, and then passing the signal to the audio unit.
- The illumination input from the gauge brightness control provides back lighting for the buttons surrounding the screen.

These screens allow you to troubleshoot the display unit. Select the item you want to troubleshoot, and follow the diagnostic instructions.

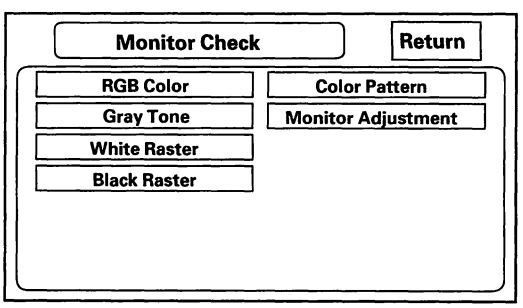


### RGB Color

This screen verifies that the display unit is receiving the video (R, G, B and Composite sync) signals properly. The three primary colors should all be shown without distortion. The combination of all three should produce a central white section. If any of the colors are missing, troubleshoot for the color signal (see page 23-152). If the picture has lines in it or scrolls horizontally, or vertically, troubleshoot for a Composite sync problem (see page 23-153).

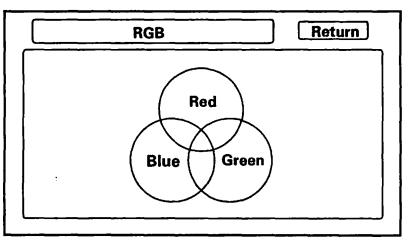


### Gray Tone

This screen diagnoses problems with contrast. You should be able to see the changes from bar to bar across the scale. It is normal for the two bars on either side to appear the same.

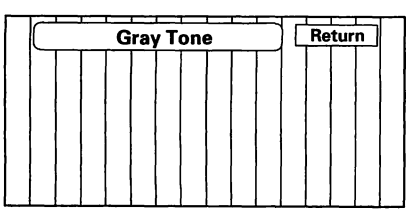


### White Raster

The entire display must be white.

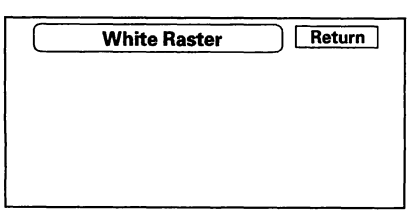


(cont'd)

Protected by AR



## System Diagnostic Mode (cont'd)

**Black Raster**
The entire display must be black.

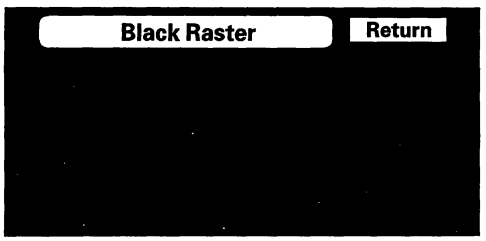


**Color Pattern**
The chart below shows the colors being used for the map and menu screens. This is for factory use only. To check the color signal use the "RGB Color" diagnostic found under the Monitor Check.

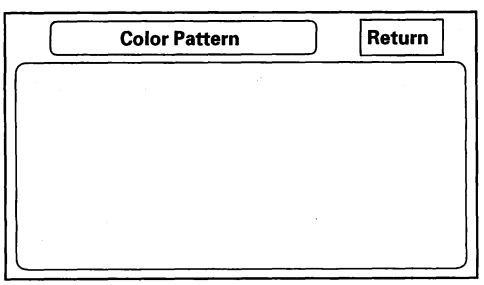


**Monitor Adjustment**
This allows you to center the navigation display. Use the joystick to move the picture up/down or left/right. It is unlikely that you will ever need to adjust the monitor position. The "Default" button will reset the display position to factory specifications.

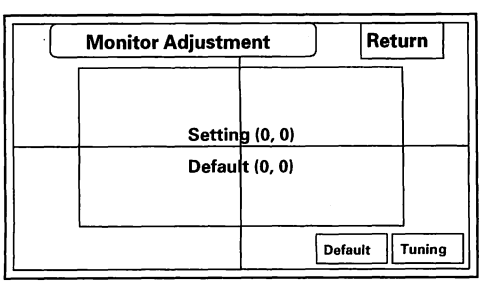


### Unit Check

To start the test, select the item you want to check.

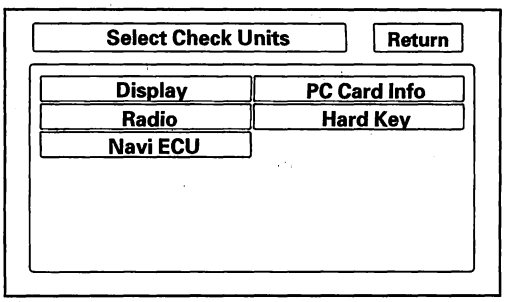




BACK

Protected by AR

**Display**
This diagnostic performs additional checks on the communication bus between the control unit and the display. In addition, the internal electronics functionality are confirmed.

- When the connection is NG, first check for loose terminals at the navigation unit and the display unit connections. Next check for an open or short in the communication line between the navigation unit and the display unit. If you find the line has an open or short, replace the affected shielded harness.
- If the ROM or RAM is NG, replace the display unit.
- The version represents the software version in the display.

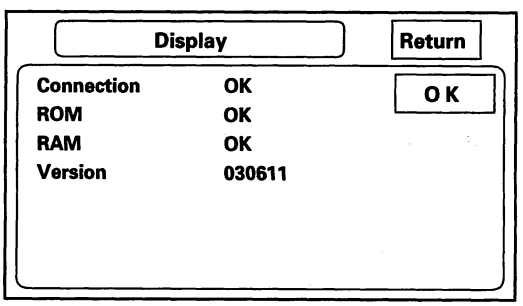


**Radio**
If the NG is indicated, check for loose audio unit connector.

NOTE: If the XM link was displayed red, but the radio link was displayed green in the navigation system link, refer to audio system symptom troubleshooting.

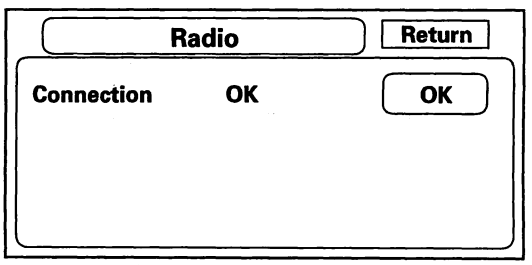


(cont'd)

Protected by AR



## System Diagnostic Mode (cont'd)

**Navi ECU**
This screen looks for problems the navigation unit. When you initiate this diagnosis, the navigation unit may delay up to a minute while the diagnosis runs.

NOTE: Do not try to end this diagnostic by pressing "OK" or "Mem clear" before it finishes, otherwise the system may reboot.

- If "V-RAM" or "D-RAM" is NG, then replace the navigation unit.
- If "GPS" indicates "NG (ANT)," then check the entire GPS antenna wire from the navigation unit to the antenna. If the wire is crushed or damaged, try a known good antenna. If this diagnostic reads OK, then order a new GPS antenna. If the diagnostic still reads NG (ANT), then replace the navigation unit.
- "DVD ROM" represents the database version on the DVD. You can find this information in either the Setup Screen "Version," or in the Diagnostic Screen "Version."
- "Serial No." should be the same as the serial number found on the underside of the navigation unit. You need this number to obtain the security code from the Interactive Network (iN) system.
- The Mem Clr is for factory use and should not be used unless instructed by the factory.
  Selecting this will erase the client's settings, personal information, GPS orbital data, and anything else stored in memory.

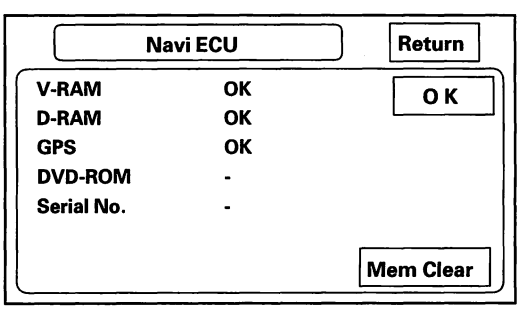


**PC Card info.**
There is no PC Card in the PC slot, and the screen should say, "PC Card is not inserted."

NOTE: Do not insert any card or object into the slot.

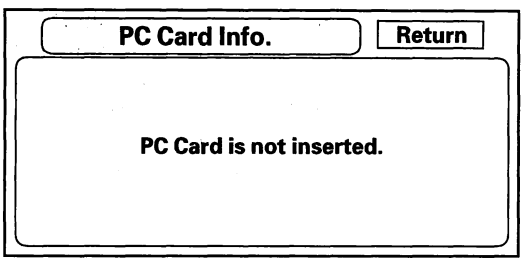


If the factory provides a PC card and instructs you to insert a card, then the screen displays the Manufacturer, and Product Name as shown in the following screen.

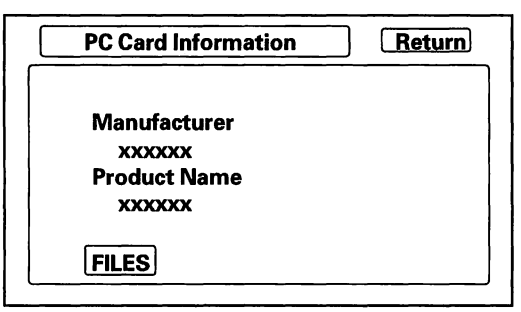




BACK

Protected by AR

**Hard Key**
This diagnostic tests the interface dial, and the buttons that surround it. For this model, the interface dial and buttons do not use the GA-Net bus for communications.

To complete the test, touch each button or the vehicle's control panel, and move the interface dial to each indicated position. As each function is tested, the corresponding button on the display should highlight. To exit, push in and hold the selector knob.

NOTE: You cannot use the onscreen return button to exit this function

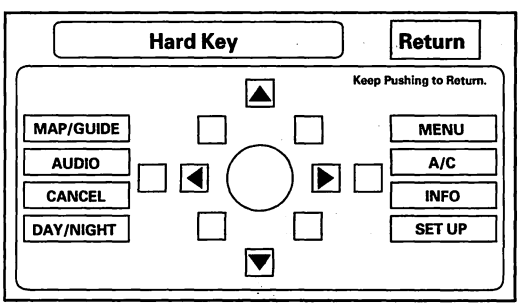


## Car Status

Use this screen to confirm that navigation unit is properly receiving input signals. Signals equal to (0) are OFF, and signals equal to (1) are ON. If the value on the display does not match the actual vehicle status, then check the wire carrying the signal.

- VSP-Vehicle Speed Pulse from PCM
  (Pin 6 of C-connector)
  a) OFF (0) when vehicle is not moving
  b) ON (1) when vehicle is moving

The VSP comes from the PCM as a dedicated signal. Internally, the navigation unit compares the actual VP on the map against street data to adjust the pulse to speed scaling factor. As this scaling factor becomes more accurate, the "Level" gradually increases from 0 to 10 (see the Tire Calibrate diagnostic screen).

- BACK-Reverse indication from taillight relay
  (Pin 5 of C-connector)
  a) OFF (0) when the shift lever is in any position other than reverse
  b) ON (1) when the shift lever is in reverse

The Back signal is used by the navigation unit to allow the map screen to show the VP moving backwards when in reverse. This signal is needed because the Speed Pulse has no direction indication.

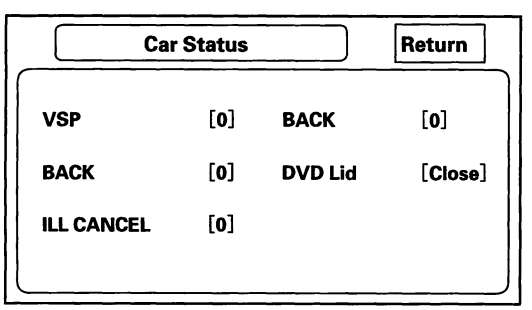


(cont'd)

Protected by AR



## System Diagnostic Mode (cont'd)

ILL CANCEL
This item detects whether the "illumination cancel" function is in use.
a) OFF (0) if illumination cancel is not selected
b) ON (1) if illumination cancel is activated

The illumination cancel function is activated by increasing the dash brightness to "MAX" using the "+" button. The CAN bus passes this information from the gauge assembly to the navigation control unit.

NOTE: This setting is unaffected by the "display mode" hard button located below and to the left of the interface dial.

- ILL-Illumination Indication
  (Pin 5 of navigation unit A-connector)
  a) OFF (0) when parking lights, or headlights are off
  b) ON (1) when parking lights, or headlights are on

The navigation uses the signal to determine whether to put the navigation screen into the Day or Night brightness mode. (Setup screen 1)

- DVD Lid-senses if the DVD door is open
  a) (Close) when the door is closed
  b) (Open) when the door is open

The navigation unit has a micro switch to detect this. If open is indicated when the door is closed, replace the navigation unit.

### F-CAN System Link

F-CAN (Fast Controller Area Network) passes information between processors on the network. For example, the F-CAN network is used to pass charging system signals between the PCM and the navigation unit for the trip computer cooling fan function. The F-CAN network uses a communication protocol that transmits data at 500 Kbps.

- If the diagnostic screen below reads NG with the ignition switch ON (II), then diagnostic trouble codes (DTCs) for the F-CAN can be retrieved with the HDS (Honda Diagnostic System). The data displayed in the ID boxes is irrelevant.
- For more details on troubleshooting the F-CAN, refer to the multiplex system.

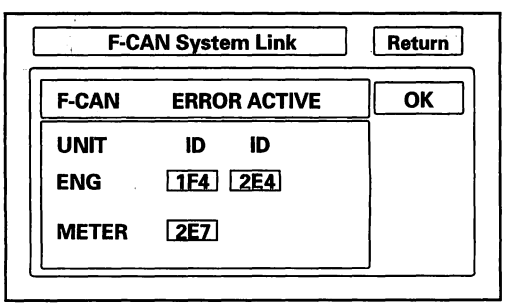




BACK

Protected by AR

## GPS Information

This screen shows the current status of GPS reception. The circular diagram shows the current location of the GPS satellites (yellow numbers) as they would appear in the sky. The outer circle represents the horizon (0 degrees elevation). The middle and inner circles represents 30 and 60 degrees respectively. The very center of the diagram (90 degrees elevation) is directly overhead. Nearby obstructions, like tall buildings will block satellites in that direction. That is why it is necessary to be in an open area to effectively troubleshoot GPS reception issues. The satellite numbers shown on the diagram correspond to the "PRN" number in the "GPS Details" screen. There are always at least 24 "active" GPS satellites in orbit. Because satellites fail, and have to be removed from service, spares are always parked in orbit, ready to be activated. This is why the PRN (satellite ID number) can be greater than 24.

NOTE: To use this screen for troubleshooting, the vehicle should be outside away from buildings, tall trees, and high-tension wires for at least 10 minutes with the engine running.

- The "Number of Satellites" box shows the number of acquired satellites (maximum of 12). It should contain three or more icons. If not troubleshoot for "GPS icon is white or not shown" (see page 23-156).
- The "Current Position" shows latitude, longitude, and elevation (in feet). If there are less than four satellites, the elevation can be grossly inaccurate.
- The Date/Time field shows the current date, and also a time that includes daylight savings and other offsets entered by the client in Setup screen 2 "Adjust Time Zone/Clock."

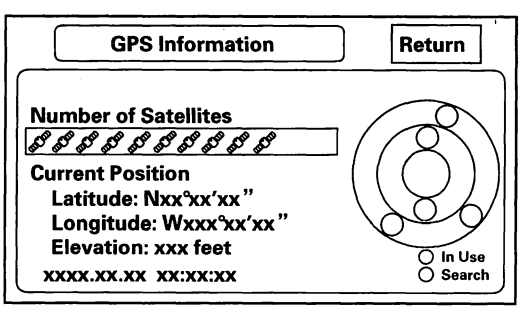


NOTE: Pressing the "map guide" button displays the satellite number on each circle.

## GPS Detail

By pressing and holding the MENU button for 10 seconds, a GPS Detail screen appears. This screen displays real time incoming satellite positional data when the vehicle is outside in the open. The information shown on this screen is for factory use.

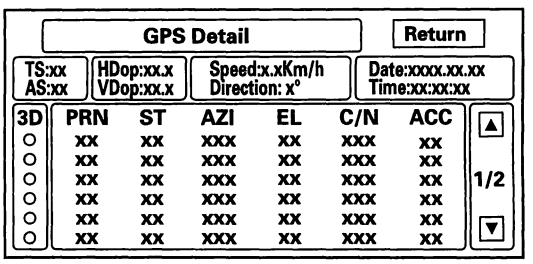


- The box TS/AS and H Dop/V Dop is for factory use.
- The Speed and Direction information is updated in real time when driving.
- The Date/Time Information is the same as in Setup screen 2 "Adjust Time Zone/Clock."
- If the "3D" icon is shown above the yellow dots, this implies that at least four satellites are available for map positioning, and the "GPS" indicator on the map screen will be green. See the "Global Positioning System" detailed explanation in the "System Description".
- If the row of data in the table below begins with a "yellow dot", the AZI and EL fields can be used to locate each satellite on the circular GPS diagram (see prior screen).

(cont'd)

Protected by AR



## System Diagnostic Mode (cont'd)

NOTE: The data shown in the GPS Detail screen is an example only.

The table of values shown on the screen below has the following columns:

| Column | Description | Problem indication |
|---|---|---|
| Active | Active satellites (Yellow Dot) | If "3D" or "2D" is missing when the vehicle is parked outside, follow GPS icon is white or not shown troubleshooting (see page 23-156). |
| PRN | The satellite ID number | |
| ST | The status: 0 = cannot view or searching, 2 = acquiring | If all 0, then, follow GPS icon is white or not shown troubleshooting (see page 23-156). |
| AZI | Azimuth, the angle (0—360) clockwise from north | |
| EL | Elevation from the horizon (90 deg is overhead) | |
| C/N | N/A | Normal signal is 49-52, no signal: 27-33 |
| ACC | N/A | |
| △ 1/2 or 2/2 ▽ | Shows view of all satellites in two screen views 1/2 or 2/2 | |

### Yaw Rate

This diagnostic checks the yaw rate sensor in the control unit. This device detects when the vehicle turns, and repositions the vehicle position icon on the map screen. For more detailed information, see the yaw rate sensor theory of operation under "System Description" (see page 23-123).

- "Sensor" indicates the voltage output from the yaw rate sensor. It should indicate about 2.500 V when stopped.
- "Offset" is the reference voltage or standard within the yaw rate sensor. It also should indicate about 2.500 V when stopped.
- A "sensor" output voltage LOWER than the "Offset" voltage indicates that the vehicle is turning to the right.
  A "sensor" output voltage HIGHER than the "Offset" voltage indicates that the vehicle is turning to the left.
- The yaw rate offset, and sensor should both indicate about 2.500 V when stopped. If either reads zero, or 5.000 V, replace the navigation unit.
- The yaw rate offset and sensor should be within +/—0.01 V of each other when stopped. The sensor value should change relative to the offset as the car is turned while driving. If not, replace the navigation unit.

**Example: Car stopped**

| **Normal** | | **Abnormal** | |
|---|---|---|---|
| Offset | 2.526 V | Offset | 2.526 V |
| Sensor | 2.516—2.536 V | Sensor | 2.623 V |

**Example: Car turning**

| **Normal** | | **Abnormal** | |
|---|---|---|---|
| Offset | 2.526 V | Offset | 2.526 V |
| Sensor | 2.678 V (left turn) 2.478 V (right turn) | Sensor | 2.623 V (no change on turns) |



BACK

Protected by AR

- "Sensitivity study" represents the status of the internal tuning function. At initialization, this value starts at 6 and increases to #10 as the internal correction values become more accurate.
- The settings "CCW Cal Factor," "CW Cal Factor," and "Set" are for factory use only. THIS SHOULD NEVER BE ADJUSTED.
- For detailed analysis of the yaw rate select "tuning."

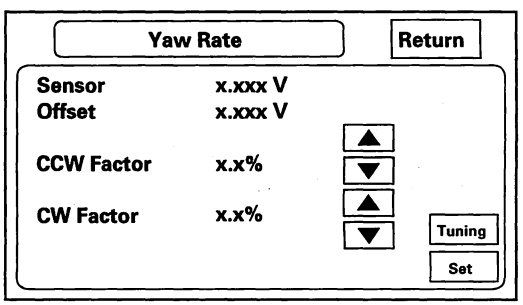


## Yaw Rate Tuning

This diagnostic allows you to graphically display problems with the yaw rate sensor.

- The "ANG-Disp" value accumulates any differences between the "offset," and "sensor" voltages (see Yaw Rate diagnostic). When the sensor is healthy, the random changes in these two voltages generally cancels out, so the value is 0. However if one voltage is consistently higher than the other, then the "ANG-Disp" value accumulates the constant change.
- The "Reset" button temporarily clears the angular accumulation (ANG-Disp), and clears the display dots.
- Do not touch the "CCW," "CW," or "Set" buttons. These are used for factory setup only.

Two tests are explained below. For gross problems with the sensor, the stationary test usually confirms whether the sensor is defective. For yaw rate issues related to driving, perform the road test described below.

1. Stationary test: If the "VP" icon spins in place and the "ANG-Disp" value slowly increases or decreases in value, the yaw rate sensor is defective. Replace the navigation control unit.

2. Road test: Drive the vehicle on a very straight road. Enter the diagnostic mode, select "Yaw rate," and touch the "Tuning" button. While driving down a straight road, the white "dots" should trace a straight line across the screen. However, if you are driving on a straight road, and you notice the dots constantly dropping down or heading up as you drive, the navigation control unit's yaw sensor is defective. You can touch "Reset" to clear "ANG-Disp," and dotted lines.

   If either test above fails, please enter "Yaw rate sensor defective" for the problem description, on the "Navigation core return form."

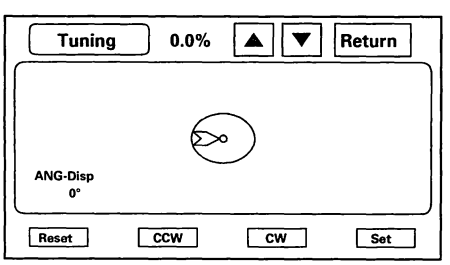


(cont'd)

Protected by AR



## System Diagnostic Mode (cont'd)

### Tire Calibrate

As the vehicle moves, the navigation system receives speed pulses from the PCM. These pulses are converted using a conversion factor to a mph speed that moves the vehicle position (VP) on the map. The navigation system has an internal tuning function that generates and refines this factor based on actual driving. The "Study" indicates the status of the tuning. At navigation initialization, it begins at 0, and increases to 10 as the navigation system is used.

- The "Auto Tuning" is factory set to "ON," and should remain on.
- The "Study" indicates the tuning status. If it is less than 10, the unit is still calibrating.
- The "Tire-Cal. Tuning" and Set should not be used. It is for factory use only.

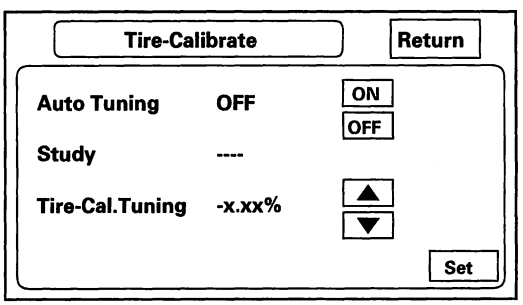


### Functional Setup

Select the item you want to check.

- Log Data
- Mic Level
- GPS Send Time
- Solar Angle
- Demo Mode
- Save Users Memory

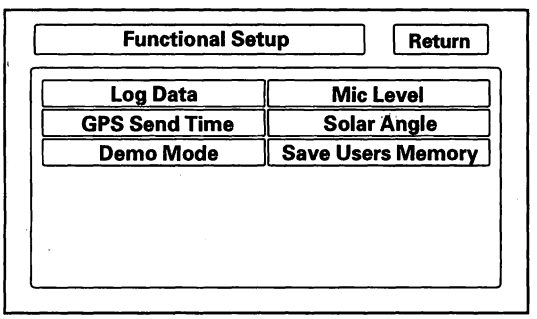




BACK

Protected by AR

**Log Data**
This screen allows the factory to select log data to troubleshoot navigation system issues.

- Normally there is no card in the "PC Card Slot," and the PC slot door should always be closed. The screen should look like below.

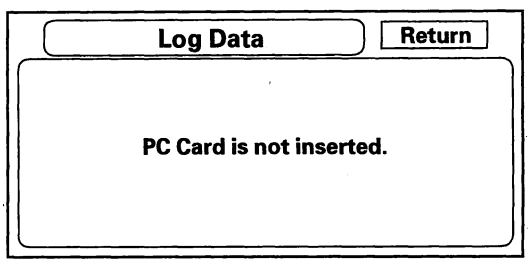


- However, if the factory provides a PC card and instructs you to insert it into the card slot (label side up). If instructed by the factory, select "Gyro. Sensor Logs ON." Follow the factory procedure for gathering test data, and properly ending the test.

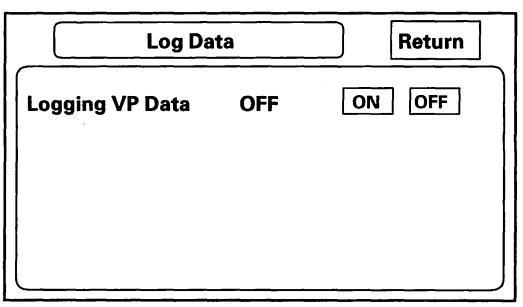


**Send GPS Time**
This screen is for factory use only. It allows adjustment of the GPS time. This display updates in real time.

- "GPS Time" is the time as received from the GPS satellites. It is in Greenwich Mean Time (GMT).
- Date, Hour, Minute, and "Set" should not be used.

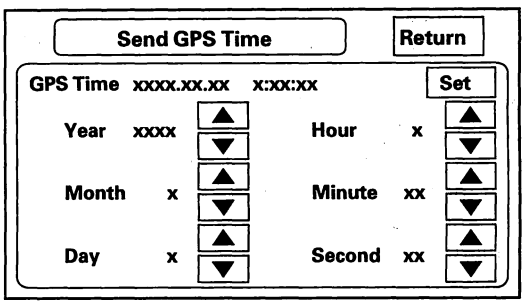


**Demo Mode**
This screen is for factory use only, and should always be set to "OFF." Occasionally "DEMO" setting is turned "ON" when vehicles are being used at Auto Shows or similar events. Turning this feature on, allows the navigation system to automatically follow a route to a destination when the vehicle is stationary. The "Speed" can change the speed of the demo mode.

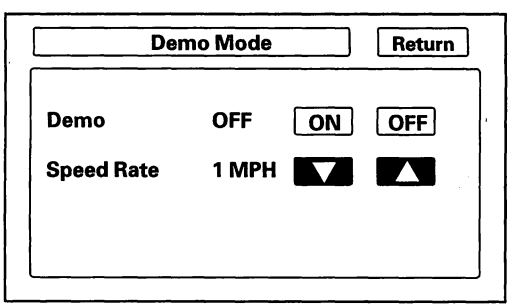


(cont'd)

Protected by AR



## System Diagnostic Mode (cont'd)

**Mic Level**
This diagnostic allows you to independently test the microphone and the navigation TALK and BACK buttons. They are used to activate the voice control system. The microphone is located near the map light in the roof console. It is directional, and works best with the voice coming from the drivers seat.

- Press the TALK button on the steering wheel, and in a normal voice say "testing." The TALK indicator on the screen should momentarily turn green, and the text "Now Recording..." should appear in yellow. In addition, the Mic Level indicator shown on the screen does not briefly turn green, then check the wiring from the steering wheel talk button to the navigation unit. If there is no "Mic Level" movement when you speak, then you should check the wires running from the microphone in the roof console to the HandsFreeLink control unit and the navigation unit. If the wires are OK, the microphone must be faulty; replace the roof console (see page 22-196).
- Press the BACK button on the steering wheel. This should cause the Cancel indicator on the screen to momentarily turn green. If it does not briefly turn green, check the wiring from the steering wheel BACK button to the navigation unit.

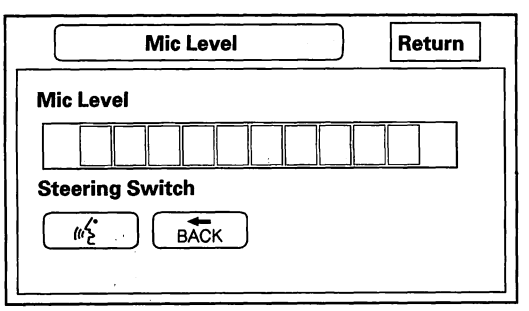


**Solar Angle**
This screen is used to graphically display a sun's position as determined by GPS. The HVAC system uses the navigation systems sun's angle, along with the sunlight sensor to control the driver/passenger A/C air flow. The heat that the climate control unit removes varies, depending on the angle of the sun entering the vehicle. This screen is for factory use only, and should not be adjusted.

- The screen shows a circular diagram of the sky oriented in the direction that the vehicle is pointing. During daylight hours a red dot is shown, representing the direction and elevation of the sun. The outer circle represents the horizon (0 degrees elevation). The middle circle is 30 degrees, the center circle is 60 degrees, and the very center is directly overhead (90 degrees).
- The "manual tuning" button should always be "OFF."
- The "Angle" is the angle that the sun (shown with red "dot") is above the horizon.
- The "vehicle" value represents the angle, clockwise from North, to the direction that the vehicle position (VP) icon is pointing (always points straight up).
- The "direction" value is the angle, measured clockwise from the VP (straight up) to the suns position.
- The reliability ranges from 1 to 3, and represents the accuracy of the Vehicle Position relative to the sun.

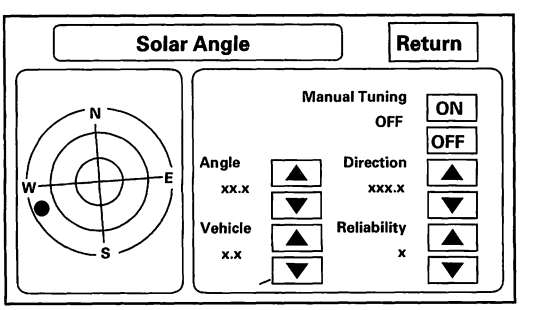




BACK

Protected by AR

## Save Users Memory

When replacing the navigation unit, this function allows the dealer to transfer the customer's personal data to the new navigation unit. The transferred information includes their Setup settings, and personal addresses. The dealer inserts a PC card to the navigation unit, and then selects the "Save Users Memory" function. The two functions in this diagnostic screen are EXPORT and IMPORT. EXPORT saves the customer's data to the PC card, and IMPORT moves the PC card files to the new navigation unit.

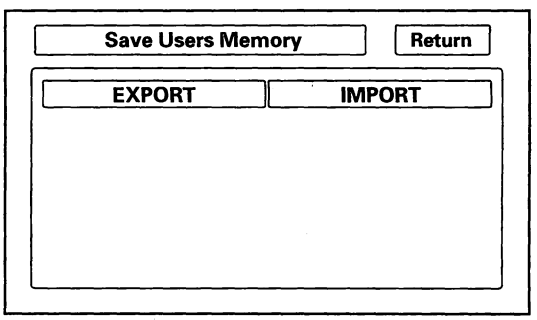


Before starting this function, see the PC Card FAQs for information regarding PC cards, and the use of this function.

1. Select EXPORT button to move the customer's data from the original navigation unit to the PC card. Select "YES" on the "Export User Data" Confirmation screen. The process takes only a couple of seconds. The system stores two files on the card.

   NOTE: If the EXPORT button is grayed out, check the PC card's edge connector, and the pins inside the navigation unit (with a flashlight) for damage.

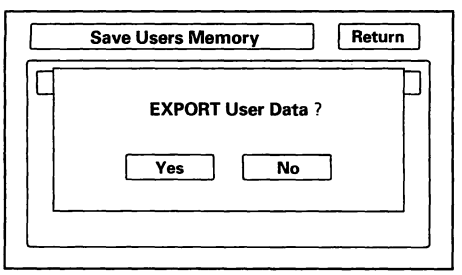


2. After installing the customer's original DVD in the new navigation unit, allow the system to boot up. Insert the PC card in the new navigation unit and enter the "Save Users Memory" in the navigation system diagnostic mode.

3. Select IMPORT button to move the two files stored by the Export process from the PC card to the new navigation unit. Select "YES" on the "Import User Data" Confirmation screen. When the transfer is finished (a few seconds) the system will automatically reboot. After the system reboots, remove the PC card from the PC slot.

   NOTE: If the IMPORT button is grayed out, check if the "Model" and the "Program Flash" shown on the "Version" screen are the same.

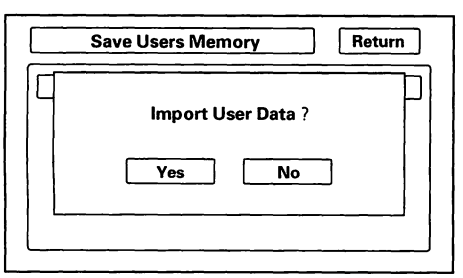


(cont'd)

Protected by AR



## System Diagnostic Mode (cont'd)

### PC Card FAQs

| Question | Answer |
|---|---|
| Where do we buy the flash memory or adaptors, and what do we ask for? | You need a "PCMCIA type II" adaptor and a flash memory chip. They can be purchased at a computer, or office supply store. The card will have the same size and shape as the PC card in the HDS. Adaptors that accept multiple flash types are not recommended. |
| What memory flash chips will work with what adaptors? | The flash memory devices that have been tested include Compact Flash (CF), and ATA style (like the card in the HDS). Other card types and flash memory chips may work, but have not been tested. |
| What capacity card do I need for this function? | A memory chip with capacity of 64 MB to 2 GB will work. The two files moved to the PC card during "export" are less than a Megabyte in size. |
| Should the dealer have a dedicated PC card for the Export and Import navigation function? | Yes, treat the PC card as a dedicated "special tool" that should be used anytime your '07 or later customer needs their navigation personal files transferred to a new navigation unit. |
| What device can I use to maintain the PC card, and delete files | Any computer store sells USB style card readers that accept the PC card, and allow you to perform file maintenance on your PC card. Most laptops will also accept the PC card. |
| Can we move the client's data to different models? | No, the files are model specific and will only load into a navigation unit with the same part number. |
| Can we move the client's data to the same vehicle with a different software version? | The client's files can only be transferred to a new navigation unit, if the "Model" and the "Program Flash" shown on the "Version" screen are the same. Files cannot be transferred to the different model and different versions. |
| Will other files on the PC card like images or music files prevent the Export/Import function from working? | No, the system simply adds two small files that are recognized by the new navigation unit when performing the import function. However, it the PC card is full, the "Export" function won't work correctly. |
| Do I have to delete the files on the PC card after each transfer of the client's data? | After the transfer of client data to the new navigation unit, the files remain on the PC card. Since this is confidential information, we recommend that you delete these files after each use. Please note that each time you export navigation files of the same model and version, the files are overwritten. Over time the PC card will accumulate two files for each version of the 8 or so Honda navigation models. |
| What format should be used if the PC card needs reformatting? | It is unlikely that the PC card will ever need formatting, however the FAT file system should be used. |
| I can't enter the navigation diagnostic mode to do the Export/Import function. How can I transfer the client's data? | Some internal navigation unit ECU failures may make it impossible to use the Export/Import function. |



BACK

Protected by AR

| Question | Answer |
|---|---|
| Why wont the Export or Import functions work? What do I check as part of troubleshooting? | • The card may not be fully inserted into the slot. Eject the PC card, and inspect for warping or damage to the edge connector. Never use excessive force to insert a PC card. This can result in damage to the pins in the rear of the slot.<br>• The PC card may not contain files that are recognized by the new navigation unit. Navigation data can only be transferred between navigation units with the same "Model code", and with the same navi "Program flash" version.<br>• The flash memory chip type may not be accepted by the system. Only Compact Flash and ATA cards have been tested.<br>• The card's PCMCIA adaptor may be preventing a known-good PC card from playing. Avoid multi slot type PCMCIA adaptors that accept several different flash memory types.<br>• The card may be full and as a result the files are stored, but without any data. Export and import appear to function, but move nothing. Delete unused files from the PC card.<br>• There may not be any files on the PC card. If the PC card has a "write protection" switch, make sure it is turned off before attempting to use the Export function.<br>• Although flash memory chips are reliable, occasionally they develop bad sectors or other formatting errors that prevents them from accepting files. The PC card should be reformatted using the FAT format.<br>• The PC card may have been formatting using the format "NTFS". Only the "FAT" format is accepted by the system.<br>• Hard Disc Drive (HDD) cards may not work properly in the system and can overheat or quit functioning, particularly in a hot vehicle. They are not recommended.<br>• Before performing the Import function, ensure that the client's original DVD is loaded into the new navigation unit and working properly. |

(cont'd)

Protected by AR



## System Diagnostic Mode (cont'd)

### Version

This screen displays the current version information for the navigation system software. In addition, this screen allows the loading of updated software if requested by the factory, or instructed by a Service Bulletin. Software may be loaded from a CD or a PC card.

- Program Flash: Displays the version of the navi software in memory.
- Program Disc: If displayed, this value represents the version of the navi software on the navi DVD.

  NOTE: The last two letters of the Program "Flash" or DVD fields indicate which DVD is installed in the unit. The letters "KA" imply that a "United States" DVD is installed. If the letters are KC, then a "Canada" DVD is installed. (See coverage discussion below.)

- IPL, APL, DBOOT, and System uCom, are all for factory use.
- Model: For this model, the field should begin with "STK."
- Download: Do not touch, unless instructed by the factory.

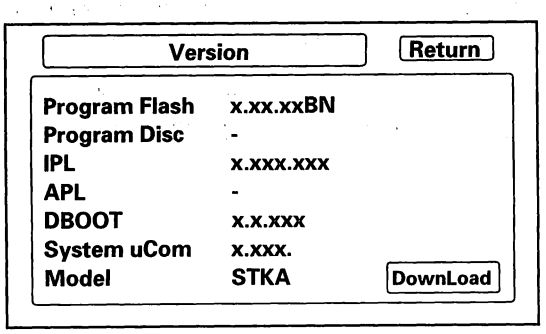


There are two navigation DVDs produced for this model.

- The white DVD labeled "United States" is for the US market and contains maps for the contiguous 48 US states, and some southern portions of Canada. Clients wanting additional northern coverage in Canada, can purchase a "Canada," DVD by contacting the DVD fulfillment desk.
- The gray DVD labeled "Canada," is for the Canada market, and contains maps for all of Canada, plus some of the northern US states. If clients with this DVD require full US coverage (including states like Florida and Texas), they may purchase a "United States" DVD by contacting the DVD fulfillment desk.

### XM (HIP)

These screens allow troubleshooting on XM or HIP (AcuraLink) problems. Select the item you want to troubleshoot, and follow the diagnostic instructions.

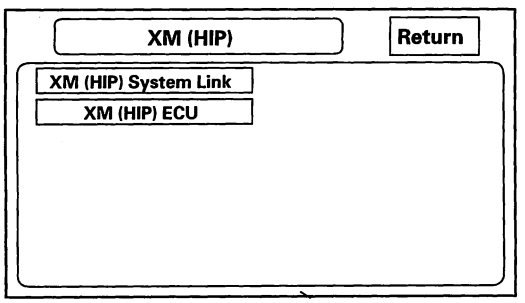




BACK

Protected by AR

**XM (HIP) System Link**
This diagnostic tests the cables connecting the XM (HIP) components.

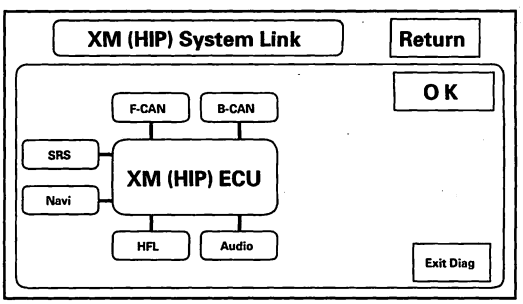


**XM (HIP) ECU**
Select the item you want to troubleshoot, and follow the diagnostic instructions.

NOTE: Only select "DATA RESET" when instructed. Selecting "DATA RESET" will clear the AcuraLink registration, and the AcuraLink service will reset to the factory default. If the vehicle was already registered for the AcuraLink service, it will have to be reactivated by calling Acura Client Services before all features will be available. The reactivation will cause the Feature Guide to start over at the first message, which will result in the client getting repeated messages.

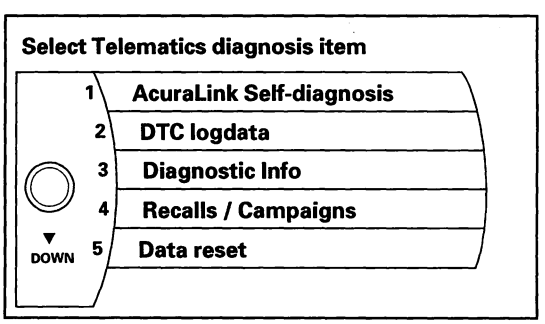


**AcuraLink Self-diagnosis**
This screen used to do self-diagnosis for the XM (HIP). Toggle the jog dial left to exit the screen.

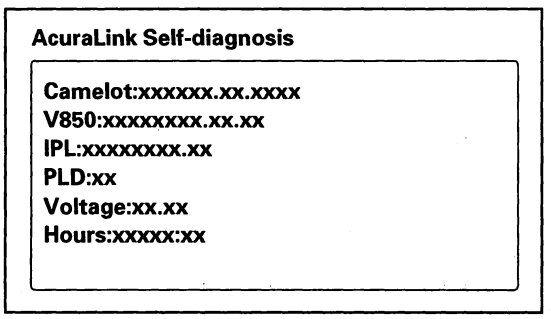


**DTC Log Data**
You can check the DTC log data in this screen. Toggle the jog dial left to exit the screen.

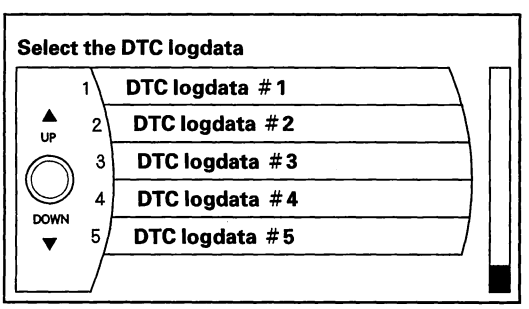


NOTE: When DTC B2200-B2249 is displayed, it is in engineering mode and is not for trouble diagnosis.

(cont'd)

Protected by AR



## System Diagnostic Mode (cont'd)

### Error Message Table

| Screen Error Message | Solution |
|---|---|
| Navigation system is unable to acquire a proper GPS signal. | Make sure there is nothing on the dashboard blocking the GPS antenna.<br>If not, move the vehicle to an open space away from tall buildings, trees, etc.<br>Window tinting and after-market devices can affect the GPS reception. |
| Navigation unit door is open or No DVD disc installed. Please check system. | Make sure the navigation DVD is the correct color and is not scratched or damaged. Make sure it is installed with the label side up and the navigation unit door is snapped fully closed. |
| PC card slot door is open. Please check system. | Make sure that the sliding door for the PC card is fully closed and that there is no PC card installed. |
| No DVD disc, please check system. | Check that the navigation DVD is installed with the label side up. |
| Display temp is too high. System will shut down until display cools down. | This message will appear briefly when the display temperature is too high, and then the display will turn off until the temperature cools down. The system will turn back on when the display cools down. |
| Outside temperature is low, system will take a while to start up. | The temperature is below —22 °F (—30 °C)and the navigation unit has difficulties reading the DVD. The system will start up when the temperature warms up. |
| DVD disc reading error (unformatted), please consult your dealer. | Check the DVD for the correct color and software version. Also check for deep scratches or other damage. Make sure you are using an official Honda navigation DVD (white in color). The system cannot read other mapping databases or video DVDs. If the problem persists, see your dealer. |
| Route has not been completed. Please try again from a different location. | Routing to or from a place (new area) that is not in the database. Try planning a different route to or from a different location that is clearly displayed on the map (map matched). |
| No alternate route found. Original route will be guided. | No alternate route method was found. The original route method will be used. |
| This destination cannot be found in database. | The destination was not found in the database. Try another destination nearby, or select the destination with the joystick. |



BACK

Protected by AR

## Forced Starting of Display

**Special Tools Required**
SCS service connector 07PAZ-0010100

1. Remove the passenger's console trim (see page 20-92).

2. Turn the ignition switch OFF.

3. Connect the SCS service connector (A) to the navigation service connector (B) located behind of the navigation unit.

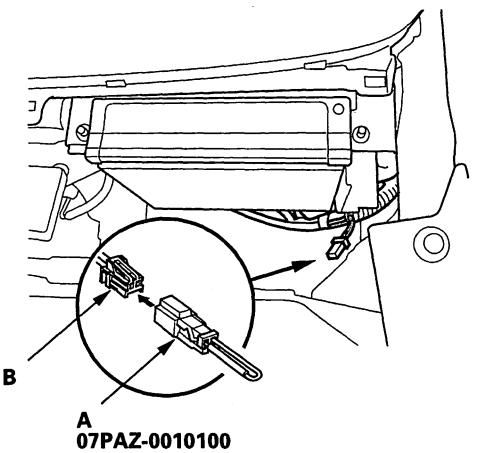


4. Turn the ignition switch ON (II).

5. Check that the diagnosis menu for the picture diagnosis starts up, and then changes to the system link menu.

   NOTE: If the display fails to display the system link screen, refer to no picture is displayed troubleshooting (see page 23-150).

## DVD-ROM Replacement

NOTE: When the DVD-ROM is re-inserted or replaced, a map match must be done (see page 23-115). This system uses a white labeled DVD (possibly gray for Canada).

1. Remove the passenger's console trim (see page 20-92).

2. Turn the ignition switch ON (II).

3. Push the open button (A) located on the right side of the navigation unit.

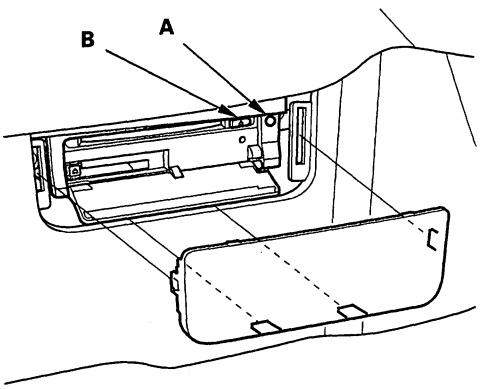


4. Press the EJECT button (B).

5. Remove the DVD-ROM.

6. Insert the new DVD-ROM with the white label facing up.

7. Close the front cover. Do not turn the ignition switch OFF; watch the navigation screen until the data is down loaded to the navigation unit.

   NOTE: After servicing, the front cover and PC card slot door must be closed. If you start up the navigation system with the front cover or PC card slot door open, the display will indicate an error message.

Protected by AR



## Navigation Unit Removal/ Installation

NOTE:
- If possible, have the client record any personal information from the navigation system that will be lost.
- If the navigation unit is replaced or disconnected, a Map Match must be done (see page 23-115).

1. Remove the DVD-ROM (see page 23-189).
2. Remove the nuts, then pull out the navigation unit (A).

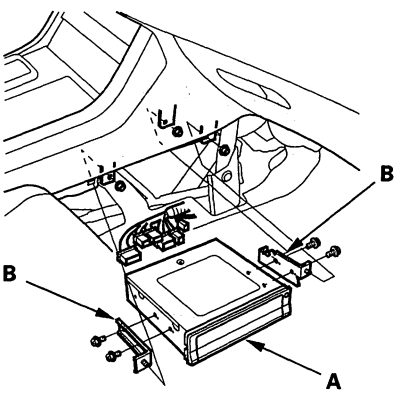


3. Disconnect the navigation unit connectors and remove the navigation unit.
4. Remove the screws from the navigation unit brackets (B).
5. Install the unit in the reverse order of removal.
6. Install the DVD-ROM, then enter the 4-digit security code.
7. Do the system initialization (see page 23-114).
8. Give the new security code to the client.
9. If the factory diagnostic screen (In Line Diag) appears after you replace the unit, refer to system diagnostic mode (see page 23-169).

## GPS Antenna Removal/Installation

1. Remove these items:
   - Dashboard upper panel (see page 20-106)
   - Gauge control module (see page 22-284)
   - Driver's console trim (see page 20-92)
2. Disconnect the GPS antenna connector (A), and remove the bolts (B).

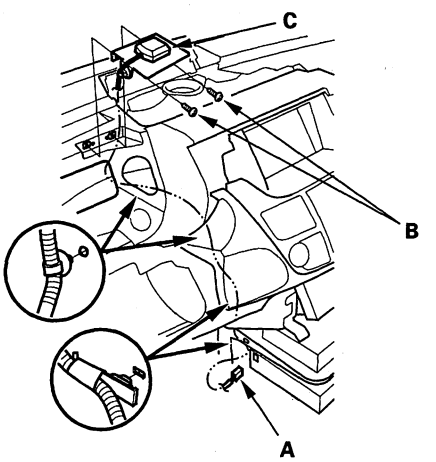


3. Detach the clips, then remove the GPS antenna (C).
4. Install the antenna in the reverse order of removal.



BACK

Protected by AR

## Navigation Display Unit Removal/ Installation

NOTE: Put on gloves to protect your hands. Take care not to scratch the dashboard.

1. Remove the center panel (see page 20-101).
2. Remove the screws, then pull out the navigation display unit (A).

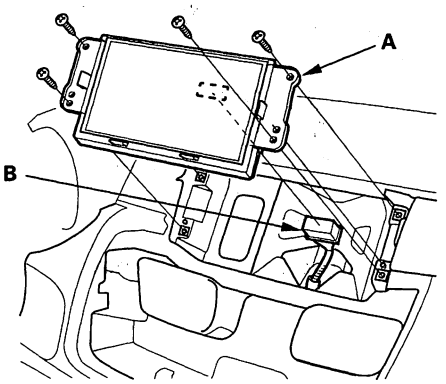


3. Disconnect the connector (B) and remove the navigation display unit.
4. Install the unit in the reverse order of removal.

## Navigation Switch Panel Removal/ Installation

1. Remove the center panel (see page 20-101).
2. Remove the screws and navigation switch panel (A) from the canter panel.

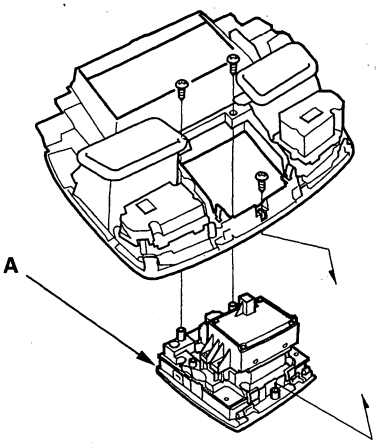


3. Remove the screws (A) and jog dial (B) from the interface dial (C).

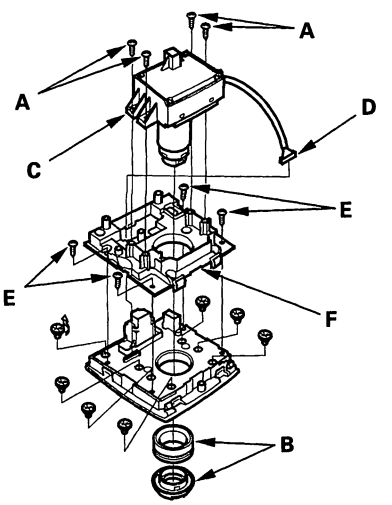


4. Disconnect the connector (D), then remove the interface dial.
5. If necessary, remove the screws (E) and cover (F), then remove the bulbs.
6. Install the dial in the reverse order of removal.

Protected by AR



## Rearview Camera Removal/Installation

1. Remove the rear license trim (see page 20-173).
2. Remove the inner taillight (see page 22-178).
3. Inside the tailgate, disconnect the rearview camera connector (A) and free it from its mounting clip. Remove grommet (B) from the tailgate, then push the rearview camera connector through the hole in the tailgate.

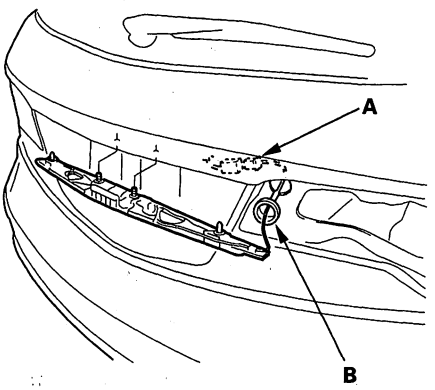


4. Remove screws, then remove the rearview camera (A).

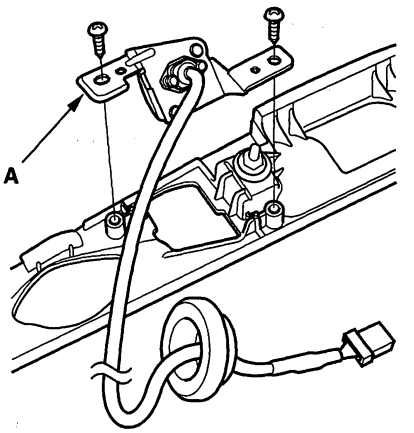


5. Install in the reverse order of removal.



BACK

Protected by AR

## Voice Control Switch Test

1. Remove the HFL-voice control switch (see page 23-240).

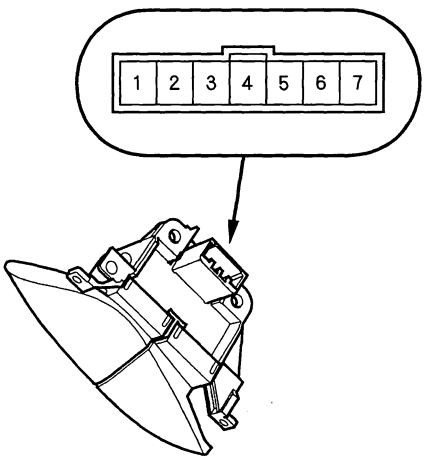


2. Measure the resistance between the No. 3 and No. 5 terminals in each switch position according to the table.

| Position | Resistance |
|---|---|
| OFF | About 10 kΩ |
| TALK button pressed | About 2.9 kΩ |
| BACK button pressed | About 680 kΩ |

3. If the resistance is not as specified, replace the HFL-voice control switch (see page 17-23).

4. Use a diode tester between the terminals in each switch position according to the table.

| Terminal | 6 | | 2 |
|---|---|---|---|
| | ○ | ⊖ | ○ |

5. If the diode test is not as specified, replace the HFL-voice control switch (see page 17-23).

Protected by AR



## Component Location Index

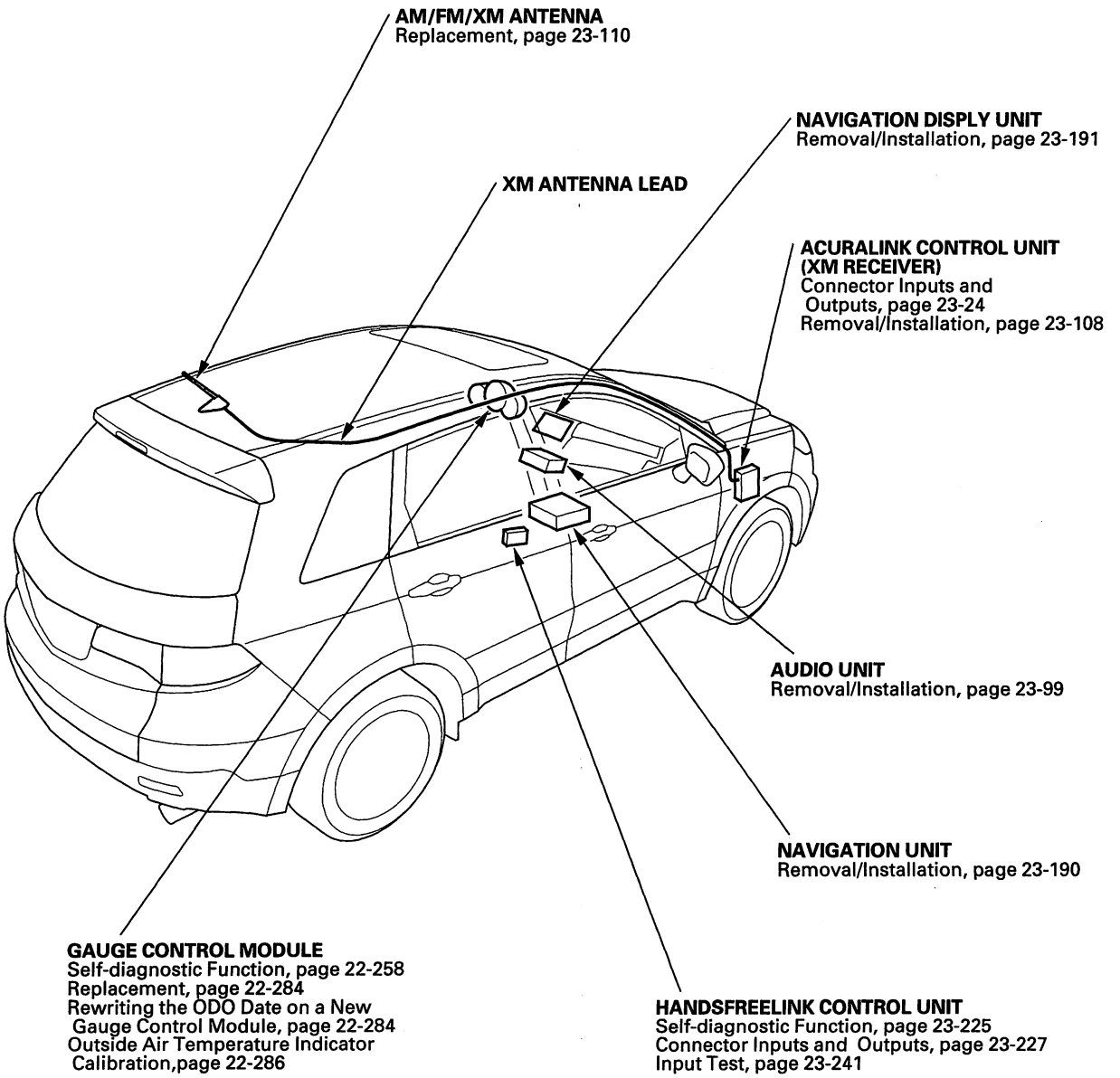




BACK

Protected by AR

## Symptom Troubleshooting Index

| Symptom | Diagnostic procedure | Also check for |
|---|---|---|
| AcuraLink service application does not work | Symptom Troubleshooting (see page 23-220) | • Blown fuse No. 23 (10 A) in the under-hood fuse/relay box and No. 35 (7.5 A), No. 10 (7.5 A) in the under-dash fuse/relay box<br>• Poor ground at G505 |
| AcuraLink services do not work after replacing the AcuraLink control unit (XM receiver) | Navigation System Symptom Troubleshooting (see page 23-166) | • Call Acura Client Services and request an activation.<br>• Call XM customer service and register the replacement AcuraLink control unit (XM receiver). |

Protected by AR

# AcuraLink

## System Description

The AcuraLink uses the client's cell phone or XM radio to transmit and receive information about the vehicle. In addition, the AcuraLink system has a Text-To-Speech engine, and will also have the capability to initiate voice or data calls with the HandsFreeLink control unit.

The AcuraLink control unit (HIP) is very similar in design to an XM receiver that has additional communication features. The main functions include:

- Receiving and playing XM stations. Displaying station, song title and other information on the audio unit using the GA-Net bus.
- Receiving XM traffic channel data.
- Gives "Feature Guide" tips.
- Receiving AcuraLink messages and displaying them in the navi display.
- Processing DTC (diagnostic trouble code) error messages from the PCM, the SRS and other systems and displaying them on the navi display.
- Sending DTC information to the AcuraLink servers using the client's cell phone (only if the client has set up and enabled this option).

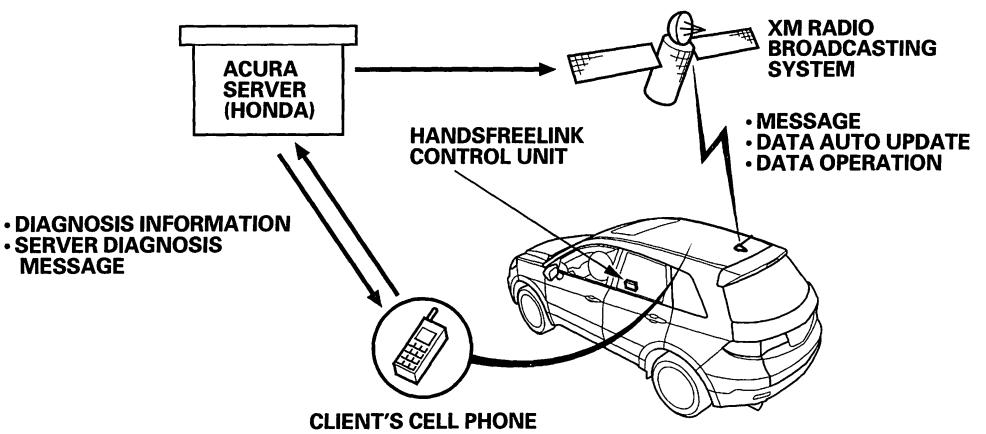


Service Application

- Malfunction indicator lamp (MIL) explanation (from server message and vehicle message)
- Service information message
- Recall Information
- Quick tips
- Place to provide feedback/view cautions that were not available when vehicle was initially sold
- Correction of address and full name that is registered
- Real time traffic information
- Maintenance information message
- Feature guide (90 days)



BACK

Protected by AR

## Self-diagnostic Function

NOTE: Only select "DATA RESET" from the "XM (HIP) ECU" screen when instructed. Selecting "DATA RESET" will clear the AcuraLink registration, and the AcuraLink service will reset to the factory default. If the vehicle was already registered for the AcuraLink service, it will have to be reactivated by calling Acura Client Services before all features will be available.

The AcuraLink control unit (XM receiver) has a self-diagnostic function. To run the self-diagnostic function, do the following:

### How to Enter the Self-diagnostic Function

NOTE: Always check for and repair any CAN DTCs before troubleshooting the AcuraLink system.

1. Turn the ignition switch ON (II).
2. Press the interface dial.
3. Press and hold the MAP/GUIDE, CANCEL, and MENU buttons at the same time for 3 seconds more, and the self-diagnosis will begin.

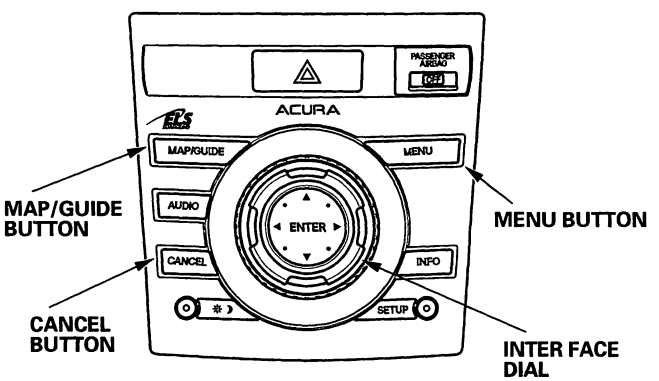


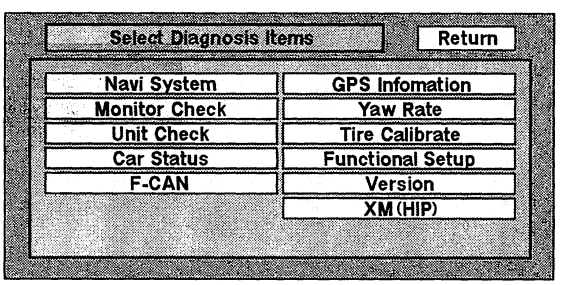


4. Using interface dial, select the "NAVI System" from the "Select Diagnosis Items". Press the interface dial. The display indicates "NAVI System Link", and will perform a Navi connection check for each device. If a connection is faulty, the place where it is faulty will be indicated with "NG" (red color). If "XM (HIP)" indicator is "NG" (red color), go to step 5.

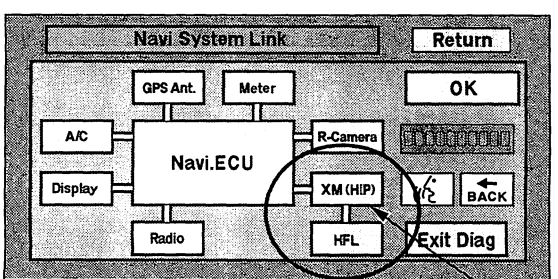


Connection OK: Green color
Connection NG: Red color

AcuraLink indicator

5. Using the interface dial, select the "Return" from the "Navi System Link". Press the interface dial.

(cont'd)

Protected by AR



## Self-diagnostic Function (cont'd)

6. Using the interface dial, select the "XM (HIP)" from the "Select Diagnosis Items". Press the interface dial.

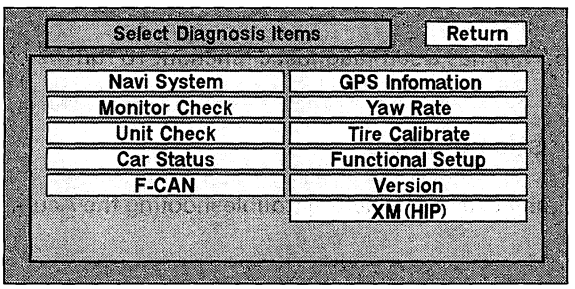


7. Using the interface dial, select the "XM (HIP) System Link" from the "XM (HIP)". Press the interface dial. The display indicates "XM (HIP) System Link", and will perform an AcuraLink connection check for each device. If a connection is faulty, the place where it is faulty will be indicated with "NG" (red color).

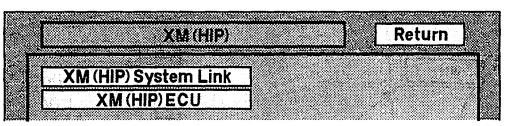


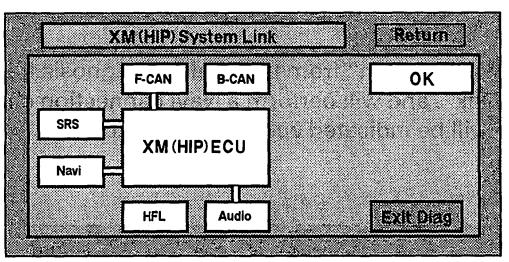


**Connection OK: Green color**
**Connection NG: Red color**



BACK

Protected by AR

8. When a red color is indicated, check the continuity between the AcuraLink control unit (XM receiver) and the device indicated in red.

| Device indicated in red | Test condition | Test: Desired result | Possible cause if result is not obtained |
|---|---|---|---|
| F-CAN | AcuraLink control unit (XM receiver) connector A (20P) and SH-AWD control unit connector A (20P) disconnected | Check for continuity between the No. 6 terminal of AcuraLink control unit (XM receiver) connector A (20P) and the No. 10 terminal of the SH-AWD control unit connector A (20P): There should be continuity. | An open in the wire |
| | | Check for continuity between the No. 16 terminal of AcuraLink control unit (XM receiver) connector A (20P) and the No. 20 terminal of the SH-AWD control unit connector A (20P): There should be continuity. | An open in the wire |
| | AcuraLink control unit (XM receiver) connector A (20P) and PCM connector A (44P) disconnected | Check for continuity between the No. 6 terminal of AcuraLink control unit (XM receiver) connector A (20P) and the No. 36 terminal of the PCM connector A (44P): There should be continuity. | An open in the wire |
| | | Check for continuity between the No. 16 terminal of AcuraLink control unit (XM receiver) connector A (20P) and the No. 37 terminal of the PCM connector A (44P): There should be continuity. | An open in the wire |
| | AcuraLink control unit (XM receiver) connector A (20P) and gauge control module 36P connector disconnected | Check for continuity between the No. 6 terminal of AcuraLink control unit (XM receiver) connector A (20P) and the No. 28 terminal of the gauge control module 36P connector: There should be continuity. | An open in the wire |
| | | Check for continuity between the No. 16 terminal of AcuraLink control unit (XM receiver) connector A (20P) and the No. 29 terminal of the gauge control module 36P connector: There should be continuity. | An open in the wire |
| | AcuraLink control unit (XM receiver) connector A (20P) and TPMS control unit 20P connector disconnected | Check for continuity between the No. 6 terminal of AcuraLink control unit (XM receiver) connector A (20P) and the No. 1 terminal of the TPMS control unit 20P connector: There should be continuity. | An open in the wire |
| | | Check for continuity between the No. 16 terminal of AcuraLink control unit (XM receiver) connector A (20P) and the No. 10 terminal of the TPMS control unit 20P connector: There should be continuity. | An open in the wire |
| | AcuraLink control unit (XM receiver) connector A (20P) and navigation unit connector A (20P) disconnected | Check for continuity between the No. 6 terminal of AcuraLink control unit (XM receiver) connector A (20P) and the No. 8 terminal of the navigation unit connector A (20P): There should be continuity. | An open in the wire |
| | | Check for continuity between the No. 16 terminal of AcuraLink control unit (XM receiver) connector A (20P) and the No. 18 terminal of the navigation unit connector A (20P): There should be continuity. | An open in the wire |

(cont'd)

Protected by AR



## Self-diagnostic Function (cont'd)

| Device indicated in red | Test condition | Test: Desired result | Possible cause if result is not obtained |
|---|---|---|---|
| F-CAN | AcuraLink control unit (XM receiver) connector A (20P) and VSA modulator-control unit 46P connector disconnected | Check for continuity between the No. 6 terminal of AcuraLink control unit (XM receiver) connector A (20P) and the No. 29 terminal of the VSA modulator-control unit 46P connector: There should be continuity. | An open in the wire |
| | | Check for continuity between the No. 16 terminal of AcuraLink control unit (XM receiver) connector A (20P) and the No. 30 terminal of the VSA modulator-control unit 46P connector: There should be continuity. | An open in the wire |
| | AcuraLink control unit (XM receiver) connector A (20P) and SRS unit connector A (28P) disconnected | Check for continuity between the No. 6 terminal of AcuraLink control unit (XM receiver) connector A (20P) and the No. 11 terminal of the SRS unit connector A (28P): There should be continuity. | |
| | | Check for continuity between the No. 16 terminal of AcuraLink control unit (XM receiver) connector A (20P) and the No. 12 terminal of the SRS unit connector A (28P): There should be continuity. | |
| | AcuraLink control unit (XM receiver) connector A (20P), SH-AWD control unit connector A (20P), PCM connector A (44P), gauge control module 36P connector, TPMS control unit 20P connector, VSA modulator-control unit 46P connector, SRS unit connector A (28P) and navigation unit connector A (20P) disconnected | Check for continuity between the No. 6, No. 16 terminals of AcuraLink control unit (XM receiver) connector A (20P) and body ground: There should be no continuity. | A short in the wire |
| | | Check for continuity between the No. 1 and No. 6 terminals of AcuraLink control unit (XM receiver) connector A (20P): There should be no continuity. | A short in the wire |
| | | Check for continuity between the No. 1 and No. 16 terminals of AcuraLink control unit (XM receiver) connector A (20P): There should be no continuity. | A short in the wire |
| | SH-AWD control unit connector A (20P), PCM connector A (44P), gauge control module 36P connector, TPMS control unit 20P connector, VSA modulator-control unit 46P connector, SRS unit connector A (28P) and navigation unit connector A (20P) disconnected | Check for continuity between the No. 6, No. 16 terminals of AcuraLink control unit (XM receiver) connector A (20P) and body ground: There should be no continuity. | A short in the AcuraLink control unit (XM receiver) |
| | AcuraLink control unit (XM receiver) connector A (20P), PCM connector A (44P), gauge control module 36P connector, TPMS control unit 20P connector, VSA modulator-control unit 46P connector, SRS unit connector A (28P) and navigation unit connector A (20P) disconnected | Check for continuity between the No. 6, No. 16 terminals of AcuraLink control unit (XM receiver) connector A (20P) and body ground: There should be no continuity. | A short in the SH-AWD control unit |
| | AcuraLink control unit (XM receiver) connector A (20P), SH-AWD control unit connector A (20P), gauge control module 36P connector, TPMS control unit 20P connector, VSA modulator-control unit 46P connector, SRS unit connector A (28P) and navigation unit connector A (20P) disconnected | Check for continuity between the No. 6, No. 16 terminals of AcuraLink control unit (XM receiver) connector A (20P) and body ground: There should be no continuity. | A short in the PCM |



BACK

Protected by AR

| Device indicated in red | Test condition | Test: Desired result | Possible cause if result is not obtained |
|---|---|---|---|
| F-CAN | AcuraLink control unit (XM receiver) connector A (20P), SH-AWD control unit connector A (20P), PCM connector A (44P), TPMS control unit 20P connector, VSA modulator-control unit 46P connector, SRS unit connector A (28P) and navigation unit connector A (20P) disconnected | Check for continuity between the No. 6, No. 16 terminals of AcuraLink control unit (XM receiver) connector A (20P) and body ground: There should be no continuity. | A short in the gauge control module |
| | AcuraLink control unit (XM receiver) connector A (20P), SH-AWD control unit connector A (20P), PCM connector A (44P), gauge control module 36P connector, VSA modulator-control unit 46P connector, SRS unit connector A (28P) and navigation unit connector A (20P) disconnected | Check for continuity between the No. 6, No. 16 terminals of AcuraLink control unit (XM receiver) connector A (20P) and body ground: There should be no continuity. | A short in the TPMS control unit |
| | AcuraLink control unit (XM receiver) connector A (20P), SH-AWD control unit connector A (20P), PCM connector A (44P), gauge control module 36P connector, TPMS control unit 20P connector, SRS unit connector A (28P) and navigation unit connector A (20P) disconnected | Check for continuity between the No. 6, No. 16 terminals of AcuraLink control unit (XM receiver) connector A (20P) and body ground: There should be no continuity. | A short in the VSA modulator-control unit |
| | AcuraLink control unit (XM receiver) connector A (20P), SH-AWD control unit connector A (20P), PCM connector A (44P), gauge control module 36P connector, TPMS control unit 20P connector, VSA modulator-control unit 46P connector, and navigation unit connector A (20P) disconnected | Check for continuity between the No. 6, No. 16 terminals of AcuraLink control unit (XM receiver) connector A (20P) and body ground: There should be no continuity. | A short in the SRS unit |
| | AcuraLink control unit (XM receiver) connector A (20P), SH-AWD control unit connector A (20P), PCM connector A (44P), gauge control module 36P connector, TPMS control unit 20P connector, VSA modulator-control unit 46P connector, and SRS unit connector A (28P) disconnected | Check for continuity between the No. 6, No. 16 terminals of AcuraLink control unit (XM receiver) connector A (20P) and body ground: There should be no continuity. | A short in the navigation unit |

(cont'd)

Protected by AR



## Self-diagnostic Function (cont'd)

| Device indicated in red | Test condition | Test: Desired result | Possible cause if result is not obtained |
|---|---|---|---|
| B-CAN | AcuraLink control unit (XM receiver) connector B (16P) and gauge control module 36P connector disconnected | Check for continuity between the No. 5 terminal of AcuraLink control unit (XM receiver) connector B (16P) and the No. 30 terminal of the gauge control module 36P connector: There should be continuity. | An open in the wire |
| | AcuraLink control unit (XM receiver) connector B (16P) and immobilizer-keyless control unit 7P connector disconnected | Check for continuity between the No. 5 terminal of AcuraLink control unit (XM receiver) connector B (16P) and the No. 4 terminal of the immobilizer-keyless control unit 7P connector: There should be continuity. | An open in the wire |
| | AcuraLink control unit (XM receiver) connector B (16P) and under-dash fuse/relay box connector Q (16P) disconnected | Check for continuity between the No. 5 terminal of AcuraLink control unit (XM receiver) connector B (16P) and the No. 6 terminal of the under-dash fuse/relay box connector Q (16P) disconnected: There should be continuity. | An open in the wire |
| | AcuraLink control unit (XM receiver) connector B (16P) and climate control unit connector B (16P) disconnected | Check for continuity between the No. 5 terminal of AcuraLink control unit (XM receiver) connector B (16P) and the No. 8 terminal of the climate control unit connector B (16P): There should be continuity. | An open in the wire |
| | AcuraLink control unit (XM receiver) connector B (16P) and HandsFreeLink control unit 22P connector disconnected | Check for continuity between the No. 5 terminal of AcuraLink control unit (XM receiver) connector B (16P) and the No. 14 terminal of the HandsFreeLink control unit 22P connector: There should be continuity. | An open in the wire |
| | AcuraLink control unit (XM receiver) connector B (16P), under-dash fuse/relay box connector Q (16P), gauge control module 36P connector, immobilizer-keyless control unit 7P connector, HandsFreeLink control unit 22P connector, and climate control unit connector B (16P) disconnected | Check for continuity between the No. 5 terminal of AcuraLink control unit (XM receiver) connector B (16P) and body ground: There should be no continuity. | A open in the wire |
| | | Check for continuity between the No. 5 terminal of AcuraLink control unit (XM receiver) connector B (16P) and the No. 1 terminal of the AcuraLink control unit (XM receiver) unit connector A (20P): There should be no continuity. | A open in the wire |
| | Under-dash fuse/relay box connector Q (16P), gauge control module 36P connector, immobilizer-keyless control unit 7P connector, HandsFreeLink control unit 22P connector, and climate control unit connector B (16P) disconnected | Check for continuity between the No. 5 terminals of AcuraLink control unit (XM receiver) connector B (16P) and body ground: There should be no continuity. | A short in the AcuraLink control unit (XM receiver) |
| | AcuraLink control unit (XM receiver) connector B (16P), gauge control module 36P connector, immobilizer-keyless control unit 7P connector, HandsFreeLink control unit 22P connector, and climate control unit connector B (16P) disconnected | Check for continuity between the No. 5 terminals of AcuraLink control unit (XM receiver) connector B (16P) and body ground: There should be no continuity. | A short in the under-dash fuse/relay box |



BACK

Protected by AR

| Device indicated in red | Test condition | Test: Desired result | Possible cause if result is not obtained |
|---|---|---|---|
| B-CAN | AcuraLink control unit (XM receiver) connector B (16P), under-dash fuse/ relay box connector Q (16P), immobilizer-keyless control unit 7P connector, HandsFreeLink control unit 22P connector, and climate control unit connector B (16P) disconnected | Check for continuity between the No. 5 terminals of AcuraLink control unit (XM receiver) connector B (16P) and body ground: There should be no continuity. | A short in the gauge control module |
| | AcuraLink control unit (XM receiver) connector B (16P), under-dash fuse/ relay box connector Q (16P), gauge control module 36P connector, HandsFreeLink control unit 22P connector, and climate control unit connector B (16P) disconnected | Check for continuity between the No. 5 terminals of AcuraLink control unit (XM receiver) connector B (16P) and body ground: There should be no continuity. | A short in the immobilizer-keyless control unit |
| | AcuraLink control unit (XM receiver) connector B (16P), under-dash fuse/ relay box connector Q (16P), gauge control module 36P connector, immobilizer-keyless control unit 7P connector, and climate control unit connector B (16P) disconnected | Check for continuity between the No. 5 terminals of AcuraLink control unit (XM receiver) connector B (16P) and body ground: There should be no continuity. | A short in the HandsFreeLink control unit |
| | AcuraLink control unit (XM receiver) connector B (16P), under-dash fuse/ relay box connector Q (16P), gauge control module 36P connector, immobilizer-keyless control unit 7P connector, and HandsFreeLink control unit 22P connector disconnected | Check for continuity between the No. 5 terminals of AcuraLink control unit (XM receiver) connector B (16P) and body ground: There should be no continuity. | A short in the climate control unit |

(cont'd)

Protected by AR



## Self-diagnostic Function (cont'd)

| Device indicated in red | Test condition | Test: Desired result | Possible cause if result is not obtained |
|---|---|---|---|
| Navi | AcuraLink control unit (XM receiver) connector A (20P) and navigation unit connector F (5P) disconnected | Check for continuity between the No. 3 terminal of AcuraLink control unit (XM receiver) connector A (20P) and the No. 1 terminal of the navigation unit connector F (5P): There should be continuity. | An open in the wire |
| | | Check for continuity between the No. 13 terminal of AcuraLink control unit (XM receiver) connector A (20P) and the No. 2 terminal of the navigation unit connector F (5P): There should be continuity. | An open in the wire |
| | | Check for continuity between the No. 4 terminal of AcuraLink control unit (XM receiver) connector A (20P) and the No. 3 terminal of the navigation unit connector F (5P): There should be continuity. | An open in the wire |
| | | Check for continuity between the No. 14 terminal of AcuraLink control unit (XM receiver) connector A (20P) and the No. 4 terminal of the navigation unit connector F (5P): There should be continuity. | An open in the wire |
| | | Check for continuity between the No. 3 terminal of AcuraLink control unit (XM receiver) connector A (20P) and body ground: There should be no continuity. | A short in the wire |
| | | Check for continuity between the No. 1 and No. 3 terminals of AcuraLink control unit (XM receiver) connector A (20P): There should be no continuity. | A short to power in the wire |
| | | Check for continuity between the No. 13 terminal of AcuraLink control unit (XM receiver) connector A (20P) and body ground: There should be no continuity. | A short in the wire |
| | | Check for continuity between the No. 1 and No. 13 terminals of AcuraLink control unit (XM receiver) connector A (20P): There should be no continuity. | A short to power in the wire |
| | | Check for continuity between the No. 4 terminal of AcuraLink control unit (XM receiver) connector A (20P) and body ground: There should be no continuity. | A short in the wire |
| | | Check for continuity between the No. 1 and No. 4 terminals of AcuraLink control unit (XM receiver) connector A (20P): There should be no continuity. | A short to power in the wire |
| | | Check for continuity between the No. 14 terminal of AcuraLink control unit (XM receiver) connector A (20P) and body ground: There should be no continuity. | A short in the wire |
| | | Check for continuity between the No. 1 and No. 14 terminals of AcuraLink control unit (XM receiver) connector A (20P): There should be no continuity. | A short to power in the wire |



BACK

Protected by AR

| Device indicated in red | Test condition | Test: Desired result | Possible cause if result is not obtained |
|---|---|---|---|
| Navi | Navigation unit connector F (5P) disconnected | Check for continuity between the No. 3 terminal of AcuraLink control unit (XM receiver) connector A (20P) and body ground: There should be no continuity. | A short in the AcuraLink control unit (XM receiver) |
| | | Check for continuity between the No. 13 terminal of AcuraLink control unit (XM receiver) connector A (20P) and body ground: There should be no continuity. | A short in the AcuraLink control unit (XM receiver) |
| | | Check for continuity between the No. 4 terminal of AcuraLink control unit (XM receiver) connector A (20P) and body ground: There should be no continuity. | A short in the AcuraLink control unit (XM receiver) |
| | | Check for continuity between the No. 14 terminal of AcuraLink control unit (XM receiver) connector A (20P) and body ground: There should be no continuity. | A short in the AcuraLink control unit (XM receiver) |
| | AcuraLink control unit (XM receiver) connector A (20P) disconnected | Check for continuity between the No. 3 terminal of AcuraLink control unit (XM receiver) connector A (20P) and body ground: There should be no continuity. | A short in the navigation unit |
| | | Check for continuity between the No. 13 terminal of AcuraLink control unit (XM receiver) connector A (20P) and body ground: There should be no continuity. | A short in the navigation unit |
| | | Check for continuity between the No. 4 terminal of AcuraLink control unit (XM receiver) connector A (20P) and body ground: There should be no continuity. | A short in the navigation unit |
| | | Check for continuity between the No. 14 terminal of AcuraLink control unit (XM receiver) connector A (20P) and body ground: There should be no continuity. | A short in the navigation unit |
| HFL | AcuraLink control unit (XM receiver) connector B (16P) and HandsFreeLink control unit 22P connector disconnected | Check for continuity between the No. 8 terminal of AcuraLink control unit (XM receiver) connector B (16P) and the No. 16 terminal of the HandsFreeLink control unit 22P connector: There should be continuity. | An open in the wire |
| | | Check for continuity between the No. 16 terminal of AcuraLink control unit (XM receiver) connector B (16P) and the No. 17 terminal of the HandsFreeLink control unit 22P connector: There should be continuity. | An open in the wire |
| | | Check for continuity between the No. 7 terminal of AcuraLink control unit (XM receiver) connector B (16P) and the No. 5 terminal of the HandsFreeLink control unit 22P connector: There should be continuity. | An open in the wire |
| | | Check for continuity between the No. 15 terminal of AcuraLink control unit (XM receiver) connector B (16P) and the No. 15 terminal of the HandsFreeLink control unit 22P connector: There should be continuity. | An open in the wire |

(cont'd)

Protected by AR



## Self-diagnostic Function (cont'd)

| Device indicated in red | Test condition | Test: Desired result | Possible cause if result is not obtained |
|---|---|---|---|
| HFL | AcuraLink control unit (XM receiver) connector B (16P) and HandsFreeLink control unit 22P connector disconnected | Check for continuity between the No. 8 terminal of AcuraLink control unit (XM receiver) connector B (16P) and body ground: There should be no continuity. | A short in the wire |
| | | Check for continuity between the No. 1 terminal of AcuraLink control unit (XM receiver) connector A (20P) and the No. 8 terminal of the AcuraLink control unit (XM receiver) connector B (16P): There should be no continuity. | A short to power in the wire |
| | | Check for continuity between the No. 16 terminal of AcuraLink control unit (XM receiver) connector B (16P) and body ground: There should be no continuity. | A short in the wire |
| | | Check for continuity between the No. 1 terminal of AcuraLink control unit (XM receiver) connector A (20P) and the No. 16 terminal of the AcuraLink control unit (XM receiver) connector B (16P): There should be no continuity. | A short to power in the wire |
| | | Check for continuity between the No. 7 terminal of AcuraLink control unit (XM receiver) connector B (16P) and body ground: There should be no continuity. | A short in the wire |
| | | Check for continuity between the No. 1 terminal of AcuraLink control unit (XM receiver) connector A (20P) and the No. 7 terminal of the AcuraLink control unit (XM receiver) connector B (16P): There should be no continuity. | A short to power in the wire |
| | | Check for continuity between the No. 15 terminal of AcuraLink control unit (XM receiver) connector B (16P) and body ground: There should be no continuity. | A short in the wire |
| | | Check for continuity between the No. 1 terminal of AcuraLink control unit (XM receiver) connector A (20P) and the No. 15 terminal of the AcuraLink control unit (XM receiver) connector B (16P): There should be no continuity. | A short to power in the wire |
| | HandsFreeLink control unit 22P connector disconnected | Check for continuity between the No. 8 terminal of AcuraLink control unit (XM receiver) connector B (16P) and body ground: There should be no continuity. | A short in the AcuraLink control unit (XM receiver) |
| | | Check for continuity between the No. 16 terminal of AcuraLink control unit (XM receiver) connector B (16P) and body ground: There should be no continuity. | A short in the AcuraLink control unit (XM receiver) |
| | | Check for continuity between the No. 7 terminal of AcuraLink control unit (XM receiver) connector B (16P) and body ground: There should be no continuity. | A short in the AcuraLink control unit (XM receiver) |
| | | Check for continuity between the No. 15 terminal of AcuraLink control unit (XM receiver) connector B (16P) and body ground: There should be no continuity. | A short in the AcuraLink control unit (XM receiver) |
| | AcuraLink control unit (XM receiver) connector A (20P) disconnected | Check for continuity between the No. 8 terminal of AcuraLink control unit (XM receiver) connector B (16P) and body ground: There should be no continuity. | A short in the HandsFreeLink control unit |
| | | Check for continuity between the No. 16 terminal of AcuraLink control unit (XM receiver) connector B (16P) and body ground: There should be no continuity. | A short in the HandsFreeLink control unit |
| | | Check for continuity between the No. 7 terminal of AcuraLink control unit (XM receiver) connector B (16P) and body ground: There should be no continuity. | A short in the HandsFreeLink control unit |
| | | Check for continuity between the No. 15 terminal of AcuraLink control unit (XM receiver) connector B (16P) and body ground: There should be no continuity. | A short in the HandsFreeLink control unit |



BACK

Protected by AR

| Device indicated in red | Test condition | Test: Desired result | Possible cause if result is not obtained |
|---|---|---|---|
| Audio | AcuraLink control unit (XM receiver) connector A (20P) and audio unit connector B (14P) disconnected | Check for continuity between the No. 7 terminal of AcuraLink control unit (XM receiver) connector A (20P) and the No. 9 terminal of the audio unit connector B (14P): There should be continuity. | An open in the wire |
| | | Check for continuity between the No. 17 terminal of AcuraLink control unit (XM receiver) connector A (20P) and the No. 10 terminal of the audio unit connector B (14P): There should be continuity. | An open in the wire |
| | | Check for continuity between the No. 7 terminal of AcuraLink control unit (XM receiver) connector A (20P) and body ground: There should be no continuity. | A short in the wire |
| | | Check for continuity between the No. 1 and No. 7 terminals of AcuraLink control unit (XM receiver) connector A (20P): There should be no continuity. | A short to power in the wire |
| | | Check for continuity between the No. 17 terminal of AcuraLink control unit (XM receiver) connector A (20P) and body ground: There should be no continuity. | A short in the wire |
| | | Check for continuity between the No. 1 and No. 17 terminals of AcuraLink control unit (XM receiver) connector A (20P): There should be no continuity. | A short to power in the wire |
| | Audio unit connector B (14P) disconnected | Check for continuity between the No. 7 terminal of AcuraLink control unit (XM receiver) connector A (20P) and body ground: There should be no continuity. | A short in the AcuraLink control unit (XM receiver) |
| | | Check for continuity between the No. 17 terminal of AcuraLink control unit (XM receiver) connector A (20P) and body ground: There should be no continuity. | A short in the AcuraLink control unit (XM receiver) |
| | AcuraLink control unit (XM receiver) connector A (20P) disconnected | Check for continuity between the No. 7 terminal of AcuraLink control unit (XM receiver) connector A (20P) and body ground: There should be no continuity. | A short in the audio unit |
| | | Check for continuity between the No. 17 terminal of AcuraLink control unit (XM receiver) connector A (20P) and body ground: There should be no continuity. | A short in the audio unit. |

NOTE: If the XM antenna connection condition is faulty, "XM ANTENNA" will be indicated on the audio-HVAC subdisplay unit.

9. If the indication does not go away, confirm DTCs, and refer to the relevant system troubleshooting and input tests.

## Cancelling the Self-diagnostic Function

1. Use the interface dial, select the "Exit Diag". Press the interface dial to cancel the self-diagnostic function.

Protected by AR

# AcuraLink

## Circuit Diagram

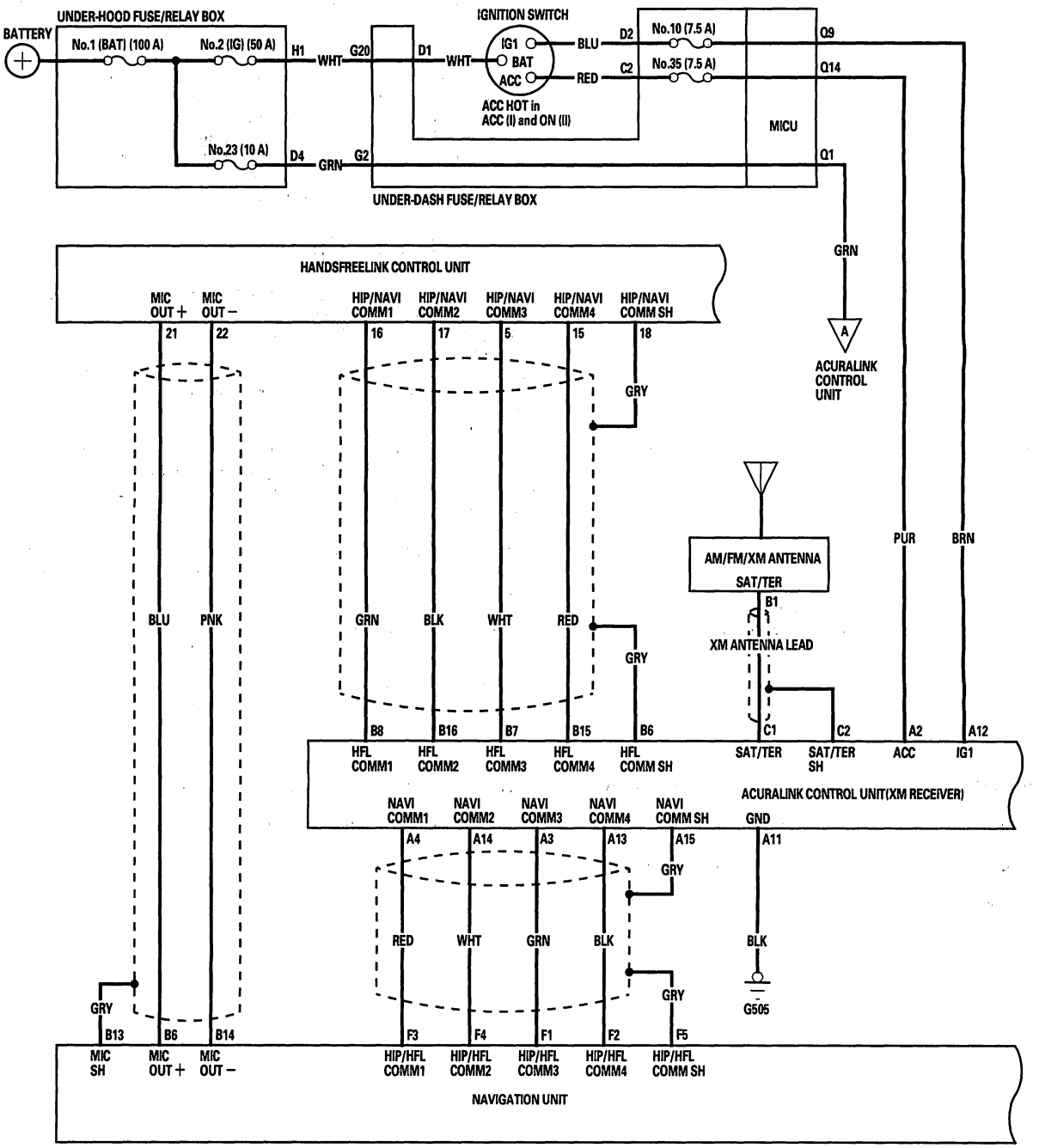




BACK

Protected by AR

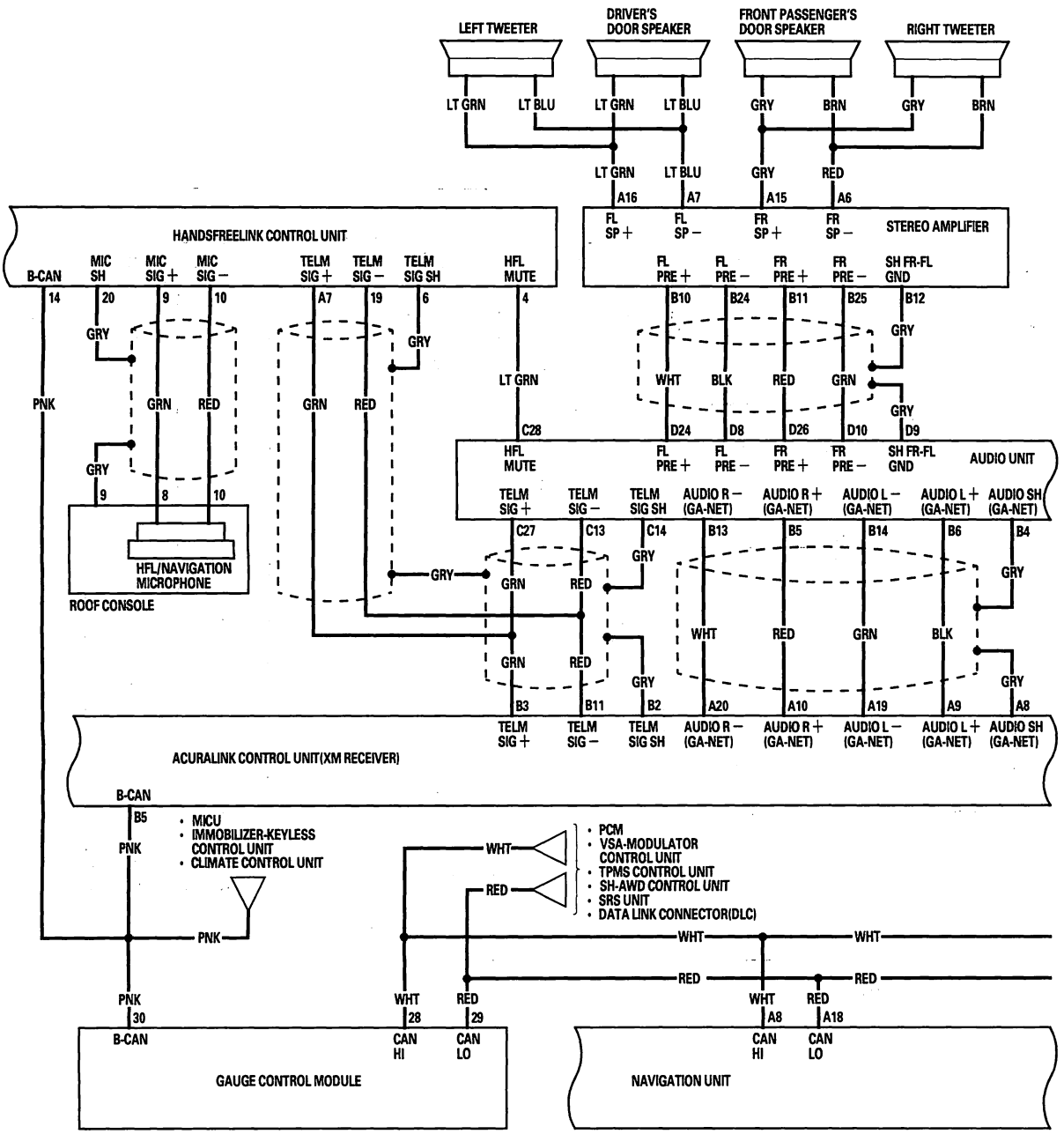


(cont'd)

BACK

Protected by AR



## Circuit Diagram (cont'd)

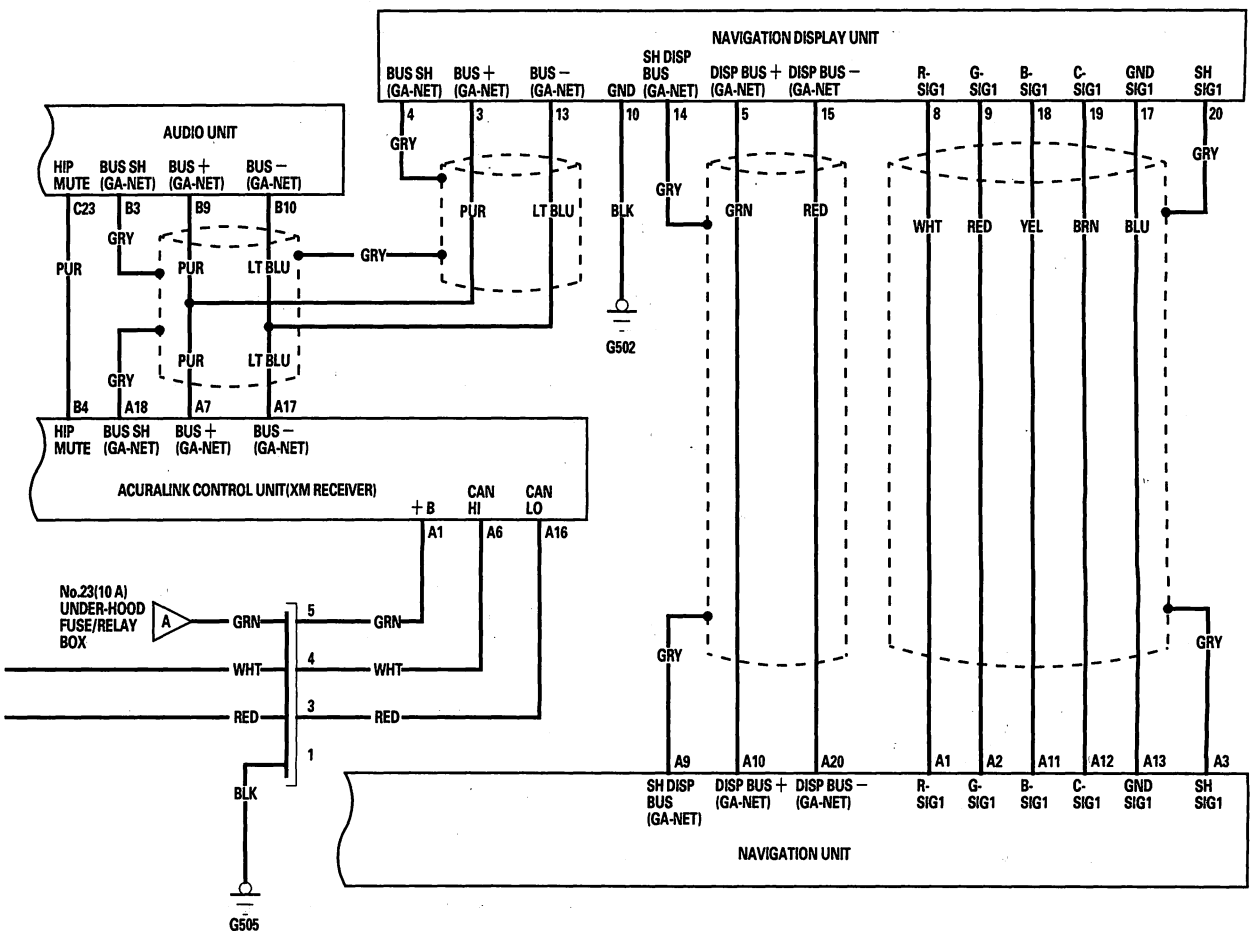




BACK

Protected by AR



## DTC B2204: B-CAN Communication Line Error

NOTE: If you are troubleshooting multiple DTCs, be sure to follow the instructions in B-CAN system diagnosis test mode A (see page 22-88).

1. Connect the HDS to the DLC (see page 11-3).

2. Turn the ignition switch ON (II).

3. Check for DTCs with the HDS and DTC log data in the navigation system diagnostic mode (see page 23-169).

   *Is DTC B2204 indicated with HDS and on the navigation display?*

   **YES**—Go to step 4.

   **NO**—Intermittent failure, B-CAN communication line is OK at this time. Check for poor connections or loose terminals at the AcuraLink control unit (XM receiver).■

4. Turn the ignition switch OFF.

5. Disconnect the AcuraLink control unit (XM receiver) connector B (16P) and the gauge control module 36P connector.

6. Check for continuity between the AcuraLink control unit (XM receiver) connector B (16P) terminal No. 5 and gauge control module 36P connector terminal No. 30.

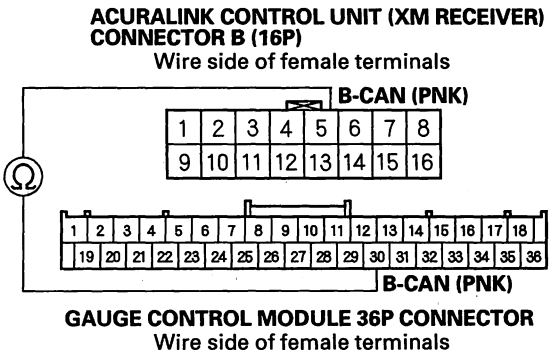


*Is there continuity?*

**YES**—Check for poor connections or loose terminals at the AcuraLink control unit (XM receiver). If all connections are OK, replace the AcuraLink control unit (XM receiver) (see page 23-108).■

**NO**—Repair open in the wire between AcuraLink control unit (XM receiver) and the gauge control module.■

Protected by AR



## DTC Troubleshooting (cont'd)

### DTC B2205: F-CAN Communication Line Error

NOTE: If you are troubleshooting multiple DTCs, be sure to follow the instructions in B-CAN system diagnosis test mode A (see page 22-88).

1. Connect the HDS to the DLC (see page 11-3).
2. Turn the ignition switch ON (II).
3. Check for DTCs with the HDS and DTC log data in the navigation system diagnostic mode (see page 23-169).

   *Is DTC B2205 indicated with HDS and on the navigation display?*

   **YES**—Go to step 4.

   **NO**—Intermittent failure, F-CAN communication line is OK at this time. Check for poor connections or loose terminals at the AcuraLink control unit (XM receiver). ■
4. Turn the ignition switch OFF.
5. Disconnect the AcuraLink control unit (XM receiver) connector A (20P) and the gauge control module 36P connector.
6. Check for continuity between the AcuraLink control unit (XM receiver) connector A (20P) terminal No. 6, No. 16 and gauge control module 36P connector terminal No. 28, No. 29 individually.

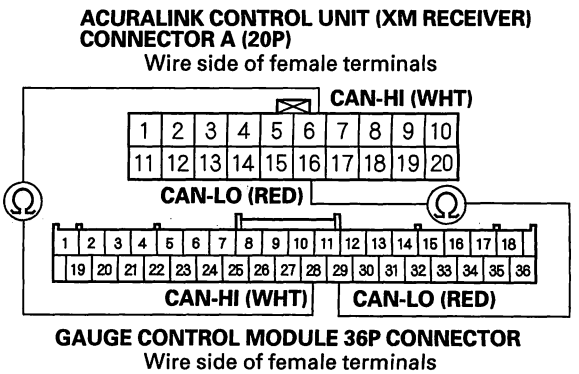


*Is there continuity?*

**YES**—Check for poor connections or loose terminals at the AcuraLink control unit (XM receiver). If all connection are OK, replace the AcuraLink control unit (XM receiver) (see page 23-108). ■

**NO**—Repair open in the wire between AcuraLink control unit (XM receiver) and the gauge control module. ■



BACK

Protected by AR

## **DTC B2207:** Navigation Unit Lost Communication with AcuraLink Control Unit (XM Receiver)

1. Connect the HDS to the DLC (see page 11-3).

2. Clear the DTC with the HDS.

3. Turn the ignition switch OFF, then turn it ON (II) and wait 30 seconds or more.

4. Check for DTC with the HDS.

   *Is DTC B2207, B2208 indicated?*

   **YES**—Check the battery condition (see page 22-63). If the system is OK, replace the AcuraLink control unit (XM receiver).■

   **NO**—
   - If only B2207 is indicated, go to step 5.
   - If only B2208 is indicated, refer to the B2208 troubleshooting.

5. Turn the ignition switch OFF.

6. Disconnect the AcuraLink control unit (XM receiver) connector A (20P) and the navigation unit connector F (5P).

7. Check for continuity between the following terminals of AcuraLink control unit (XM receiver) connector A (20P) and the navigation unit connector F (5P).

**ACURALINK CONTROL UNIT (XM RECEIVER) CONNECTOR A (20P)**
Wire side of female terminals

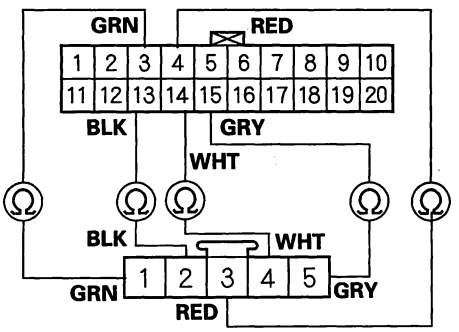


**NAVIGATION UNIT CONNECTOR F (5P)**
Wire side of female terminals

*Is there continuity?*

**YES**—Go to step 8.

**NO**—Repair open in the wire(s) between the AcuraLink control unit (XM receiver) and the navigation unit.■

(cont'd)

Protected by AR



## DTC Troubleshooting (cont'd)

8. Check for continuity between body ground and AcuraLink control unit (XM receiver) connector A (20P) terminals No. 3, No. 4, No. 13, and No. 14 individually.

**ACURALINK CONTROL UNIT (XM RECEIVER) CONNECTOR A (20P)**

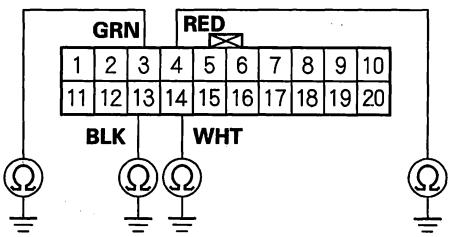


Wire side of female terminals

*Is there continuity?*

**YES**—Repair short to body ground in the wire(s) between the AcuraLink control unit (XM receiver) and the navigation unit.■

**NO**—Go to step 9.

9. Check for continuity between the terminals of AcuraLink control unit (XM receiver) connector A (20P) as follows.

| From terminal | To terminals |
|---|---|
| A3 | A4, A13, A14, A15 |
| A4 | A13, A14, A15 |
| A13 | A14, A15 |
| A14 | A15 |

*Is there continuity between any of the terminals?*

**YES**—Repair short in the wire(s) between the AcuraLink control unit (XM receiver) and navigation unit (replace the appropriate shielded harness).■

**NO**—Go to step 10.

10. Turn the ignition switch ON (II), and check the same terminals for voltage.

**ACURALINK CONTROL UNIT (XM RECEIVER) CONNECTOR A (20P)**

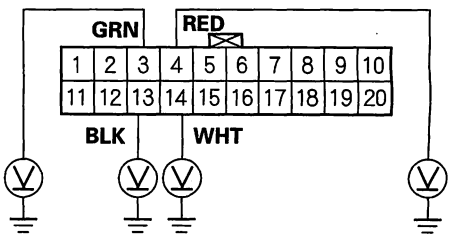


Wire side of female terminals

*Is there any voltage?*

**YES**—Repair short to power in the wire(s) between the AcuraLink control unit (XM receiver) and the navigation unit.■

**NO**—Go to step 11.

11. Turn the ignition switch OFF.

12. Reconnect the AcuraLink control unit (XM receiver) connector A (20P).



BACK

Protected by AR

13. Measure the resistance between AcuraLink control unit (XM receiver) connector A (20P) terminals No. 3, No. 4, and No. 13, No. 14.

**ACURALINK CONTROL UNIT (XM RECEIVER) CONNECTOR A (20P)**

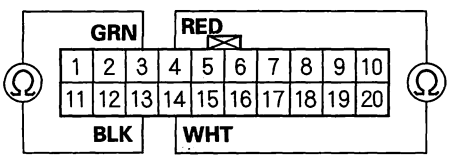


Wire side of female terminals

*Is there less than about 100 kΩ ?*

**YES**—AcuraLink control unit (XM receiver) is faulty, replace the AcuraLink control unit (XM receiver).■

**NO**—Go to step 14.

14. Reconnect the navigation unit connector F (5P).

15. Turn the ignition switch ON (II).

16. Measure the voltage between the body ground and the AcuraLink control unit (XM receiver) connector A (20P) terminal No. 3, No. 4 individually.

**ACURALINK CONTROL UNIT (XM RECEIVER) CONNECTOR A (20P)**

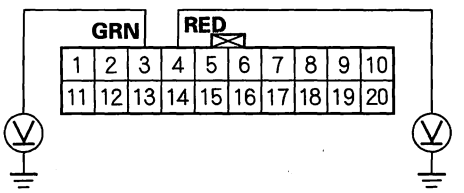


Wire side of female terminals

*Is there less than about 3.5 V?*

**YES**—AcuraLink control unit (XM receiver) is faulty, replace the AcuraLink control unit (XM receiver).■

**NO**—Navigation unit is faulty, replace the navigation unit.■

Protected by AR



## DTC Troubleshooting (cont'd)

### DTC B2208: HandsFreeLink Control Unit Lost Communication with AcuraLink Control Unit

1. Connect the HDS to the DLC (see page 11-3).
2. Clear the DTC with the HDS.
3. Turn the ignition switch OFF, then turn it ON (II) and wait 30 seconds or more.
4. Check for DTC with the HDS.

   *Is DTC B2207, B2208 indicated?*

   **YES**—Check the battery condition (see page 22-63). If the system is OK, replace the AcuraLink control unit (XM receiver).■

   **NO**—
   - If only B2208 is indicated, go to step 5.
   - If only B2207 is indicated, refer to the B2207 troubleshooting.

5. Turn the ignition switch OFF.
6. Disconnect the AcuraLink control unit (XM receiver) connector B (16P) and the HandsFreeLink control unit 22P connector.
7. Check for continuity between the following terminals of AcuraLink control unit (XM receiver) connector B (16P) and the HandsFreeLink control unit 22P connector.

**ACURALINK CONTROL UNIT (XM RECEIVER) CONNECTOR B (16P)**
Wire side of female terminals

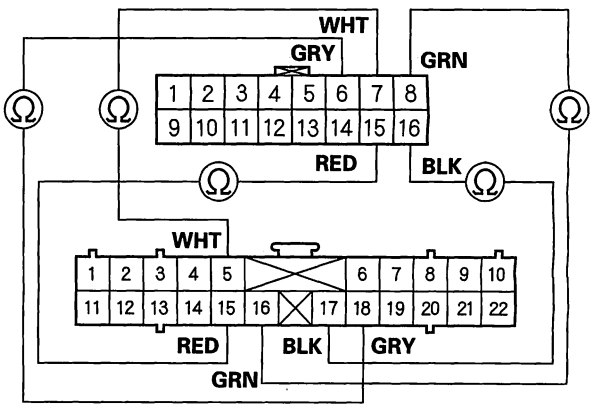


**HANDSFREELINK CONTROL UNIT 22P CONNECTOR**
Wire side of female terminals

*Is there continuity?*

**YES**—Go to step 8.

**NO**—Repair open in the wire(s) between the AcuraLink control unit (XM receiver) and the HandsFreeLink control unit.■



BACK

Protected by AR

8. Check for continuity between body ground and AcuraLink control unit (XM receiver) connector B (16P) terminals No. 7, No. 8, No. 15 and No.16 individually.

**ACURALINK CONTROL UNIT (XM RECEIVER) CONNECTOR B (16P)**

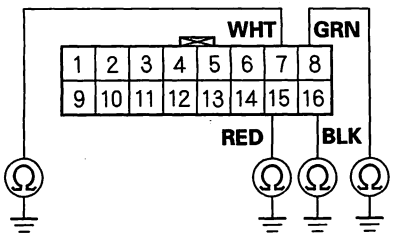


Wire side of female terminals

*Is there continuity?*

**YES**—Repair short to body ground in the wire(s) between the AcuraLink control unit (XM receiver) and the HandsFreeLink control unit. ■

**NO**—Go to step 9.

9. Check for continuity between the terminals of AcuraLink control unit (XM receiver) connector B (16P) as follows.

| From terminal | To terminals |
|---|---|
| B7 | B8, B15, B16, B6 |
| B8 | B15, B16, B6 |
| B15 | B16, B6 |
| B16 | B6 |

*Is there continuity between any of the terminals?*

**YES**—Repair short in the wire(s) between the AcuraLink control unit (XM receiver) and HansFreeLink control unit (replace the appropriate shielded harness). ■

**NO**—Go to step 10.

10. Turn the ignition switch ON (II), and check the same terminals for voltage.

**ACURALINK CONTROL UNIT (XM RECEIVER) CONNECTOR B (16P)**

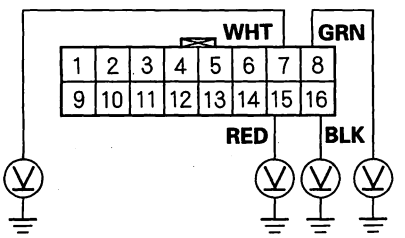


Wire side of female terminals

*Is there any voltage?*

**YES**—Repair short to power in the wire(s) between the AcuraLink control unit (XM receiver)and the HansFreeLink control unit. ■

**NO**—Go to step 11.

11. Turn the ignition switch OFF.

12. Reconnect the AcuraLink control unit (XM receiver) connector B (16P).

(cont'd)

Protected by AR



## DTC Troubleshooting (cont'd)

13. Measure the resistance between AcuraLink control unit (XM receiver) connector B (16P) terminals No. 7, No. 8, and No. 15, No.16.

**ACURALINK CONTROL UNIT (XM RECEIVER) CONNECTOR B (16P)**

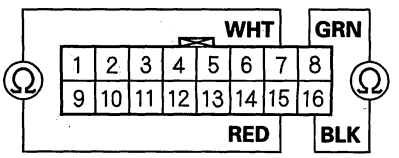


Wire side of female terminals

*Is there less than about 100 kΩ ?*

**YES**—AcuraLink control unit (XM receiver) is faulty, replace the AcuraLink control unit (XM receiver).■

**NO**—Go to step 14.

14. Reconnect the HansFreeLink control unit 22P connector.

15. Turn the ignition switch ON (II).

16. Measure the voltage between the body ground and the AcuraLink control unit (XM receiver) connector B (16P) terminal No. 7, No. 8 individually.

**ACURALINK CONTROL UNIT (XM RECEIVER) CONNECTOR B (16P)**

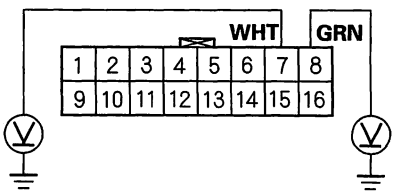


Wire side of female terminals

*Is there less than about 3.5 V?*

**YES**—AcuraLink control unit (XM receiver) is faulty, replace the AcuraLink control unit (XM receiver).■

**NO**—HansFreeLink control unit is faulty, replace the HansFreeLink control unit.■



BACK

Protected by AR

## **DTC B2209:** AcuraLink Control Unit Internal Error

1. Connect the HDS to the DLC (see page 11-3).
2. Clear the DTC with the HDS.
3. Turn the ignition switch OFF, then turn it ON (II) and wait 30 seconds or more.
4. Check for DTC with the HDS.

   *Is DTC B2209 indicated?*

   **YES**—AcuraLink control unit (XM receiver) is faulty, replace the AcuraLink control unit (XM receiver).■

   **NO**—Intermittent failure, AcuraLink control unit (XM receiver) is OK at this time.■

## **DTC B2240:** XM Antenna Error

1. Connect the HDS to the DLC (see page 11-3).
2. Clear the DTC with the HDS.
3. Turn the ignition switch OFF, then turn it ON (II) and wait 30 seconds or more.
4. Check for DTC with the HDS.

   *Is DTC B2240 indicated?*

   **YES**—Go to step 5.

   **NO**—Intermittent failure, AM/FM/XM antenna is OK at this time. Check for poor connections or loose terminals at the AcuraLink control unit (XM receiver) and AM/FM/XM antenna.■

5. Check the XM antenna lead connection at the AcuraLink control unit (XM receiver) and at the AM/FM/XM antenna.

   *Is it connected properly?*

   **YES**—Substitute a known-good AM/FM/XM antenna, and recheck. If the symptom/indicated goes away, replace the original AM/FM/XM antenna. If the symptom/indicated is still present replace the AcuraLink control unit (XM receiver).■

   **NO**—Reconnect the connector, and recheck the DTC.■

Protected by AR



## Symptom Troubleshooting

### AcuraLink service application does not work

NOTE: In order for the AcuraLink service to work, the client must have an activated account with XM (receives all channels).

1. Check the No. 23 (10 A) fuse in the under-hood fuse/relay box and No. 35 (7.5 A), No. 10 (7.5 A) fuse in the under-dash fuse/relay box.

   *Are the fuses OK?*

   **YES**—Go to step 2.

   **NO**—Replace the fuse(s), and recheck. ■

2. Turn the ignition switch to ACC (I).

3. Measure the voltage between the No. 2 terminal of the AcuraLink control unit (XM receiver) connector A (20P) and body ground.

**ACURALINK CONTROL UNIT (XM RECEIVER) CONNECTOR A (20P)**

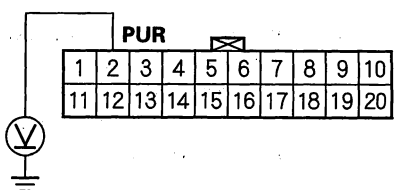


Wire side of female terminals

*Is there battery voltage?*

**YES**—Go to step 4.

**NO**—Repair open in the wire(s) between the AcuraLink control unit (XM receiver) and the No. 35 (7.5 A) fuse in the under-dash fuse/relay box. ■

4. Turn the ignition switch ON (II).

5. Measure the voltage between the No. 12 terminal of the AcuraLink control unit (XM receiver) connector A (20P) and body ground.

**ACURALINK CONTROL UNIT (XM RECEIVER) CONNECTOR A (20P)**

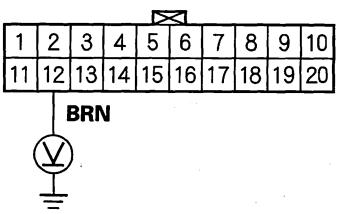


Wire side of female terminals

*Is there battery voltage?*

**YES**—Go to step 6.

**NO**—Repair open in the wire(s) between the AcuraLink control unit (XM receiver) and the No. 10 (7.5 A) fuse in the under-dash fuse/relay box. ■



BACK

Protected by AR

6. Measure the voltage between the No. 11 terminal of the AcuraLink control unit (XM receiver) connector A (20P) and body ground.

**ACURALINK CONTROL UNIT (XM RECEIVER) CONNECTOR A (20P)**

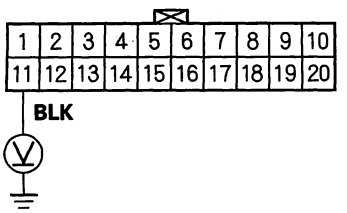


Wire side of female terminals

*Is there less than 1 V?*

**YES**—Check for loose wires or poor connections at the AcuraLink control unit (XM receiver) connector A (20P). If the connections are good, substitute a known-good AcuraLink control unit (XM receiver), and recheck. If the symptom goes away, replace the original AcuraLink control unit (XM receiver). ■

**NO**—Check for an open in the wire between the AcuraLink control unit (XM receiver) and body ground. If the wire is OK, check for poor ground at G505 (see page 22-60). ■

Protected by AR



## Component Location Index

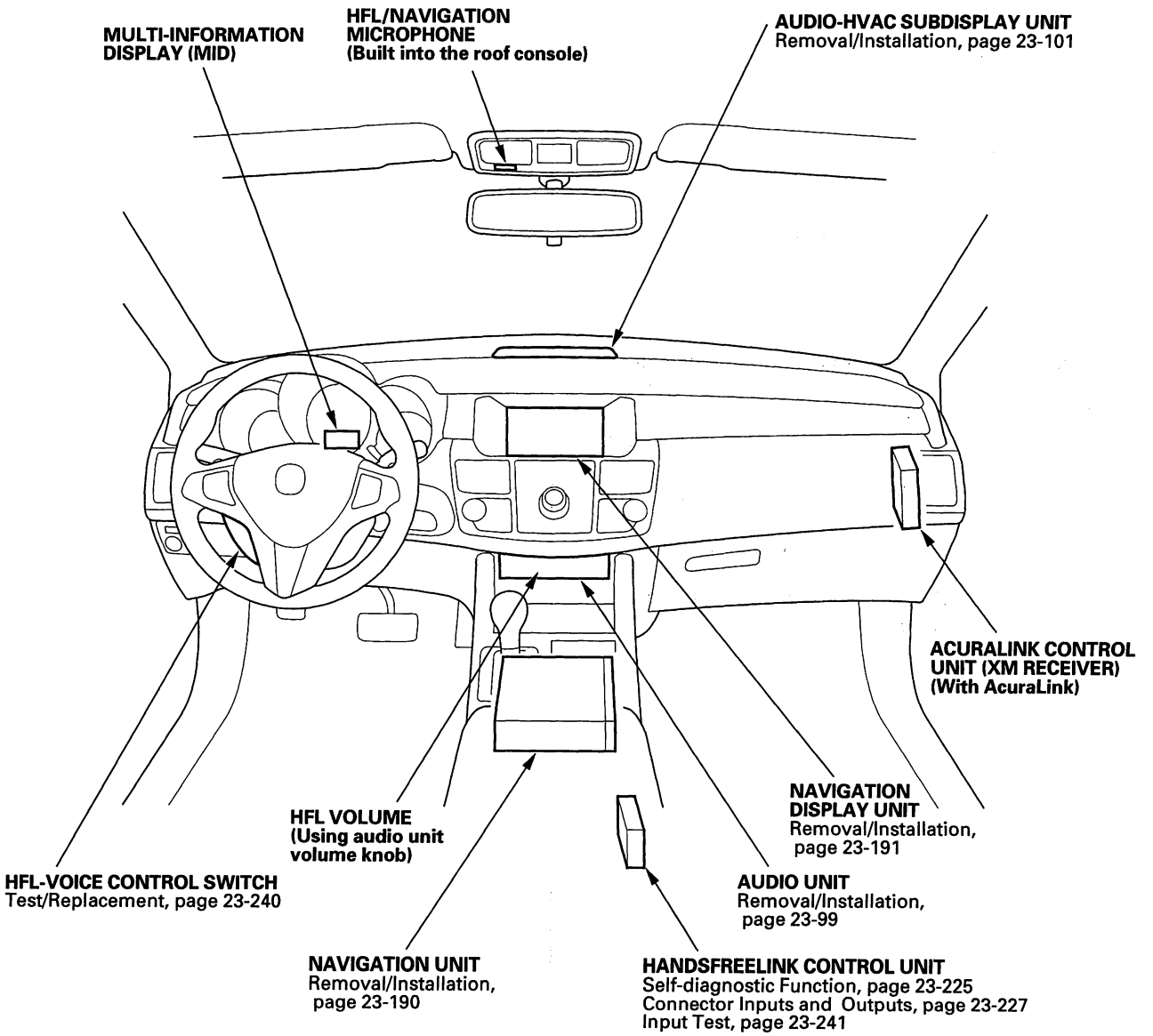




BACK

Protected by AR

# General Troubleshooting Information

The HandsFreeLink (HFL) works only with an approved Bluetooth enabled cell phones with the Hands Free Profile. If you are not sure if your cell phone is compatible with the HFL — and not all phones are — Acura has a dedicated call center and web-site to answer your questions. On the web, go to www.acura.com, or dial 888-528-7876 for further assistance. The call center is open Monday thru Friday from 6:00 a.m. to 6:00 p.m. CST, Saturday from 7:00 a.m. to 6:00 p.m. CST, and Sunday from 8:00 a.m. to 6:00 p.m. CST.

The HFL gives the user the convenience of hands-free operation. It can't control the phone's performance (call quality and signal strength). To avoid performance problems, don't put the phone in a metal briefcase or in a purse under the seat.

This guide shows you just a few of the HFL's many features. You will see how to pair your phone to the HFL and then make and receive calls, all using simple voice commands. If you want a complete description of this system, please refer to the owner's manual and quick start guide.

## Voice Control Tips

To give any voice command, press and release the TALK button. Always wait for the beep, then give your command in a clear, natural voice. The HFL microphone is on the ceiling, by the front spotlights.
If the HFL doesn't recognize your voice command, you'll hear "Pardon." If after repeating your command, it still doesn't recognize it, you'll hear "Please repeat." If after repeating your command again, it still doesn't recognize it, the HFL sends you to the Help menu.
To hear a list of available options at any time, say "Hands free help."
You can give many voice commands together. For example, you can say "Dial 123-456-7890."
To give a string of numbers in a call or dial voice command, you can say them all at once, or separate them into blocks of 3, 4, 7, 10, or 11.
To skip a voice prompt, press and release the TALK button while the HFL is speaking. The HFL begins listening for your next voice command.
To go back a step in a voice command sequence, press and release the Back button, or say "Go back."
If you don't say anything while the HFL is listening for your voice command, it will time out and stop its voice recognition. The next time you press and release the TALK button, the HFL begins listening from the point where it timed out.

To stop a voice command sequence at any time, press and hold the Back button, or press and release the TALK button, wait for the beep, and say "Cancel." The next time you press and release the TALK button, the HFL begins from its main menu. You'll see MAIN on the multi-information display (MID) in the instrument panel.
When you're done with a voice command sequence, the HFL goes back to its main menu. The next time you press and release the TALK button, you'll be at the main menu and you'll see MAIN on the MID.
Remember to press and hold the Back button until you exit the main menu, otherwise, the audio system stays muted.

The HFL may have problems with some voice. To improve voice recognition:
- Close the windows and moonroof.
- Set the fan speed to low (1 or 2).
- Adjust the air flow from the air conditioning vents so that they do not blow against the microphone on the ceiling.
- Speak in a clear and natural voice. If the system cannot recognize your command, speak louder.
- If the microphone picks up voices other than yours, the system may not interpret your voice commands correctly.
- If you speak with something in your mouth, or your voice is too husky, the system may misunderstand your command.

(cont'd)

Protected by AR



## General Troubleshooting Information (cont'd)

### Pairing Your Cell Phone (A One Time Procedure)

You must pair an approved Bluetooth compatible phone to the HFL before you can make and receive calls. The following steps show you what you need to do. For a current list of approved phones and specific phone pairing instructions, go to www.acura.com. You can also refer to the phone's operating manual or call the phone retailer. Make sure the vehicle is stationary when you pair the phone;

NOTE:
- You cannot pair a phone if the vehicle is moving.
- Your phone must be in its Discovery mode.
- Up to six Bluetooth compatible phones can be paired by the HFL.
- Not all Bluetooth phones are compatible with the HFL. For a current list of approved Bluetooth phones, visit www.acura.com.

1. Turn on your phone, and follow the prompts to activate Bluetooth.

2. Give these voice commands to the HFL by pressing the TALK button.

| You say | You'll hear |
|---|---|
| "Phone setup" | "Phone setup options are status, pair, edit, delete, and list." |
| "Pair" | "The pairing process requires operation of your mobile phone. For safety, only perform this function while the vehicle is stopped. State a four-digit code for pairing. Note this code, it will be requested by the phone." |
| "1. 2. 3. 4." (This can be any four-digit code you want.) | "1. 2. 3. 4. is this correct?" |
| "Yes" | "Searching for a Bluetooth phone. Make sure the phone you are trying to pair is in Discovery mode ! " |

3. Follow the cell phone manufacturer's instructions to put the phone in its Discovery mode. The phone will search for the HFL. When you see HANDSFREELINK in the device list on the phone, select it.

4. When prompted, enter the four-digit PIN from step 2 into the phone. You will hear the HFL say "A new phone has been found. Would you like to name this phone?"

5. Press and release the TALK button, and say what the phone name will be. For example, say "John's phone". You'll hear "John's phone has been successfully paired, returning to the main menu".

6. To pair another phone, repeat steps 1 thru 5.

### Clearing the system

NOTE:
- This operation clears the HFL system of all passcode(s), any paired phones, and all names in the HFL phonebook.
- Clearing the HFL system is recommend before selling the vehicle.

1. Turn on your phone, and follow the prompts to activate Bluetooth.

2. Press and release the TALK button. After the beep, say "Clear" and the HFL will respond, "This process will clear all paired phone, clear all entries in the phonebook, and clear the passcode. Is this what you would like to do?".

3. Press and release the TALK button. After the beep, say "Yes" and the HFL respond, "Preparing to clear all paired phone, all phonebook entries, and the passcode. This may take up to 2 minutes to complete".



BACK

Protected by AR

4. Press and release the TALK button. After the beep, say "OK" to proceed, or say "Go back" or "Cancel".

5. If you said "OK", after a short period of time, the HFL will respond, "System has been cleared. Returning to the main menu", the Clearing HFL system procedure is now complete.

### *Self-diagnostic Function*

NOTE: This procedure should be used only if HDS is unavailable.

To run the self-diagnostic function, do the following:

1. Turn the ignition switch ACC (I).

2. Press and hold the HFL BACK button for more than 5 seconds.

3. When the HandsFreeLink system enters the self-diagnostic function, the following will occur.

   - If the system has not completed testing for DTCs, the HandsFreeLink control unit audibly outputs "The hands free system test is in progress".
   - If there is no DTC, the HandsFreeLink control unit audibly outputs "The hands free system is OK".
   - If there is any DTC, the HandsFreeLink control unit audibly outputs "The hands free system needs to be serviced".

NOTE:
- The self-diagnostic function can only be initiated while the HFL is in its idle state.
- The self-diagnostic function is considered to start once the 5 seconds press and hold is detected, and ends when the units returns to idle state.

Protected by AR



## Symptom Troubleshooting Index

| Symptom | Diagnostic procedure | Also check for |
|---|---|---|
| The MID displays an HFL message that does not go away after pressing the HFL button | Symptom Troubleshooting (see page 23-239) | Check and repair all CAN related DTCs. |
| The phone icon in the navigation route to screen is grayed-out | There is no HFL-compatible phone paired to the vehicle. Pair an approved HFL-compatible phone to the vehicle | The phone must be on the list of approved Bluetooth phones and configured correctly. For a current list of approved phones, go to www.acura.com, or call 888-528-7876 for further assistance. |
| The approved Bluetooth phone is having problems pairing to the vehicle | HFL System Troubleshooting (see page 23-230) | The phone must be on the list of approved Bluetooth phones and configured correctly. For a current list of approved phones, go to www.acura.com, or call 888-528-7876 for further assistance. |
| The Bluetooth phone cannot use all its functions | HFL System Troubleshooting (see page 23-230) | The phone must be on the list of approved Bluetooth phones and configured correctly. For a current list of approved phones, go to www.acura.com, or call 888-528-7876 for further assistance. |
| The Bluetooth phone does not place or receive calls using the HFL system | HFL System Troubleshooting (see page 23-230) | The phone must be on the list of approved Bluetooth phones and configured correctly. For a current list of approved phones, go to www.acura.com, or call 888-528-7876 for further assistance. |
| The client wants the HFL system reset (all phones and address information cleared from the HFL system) | Clearing the system (see page 23-224) | See the Owner's Manual for Additional information. |
| The HFL system is locked and the pass code has been lost or forgotten | Symptom Troubleshooting (see page 23-239) | |
| The HFL system does not recognize all voice prompts | HFL System Troubleshooting (see page 23-230) | Also see "Voice control tips" (see page 23-223). |
| The HFL system speaks in French | See the HFL section in the Owner's Manual for "Changing Language" | |



BACK

Protected by AR

# System Description

## HandsFreeLink Control Unit Inputs and Outputs

When replacing an HandsFreeLink control unit connector, match the wires to the cavities listed in the following table.

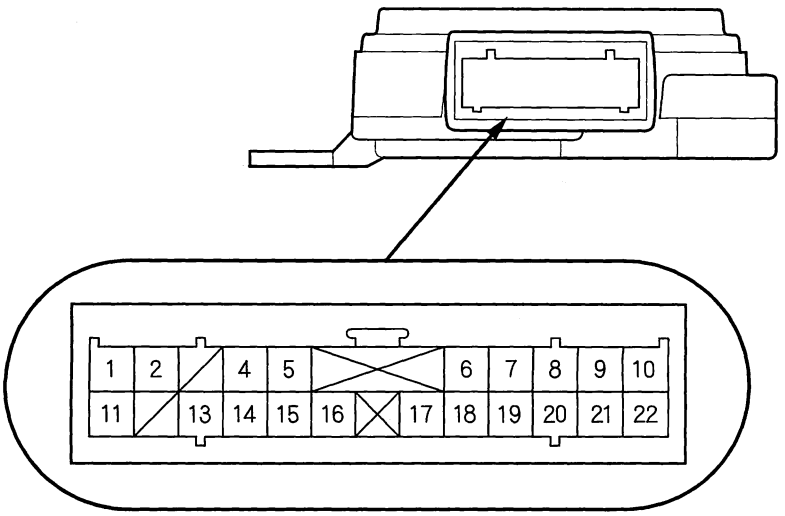


| Cavity | Wire | Connects to |
|---|---|---|
| 1 | PUR | ACC (HandsFreeLink control unit power supply) |
| 2 | BLU | HFL-voice control switch (STRG SW) |
| 3 | ——— | Not used |
| 4 | LT GRN | Audio unit (HFL MUTE) |
| 5 | WHT | AcuraLink control unit (XM receiver) (HIP/NAVI COMM3)*1 Navigation unit (HFL COMM3)*2 |
| 6 | GRY | Shielding (TELM SIG SH) |
| 7 | GRN | Audio unit, AcuraLink control unit (XM receiver)*1 (TELM SIG+) |
| 8 | LT BLU | Audio unit (HFL ICON) |
| 9 | GRN | HFL-navigation microphone (MIC SIG+) |
| 10 | RED | HFL-navigation microphone (MIC SIG−) |
| 11 | GRN | Constant power |
| 12 | ——— | Not used |
| 13 | BLK | Ground (G502) |
| 14 | PNK | B-CAN |
| 15 | RED | AcuraLink control unit (XM receiver) (HIP/NAVI COMM4)*1 Navigation unit (HFL COMM4)*2 |
| 16 | GRN | AcuraLink control unit (XM receiver) (HIP/NAVI COMM1)*1 Navigation unit (HFL COMM1)*2 |
| 17 | BLK | AcuraLink control unit (XM receiver) (HIP/NAVI COMM2)*1 Navigation unit (HFL COMM2)*2 |
| 18 | GRY | Shielding (HIP/NAVI COMM SH)*1 (HFL COMM SH)*2 |
| 19 | RED | Audio unit, AcuraLink control unit (XM receiver)*1 (TELM SIG−) |
| 20 | GRY | Shielding (MIC SH) |
| 21 | BLU | Navigation unit (MIC OUT+) |
| 22 | PNK | Navigation unit (MIC OUT−) |

* 1: USA models
* 2: Canada models

Protected by AR

# HandsFreeLink System

## Circuit Diagram

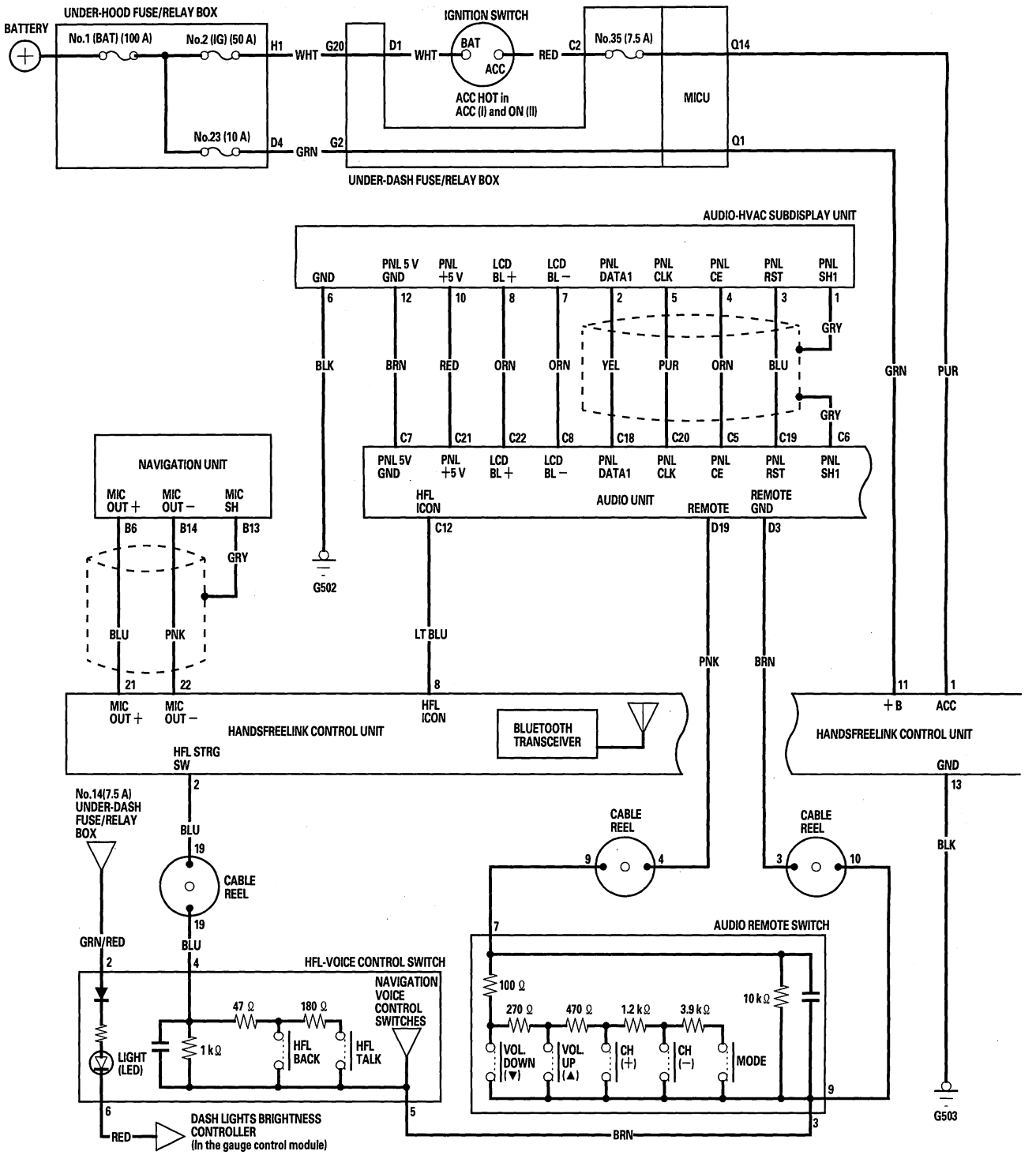




BACK

Protected by AR

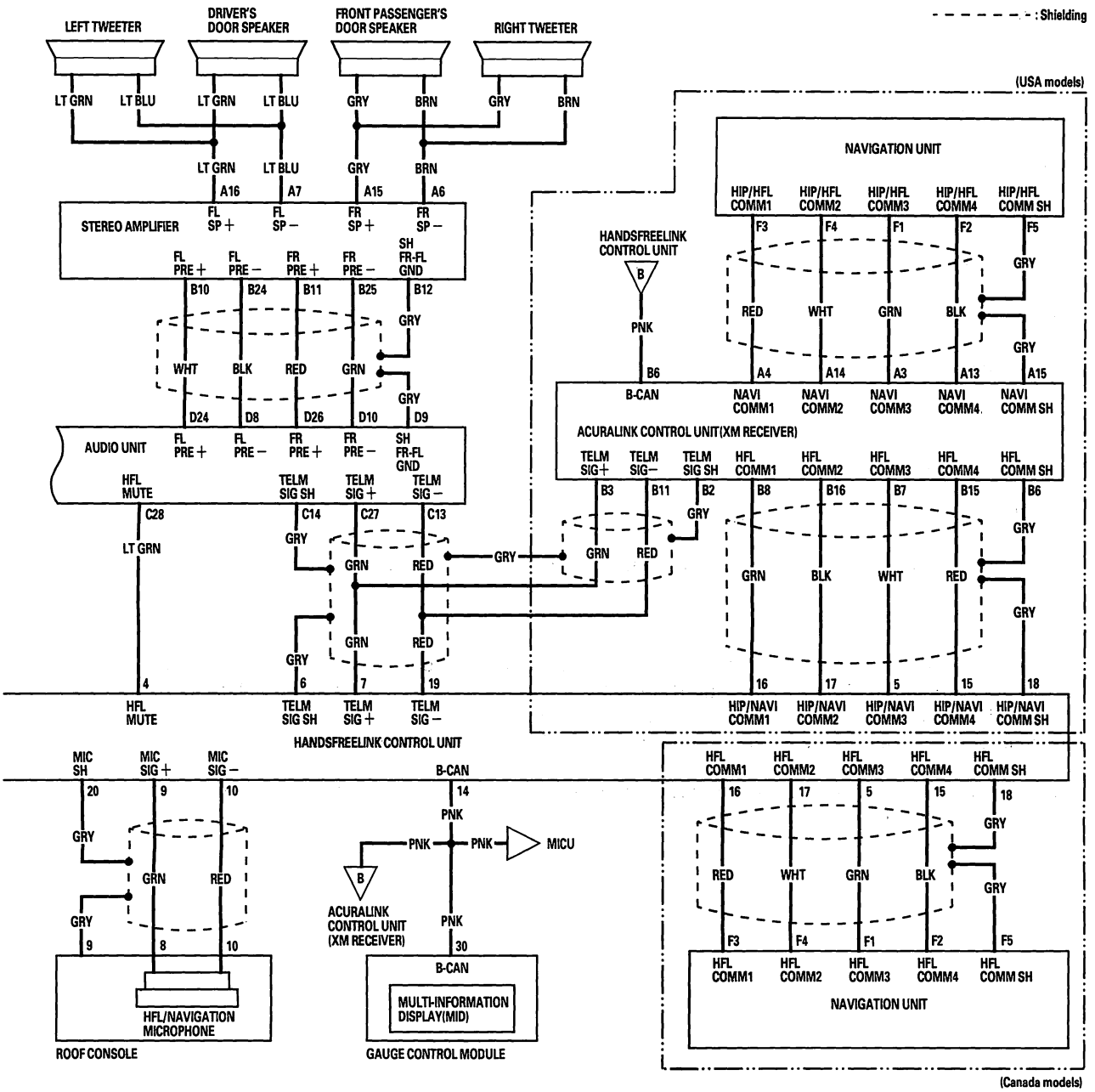

Protected by AR



## HFL System Troubleshooting

NOTE:
- You must be able to duplicate the client's concern to successfully diagnose and the problem.
- Always use the client's phone.
- Make sure the phone is approved and configured correctly. Online, go to www.acura.com, or call the HFL support desk at 888-528-7876 for further assistance.

1. Connect the HDS to the DLC (see page 11-3).

2. Turn the ignition switch ON (II).

3. Check for DTCs.

   *Are any DTCs indicated?*

   **YES**—Repair the indicated DTCs and recheck. ■

   **NO**—Go to step 4.

4. Try to duplicate the problem.

   *Can you duplicate the problem?*

   **YES**—Go to step 5.

   **NO**—The system is OK at this time. ■

5. Pair the phone to a known-good vehicle (same model, year, and trim), and try to duplicate the problem.

   *Does the phone have the same problem on the known-good vehicle?*

   **YES**—Call the HFL support desk at 888-528-7876 to make sure the phone is configured correctly and has the correct software. If the phone is configured correctly, it is either a characteristic of the HFL system, or a characteristic of the particular approved phone being used. Explain to your client that this is a system characteristic. Another phone from the approved phone list may give more favorable results. ■

   **NO**—Substitute a Known-good HandsFreeLink control unit and recheck. If the problem goes away, replace the original HandsFreeLink control unit. ■



BACK

Protected by AR



## DTC B1775: Microphone Input/Output Short to Power/Open

1. Connect the HDS to the DLC (see page 11-3).
2. Clear the DTCs with the HDS.
3. Turn the ignition switch OFF, and then back ON (II).
4. Check for DTCs with the HDS.

   *Is DTC B1775 indicated?*

   **YES**—Go to step 5.

   **NO**—Intermittent failure, the system is OK at this time.■

5. Turn the ignition switch OFF.
6. Remove the roof console (see page 22-196) and the passenger's console trim (see page 20-92).
7. Disconnect the 20P connector from the roof console and the 22P connector from the HandsFreeLink control unit.
8. Turn the ignition switch ON (II).
9. Measure the voltage between HandsFreeLink control unit 22P connector terminal No. 9 and body ground.

**HANDSFREELINK CONTROL UNIT 22P CONNECTOR**

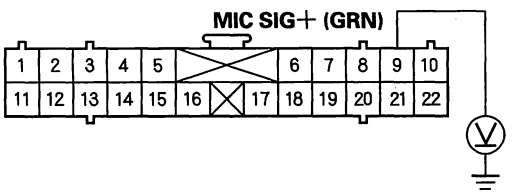


Wire side of female terminals

*Is there battery voltage?*

**YES**—Repair short to power in the wire between the HandsFreeLink control unit and the roof console.■

**NO**—Go to step 10.

10. Turn the ignition switch OFF.
11. Check for continuity between HandsFreeLink control unit 22P connector terminal No. 9 and roof console 20P connector terminal No. 8.

**HANDSFREELINK CONTROL UNIT 22P CONNECTOR**
Wire side of female terminals

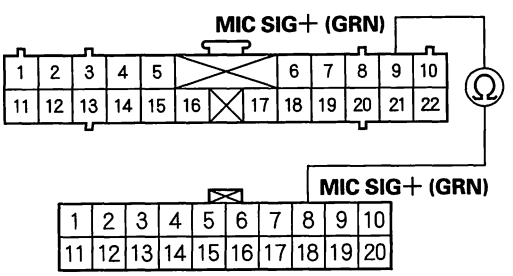


**ROOF CONSOLE 20P CONNECTOR**
Wire side of female terminals

*Is there continuity?*

**YES**—Go to step 12.

**NO**—Repair open in the wire between the HandsFreeLink control unit and the roof console.■

(cont'd)

Protected by AR



## DTC Troubleshooting (cont'd)

12. Disconnect connector B (14P) from the navigation unit.

13. Turn the ignition switch ON (II).

14. Measure the voltage between HandsFreeLink control unit 22P connector terminal No. 21 and body ground.

**HANDSFREELINK CONTROL UNIT 22P CONNECTOR**

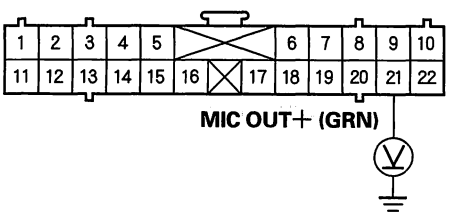


Wire side of female terminals

*Is there battery voltage?*

**YES**—Repair short to power in the wire between the HandsFreeLink control unit and the navigation unit.■

**NO**—Substitute a known-good roof console, then recheck. If the symptom goes away, replace the original roof console.■

### DTC B1776: Microphone Input/Output Short to Ground/Open

1. Connect the HDS to the DLC (see page 11-3).

2. Clear the DTCs with the HDS.

3. Turn the ignition switch OFF, and then back ON (II).

4. Check for DTCs with the HDS.

   *Is DTC B1776 indicated?*

   **YES**—Go to step 5.

   **NO**—Intermittent failure, the system is OK at this time.■

5. Turn the ignition switch OFF.

6. Remove the roof console (see page 22-196) and the passenger's console trim cover (see page 20-92).

7. Disconnect the 20P connector from the roof console and the 22P connector from the HandsFreeLink control unit.



BACK

Protected by AR

8. Check for continuity between body ground and the No. 9 and No. 10 terminals of the HandsFreeLink control unit 22P connector individually, then check for continuity between same terminals and HandsFreeLink control unit 22P connector terminal No. 20 (harness shield).

**HANDSFREELINK CONTROL UNIT 22P CONNECTOR**

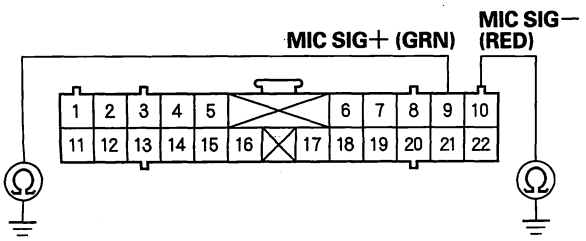


Wire side of female terminals

*Is there continuity?*

**YES**—Repair short in the wires between the HandsFreeLink control unit and the roof console or body ground.■

**NO**—Go to step 9.

9. Disconnect the 14P connector from the navigation unit.

10. Check for continuity between HandsFreeLink control unit 22P connector terminal No. 22 and body ground.

**HANDSFREELINK CONTROL UNIT 22P CONNECTOR**

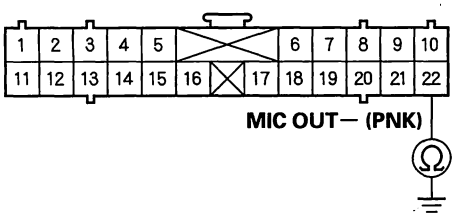


Wire side of female terminals

*Is there continuity?*

**YES**—Repair short to body ground in the wire between the HandsFreeLink control unit and the navigation unit.■

**NO**—Substitute a known-good navigation unit, then recheck. If the symptom goes away, replace the HandsFreeLink control unit.■

Protected by AR



## DTC Troubleshooting (cont'd)

### DTC B1779: HFL Switch or HFL-Voice Control Switch (HFL TALK/HFL BACK Buttons) Circuit Open/Short to Power

1. Connect the HDS to the DLC (see page 11-3).
2. Clear the DTCs with the HDS.
3. Turn the ignition switch OFF, then start the vehicle and turn the steering wheel back and forth several times.
4. Check for DTCs with the HDS.

   *Is DTC B1779 indicated?*

   **YES**—Go to step 5.

   **NO**—Intermittent failure, the system is OK at this time.■

5. Turn the ignition switch OFF.
6. Do the HFL-voice control switch test (see page 23-240).

   *Is the switch OK?*

   **YES**—Go to step 7.

   **NO**—Replace the HFL-voice control switch (see page 23-240).■

7. Remove the passenger's console trim (see page 20-92).
8. Disconnect the 22P connector from the HandsFreeLink control unit.
9. Disconnect the 6P connector from the HFL-voice control switch.
10. Check for continuity between the HandsFreeLink control unit 22P connector terminal No. 2 and HFL-voice control switch 7P connector terminal No. 4.

**HANDSFREELINK CONTROL UNIT 22P CONNECTOR**
Wire side of female terminals

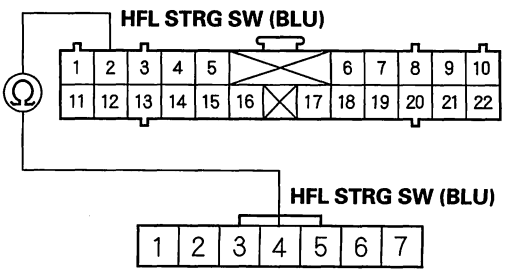


**HFL-VOICE CONTROL SWITCH 7P CONNECTOR**
Wire side of female terminals

*Is there continuity?*

**YES**—Go to step 11.

**NO**—Repair an open in the BLU wire between the switch, cable reel, and HandsFreeLink control unit.■



BACK

Protected by AR

11. Turn the ignition switch ON (II).

12. Measure the voltage between HandsFreeLink control unit 22P connector terminal No. 2 and body ground.

**HANDSFREELINK CONTROL UNIT 22P CONNECTOR**

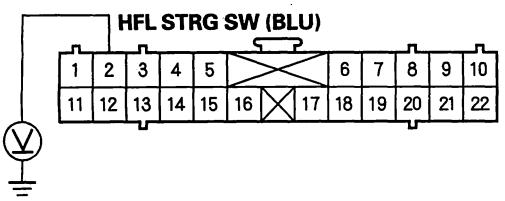


Wire side of female terminals

*Is there voltage?*

**YES**—Repair short to body ground in the wire between the HandsFreeLink control unit and the HFL-voice control switch. ■

**NO**—Go to step 13.

13. Turn the ignition switch OFF.

14. Check for continuity between HFL-voice control switch 7P connector terminal No. 5 and body ground.

**HFL-VOICE CONTROL SWITCH 7P CONNECTOR**

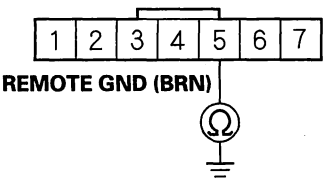


Wire side of female terminals

*Is there continuity?*

**YES**—Replace the HandsFreeLink control unit. ■

**NO**—Repair open in the wire between the switch, cable reel, and the audio unit. ■

Protected by AR



## DTC Troubleshooting (cont'd)

### DTC B1780: HFL-Voice Control Switch (HFL TALK/HFL BACK Buttons) Circuit Short

1. Connect the HDS to the DLC (see page 11-3).
2. Clear the DTCs with the HDS.
3. Turn the ignition switch OFF, then start the vehicle and turn the steering wheel back and forth several times.
4. Check for DTCs with the HDS.

   *Is DTC B1780 indicated?*

   **YES**—Go to step 5.

   **NO**—Intermittent failure, the system is OK at this time. ■

5. Turn the ignition switch OFF.
6. Do the HFL-voice control switch test (see page 23-240).

   *Is the switch OK?*

   **YES**—Go to step 7.

   **NO**—Replace the HFL-voice control switch (see page 23-240). ■

7. Remove the passenger's console trim (see page 20-92).
8. Disconnect the 22P connector from the HandsFreeLink control unit.
9. Check for continuity between HandsFreeLink control unit 22P connector terminal No. 2 and body ground.

**HANDSFREELINK CONTROL UNIT 22P CONNECTOR**

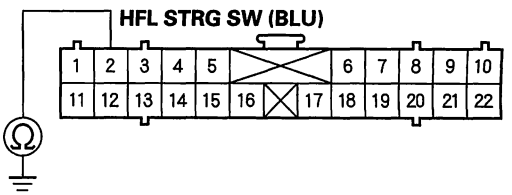


Wire side of female terminals

*Is there continuity?*

**YES**—Repair short in the wire between the HandsFreeLink control unit and the HFL-voice control switch. ■

**NO**—Go to step 10.



BACK

Protected by AR

10. Reconnect the HandsFreeLink control unit 22P connector.

11. Turn the ignition switch ON (II).

12. Measure the voltage between HandsFreeLink control unit 22P connector terminal No. 2 and body ground.

**HANDSFREELINK CONTROL UNIT 22P CONNECTOR**

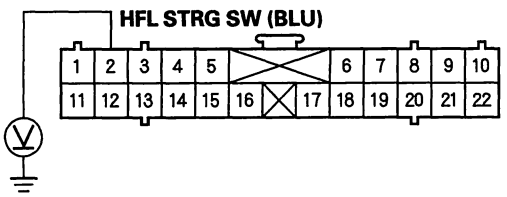


Wire side of female terminals

*Is there voltage?*

**YES**—Replace the HandsFreeLink control unit. ■

**NO**—Check the No. 35 (7.5 A) fuse in the under-dash fuse/relay box. If the fuse is OK, check for an open in the wire between the under-dash fuse/relay box and the HandsFreeLink control unit. If the wire is OK, replace the HandsFreeLink control unit. ■

Protected by AR



## DTC Troubleshooting (cont'd)

**DTC B1792:** HandsFreeLink Control Unit Internal Error

1. Connect the HDS to the DLC (see page 11-3).
2. Clear the DTCs with the HDS.
3. Turn the ignition switch OFF, and then back ON (II).
4. Check for DTCs with the HDS.

   *Is DTC B1792 indicated?*

   **YES**—Replace the HandsFreeLink control unit. ■

   **NO**—Intermittent failure, the system is OK at this time. ■



BACK

Protected by AR

## Symptom Troubleshooting

### The MID displays an HFL message that does not go away after pressing the HFL button

1. Connect the HDS to the DLC (see page 11-3).
2. Clear the DTCs with the HDS.
3. Turn the ignition switch OFF, and then ON (II).
4. Check the DTCs.

   *Are there any DTCs indicate?*

   **YES**—Repair the indicated DTCs.■

   **NO**—Go to step 5.
5. Turn the ignition switch OFF.
6. Substitute known-good HandsFreeLink control unit, then turn the ignition switch ON (II) and recheck the MID.

   *Are the messages cleared?*

   **YES**—Replace the original HandsFreeLink control unit.■

   **NO**—Replace the gauge control module.■

### The HFL system is locked and the pass code has been lost or forgotten

1. Connect the HDS to the DTC (see page 11-3).
2. Turn the ignition switch ON (II).
3. From the "Body Electrical menu", then select "HandsFreeLink".
4. Select "Miscellaneous Tests", then select "Pass code reset".
5. Follow the HDS system prompts to reset the pass code.

Protected by AR



## HFL-Voice Control Switch Test/Replacement

1. Remove the steering wheel (see page 17-22).
2. Remove the HFL-voice control switch (see page 17-23).

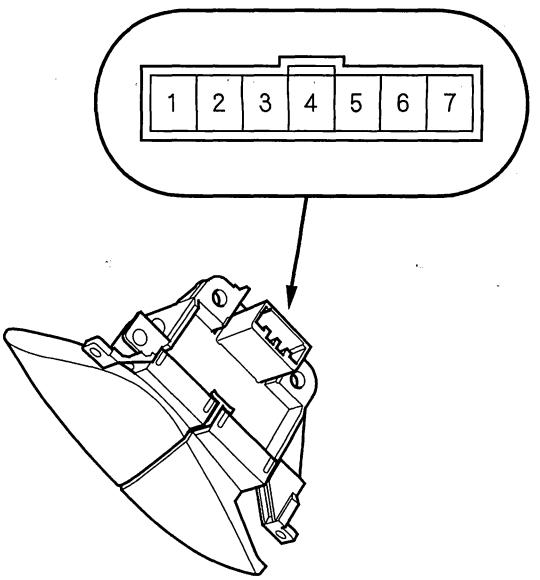


3. Measure resistance between the No. 4 and No. 5 terminals in each switch position according to the table.

**HFL-Voice Control Switch**

| Position | Resistance |
|---|---|
| OFF | About 1 kΩ |
| HFL TALK button pressed | About 227 kΩ |
| HFL BACK button pressed | About 47 kΩ |

4. If the resistance is not as specified, replace the switch.



BACK

Protected by AR

## Control Unit Input Test

1. Remove the passenger's console trim (see page 20-92).
2. Disconnect the 22P connector (A) from the HandsFreeLink control unit (B).

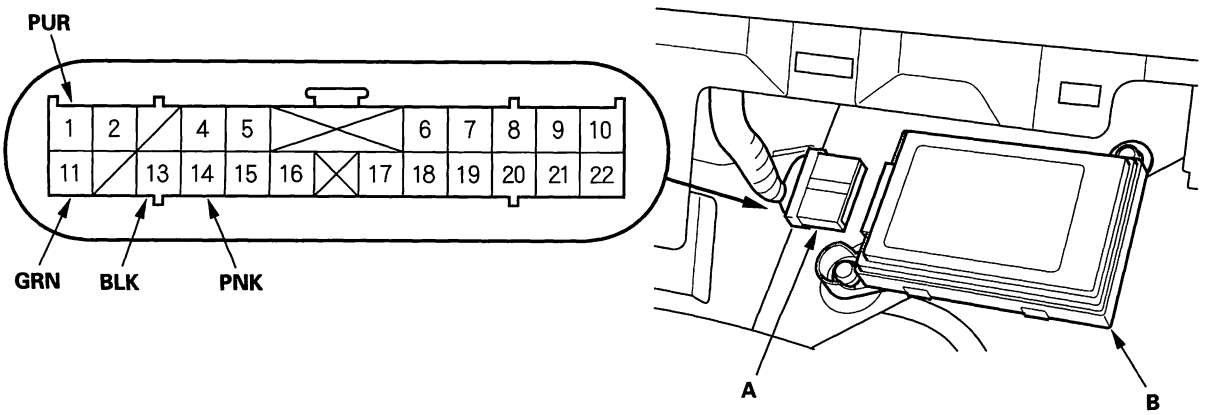


3. Inspect the connector and socket terminals for a good pinfit to be sure they are all making good contact.
   - If the terminals are bent, loose or corroded, repair them as necessary, and recheck the system.
   - If the terminals look OK, go to step 4.
4. Reconnect the connector, and make these input tests at the connector.
   - If any test indicates a problem, find and correct the cause, then recheck the system.
   - If all the input tests prove OK, go to step 5.

| Cavity | Wire | Test condition | Test: Desired result | Possible cause if result is not obtained |
|---|---|---|---|---|
| 13 | BLK | Under all conditions | Measure the voltage to ground: There should be less than 1 V. | • Poor ground (G503)<br>• An open in the wire |
| 11 | GRN | Under all conditions | Measure the voltage to ground: There should be battery voltage. | • Blown No. 23 (10 A) fuse in the under-hood fuse/relay box<br>• An open in the wire |
| 1 | PUR | Ignition switch ACC (I) or ON (II) | Measure the voltage to ground: There should be battery voltage. | • Blown No. 35 (7.5 A) fuse in the under-dash fuse/relay box<br>• An open in the wire |

5. Disconnect the 22P connector again, and make this input test at the connector.
   - If the test indicates a problem, find and correct the cause, then recheck the system.
   - If the input test proves OK, the HandsFreeLink control unit must be faulty, replace it.

| Cavity | Wire | Test condition | Test: Desired result | Possible cause if result is not obtained |
|---|---|---|---|---|
| 14 | PNK | Under all conditions | Check for continuity between No. 14 terminal and the gauge control module 36P connector terminal No. 30: There should be continuity. | An open in the wire |
| | | Gauge control module 36P connector disconnected | Check for continuity to ground: There should be no continuity. | Short to ground |

Protected by AR

BACK

Protected by AR

# Restraints


## Restraints
Special Tools ..... 24-2

## Seat Belts
Component Location Index ..... 24-3
Front Seat Belt Replacement ..... 24-4
Rear Seat Belt Replacement ..... 24-7
Inspection ..... 24-10

## SRS (Supplemental Restraint System)
Component Location Index ..... 24-12
Precautions and Procedures ..... 24-14
General Troubleshooting Information ..... 24-24
ODS Unit Initialization ..... 24-28
ODS Unit Calibration ..... 24-29
ODS Unit Operation Check ..... 24-30
Driver's Seat Position Sensor Operation Check ..... 24-31
DTC Troubleshooting Index ..... 24-32
Symptom Troubleshooting Index ..... 24-37
System Description ..... 24-38
Circuit Diagram ..... 24-44
DTC Troubleshooting ..... 24-48
Symptom Troubleshooting ..... 24-140
Component Replacement/Inspection After Deployment ..... 24-143
Driver's Airbag Replacement ..... 24-146
Front Passenger's Airbag Replacement ..... 24-147
Side Airbag Replacement ..... 24-149
Side Curtain Airbag Replacement ..... 24-150
Airbag and Tensioner Disposal ..... 24-154
Cable Reel Replacement ..... 24-158
SRS Unit Replacement ..... 24-161
Side Impact Sensor (First) Replacement ..... 24-162
Side Impact Sensor (Second) Replacement ..... 24-163
Roll Rate Sensor Replacement ..... 24-164
Front Passenger's Weight Sensor Replacement ..... 24-165
ODS Unit Replacement ..... 24-167
Front Impact Sensor Replacement ..... 24-168
Driver's Seat Position Sensor Replacement ..... 24-169
Passenger's Airbag Cutoff Indicator Illumination Bulb Test ..... 24-170

Protected by AR

# Restraints

## Special Tools

| Ref. No. | Tool Number | Description | Qty |
|---|---|---|---|
| ①*1 | 07HAZ-SG00500 | Deployment Tool | 1 |
| ② | 07PAZ-001010A | SCS Service Connector | 1 |
| ③ | 07SAZ-TB4011A | SRS Inflator Simulator | 1 |
| ④*2 | 07TAZ-001020A | Backprobe Adapter, 17 mm | 2 |
| ⑤ | 070AZ-SNAA100 | SRS Simulator Lead J | 1 |
| ⑥ | 070AZ-SNAA200 | SRS Simulator Lead K | 1 |
| ⑦ | 070AZ-SNAA300 | SRS Simulator Lead L | 1 |
| ⑧ | 070AZ-SAA0100 | SRS Short Canceller | 2 |

* 1: Included in SRS Tool Set 07MAZ-SM5000B
* 2: Use with the stacking patch cords from T/N 07SAZ-001000A, Backprobe Set.

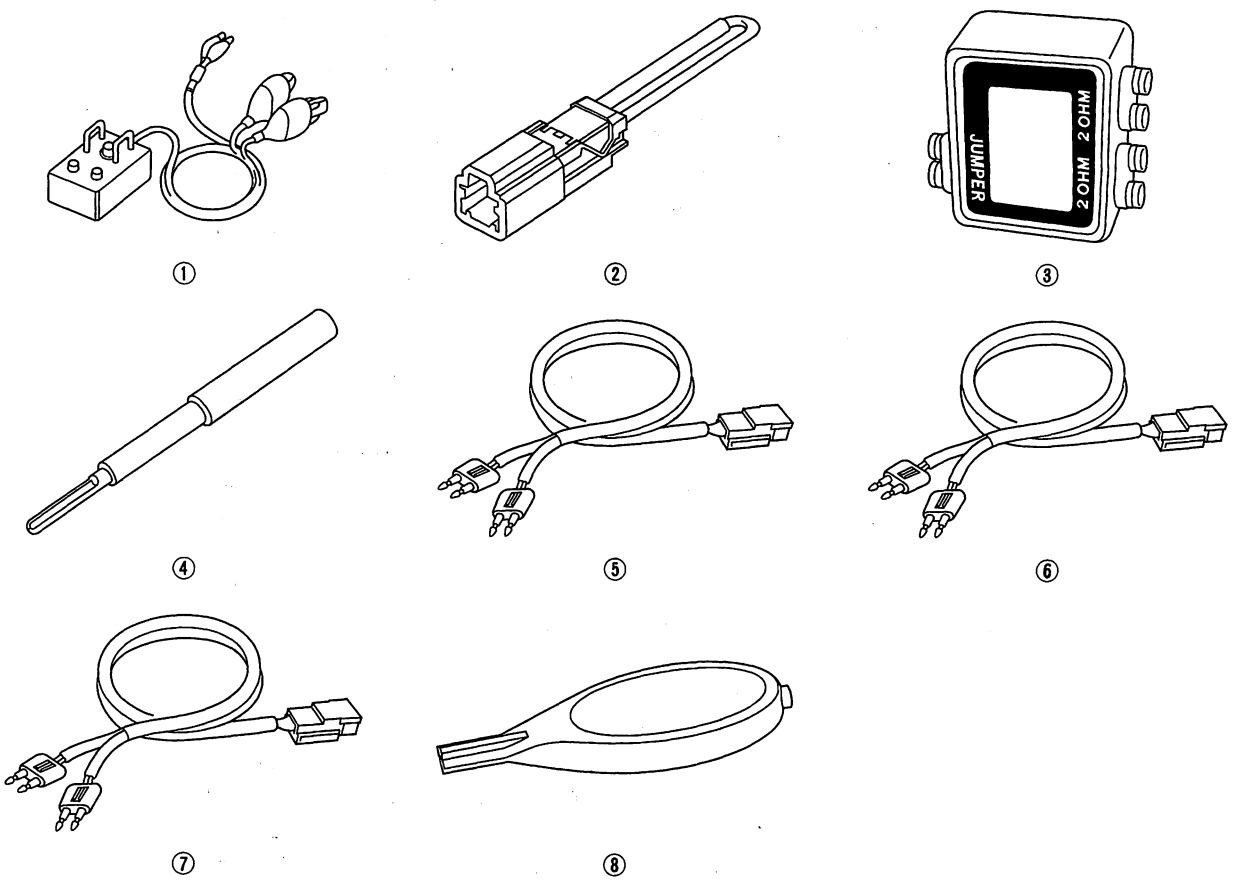




BACK

Protected by AR



## Component Location Index

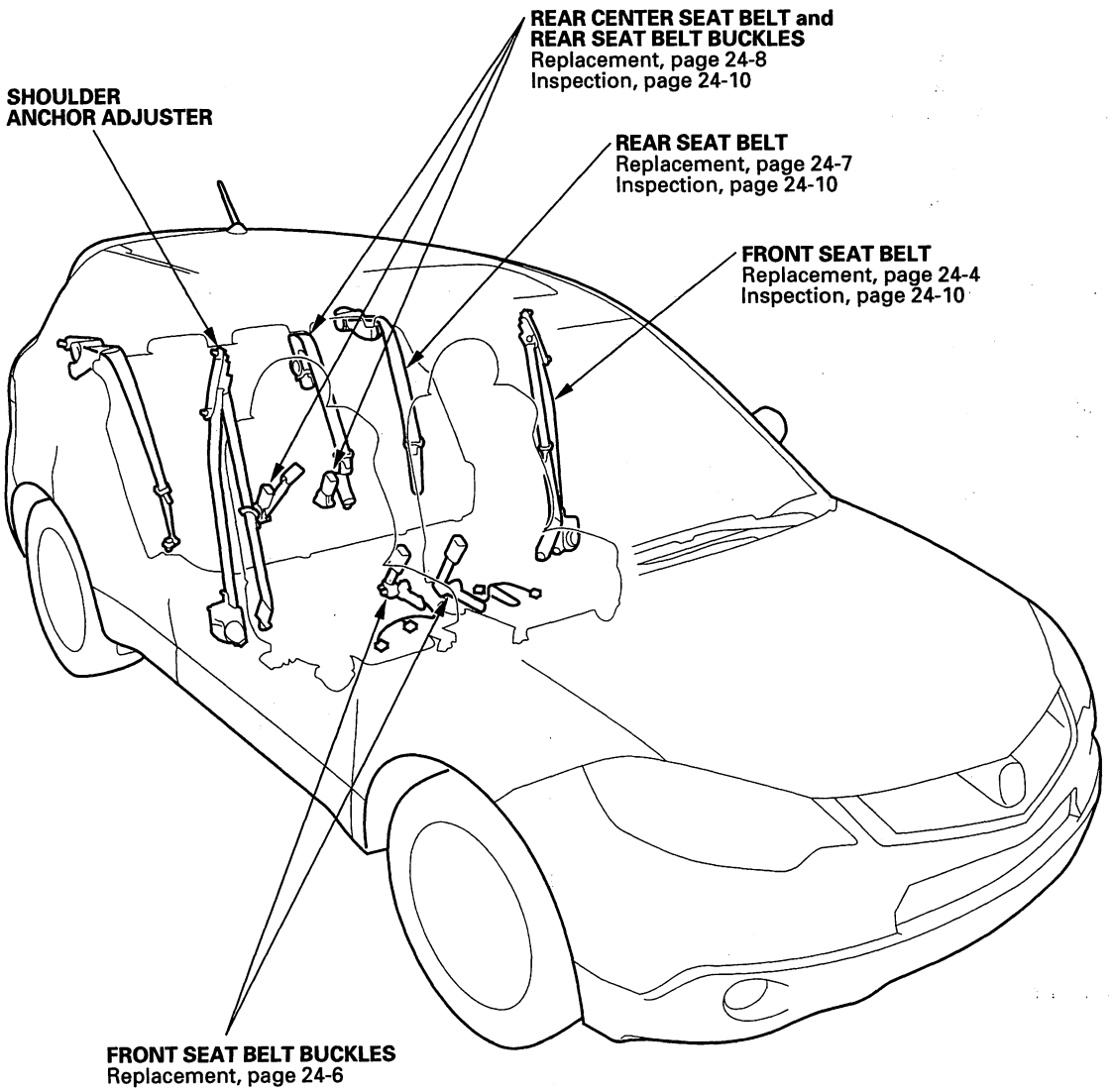


BACK

Protected by AR



## Front Seat Belt Replacement

SRS components are located in this area. Review the SRS component locations (see page 24-12) and the precautions and procedures (see page 24-14) before doing repairs or service.

NOTE: Check the front seat belts for damage (see page 24-10), and replace them if necessary.

### Front Seat Belt

1. Make sure you have the anti-theft codes for the audio and the navigation system (if equipped), then write down the audio presets.

2. Slide the front seat forward fully, then move to lowest position (driver's seat). Remove the anchor cover (A).

3. Slide the front seat forward fully, then move it to the lowest position (driver's seat).
   Driver's seat: Carefully push in on the bottom edge of the anchor cover (A) to replace the lock tab (B) then side the cover up to replace the hooks (C), and remove the cover.
   Passemger's seat: Carefully pry up on the bottom edge of the anchor cover (D) to release the hooks (E), and remove the cover.

   **Driver's seat**

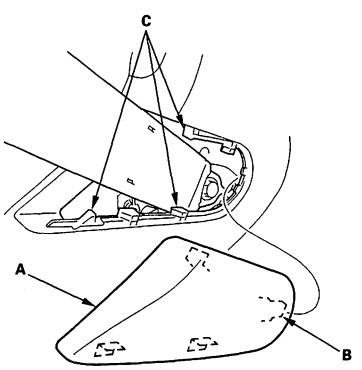


   **Passenger's seat**

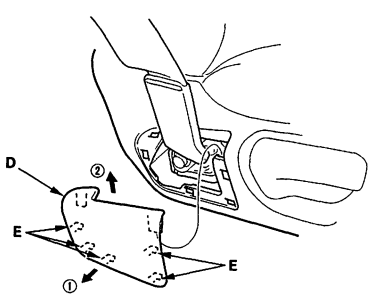


4. Remove the lower anchor bolt (A).

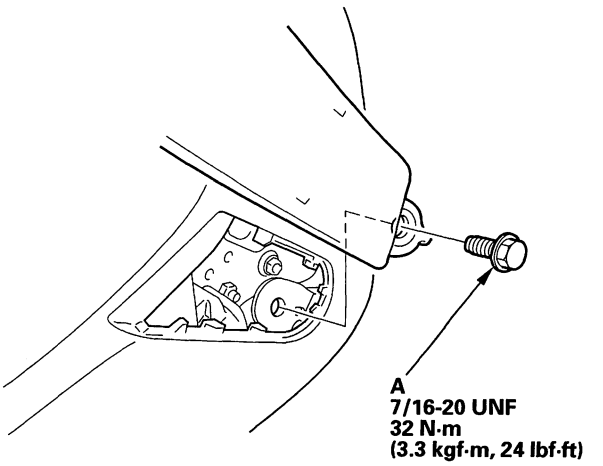


5. Remove the B-pillar lower trim (see page 20-72).

6. Remove the B-pillar upper trim and slider (see page 20-72).

7. Remove the upper anchor bolt (A).

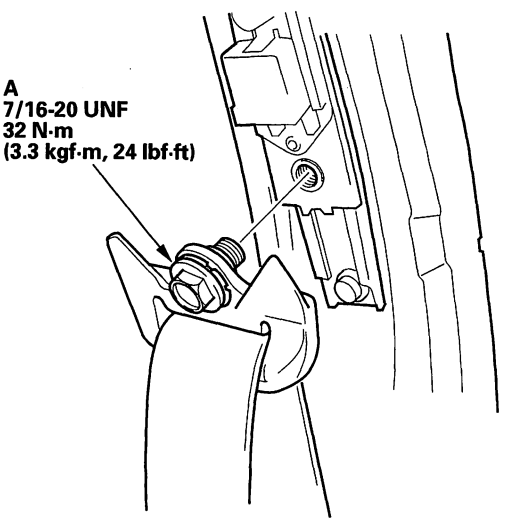




BACK

Protected by AR

8. Disconnect the seat belt tensioner connector (A). Remove the upper retractor mounting bolt (B) and the lower retractor bolt (C), then remove the front seat belt (D) and retractor (E).

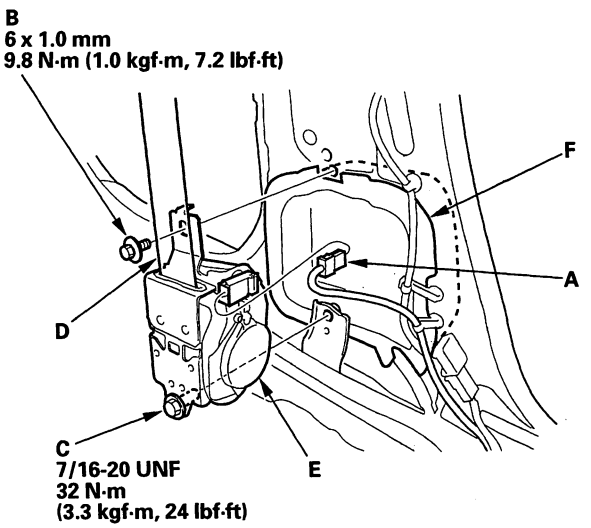


9. If necessary, remove the front seat belt protector (F).

10. Remove the shoulder anchor adjuster (A).

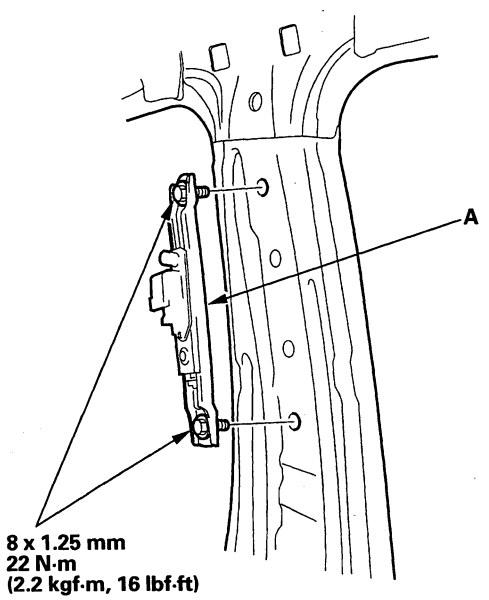


11. Install the seat belt in the reverse order of removal, and note these items:

- Apply medium strength type liquid thread lock to the anchor bolts before reinstallation.
- Tighten the bolts by hand first, then tighten to the specified torque.
- Check that the retractor locking mechanism functions as described (see page 24-10).
- Assemble the washer, collar and bushing on the upper anchor bolt as shown.
- If the seat belt tensioner has been deployed, replace the front seat belt protector with a new one.
- Before installing the anchor bolts, make sure there are no twists or kinks in the seat belt.
- Make sure the seat belt tensioner is properly plugged in.
- Reconnect the negative cable to the battery.
- Enter the anti-theft codes for the audio or navigation system, then enter the audio presets.
- Set the clock.
- Check for any DTCs that may have been set during repairs, and clear them.

**Upper anchor bolt installation**

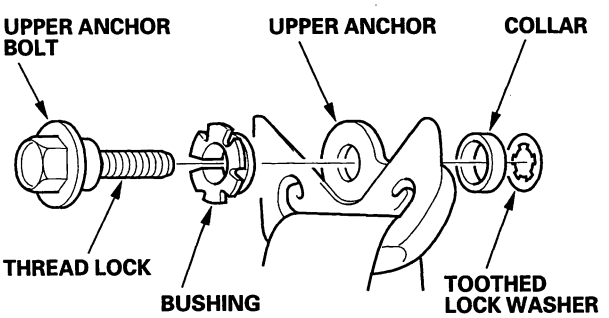


(cont'd)

Protected by AR



## Front Seat Belt Replacement (cont'd)

### Front Seat Belt Buckle

1. Make sure you have the anti-theft code for the audio and the navigation system (if equipped), and then write down the audio presets.

2. Disconnect the negative cable from the battery, and wait at least 3 minutes before beginning work.

3. Remove the front seat (see page 20-118).

4. Lift up the front seat, then detach the seat belt switch connecter (A) and seat belt buckle tensioner connector (B), detach the harness clip (C), and release the harness band (D).

**Driver's seat**

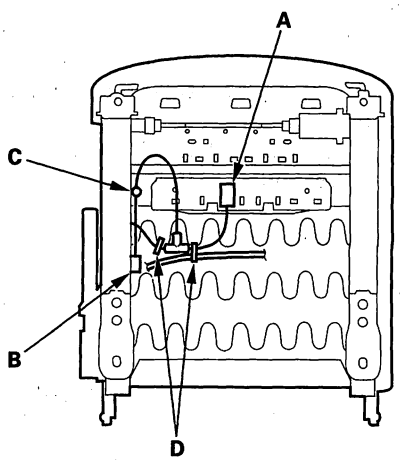


**Passenger's seat**

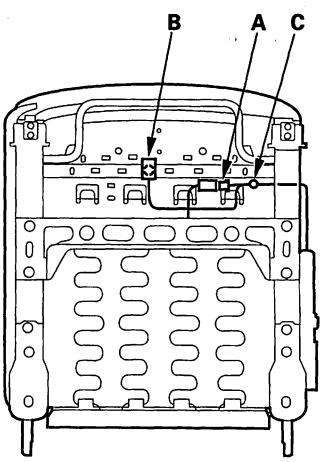


5. Remove the center anchor bolt (A), then remove the seat belt buckle (B) from the elastic band (C).

**Driver's seat**

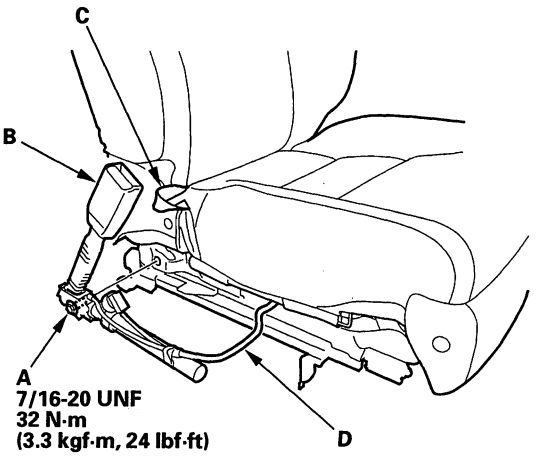


**Passenger's seat**

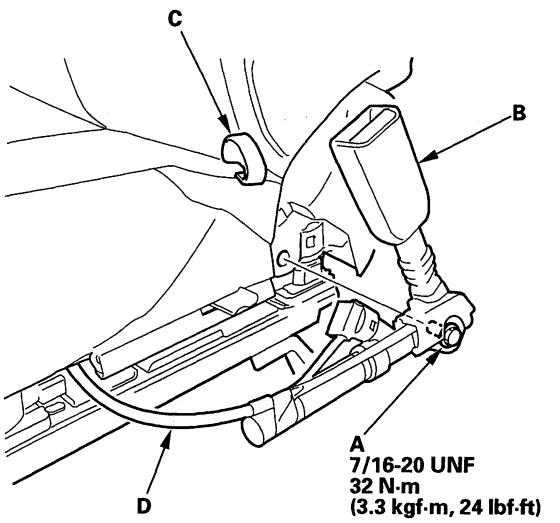


6. Pull the seat belt switch harness (D) out through the space between the seat cushion and the seat track (driver's seat), or through the hole in the seat track (passenger's seat).



BACK

Protected by AR

7. Install the buckle in the reverse order of removal, and note these items:

   - Assemble the washers, collar on the center anchor bolt as shown.
   - Apply medium strength type liquid thread lock to the center anchor bolt before reinstallation.
   - Tighten the bolts by hand first, then tighten to specification with a torque wrench.
   - Make sure the seat belt switch connector and seat belt buckle tensioner connector are plugged in properly.
   - Reconnect the negative cable to the battery.
   - Enter the anti-theft codes for the audio or the navigation system, and then enter the audio presets.
   - Set the clock.
   - Check for any DTCs that may have been set during repairs, and clear them.

**Center anchor bolt installation**

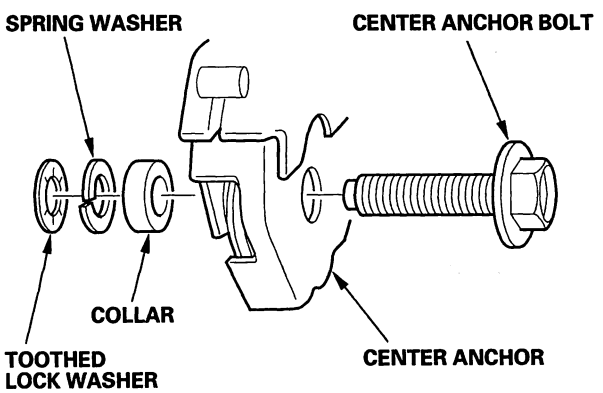


## Rear Seat Belt Replacement

NOTE: Check the second row seat belts for damage, and replace them if necessary. Be careful not to damage them during removal and installation.

### Rear Seat Belt

1. Pull on the front of the seat cushion, then tilt the seat cushion forward.

2. Remove the rear door sill trim (see page 20-68).

3. Pull the carpet back, and remove the lower anchor bolt (A).

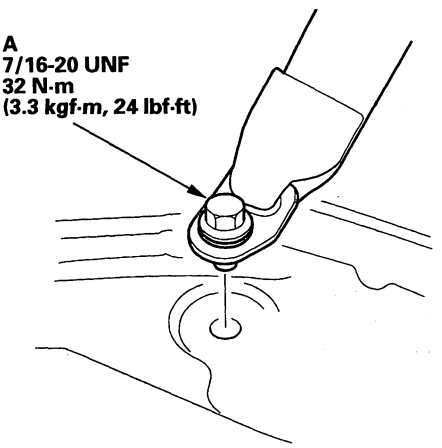


4. Remove these items:

   - Rear seat-back, fold down (see page 20-137)
   - Rear seat side bolsters, both sides (see page 20-138)
   - Cargo area side trim panel, both sides (see page 20-76)

(cont'd)

Protected by AR



## Rear Seat Belt Replacement (cont'd)

5. Remove the front retractor bolt (A) and rear retractor bolt (B), then remove the rear seat belt (C) and retractor (D).

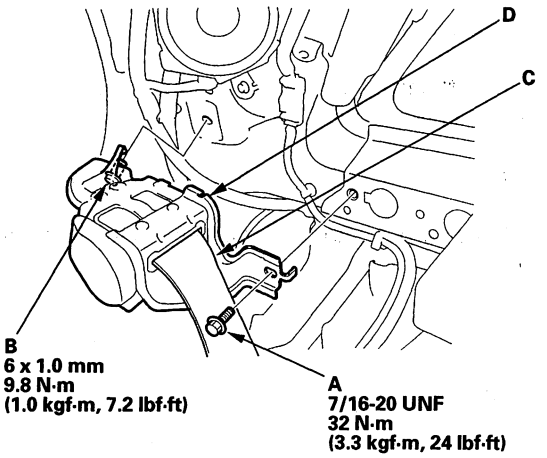


6. Install the rear seat belt and retractor in the reverse order of removal, and note these items:

   - Apply medium strength type liquid thread lock to the anchor bolts before reinstallation.
   - Check that the retractor locking mechanism functions as described (see page 24-10).
   - Before installing the anchor bolt, make sure there are no twists or kinks in the rear seat belt.

### Center Seat Belt and Seat Belt Buckle

1. Pull up on the front of the rear seat cushion, then tilt the rear seat cushion forward. Pull back the carpet as needed.

2. Remove the center anchor bolts (A), then remove the right seat belt buckle (B), center seat belt buckle (C), and left seat belt buckle (D).

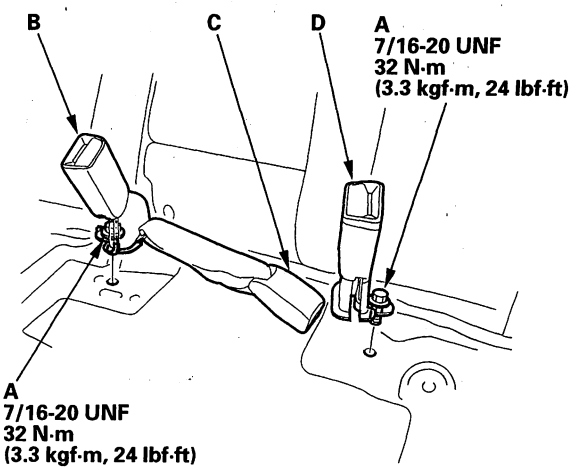


3. Remove the left seat-back (see page 20-137).

4. Remove the rear seat-back cover (see page 20-139).

5. Remove the screws, then remove the lid (A) on the seat back frame.

**Fastener Locations**

▶: Screw, 2

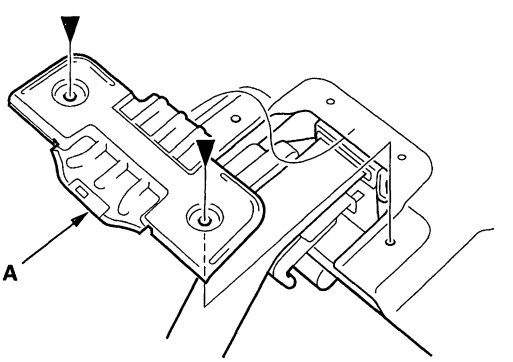




BACK

Protected by AR

6. Push in the tabs (A) and pull the belt guide trim (B) to release the hooks (C), then remove it.

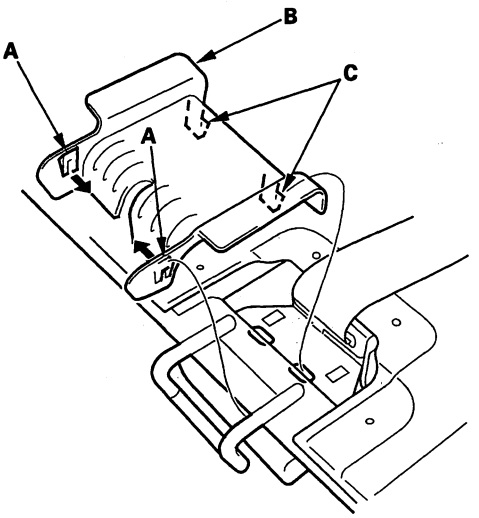


7. Remove the screw, and detach the hooks (A) by pulling the protector (B), then remove it.

**Fastener Location**

**▶ : Screw, 1**

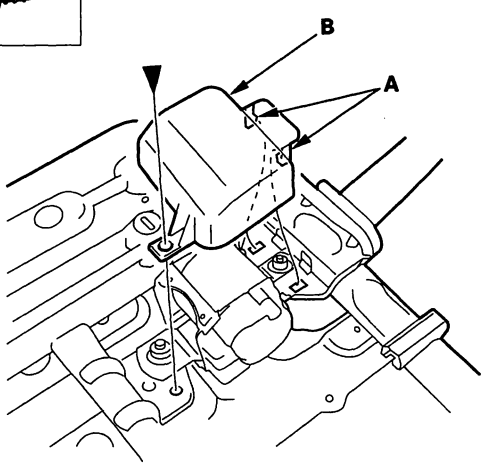


8. Remove the retractor mounting nut (A) and the retractor nut (B), then remove the center seat belt (C) and retractor (D) from the seat-back frame (E).

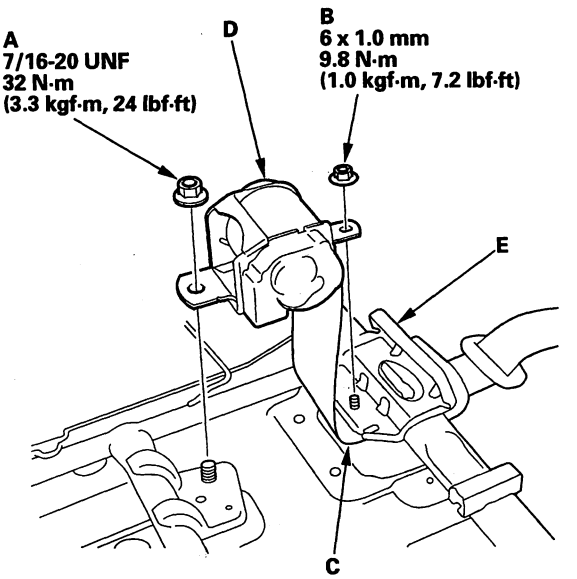


(cont'd)

Protected by AR



## Rear Seat Belt Replacement (cont'd)

9. Install the seat belt and buckles in the reverse order of removal, and note these items:
   - Apply medium strength type liquid thread lock to the center anchor bolts before reinstallation.
   - Tighten the bolts by hand first, then tighten to the specified torque.
   - Check that the retractor locking mechanism functions (see page 24-10).
   - Assemble the washers on the center anchor bolt as shown.
   - Before installing the center anchor bolt, make sure there are no twists or kinks in the center belt.
   - Make sure the rear center ELR (emergency locking retractor) is pointing straight forward.
   - When installing the rear seat cushion, make sure the seat belt buckles comes out from the space of the cushions.

**Center anchor bolt installation**

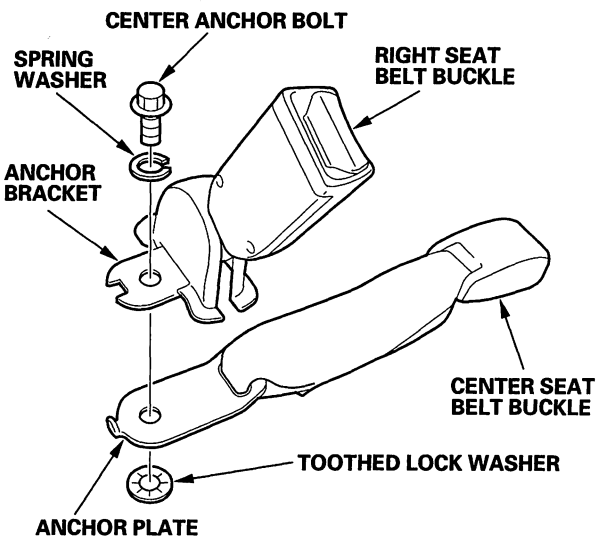


## Inspection

### Out of Vehicle

For front seat belt retractor with seat belt tensioner, review the SRS component locations (see page 24-12) and the precautions and procedures (see page 24-14) before doing repairs or service.

### Retractor

1. Before installing the retractor, check that the seat belt can be pulled out freely.

2. Make sure that the seat belt does not lock when the retractor (A) is leaned slowly up to 15 ° from the mounted position. The seat belt should lock when the retractor is leaned over 40 °. Do not attempt to disassemble the retractor.

**Front**

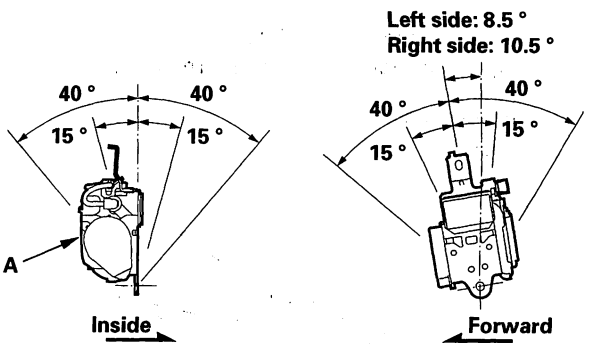




BACK

Protected by AR

**Rear center**

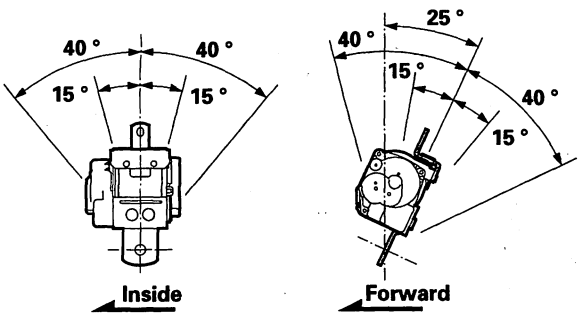


**Rear**

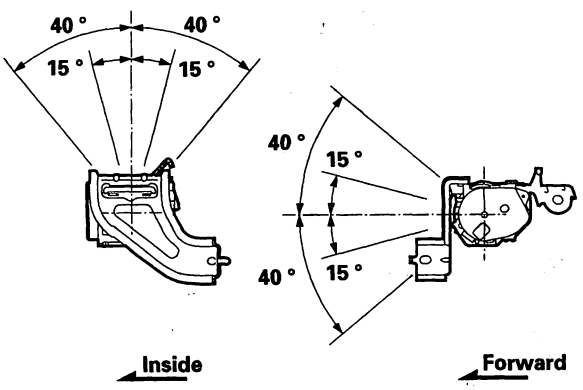


3. Replace the seat belt with a new assembly if does not function properly. Do not disassemble any part of the seat belt for any reason.

## In-vehicle

1. Check that the seat belt is not twisted or caught on anything.

2. After installing the anchors, check for free movement on the anchor bolts. If necessary, remove the anchor bolts and check that the washers and other parts are not damaged or improperly installed.

3. Check the seat belts for damage or discoloration. Clean with a shop towel if necessary. Use only soap and water to clean.

   NOTE: Dirt build-up in the loops of the upper anchors can cause the seat belts to retract slowly. Wipe the inside of the loops with a clean cloth dampened in isopropyl alcohol.

4. Check that the seat belt does not lock when pulled out slowly. The seat belt is designed to lock only during a sudden stop or impact.

5. Make sure that the seat belt will retract automatically when released.

6. For front passenger's seat belt and all rear seat belts, check the seat belt retractor locking mechanism ALR (automatic locking retractor). This function is for securing child seats.

   1. Pull the seat belt all the way out to engage the ALR. The seat belt should retract with a ratcheting sound, but not extend. This is normal.
   2. To disengage the ALR, release the seat belt and allow it to fully retract, then pull the seat belt out part-way. The seat belt should retract and extend normally.

7. Replace the seat belt with a new assembly if there is any abnormality. Do not disassemble any part of the seat belt for any reason.

BACK

Protected by AR



## Component Location Index

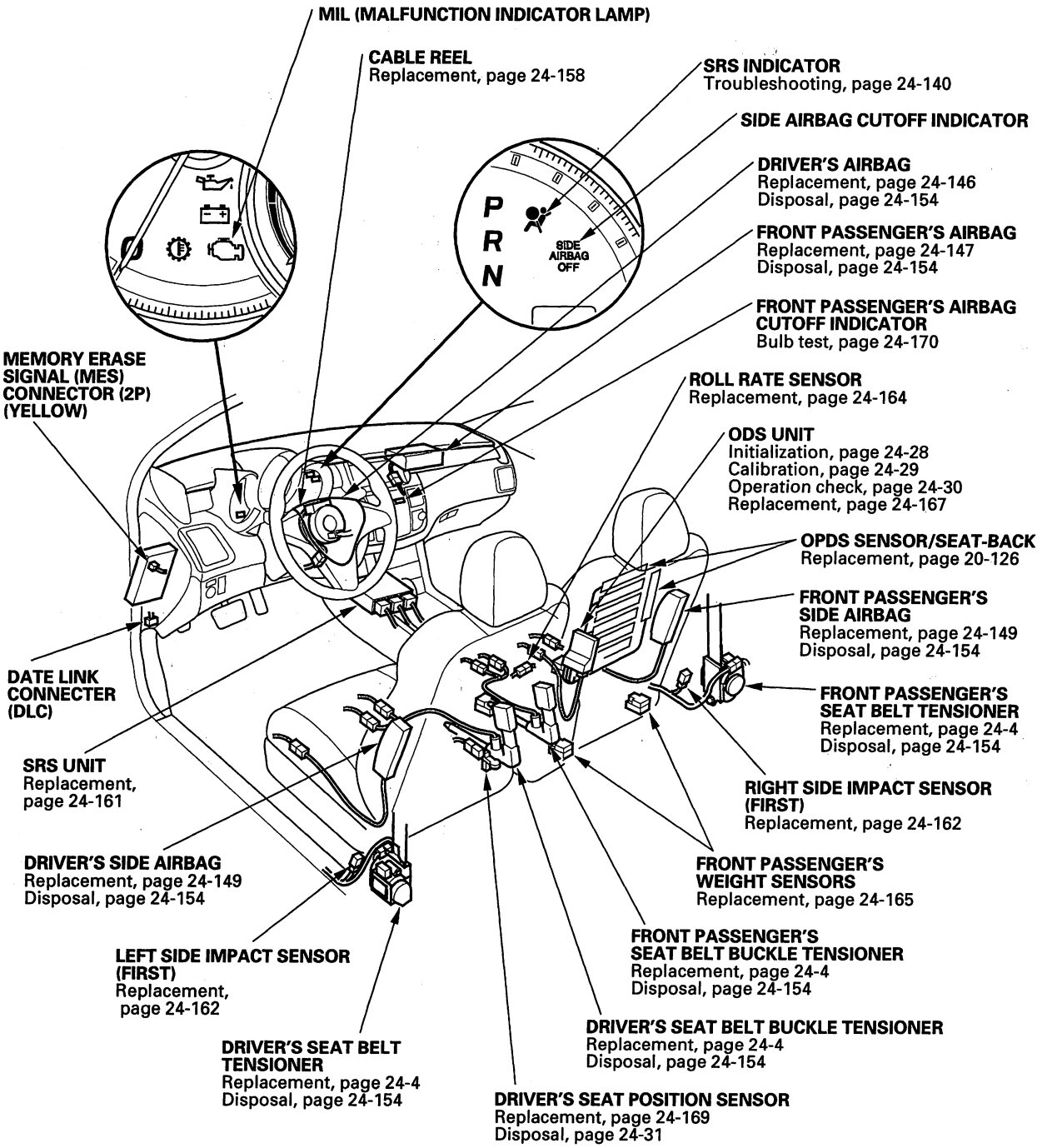




BACK

Protected by AR

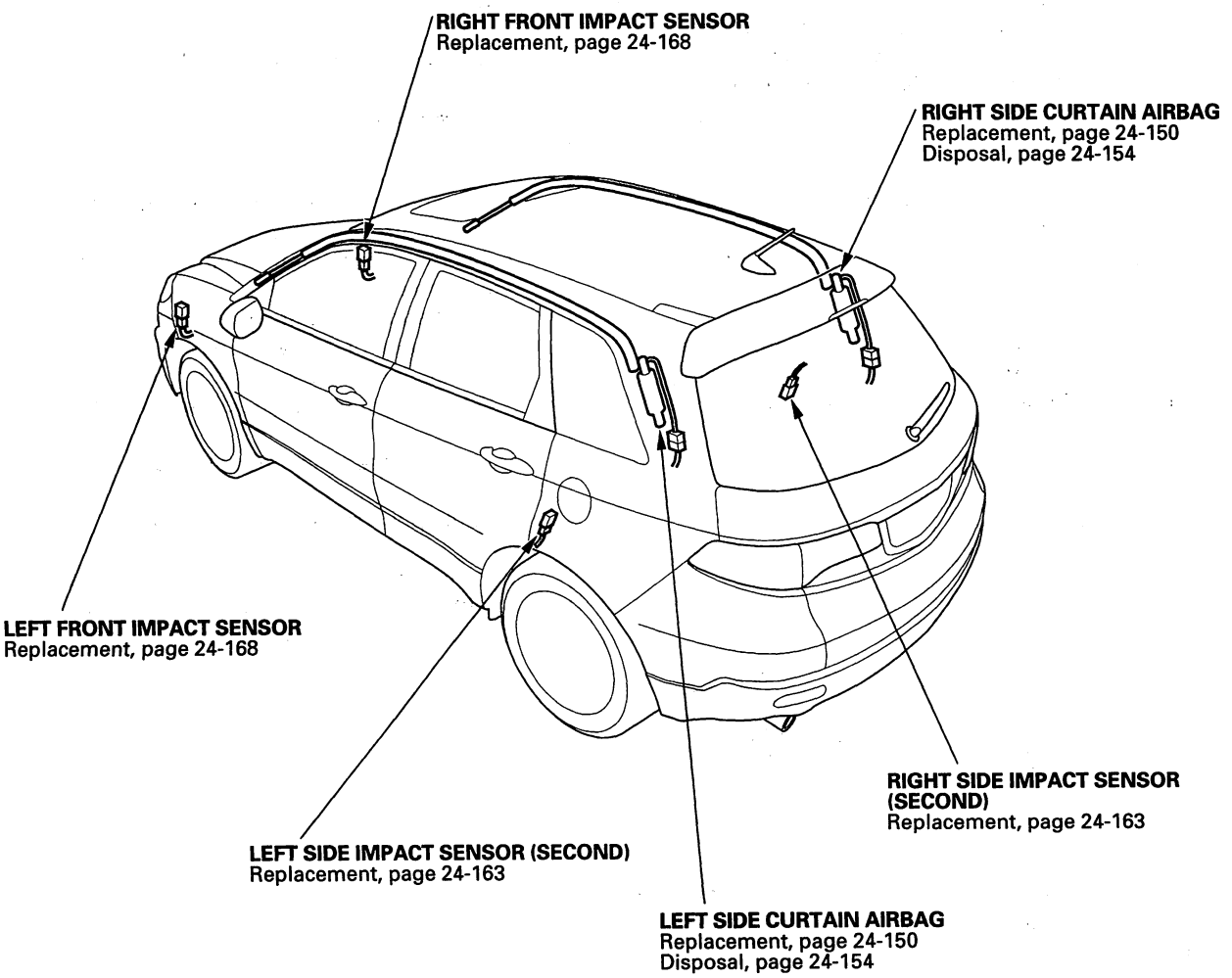

Protected by AR



## Precautions and Procedures

### General Precautions

Please read the following precautions carefully before performing the airbag system service. Observe the instructions described in this manual, or the airbags could accidentally deploy and cause damage or injuries.

- Except when performing electrical inspections, always turn the ignition switch OFF, ground the SCS line with the HDS to take the PCM out of active status, disconnect the negative cable from the battery, and wait at least 3 minutes before beginning work.
  NOTE: The SRS memory is not erased even if the ignition switch is turned OFF or the battery cables are disconnected from the battery.

- Use replacement parts which are manufactured to the same standards and quality as the original parts. Do not install used SRS parts. Use only new parts when making SRS repairs.

- Carefully inspect any SRS part before you install it. Do not install any part that shows signs of being dropped or improperly handled, such as dents, cracks or deformation.

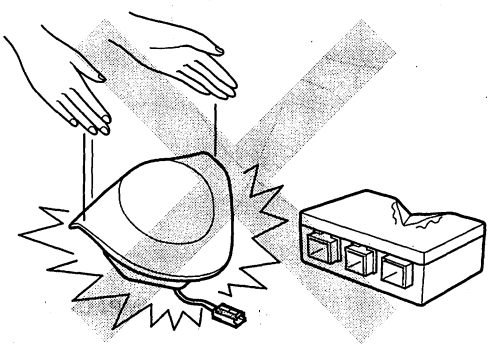

- Before removing any of the SRS parts (including the disconnection of the connectors), always disconnect the SRS connector.

- Use only a digital multimeter to check the system. If it is not a Honda multimeter, make sure its output is 10 mA (0.01 A) or less when switched to the lowest value in the ohmmeter range. A tester with a higher output could cause accidental deployment and possible injury.

- Do not put objects on the front passenger's airbag.

- The original audio and navigation system have a coded theft protection circuit. Be sure to get the anti-theft codes and write down the audio presets before disconnecting the negative cable from the battery.

- Before returning the vehicle to the customer, enter the audio and the navigation code (if equipped), then enter the audio presets; set the clock.

### Steering-related Precautions

#### Cable Reel Alignment

- Misalignment of the cable reel could cause an open in the wiring, making the SRS system, remote steering wheel controls, and the horn inoperative. Center the cable reel whenever the following is performed (see step 6 on page 24-160).
  – Installation of the steering wheel
  – Installation of the cable reel
  – Installation of the steering column
  – Other steering-related adjustment or installation

- Do not disassemble the cable reel.

- Do not apply grease to the cable reel.

- If the cable reel shows any signs of damage, replace it with a new one. For example, if it does not rotate smoothly, replace the cable reel.



BACK

Protected by AR

## Airbag Handling and Storage

Do not disassemble an airbag. It has no serviceable parts. Once an airbag has been deployed, it cannot be repaired or reused.

For temporary storage of an airbag during service, observe the following precautions.

- Store the removed airbag with the pad surface up. Never put anything on the airbag.

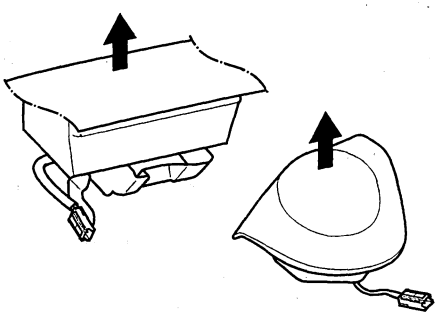

- To prevent damage to the airbag, keep it away from any oil, grease, detergent, or water.

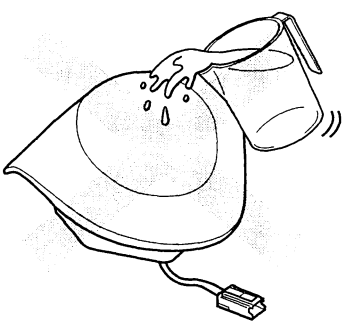

- Store the removed airbag on a secure, flat surface away from any high heat source (exceeding 200 ℉/ 93 ℃).

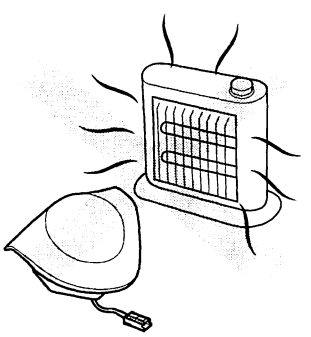

- Never perform electrical inspections to the airbags, such as measuring resistance.
- Do not position yourself in front of the airbag during removal, inspection, or replacement.

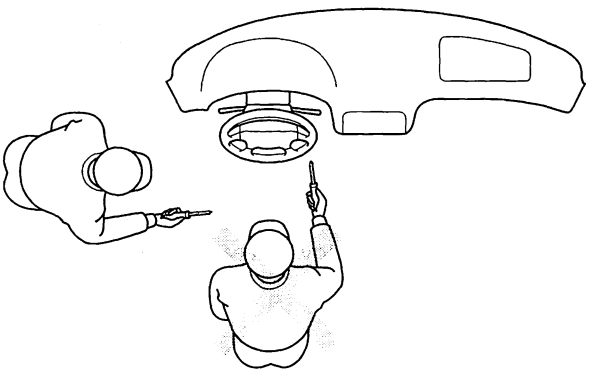

- For proper disposal of a damaged airbag, refer to airbag disposal (see page 24-154).
- The side curtain airbag inflator assembly is a long, jointed part containing an inflator (A), a flexible bag (B), and brackets (C).

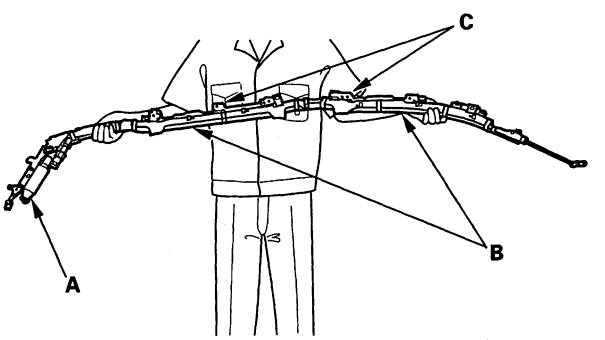


- When removing or installing the side curtain airbag inflator assembly, never handle the flexible bag (B).

(cont'd)

Protected by AR



## Precautions and Procedures (cont'd)

### SRS Unit, Impact Sensors, Driver's Seat Position Sensor, Front Passenger's Weight Sensors, and Roll Rate Sensor

- Be careful not to bump or impact the SRS unit, front impact sensors, side impact sensors, or the roll rate sensor whenever the ignition switch is ON (II), or for at least 3 minutes after the ignition switch is turned OFF.
- During installation or replacement, be careful not to bump (by impact wrench, hammer, etc.) the area around the SRS unit, front impact sensors, the side impact sensors, or the roll rate sensor. The airbags could accidentally deploy and cause damage or injury.

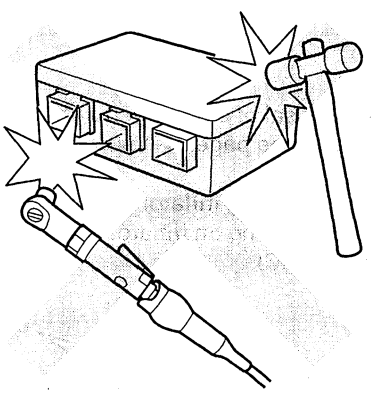

- After a collision in which the airbags, the side airbags, the side curtain airbags, or the seat belt tensioners were deployed, go to component replacement/ inspection after deployment (see page 24-143). After a collision during which the airbags, the side airbags, or the side curtain airbags did not deploy, inspect for any damage or any deformation on the SRS unit, front impact sensors, the side impact sensors, and the roll rate sensor. If there is any damage, replace the SRS unit and/or the sensors.

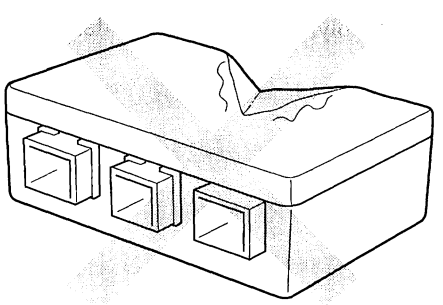

- Do not disassemble the SRS unit, front impact sensors, side impact sensors, driver's seat position sensor, front passenger's weight sensors, or the roll rate sensor.
- Turn the ignition switch OFF, disconnect the negative cable from the battery and wait at least 3 minutes before beginning installation or replacement of the SRS unit, or disconnecting the connectors from the SRS unit and any SRS component.
- Be sure the SRS unit, front impact sensors, side impact sensors, and the roll rate sensor are installed securely with the mounting bolts torqued to 9.8 N·m (1.0 kgf·m, 7.2 lbf·ft)
- Do not spill water or oil on the SRS unit, or the side impact sensors, and keep them away from dust.
- Store the SRS unit, front impact sensors, side impact sensors, and the roll rate sensor in a cool (less than 104 °F/40 °C) and dry (less than 80 % relative humidity, no moisture) area.



BACK

Protected by AR

## Wiring Precautions

Some of the SRS wiring can be identified by special yellow outer covering, and SRS connectors can be identified by their yellow color. Observe the instructions.

- Never attempt to modify, splice, or repair SRS wiring. If there is an open or damage in SRS wiring, replace the harness.

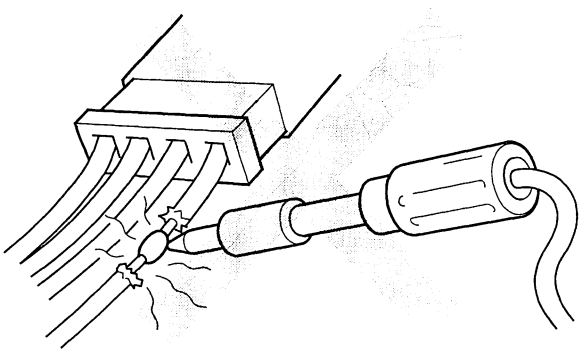

- Be sure to install the harness wires so they do not get pinched or interfere with other parts.

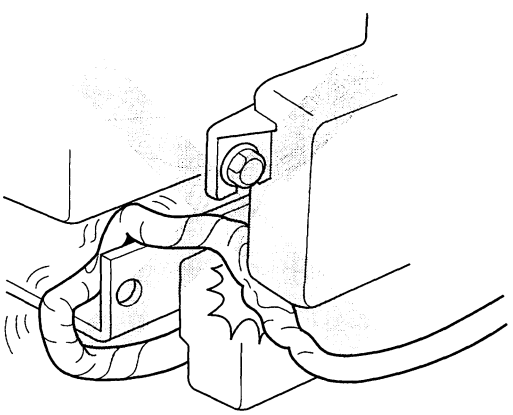

- Make sure all SRS ground locations are clean, and grounds are securely fastened for optimum metal-to-metal contact. Poor grounding can cause intermittent problems that are difficult to diagnose.

## Precautions for Electrical Inspections

- When using electrical test equipment, insert the probe of the tester into the wire side of the connector. Do not insert the probe of the tester into the terminal side of the connector, and do not tamper with the connector.

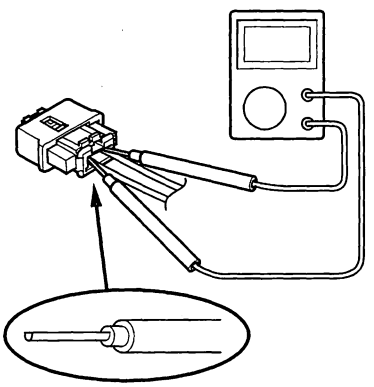

- Use a U-shaped probe. Do not insert the probe forcibly.

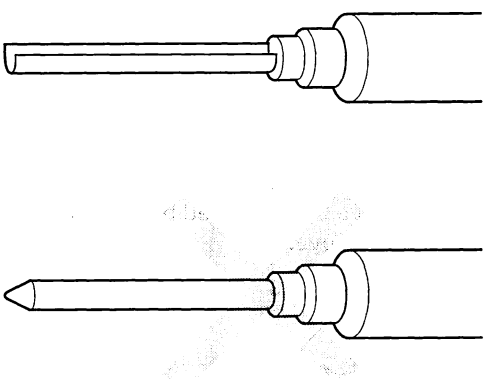

- Use specified service connectors in troubleshooting. Using improper tools could cause an error in inspection due to poor metal-to-metal contact.

(cont'd)

Protected by AR



## Precautions and Procedures (cont'd)

### Spring-loaded Lock Connector

Some SRS system connectors have a spring-loaded lock.

**Front Airbag Connectors**

**Disconnecting**
To release the lock, pull the spring-loaded sleeve (A) toward the stop (B) while holding the opposite half of the connector. Then pull the connector halves apart. Be sure to pull on the sleeve and not on the connector.

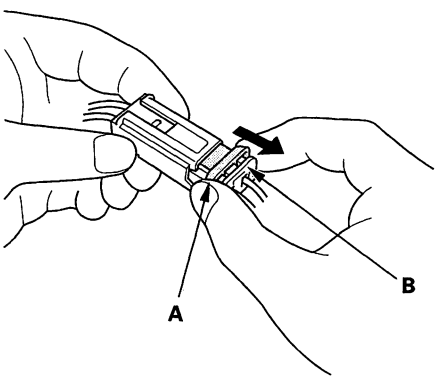


**Connecting**
To reconnect, hold the pawl-side connector, and press on the back of the sleeve-side connector in the direction shown. As the two connector halves are pressed together, the sleeve (A) is pushed back by the pawl (B). Do not touch the sleeve.

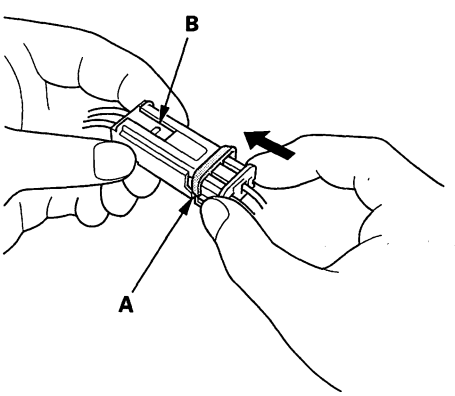


**Side Airbag Connector**

**Disconnecting**
To release the lock, pull the spring-loaded sleeve (A) toward the stop (B) while holding the opposite half of the connector. Then pull the connector halves apart. Be sure to pull on the sleeve and not on the connector half.

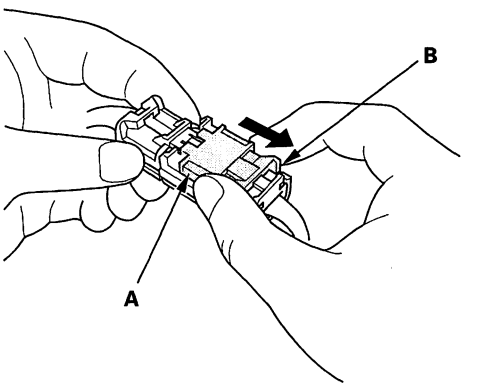


**Connecting**
Hold both connector halves, and press them firmly together until the projection (A) of the sleeve-side connector clicks.

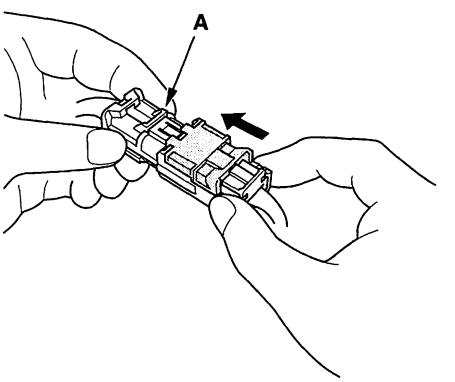




BACK

Protected by AR

## Opening the SRS Unit Shorting Connectors for Diagnosis

**Special Tools Required**
SRS short canceller 070AZ-SAA0100

NOTE:
- To prevent damage of the connector cavity, insert the short canceller straight into the cavity from the terminal side.
- Before installing the short canceller, wash it with electric contact cleaner or neutral detergent, then air blow dry it.
- Do not use the short canceller if it is damaged.
- Make sure to remove the short canceller before reconnection.

When the SRS unit connectors A, B or C are disconnected, a short circuit is created in the connector by its own function to prevent an airbag deployment. The circuit may need to be open when diagnosis is performed on the system. Insert the short canceller (T/N 070AZ-SAA0100) in the specified cavities when it is necessary to keep the circuit open for diagnosis.

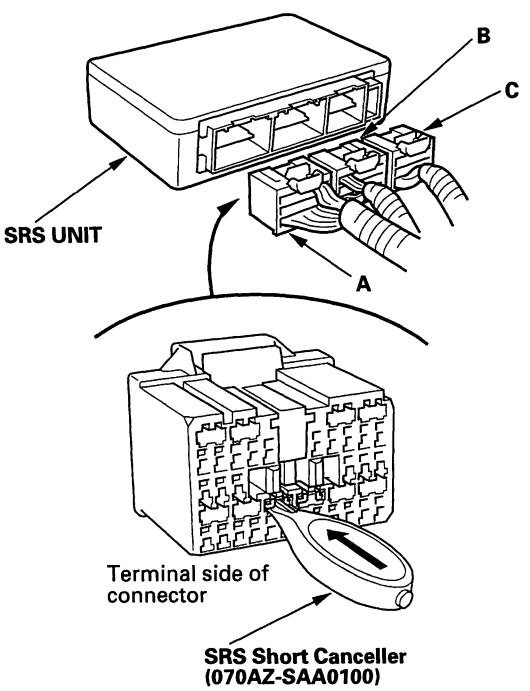


Terminal numbers are shown from the wire side of the female terminals. Insert the short canceller(s) into the cavities on the terminal side of the connector.

**SRS UNIT CONNECTOR A (28P)**

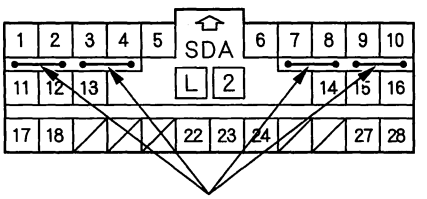


Insert short canceller(s) here.

Wire side of female terminals

**SRS UNIT CONNECTOR B (28P)**

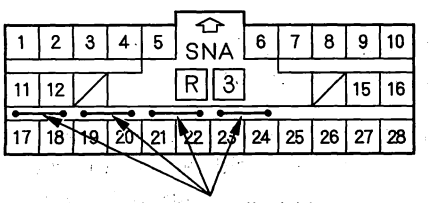


Insert short canceller(s) here.

Wire side of female terminals

**SRS UNIT CONNECTOR C (16P)**

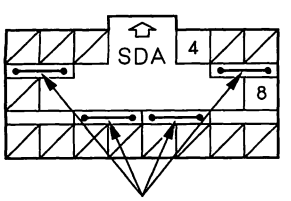


Insert short canceller(s) here.

Wire side of female terminals

(cont'd)

Protected by AR



## Precautions and Procedures (cont'd)

### Seats with Side Airbags

Seats with side airbags have a "SIDE AIRBAG" label on the seat-back.

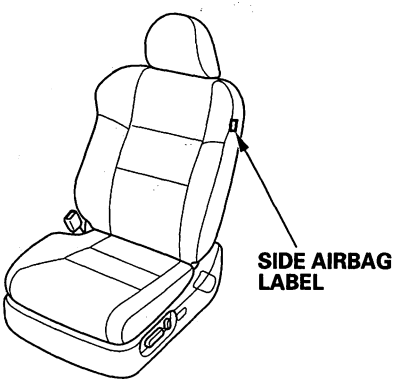


- When cleaning, do not saturate the seat with liquid, and do not spray steam on the seat.
- Do not repair a torn or frayed seat-back cover. Replace the seat-back cover.
- After a collision in which the side airbag was deployed, replace the side airbag and seat frame with new parts. If the seat-back cushion is split, it must be replaced.
- Never put aftermarket accessories on the seat (covers, pads, seat heaters, lights, etc.).



BACK

Protected by AR

## Disconnecting System Connectors

Turn the ignition switch OFF disconnect the negative cable from the battery, and wait at least 3 minutes before beginning the following procedures.

- Before disconnecting the cable reel 4P connector (1), disconnect the driver's airbag 4P connector (2).
- Before disconnecting SRS unit connector B from SRS unit, disconnect both seat belt tensioner 4P connectors and both seat belt buckle tensioner 4P connectors (3, 4, 5, 6).

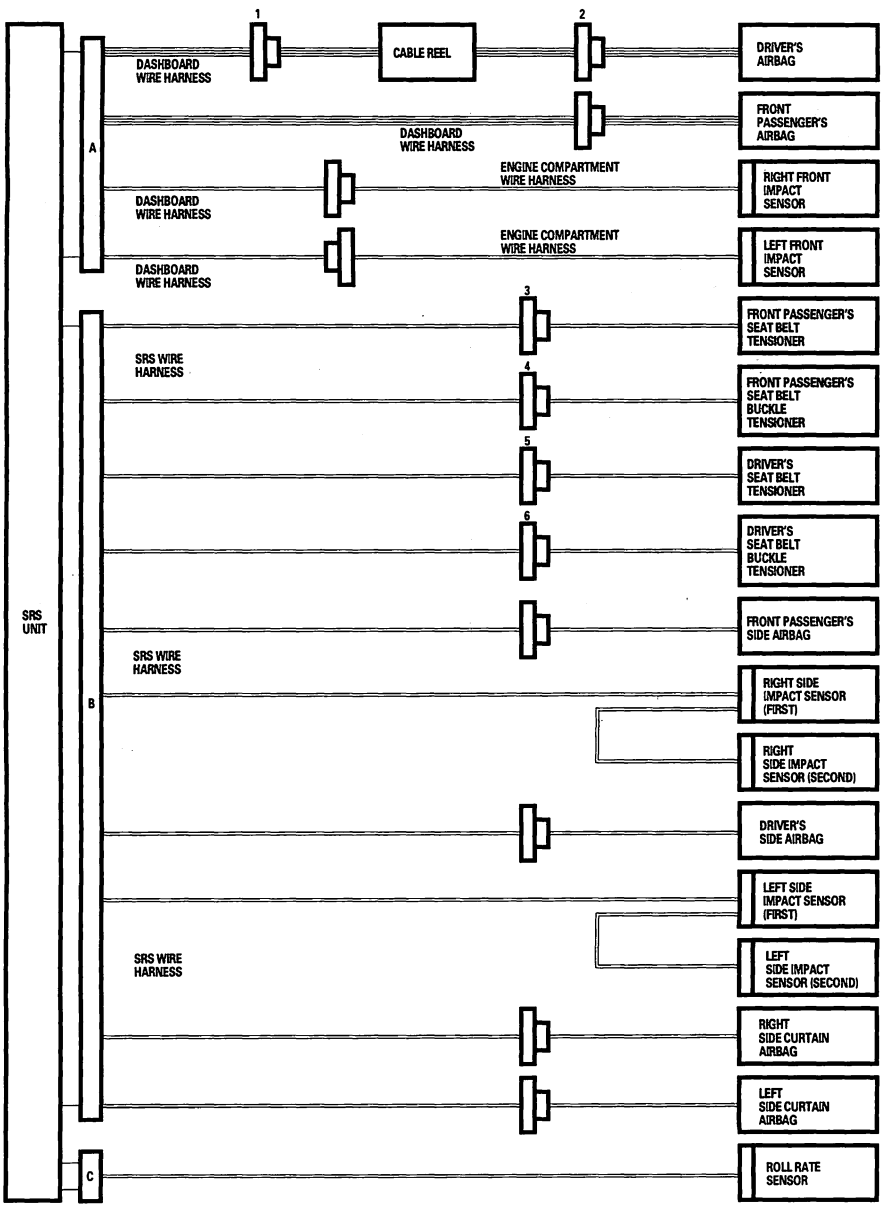


(cont'd)

BACK

Protected by AR



## Precautions and Procedures (cont'd)

1. Disconnect the negative cable from the battery, and wait at least 3 minutes.

**Driver's Airbag**

2. Remove the access panel (A) from the steering wheel, then disconnect the driver's airbag 4P connector (B) from the cable reel.

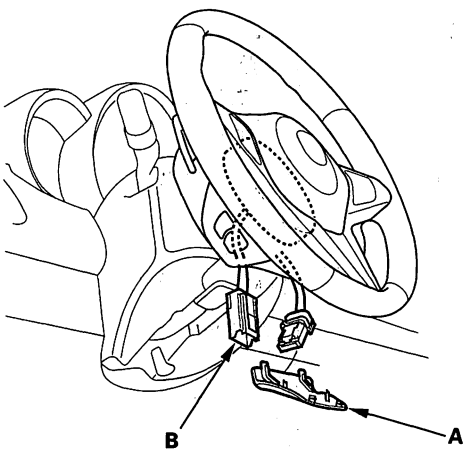


**Front Passenger's Airbag**

3. Remove the glove box (see page 20-104).

4. Remove the dashboard upper panel (see page 20-106).

5. Disconnect the dashboard wire harness 4P connector (A) from the front passenger's airbag.

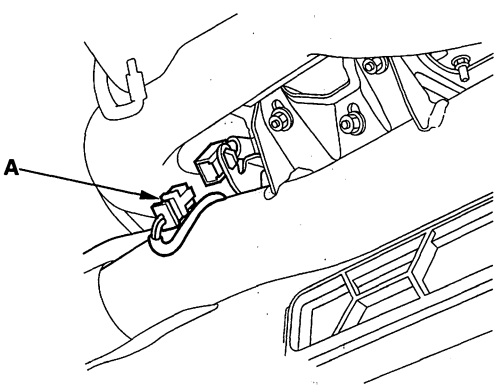


**Side Airbag**

6. Disconnect the side airbag 2P connectors (A) from the SRS wire harness.

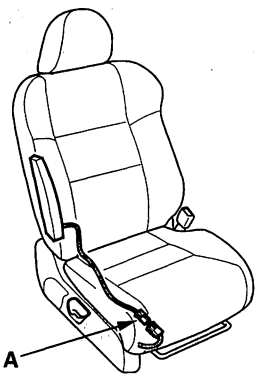


**Side Curtain Airbag**

7. Remove the headliner (see page 20-85).

8. Disconnect both SRS wire harness 2P connectors (A) from the side curtain airbags.

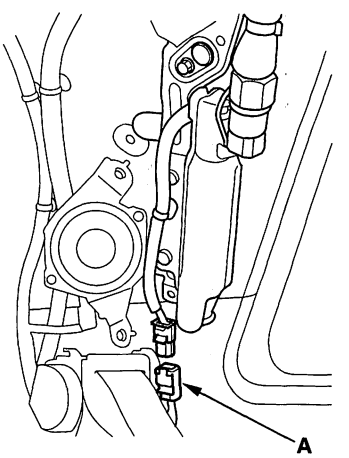




BACK

Protected by AR

**Seat Belt Tensioner**

9. Remove the front and rear door sill trim (see page 20-66).

10. Remove the B-pillar lower trim (see page 20-69), then disconnect both SRS wire harness 4P connectors (A) from the seat belt tensioners.

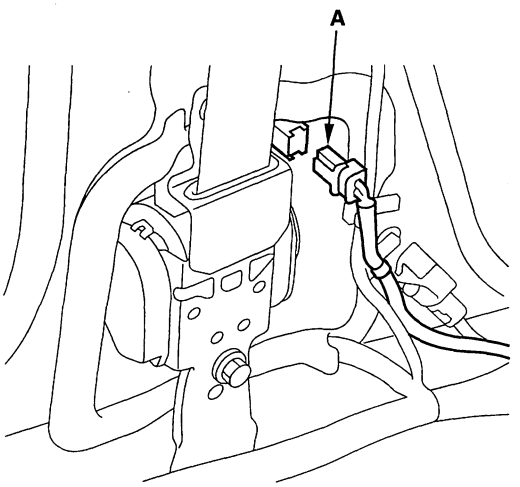


**Seat Belt Buckle Tensioner**

11. Disconnect both SRS wire harness 4P connectors (A) from the seat belt buckle tensioner.

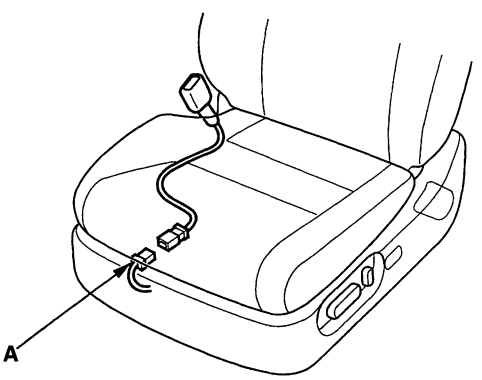


**SRS Unit**

12. Disconnect both seat belt tensioner connectors and both seat belt buckle tensioner connectors.

13. Remove the center console (see page 20-92).

14. Disconnect SRS unit connector A (28P), SRS unit connector B (28P) and SRS unit connector C (16P) from the SRS unit.

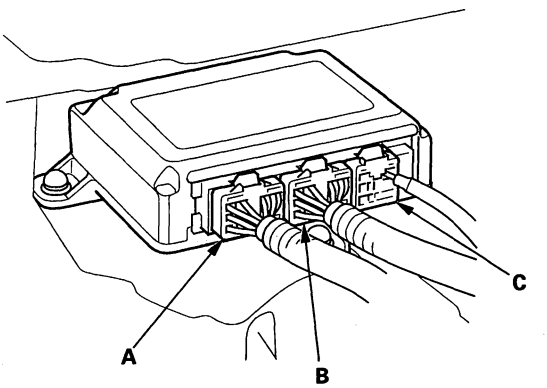


BACK

Protected by AR



## General Troubleshooting Information

### DTC (Diagnostic Trouble Codes)

The self-diagnostic function of the SRS system allows it to locate the causes of system problems and then store this information in memory. For easier troubleshooting, this data can be retrieved via a data link circuit.

- When you turn the ignition switch ON (II), the SRS indicator comes on. If it goes off after 6 seconds, the system is normal, and is not currently detecting any abnormality.
- If there is an abnormality, the system locates and defines the problem, stores this information in memory, and turns the SRS indicator on. The data will remain in the memory even when the ignition switch is turned off or if the battery is disconnected.
- The data is stored in memory as a diagnostic trouble code (DTC).
- The "x" at the end of each DTC denotes a numeric character (0 thru 9) or an alpha character (A thru F) that is displayed on the HDS.
- DTCs are either latching or resetting depending on the malfunction. With resetting DTCs, the SRS indicator will go off the next time the ignition switch is turned ON and the system is normal, but the DTC is still stored. With latching DTCs, the SRS indicator will not turn OFF until the malfunction is repaired and the DTC is cleared.
- When you connect the HDS to the 16P data link connector (DLC), you can retrieve a more detailed DTC in the Honda Systems "SRS" menu.
- After reading and recording the DTC, proceed with the troubleshooting procedure for that code.

#### Precautions

- Use only a digital multimeter to check the system. If it's not a Honda multimeter, make sure its output is 10 mA (0.01 A) or less when switched to the smallest value in the ohmmeter range. A tester with a higher output could damage the airbag circuit or cause accidental airbag deployment and possible injury.
- Whenever the ignition switch is ON (II), or has been turned OFF for less than 3 minutes, be careful not to bump the SRS unit; the airbags could accidentally deploy and cause damage or injuries.
- Before you remove the SRS harness, disconnect the driver's airbag connector, the front passenger's airbag connector, both side airbag connectors, both side curtain airbag connectors, both seat belt tensioner connectors, and both seat belt buckle tensioner connectors.
- Make sure the battery is sufficiently charged. If the battery is dead or low, measuring values may not be correct.
- Do not touch a tester probe to the terminals in the SRS unit or harness connectors, and do not connect the terminals with a jumper wire. Use only the backprobe set and the multimeter. Backprobe spring-loaded lock type connectors correctly.

### Reading the DTC

1. Make sure the ignition switch is OFF.
2. Connect the HDS to the DLC (A).

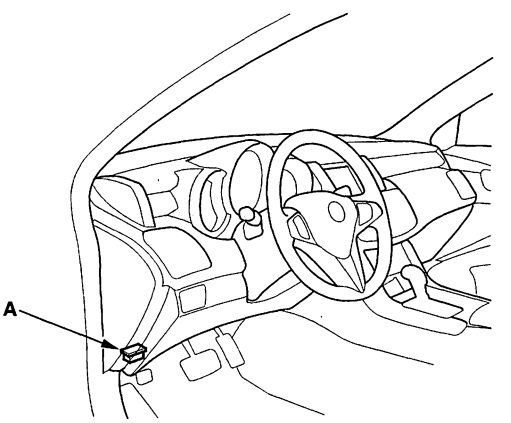


3. Turn the ignition switch ON (II).
4. Make sure the HDS communicates with the vehicle and the SRS unit. If it does not, troubleshoot the DLC circuit (see page 11-229).
5. Use the HDS to check for DTCs.
6. Read and record the DTC.
7. Turn the ignition switch OFF, and wait for 10 seconds.
8. Disconnect the HDS from the DLC.
9. Do the troubleshooting procedure for the DTC.



BACK

Protected by AR

## Erasing the DTC Memory with HDS

1. Make sure the ignition switch is OFF.
2. Connect the HDS to the DLC (A).

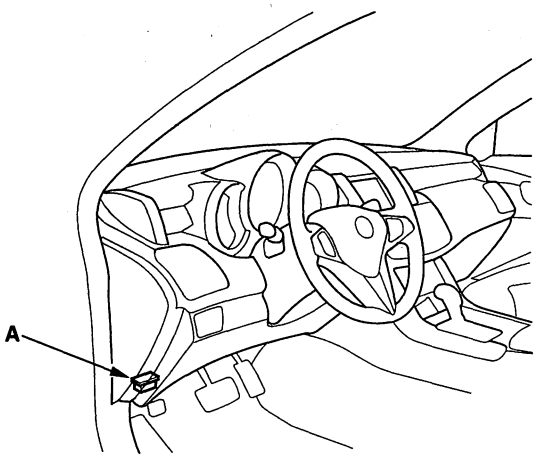


3. Turn the ignition switch ON (II).
4. Make sure the HDS communicates with the vehicle and the SRS unit. If it does not, troubleshoot the DLC circuit (see page 11-229).
5. In the SRS MENU of the HDS, select SRS, then DTC to erase DTC(s).
6. Turn the ignition switch OFF, and wait for 10 seconds.
7. Disconnect the HDS from the DLC.

## Erasing the DTC Memory Using the MES Connector without the HDS

**Special Tools Required**
SCS Service Connector 07PAZ-001010A

To erase the DTC(s) from the SRS unit, use the HDS or the following procedure.

1. Make sure the ignition switch is OFF.
2. Connect the SCS service connector (A) to the yellow MES 2P connector (B). Do not use a jumper wire.

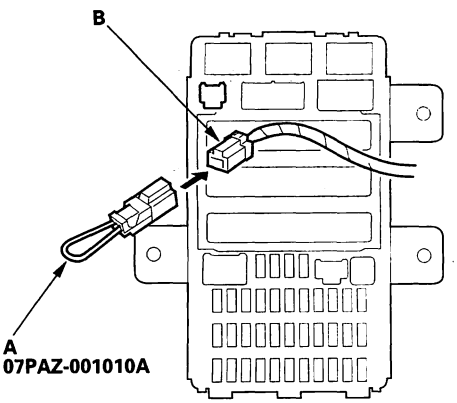


3. Turn the ignition switch ON (II).
4. The SRS indicator will come on for about 6 seconds, and then go off. Remove the SCS service connector from the MES connector (2P) within 4 seconds after the indicator goes off.
5. The SRS indicator will come on again. Reconnect the SCS service connector to the MES connector (2P) within 4 seconds after the indicator comes on.
6. When the SRS indicator goes off, remove the SCS service connector from the MES connector (2P) within 4 seconds.
7. The SRS indicator blinks two times, indicating that the memory has been erased.
8. Turn the ignition switch OFF, and wait for 10 seconds.
9. Turn the ignition switch ON (II) again. If the SRS indicator comes on for 6 seconds, and then goes off, the system is OK.

(cont'd)

Protected by AR



## General Troubleshooting Information (cont'd)

### Troubleshooting Intermittent Failures

If there was a malfunction, but it does not recur, it will be stored in the memory as an intermittent failure, and the SRS indicator may come on depending on the malfunction detected.

NOTE: Make sure the battery connections are good and the battery is sufficiently charged.

After checking the DTC, troubleshoot as follows:

1. Read the DTC (see "Reading the DTC").
2. Erase the DTC memory (see "Erasing the DTC Memory").
3. Set the parking brake, then start the engine, and let it idle.
4. The SRS indicator comes on for about 6 seconds and then goes off.
5. Shake the related wire harnesses and the connectors, and check for loose connections, poor pinfits, and poor grounds.
6. Take a test-drive (quick acceleration, quick braking, and cornering), turn the steering wheel fully left and right, and hold it there for 5 to 10 seconds. If the problem recurs, the SRS indicator will come on.

   NOTE: A faulty cable reel can cause intermittent DTCs related to the driver's airbag.
7. If you cannot duplicate the intermittent failure, the system is OK at this time.



BACK

Protected by AR

## Checking the Front Passenger's Weight Sensors after a Vehicle Collision

1. Position the front passenger's seat to the rear most position, adjust the recliner to the most forward position. Do not move the seat from this position.

2. Drive the vehicle, accelerate to 20 mph (36 km/h), then stop on level ground.

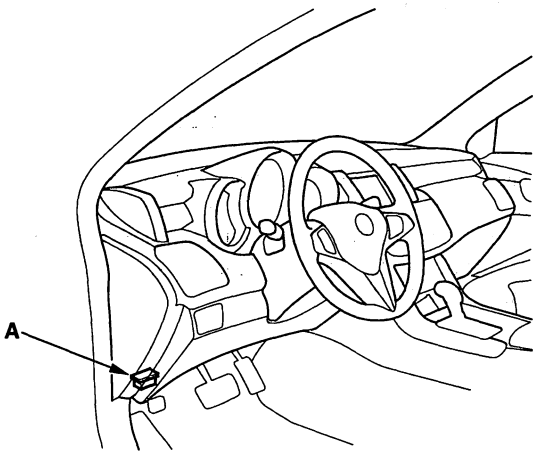


3. Connect the HDS to the data link connector (DLC) (A).

4. From the SRS inspection menu, select Seat Weight Sensor, then Misc Test, then "SEAT OUTPUT CHK." and follow the prompts until the ODS operation check has been completed.

Protected by AR



## ODS Unit Initialization

When a seat-back cover, seat-back cushion, and/or ODS unit is replaced, initialize the ODS by following the procedure.

NOTE: A new (uninitialized) ODS unit installed with a faulty ODS sensor can cause DTC 85-71 and 85-78.

1. Erase the DTC memory (see page 24-25).
2. Make sure the front passenger's seat is dry. Set the seat-back in a normal position, and make sure there is nothing on the seat.
3. Make sure the ignition switch is OFF and the MES connector is not shorted.
4. Connect the HDS to the DLC (A).

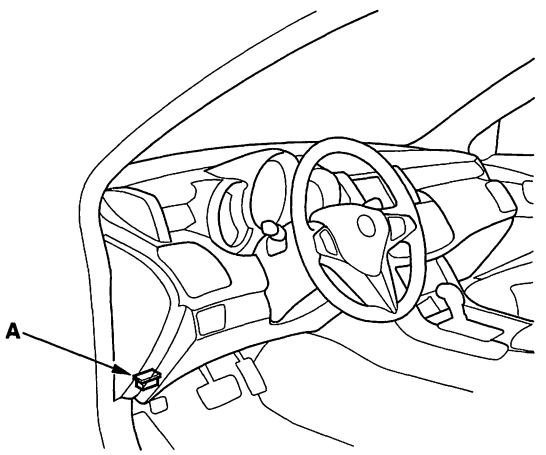


5. Turn the ignition switch ON (II).
6. Make sure the HDS communicates with the vehicle and the SRS unit. If it does not communicate, troubleshoot the DLC circuit (see page 11-229).
7. From the HDS Main Menu, select SRS, then SRS then Calibration. In the Calibration Menu, select ODS INITIALIZATION. Follow the screen prompts to initialize the ODS.
8. Turn the ignition switch OFF.
9. Disconnect the HDS from the DLC.

   NOTE: If the ODS system fails to initialize after several attempts, replace the OPDS sensor/seat-back (foam pad) and retry. If the ODS system continues to fail to initialize, replace the ODS unit (see page 24-167).



BACK

Protected by AR

## ODS Unit Calibration

When you replace the front passenger's weight sensors or the ODS unit, calibrate the ODS.

While calibrating the front passenger's weight sensor unit, observe these precautions:

- Make sure all components of the front passenger's seat are correctly installed.
- Make sure nothing is on or under the front passenger's seat.
- Make sure there is nothing in the front passenger's seat-back pocket.
- Keep the windows closed.
- Perform all calibration procedures except test-driving in the service bay.
- Make sure the vehicle is on level ground.
- Keep the A/C and the heater off.
- Do not touch the front passenger's seat until you drive the vehicle.
- Do not expose the front passenger's seat to sudden temperature changes.

1. Position the front passenger's seat to the rearmost position, and adjust the recliner to the most forward position. Do not move the seat from this position.

2. Connect the HDS to the data link connector (DLC) (A).

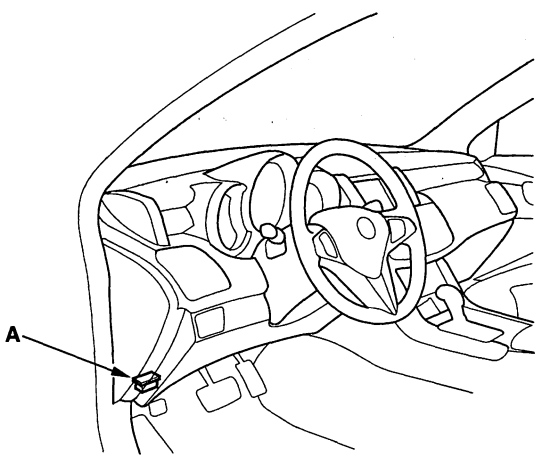


3. Make sure the HDS communicates with the vehicle and the SRS unit. If it does not communicate, troubleshoot the DLC circuit (see page 11-229).

4. Drive the vehicle, and accelerate to 20 mph (36 km/h), then stop on level ground.

5. From the Main Menu, select SRS, then Calibration, then Misc Test, then select "SWS INITIALIZATION," and follow the prompts until the initialization operation is complete.

Protected by AR



## ODS Unit Operation Check

Check the ODS operation after any of these actions.

- Replacement of front passenger's seat component(s) (except ODS unit and/or weight sensors)
- After a vehicle collision

### Pre-Operation Check Set-up

- Make sure all the components of the front passenger's seat are correctly installed.
- Position the front passenger's seat to the rearmost position. Adjust the seat recline to the forward most position. Do not move the seat from this position.
- Make sure nothing is on or under the front passenger's seat.
- Make sure there is nothing in the front passenger's seat-back pocket.
- Keep the windows closed.
- Perform all calibration procedures except test-driving in the service bay.
- Make sure the vehicle is on level ground.
- Turn the heater and the A/C off.
- Do not touch the front passenger's seat during the calibration.
- Do not expose the front passenger's seat to sudden temperature changes.

### After Replacing Front Passenger's Seat Component(s)

1. Make sure the ignition switch is OFF.
2. Connect the HDS to the data link connector (DLC) (A).

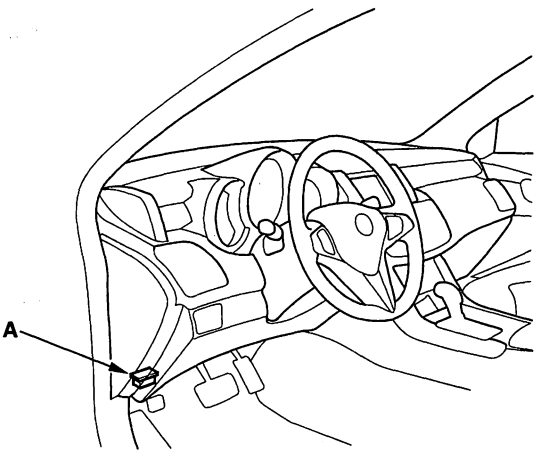


3. Turn the ignition switch ON (II).
4. Make sure the HDS communicates with the vehicle and the SRS unit. If it does not communicate, troubleshoot the DLC circuit (see page 11-229).
5. Drive the vehicle, accelerate to 20 mph (36 km/h), then stop on level ground.
6. From the HDS Main Menu, select SRS, then Misc Test, then Inspection. In the HDS Inspection Menu, select "SEAT OUTPUT CHK." The weight (T0) of the front passenger's seat is recorded by the HDS.



BACK

Protected by AR

## Driver's Seat Position Sensor Operation Check

Check the driver's seat position after any of these actions.

- Driver's seat position sensor replacement
- Cover plate (front side of driver's seat slide rail) replacement

1. Make sure the ignition switch is OFF.
2. Connect the HDS to the DLC (A).

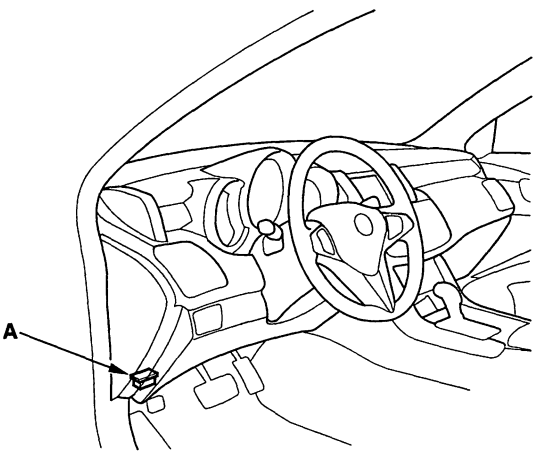


3. Turn the ignition switch ON (II).
4. Make sure the HDS communicates with the vehicle and the SRS unit. If it does not communicate, troubleshoot the DLC circuit (see page 11-229).
5. Move the seat all the way forward.
6. From the HDS Main Menu, select SRS then Parameter Information, then Buckle Switch, Seat Position Sensor.
7. Using a piece of tape (A), mark a line on the seat's outer cover (B), where the front riser cover meets the seat riser (C). The driver's seat position sensor should read "NEAR."

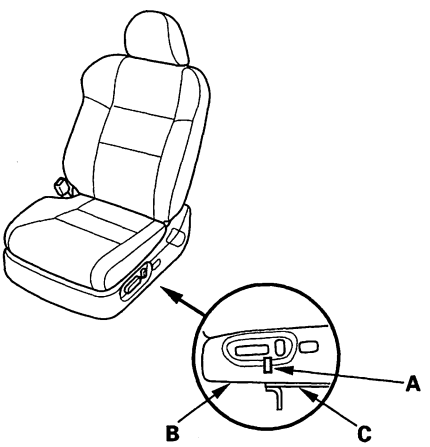


8. Move the seat back in small increments (about 0.2 in., 5 mm) until the driver's seat position sensor reads "NOT NEAR." The seat should be approximately 1 in. (25 mm) from the front.

   NOTE: It takes a few seconds for the HDS to display changes, so wait about 5 seconds between each move.

   If the driver's seat position sensor data does not work as described above, check the driver's seat position sensor or the cover plate for damage, and replace parts as needed.

9. Turn the ignition switch OFF, and disconnect the HDS from the DLC.

Protected by AR



## DTC Troubleshooting Index

| DTC | Latch *1 | Reset *2 | Detection Item | Notes |
|---|---|---|---|---|
| 11-11 | | × | Open in driver's airbag first inflator | (see page 24-48) |
| 11-21 | | | Increased resistance in driver's airbag first inflator | |
| 11-31 | | | Short to another wire or decreased resistance in driver's airbag first inflator | (see page 24-49) |
| 11-41 | | | Open in driver's airbag second inflator | (see page 24-48) |
| 11-51 | | | Increased resistance in driver's airbag second inflator | |
| 11-61 | | | Short to another wire or decreased resistance in driver's airbag second inflator | (see page 24-49) |
| 11-81 | × | | Short to power in driver's airbag first inflator | (see page 24-51) |
| 11-91 | | | Short to ground in driver's airbag first inflator | (see page 24-52) |
| 11-A1 | | | Short to power in driver's airbag second inflator | (see page 24-51) |
| 11-B1 | | | Short to ground in driver's airbag second inflator | (see page 24-52) |
| 12-11 | | × | Open in front passenger's airbag first inflator | (see page 24-54) |
| 12-21 | | | Increased resistance in front passenger's airbag first inflator | |
| 12-31 | | | Short to another wire or decreased resistance in front passenger's airbag first inflator | (see page 24-55) |
| 12-41 | | | Open in front passenger's airbag second inflator | (see page 24-54) |
| 12-51 | | | Increased resistance in front passenger's airbag second inflator | |
| 12-61 | | | Short to another wire or decreased resistance in front passenger's airbag second inflator | (see page 24-55) |
| 12-81 | × | | Short to power in front passenger's airbag first inflator | (see page 24-56) |
| 12-91 | | | Short to ground in front passenger's airbag first inflator | (see page 24-57) |
| 12-A1 | | | Short to power in front passenger's airbag second inflator | (see page 24-56) |
| 12-B1 | | | Short to ground in front passenger's airbag second inflator | (see page 24-57) |
| 21-11 | | × | Open in driver's seat belt tensioner | (see page 24-58) |
| 21-21 | | | Increased resistance in driver's seat belt tensioner | |
| 21-31 | | | Short to another wire or decreased resistance in driver's seat belt tensioner | (see page 24-59) |
| 21-81 | × | | Short to power in driver's seat belt tensioner | (see page 24-60) |
| 21-91 | | | Short to ground in driver's seat belt tensioner | (see page 24-61) |
| 22-11 | | × | Open in front passenger's seat belt tensioner | (see page 24-62) |
| 22-21 | | | Increased resistance in front passenger's seat belt tensioner | |
| 22-31 | | | Short to another wire or decreased resistance in front passenger's seat belt tensioner | (see page 24-63) |
| 22-81 | × | | Short to power in front passenger's seat belt tensioner | (see page 24-64) |
| 22-91 | | | Short to ground in front passenger's seat belt tensioner | (see page 24-65) |
| 27-11 | | × | Open in driver's seat belt buckle tensioner | (see page 24-66) |
| 27-21 | | | Increased resistance in driver's seat belt buckle tensioner | |
| 27-31 | | | Short to another wire or decreased resistance in driver's seat belt buckle tensioner | (see page 24-67) |
| 27-81 | × | | Short to power in driver's seat belt buckle tensioner | (see page 24-68) |
| 27-91 | | | Short to ground in driver's seat belt buckle tensioner | (see page 24-69) |
| 28-11 | | × | Open or in front passenger's seat belt buckle tensioner | (see page 24-70) |
| 28-21 | | | Increased resistance in front passenger's seat belt buckle tensioner | |
| 28-31 | | | Short to another wire or decreased resistance in front passenger's seat belt buckle tensioner | (see page 24-71) |
| 28-81 | × | | Short to power in front passenger's seat belt buckle tensioner | (see page 24-72) |
| 28-91 | | | Short to ground in front passenger's seat belt buckle tensioner | (see page 24-73) |
| 31-11 | | × | Open in driver's side airbag inflator | (see page 24-74) |
| 31-21 | | | Increased resistance in driver's side airbag inflator | |
| 31-31 | | | Short to another wire or decreased resistance in driver's side airbag inflator | (see page 24-75) |
| 31-81 | × | | Short to power in driver's side airbag inflator | (see page 24-76) |
| 31-91 | | | Short to ground in driver's side airbag inflator | (see page 24-77) |
| 32-11 | | × | Open in front passenger's side airbag inflator | (see page 24-78) |
| 32-21 | | | Increased resistance in front passenger's side airbag inflator | |
| 32-31 | | | Short to another wire or decreased resistance in front passenger's side airbag inflator | (see page 24-79) |
| 32-81 | × | | Short to power in front passenger's side airbag inflator | (see page 24-80) |
| 32-91 | | | Short to ground in front passenger's side airbag inflator | (see page 24-81) |



BACK

Protected by AR

| DTC | Latch *1 | Reset *2 | Detection Item | Notes |
|---|---|---|---|---|
| 33-11 | | × | Open in left side curtain airbag inflator | (see page 24-82) |
| 33-21 | | | Increased resistance in left side curtain airbag inflator | |
| 33-31 | | | Short to another wire or decreased resistance in left side curtain airbag inflator | (see page 24-83) |
| 33-81 | × | | Short to power in left side curtain airbag inflator | (see page 24-84) |
| 33-91 | | | Short to ground in left side curtain airbag inflator | (see page 24-85) |
| 34-11 | | × | Open in right side curtain airbag inflator | (see page 24-86) |
| 34-21 | | | Increased resistance in right side curtain airbag inflator | |
| 34-31 | | | Short to another wire or decreased resistance in right side curtain airbag inflator | (see page 24-87) |
| 34-81 | × | | Short to power in right side curtain airbag inflator | (see page 24-88) |
| 34-91 | | | Short to ground in right side curtain airbag inflator | (see page 24-89) |
| 41-11 | | × | No signal from the left front impact sensor | (see page 24-90) |
| 41-21 | | | Internal failure of the left front impact sensor | (see page 24-96) |
| 41-81 | × | | | |
| 41-91 | | | | |
| 41-A1 | | | | |
| 41-B1 | | | | |
| 41-B2 | | | | |
| 42-11 | | × | No signal from the right front impact sensor | (see page 24-93) |
| 42-21 | | | Internal failure of the right front impact sensor | (see page 24-96) |
| 42-81 | × | | | |
| 42-91 | | | | |
| 42-A1 | | | | |
| 42-B1 | | | | |
| 42-B2 | | | | |
| 43-11 | | × | No signal from the left side impact sensor (first) | (see page 24-97) |
| 43-21 | | | Internal failure of the left side impact sensor (first) | (see page 24-102) |
| 43-81 | × | | | |
| 43-91 | | | | |
| 43-A1 | | | | |
| 43-B1 | | | | |
| 43-B2 | | | | |
| 44-11 | | × | No signal from the right side impact sensor (first) | (see page 24-99) |
| 44-21 | | | Internal failure of the right side impact sensor (first) | (see page 24-102) |
| 44-81 | × | | | |
| 44-91 | | | | |
| 44-A1 | | | | |
| 44-B1 | | | | |
| 44-B2 | | | | |
| 45-11 | | × | No signal from the left side impact sensor (second) | (see page 24-103) |
| 45-21 | | | Internal failure of the left side impact sensor (second) | (see page 24-108) |
| 45-81 | × | | | |
| 45-91 | | | | |
| 45-A1 | | | | |
| 45-B1 | | | | |
| 45-B2 | | | | |
| 46-11 | | × | No signal from the right side impact sensor (second) | (see page 24-105) |
| 46-21 | | | Internal failure of the right side impact sensor (second) | (see page 24-108) |
| 46-81 | × | | | |
| 46-91 | | | | |
| 46-A1 | | | | |
| 46-B1 | | | | |
| 46-B2 | | | | |

* 1: The SRS indicator turns on and stays on whenever the ignition switch is in the ON (II) position, or until the code is cleared.
* 2: The SRS indicator turns on when the DTC is set. The SRS indicator will not turn on after the ignition switch is cycled from ON (II) to OFF (0), but the DTC is stored in the SRS unit.

(cont'd)

Protected by AR



## DTC Troubleshooting Index (cont'd)

| DTC | Latch *1 | Reset *2 | Detection Item | Notes |
|---|---|---|---|---|
| 51-xx | | X | Internal failure of the SRS unit | (see page 24-109) |
| 52-xx | X | | | |
| 53-xx | | X | | |
| 54-xx | | | | |
| 55-xx | | | | |
| 57-xx | | | | |
| 61-11 | | X | Open in driver's seat belt buckle switch | (see page 24-110) |
| 61-21 | | | Short in driver's seat belt buckle switch | (see page 24-113) |
| 62-11 | | | Open in front passenger's seat belt buckle switch | (see page 24-114) |
| 62-21 | | | Short in front passenger's seat belt buckle switch | (see page 24-117) |
| 71-11 | | | Open in driver's seat position sensor | (see page 24-119) |
| 71-21 | | | Short in driver's seat position sensor | (see page 24-120) |
| 71-22 | | | Short to power in driver's seat position sensor | (see page 24-122) |
| 81-4x | | | Internal failure of the ODS unit | (see page 24-127) |
| 81-61 | | | No signal from ODS unit | (see page 24-123) |
| 81-62 | | | Non-stipulated response data | |
| 81-63 | | | Internal failure of the ODS unit | (see page 24-127) |
| 81-64 | | | ECU (ODS unit) serial ID code inconsistent/Internal failure of the ODS unit | |
| 81-71 | | | ODS unit does not calibrate | (see page 24-126) |
| 81-78 | | | | |
| 81-79 | | | Front passenger's weight sensors drift check failure | (see page 24-127) |



BACK

Protected by AR

| DTC | Latch *1 | Reset *2 | Detection Item | Notes |
|---|---|---|---|---|
| 82-1x | | | No signal from the inner side front passenger's weight sensor | (see page 24-128) |
| 83-2x | | | No signal from the outer side front passenger's weight sensor | (see page 24-128) |
| 85-4x | | | Internal failure of the ODS unit | (see page 24-129) |
| 85-61 | | | No signal from ODS unit | (see page 24-123) |
| 85-62 | | | Non-stipulated response data | |
| 85-63 | | | Internal failure of the ODS unit | (see page 24-129) |
| 85-64 | | | | |
| 85-71 | | | ODS unit not initialized | (see page 24-126) |
| 85-78 | | | | |
| 85-79 | | | OPDS sensor drift check failure | (see page 24-129) |
| 86-1x | | | Faulty OPDS seat-back sensor | (see page 24-130) |
| 86-2x | | | Faulty OPDS seat support sensor | |
| 92-11 | | | Short to power in the passenger's airbag cutoff indicator | (see page 24-131) |
| 92-21 | | | Open or short to ground in the passenger's airbag cutoff indicator | (see page 24-132) |
| A1-11 | | | Faulty power supply (VA line) | (see page 24-134) |
| A2-11 | | | Faulty power supply (VB line) | (see page 24-135) |
| B1-11 | | | No signal from the roll rate sensor | (see page 24-137) |
| B1-21 | | | Internal failure of the roll rate sensor | (see page 24-139) |
| B1-81 | X | | | |
| B1-91 | | | | |
| B1-A1 | | | | |
| B1-B1 | | | | |
| B1-B2 | | | | |
| E2-11 | | | Front passenger's airbag does not deploy by SWS operation | (see page 24-109) |
| E4-11 | | | Front passenger's side airbag does not deploy by OPDS operation | |
| F1-11 | | | Driver's airbag and/or driver's seat belt tensioner and seat belt buckle tensioner deployed | |
| F2-11 | | | Front passenger's airbag and/or front passenger's seat belt tensioner and seat belt buckle tensioner deployed | |
| F3-11 | | | Driver's side airbag, left side curtain airbag, and driver's seat belt tensioner deployed | |
| F4-11 | | | Front passenger's side airbag, right side curtain airbag, and front passenger's seat belt tensioner deployed | |
| F5-11 | | | Both or only one side curtain airbag, seat belt tensioner, and seat belt buckle tensioner deployed | |
| F6-11 | | | Left side airbag or right side curtain airbag deployed | |

NOTE: The "x" at the end of each DTC denotes a numeric character (0 thru 9) or an alpha character (A thru F) that you will see on the HDS display. The character is unrelated to your troubleshooting; it designates the SRS unit manufacturer and other detail used for product analysis.

* 1: The SRS indicator turns on and stays on whenever the ignition switch is in the ON (II) position, or until the code is cleared.
* 2: The SRS indicator turns on when the DTC is set. The SRS indicator will not turn on after the ignition switch is cycled from ON (II) to OFF (0), but the DTC is stored in the SRS unit.

(cont'd)

Protected by AR



## DTC Troubleshooting Index (cont'd)

When an OPDS sensor or seat weight sensor failure occurs, the DTC is stored by the SRS unit and the ODS unit. The ODS unit DTC is a subcode of the SRS unit DTC.

**ODS Unit DTC Index**

| SRS Unit DTC | ODS Unit DTC | Detection Item | Notes |
|---|---|---|---|
| 81-41 | 41-0x | Internal failure of the ODS unit | (see page 24-127) |
| | 41-11 | | |
| 82-1x | 14-11 | Short to power in the front inner side front passenger's weight sensor power circuit | (see page 24-128) |
| | 14-12 | Short to ground in the front inner side front passenger's weight sensor power circuit | |
| | 14-13 | Open in the front inner side front passenger's weight sensor signal line | |
| | 14-14 | Short in the front inner side front passenger's weight sensor signal line | |
| | 15-3x | No signal from the front inner side front passenger's weight sensor | |
| | 16-11 | Short to power in the rear inner side front passenger's weight sensor power circuit | |
| | 16-12 | Short to ground in the rear inner side front passenger's weight sensor power circuit | |
| | 16-13 | Open in the rear inner side front passenger's weight sensor signal line | |
| | 16-14 | Short in the rear inner side front passenger's weight sensor signal line | |
| | 17-3x | No signal from the rear inner side front passenger's weight sensor | |
| 83-2x | 24-11 | Short to power in the front outer side front passenger's weight sensor power circuit | (see page 24-128) |
| | 24-12 | Short to ground in the front outer side front passenger's weight sensor power circuit | |
| | 24-13 | Open in the front outer side front passenger's weight sensor signal line | |
| | 24-14 | Short in the front outer side front passenger's weight sensor signal line | |
| | 25-3x | No signal from the front outer side front passenger's weight sensor | |
| | 26-11 | Short to power in the rear outer side front passenger's weight sensor power circuit | |
| | 26-12 | Short to ground in the rear outer side front passenger's weight sensor power circuit | |
| | 26-13 | Open in the rear outer side front passenger's weight sensor signal line | |
| | 26-14 | Short in the rear outer side front passenger's weight sensor signal line | |
| | 27-3x | No signal from the rear outer side front passenger's weight sensor | |
| 85-4x | 42-1x | Internal failure of the ODS unit | (see page 24-129) |
| | 42-2x | | |
| | 43-3x | | |
| | 43-4x | | |
| 85-71 | 71-41 | ODS unit does not calibrate | (see page 24-126) |
| | 71-42 | Inner side fornot passenger's weight sensor serial ID code inconsistent | |
| | 71-43 | | |
| | 71-44 | Outer side front passenger's weight sensor serial ID code inconsistent | |
| | 71-45 | | |
| | 71-51 | Faulty power supply of ODS unit | |
| | 71-52 | ODS unit does not calibrate | |
| | 71-53 | Communication error between ODS unit and front passenger's weight sensor | |
| | 71-54 | | |
| | 71-55 | Unsuccessful ODS unit calibration | |
| | 71-56 | | |
| | 71-57 | | |

NOTE: The "x" at the end of each DTC denotes a numeric character (0 thru 9) or an alpha character (A thru F) that you will see on the HDS display. The character is unrelated to your troubleshooting; it designates the SRS unit manufacturer and other detail used for product analysis.



BACK

Protected by AR

## Symptom Troubleshooting Index

| Symptom | Diagnostic procedure | Also check for |
|---|---|---|
| SRS indicator does not come on | Symptom Troubleshooting (see page 24-140) | |
| SRS indicator stays on, but no DTCs are stored | Symptom Troubleshooting (see page 24-140) | |
| Side airbag cutoff indicator stays on or is flashing | Symptom Troubleshooting (see page 24-141) | |
| Side airbag cutoff indicator is flashing | Check the DTC. If DTC indicated, go to the DTC troubleshooting | |
| Side airbag cutoff indicator does not come on | Check the DTC. If DTC indicated, go to the DTC troubleshooting | |
| Passenger's airbag cutoff indicator is flashing | Check the DTC. If DTC indicated, go to the DTC troubleshooting | |
| Passenger's airbag cutoff indicator stays on or comes on suddenly | Symptom Troubleshooting (see page 24-142) | |
| Passenger's airbag cutoff indicator does not come on | Check the DTC. If DTC indicated, go to the DTC troubleshooting | |
| HDS does not communicate with the SRS unit or the vehicle | Troubleshoot the DLC circuit (see page 11-229) | |

BACK

Protected by AR



## System Description

### SRS Components

**Airbags**
The SRS is a safety device which, when used with the seat belt, is designed to help protect the driver and front passenger in a frontal impact exceeding a certain set limit. The system consists of the SRS unit, including safing sensor and impact sensor (A), the cable reel (B), the driver's airbag (C), the front passenger's airbag (D), side airbags (E), side curtain airbags (F), seat belt tensioners (G), seat belt buckle tensioners (H), side impact sensors (first) (I), front impact sensors (J), roll rate sensor (K) and side impact sensors (second) (L), since the driver's and front passenger's airbags use the same sensors, both normally inflate at the same time. However, it is possible for only one airbag to inflate. This can occur when the severity of a collision is at the margin, or threshold, that the SRS unit determines whether or not the airbags will deploy. In such cases, the seat belt will provide sufficient protection, and the supplemental protection offered by the airbag would be minimal.

**Front Passenger's Weight Sensors**
The ODS unit (M) is in the front passenger's seat-back. The seat weight sensors (N) are part of the seat. The weight sensors detect the weight on the seat, and sends the information to the ODS unit. If the total weight is about 65 lbs (30 kg) or less, the ODS unit sends a signal to the SRS unit to prevent the font passenger's airbag from deploying. When the front passenger's airbag is disabled, the passenger airbag cutoff indicator on the center panel comes on to alert the driver that the front passenger's airbag will not deploy in a front-end collision.

**Driver's Seat Position Sensor**
The driver's seat position sensor (O) is under the driver's seat on the left side. When the driver's seat is moved to its full forward position, the deployment of the driver's airbag is moderated to decrease its force of impact during a front-end collision.

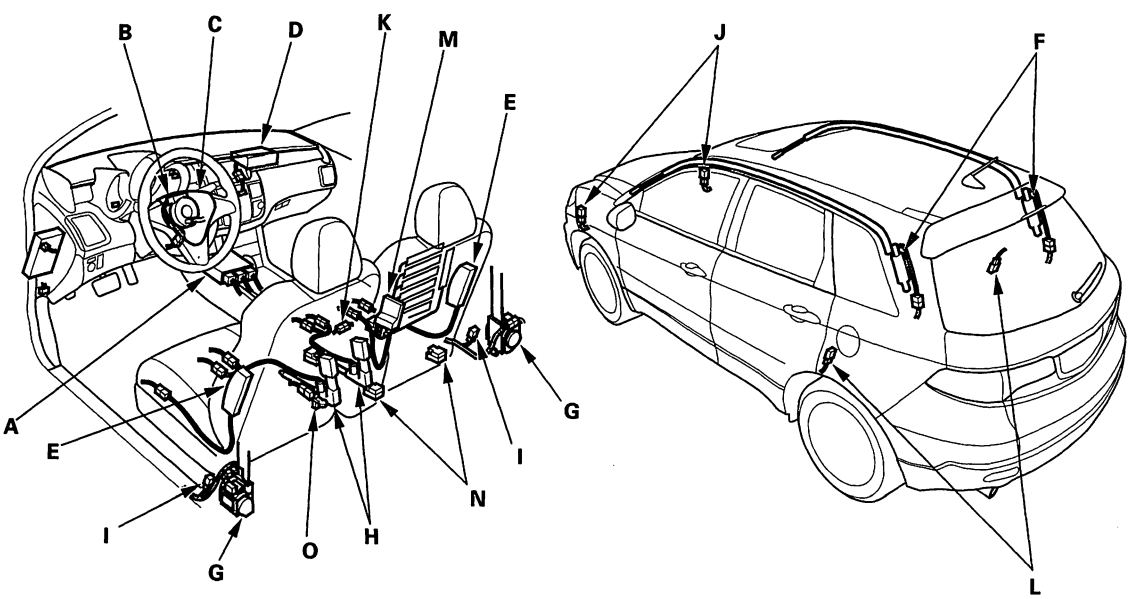




BACK

Protected by AR

**Roll Rate Sensor**
The roll rate sensor is located under the front passenger's seat. It detects the amount of roll of the vehicle and sends the information to the SRS unit. The SRS unit uses this information to determine if a vehicle rollover is imminent. If so, it deploys both side curtain airbags and the front seat belt tensioners.

## Side Airbag Cutoff Indicator/ODS Operation

The indicator comes on if the front passenger's seat is occupied by a small adult or child who is leaning into the deployment path, or an object (grocery bag, briefcase, purse, etc.) is in the seat. The OPDS sensor determines the front passenger's size and location, and it sends this information to the ODS unit. When the indicator comes on, the passenger's side airbag is off and will not deploy; there is no problem with the side airbag. If the passenger sits upright or moves to another seat, or you remove the object from the seat, the light should go off. There will be some delay between the occupant's repositioning, and when the indicator will turn on or off.

## Passenger Airbag Cutoff Indicator

The indicator comes on if the weight of the front passenger is about 65 lbs (30 kg) or less. This indicates the passenger's front airbag is off and will not deploy. The front airbag is shut off to reduce the chance of airbag-caused injuries.

## SRS Operation

The main circuit in the SRS unit senses and judges the force of impact and, if necessary, ignites the inflator charges. If battery voltage is too low or power is disconnected due to the impact, the voltage regulator and the back-up power circuit will keep voltage at a constant level.

**For the SRS to operate**

**Seat Belt Tensioners and Seat Belt Buckle Tensioners**
(1) A front impact sensor, side impact sensor, or the roll rate sensor must activate and send electric signals to the microprocessor.
(2) The microprocessor must compute the signals and send them to the tensioners.
(3) The charges must ignite and deploy the tensioners.

**Driver's and Front Passenger's Airbag(s)**
(1) A front impact sensor must activate, and send electric signals to the microprocessor.
(2) The microprocessor must compute the signals, and send them to the airbag inflator(s).
(3) The inflators that received signals must ignite and deploy the airbags.

**Side Airbag(s)**
(1) A side impact sensor must activate, and send electric signals to the microprocessor.
(2) The microprocessor must compute the signals and send them to the side airbag inflator(s). However, the microprocessor cuts off the signals to the front passenger's side airbag if the SRS unit determines that the front passenger's head is in the deployment path of the side airbag.
(3) The inflator that received the signal must ignite and deploy the side airbag.

**Side Curtain Airbag(s)**
(1) Side impact sensor or the roll rate sensor must activate, and send electrical signals to the microprocessor.
(2) The microprocessor must compute the signals and send them to the side curtain airbag and side airbag inflator(s).
(3) The inflator that received the signals must ignite and deploy the side curtain airbag and side airbag at the same time.

(cont'd)

Protected by AR



## System Description (cont'd)

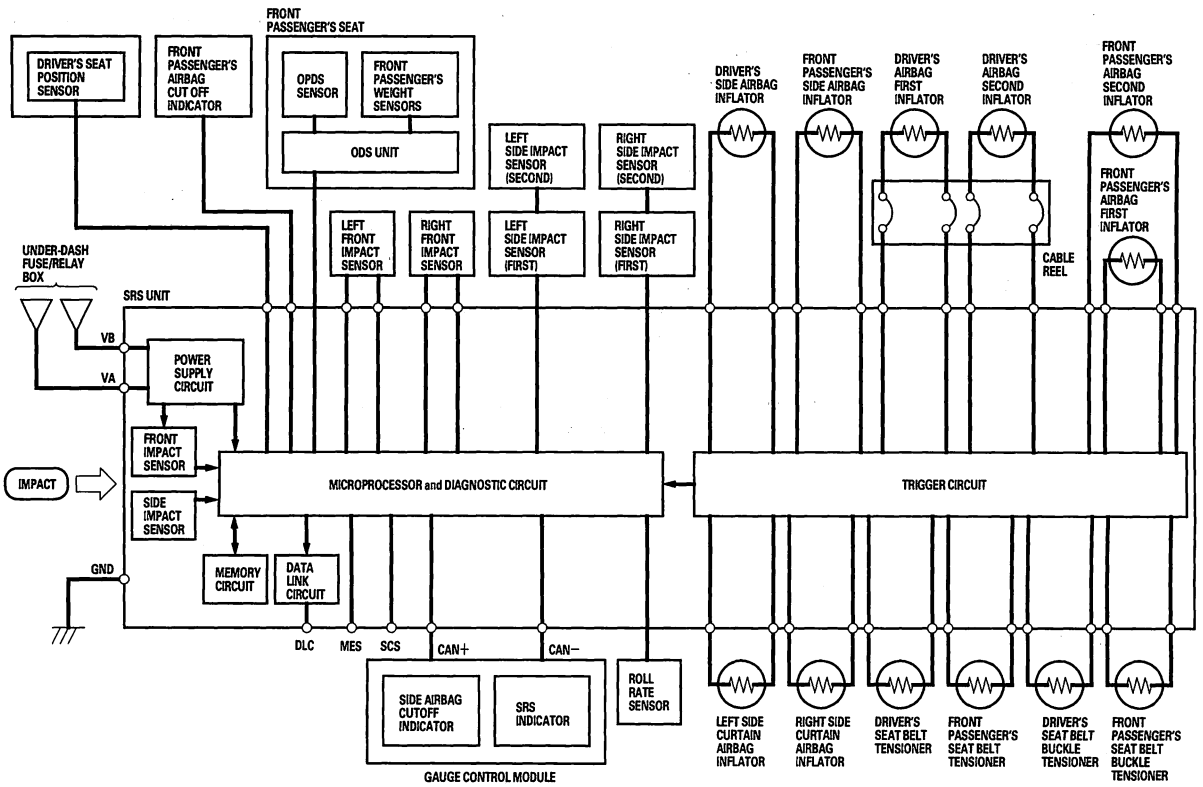


**Self-diagnostic System**

A self-diagnostic circuit is built into the SRS unit; when the ignition switch is turned ON (II), the SRS indicator comes on and goes off after about 6 seconds if the system is operating normally.
If the indicator does not come on, or does not go off after 6 seconds, or if it comes on while driving, it indicates an abnormality in the system. The system must be inspected and repaired as soon as possible.

For better serviceability, the SRS unit memory stores a DTC that relates to the cause of the malfunction, and the unit is connected to the data link connector (DLC). This information can be read with the HDS when it is connected to the DLC (see page 24-24).

NOTE: Before you disconnect the negative cable from the battery for troubleshooting, make sure you have the anti-theft code for the audio or the navigation system. Write down the audio presets.



BACK

Protected by AR

## SRS Unit Inputs and Outputs at Connector A (28P)

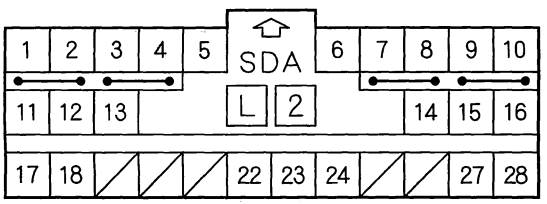


Wire side of female terminals

| Terminal Number | Wire Color | Terminal Name | Description |
|---|---|---|---|
| 1 | GRN | LA2+ | Power source for driver's airbag second inflator |
| 2 | PUR | LA2− | Ground for driver's airbag second inflator |
| 3 | LT GRN | RA2+ | Power source for front passenger's airbag second inflator |
| 4 | LT BLU | RA2− | Ground for front passenger's airbag second inflator |
| 5 | LT GRN | MES | Memory delete signal input |
| 6 | ORN | SCS | Service check signal input |
| 7 | LT BLU | LA1+ | Power source for driver's airbag first inflator |
| 8 | BRN | LA1− | Ground for driver's airbag first inflator |
| 9 | YEL | RA1+ | Power source for front passenger's airbag first inflator |
| 10 | BLU | RA1− | Ground for front passenger's airbag first inflator |
| 11 | WHT | CAN HI | Sends and receives communication signal |
| 12 | RED | CAN LO | Sends and receives communication signal |
| 13 | BLU | PTT | Front passenger's airbag cutoff indicator output line |
| 14 | LT BLU | ODS | Sends and receives communication signal |
| 15 | BRN | LFS− | Ground for left front impact sensor |
| 16 | LT BLU | RFS− | Ground for right front impact sensor |
| 17 | WHT | VA | SRS system sub power (common with ODS) |
| 18 | RED | VB | SRS dedicated power (dedicated booster circuit) |
| 19 | ——— | Not used | ——— |
| 20 | ——— | Not used | ——— |
| 21 | ——— | Not used | ——— |
| 22 | BLK | SRS GND (1) | Ground circuit for the SRS |
| 23 | BLK | SRS GND (2) | Ground circuit for the SRS |
| 24 | LT BLU | K-LINE | Sends and receives scan tool signal |
| 25 | ——— | Not used | ——— |
| 26 | ——— | Not used | ——— |
| 27 | RED | LFS+ | Power source for left front impact sensor |
| 28 | GRN | RFS+ | Power source for right front impact sensor |

(cont'd)

BACK

Protected by AR



## System Description (cont'd)

### SRS Unit Inputs and Outputs at Connector B (28P)

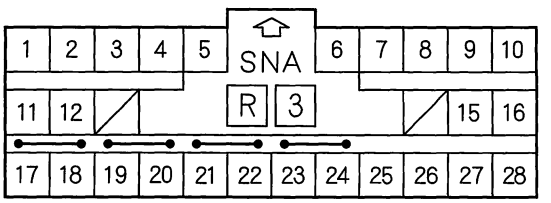


Wire side of female terminals

| Terminal Number | Wire Color | Terminal Name | Description |
|---|---|---|---|
| 1 | RED | LRP+ | Power source for driver's seat belt tensioner |
| 2 | BRN | LRP− | Ground for driver's seat belt tensioner |
| 3 | GRN | RRP+ | Power source for front passenger's seat belt tensioner |
| 4 | LT BLU | RRP− | Ground for front passenger's seat belt tensioner |
| 5 | PNK | SS− | Ground for driver's seat position sensor |
| 6 | RED | SS+ | Power source for driver's seat position sensor |
| 7 | ORN | LBP+ | Power source for driver's buckle tensioner |
| 8 | GRN | LBP− | Ground for driver's buckle tensioner |
| 9 | YEL | RBP+ | Power source for front passenger's buckle tensioner |
| 10 | WHT | RBP− | Ground for front passenger's buckle tensioner |
| 11 | GRY | FLBC | Driver's seat belt buckle switch un-buckled signal |
| 12 | BLU | FLBO | Driver's seat belt buckle switch buckled signal |
| 13 | ——— | Not used | ——— |
| 14 | ——— | Not used | ——— |
| 15 | GRY | FRBC | Front passenger's seat belt buckle switch un-buckled signal |
| 16 | BLU | FRBO | Front passenger's seat belt buckle switch buckled signal |
| 17 | GRN | LSA+ | Power source for driver's side airbag inflator |
| 18 | RED | LSA− | Ground for driver's side airbag inflator |
| 19 | WHT | RSA+ | Power source for front passenger's side airbag inflator |
| 20 | BLU | RSA− | Ground for front passenger's side airbag inflator |
| 21 | BRN | LCA1+ | Power source for left side curtain airbag inflator |
| 22 | BLU | LCA1− | Ground for left side curtain airbag inflator |
| 23 | GRY | RCA1+ | Power source for right side curtain airbag inflator |
| 24 | RED | RCA1− | Ground for right side curtain airbag inflator |
| 25 | PNK | LS1+ | Power source for left side impact sensor (first) and left side impact sensor (second) |
| 26 | GRY | LS1− | Ground for left side impact sensor (first) and left side impact sensor (second) |
| 27 | BRN | RS1+ | Power source for right side impact sensor (first), right side impact sensor (second) |
| 28 | LT GRN | RS1− | Ground for right side impact sensor (first), right side impact sensor (second) |



BACK

Protected by AR

## SRS Unit Inputs and Outputs at Connector C (16P)

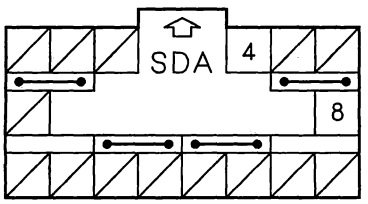


Wire side of female terminals

| Terminal Number | Wire Color | Terminal Name | Description |
|---|---|---|---|
| 1 | —— | Not used | —— |
| 2 | —— | Not used | —— |
| 3 | —— | Not used | —— |
| 4 | BLU | RRS− | Ground for roll rate sensor |
| 5 | —— | Not used | —— |
| 6 | —— | Not used | —— |
| 7 | —— | Not used | —— |
| 8 | RED | RRS+ | Power source for roll rate sensor |
| 9 | —— | Not used | —— |
| 10 | —— | Not used | —— |
| 11 | —— | Not used | —— |
| 12 | —— | Not used | —— |
| 13 | —— | Not used | —— |
| 14 | —— | Not used | —— |
| 15 | —— | Not used | —— |
| 16 | —— | Not used | —— |

BACK

Protected by AR



## Circuit Diagram

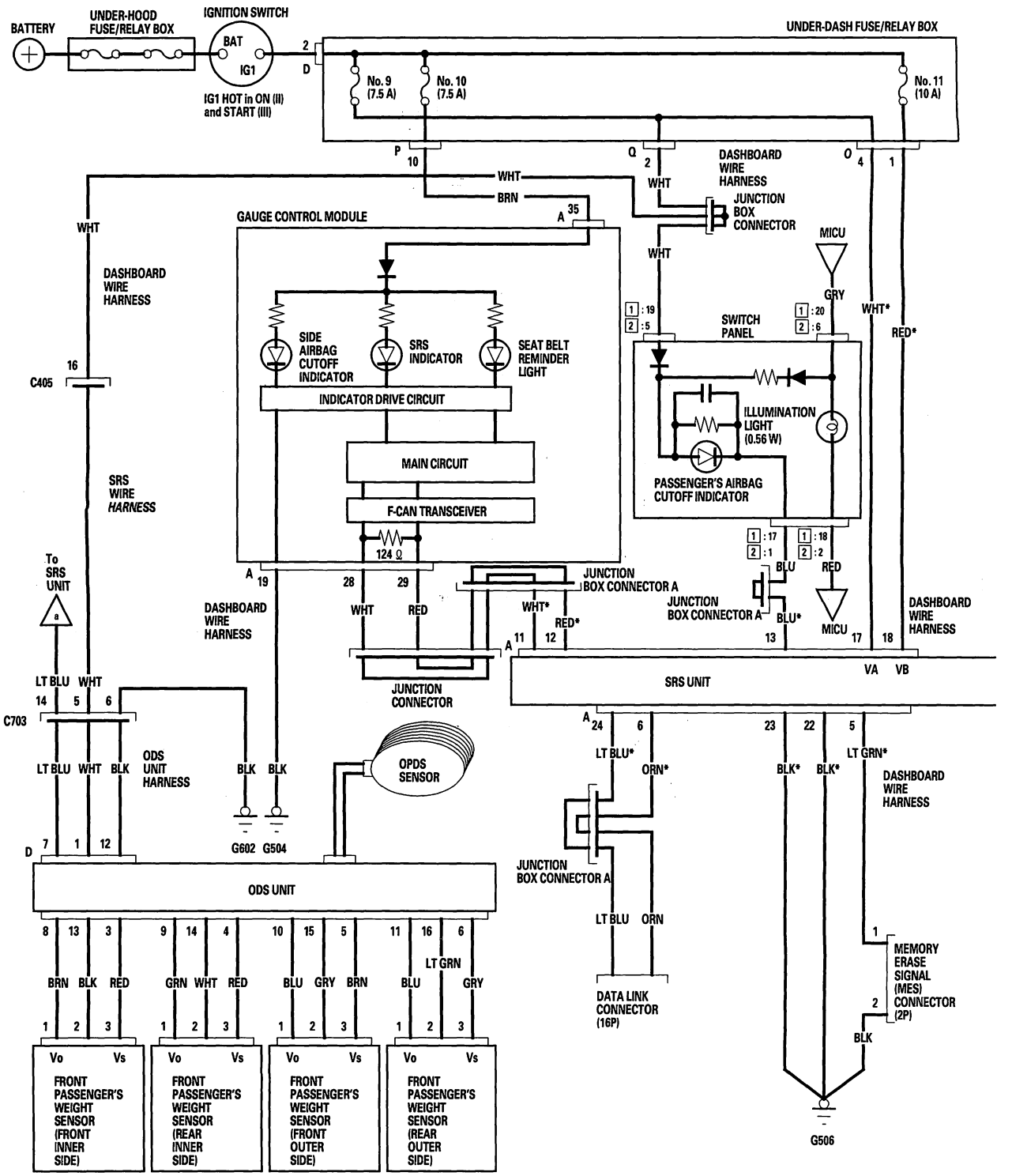




BACK

Protected by AR

1 : With out NAVI.
2 : With NAVI.
BLUE, BROWN, GREEN, GRAY or ORANGE wire color can be used for the SRS circuits that have a * mark

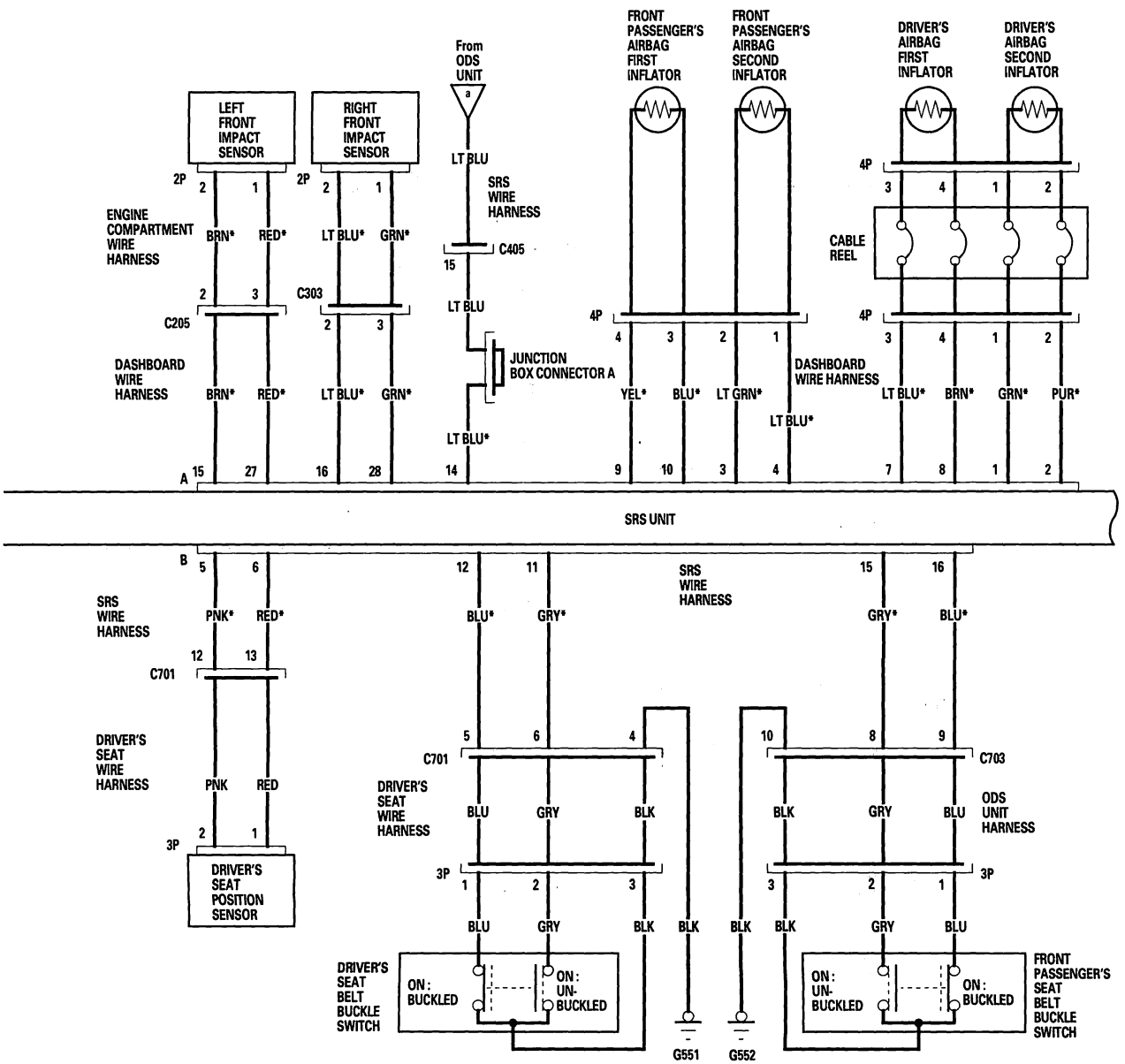


(cont'd)

BACK

Protected by AR



## Circuit Diagram (cont'd)

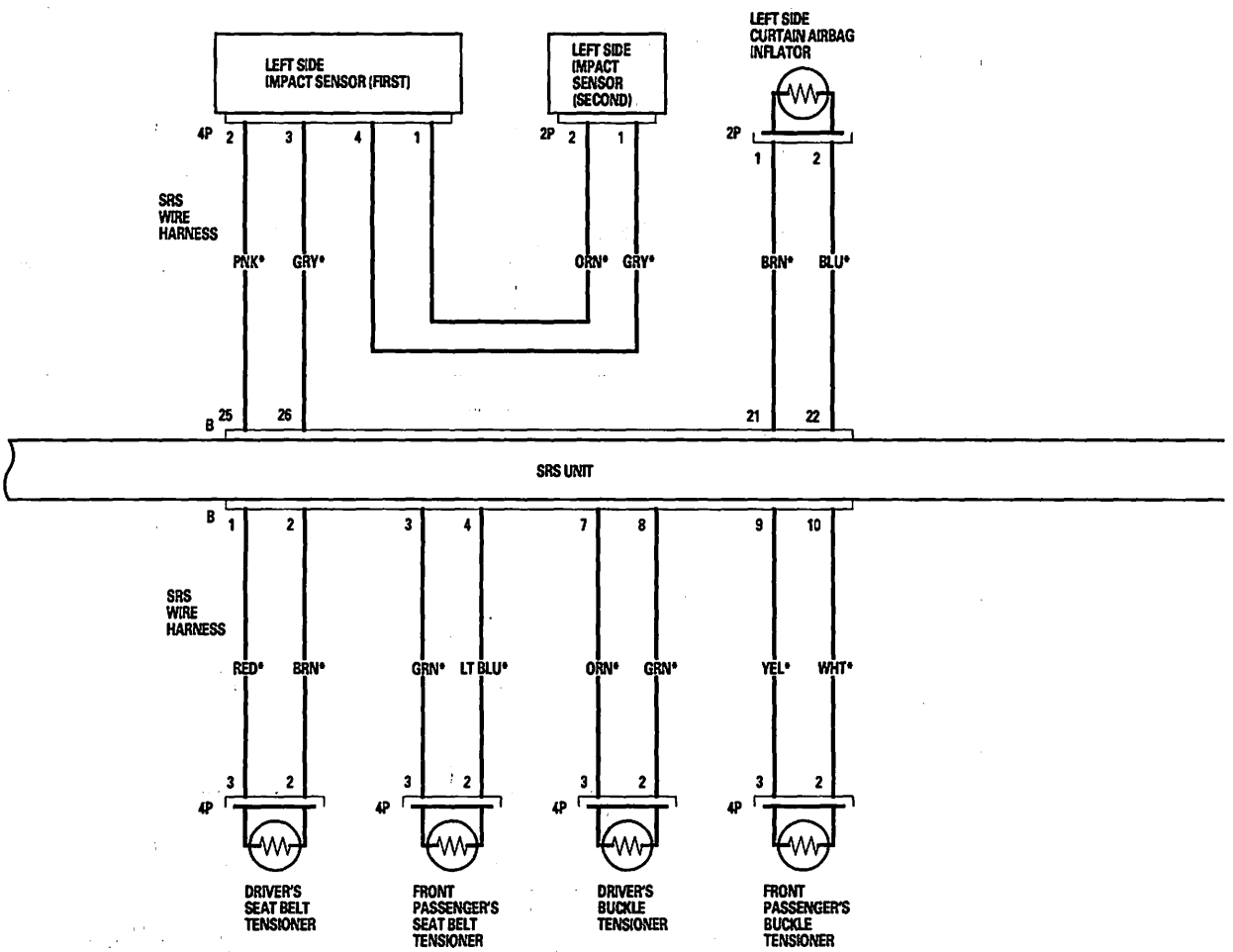




BACK

Protected by AR

BLUE, BROWN, GREEN, GRAY, or ORANGE wire color can be used for the SRS circuits that have a * mark

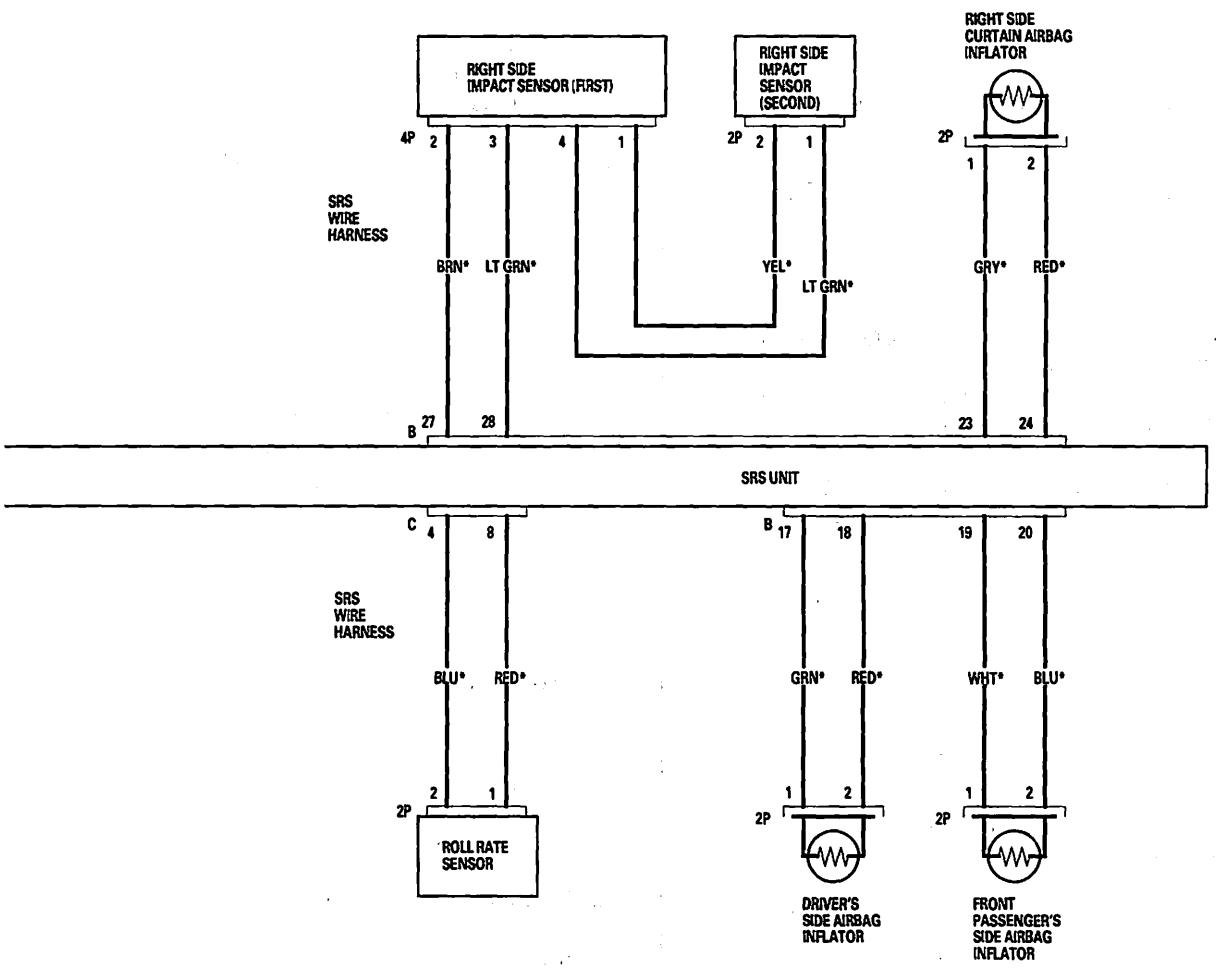


BACK

Protected by AR



## DTC Troubleshooting

**DTC 11-11:** Open in Driver's Airbag First Inflator

**DTC 11-21:** Increased Resistance in Driver's Airbag First Inflator

**DTC 11-41:** Open in Driver's Airbag Second Inflator

**DTC 11-51:** Increased Resistance in Driver's Airbag Second Inflator

**Special Tools Required**
- SRS inflator simulator 07SAZ-TB4011A
- SRS simulator lead J 070AZ-SNAA100

1. Erase the DTC memory (see page 24-25).

2. Turn the ignition switch ON (II), and check that the SRS indicator comes on for about 6 seconds and then goes off.

   *Does the SRS indicator stay on, and is DTC 11-11, 11-21, 11-41, or 11-51 indicated?*

   **YES**—Go to step 3.

   **NO**—Intermittent failure, system is OK at this time. Go to Troubleshooting Intermittent Failures (see page 24-26). If another DTC is indicated, go to the DTC Troubleshooting Index.

3. Turn the ignition switch OFF. Disconnect the negative cable from the battery, and wait for 3 minutes.

4. Disconnect the driver's airbag 4P connector (A) from the cable reel.

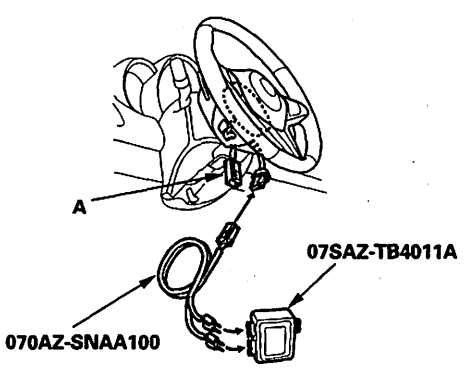


5. Connect the SRS inflator simulator (2 Ω connectors) and simulator lead J to the cable reel.

6. Reconnect the negative cable to the battery.

7. Erase the DTC memory.

8. Read the DTC (see page 24-24).

   *Is DTC 11-11, 11-21, 11-41, or 11-51 indicated?*

   **YES**—Go to step 9.

   **NO**—Open or increased resistance in the driver's airbag first or second inflator; replace the driver's airbag (see page 24-146).■

9. Turn the ignition switch OFF. Disconnect the negative cable from the battery, and wait for 3 minutes.

10. Disconnect the dashboard wire harness 4P connector (A) from the cable reel.

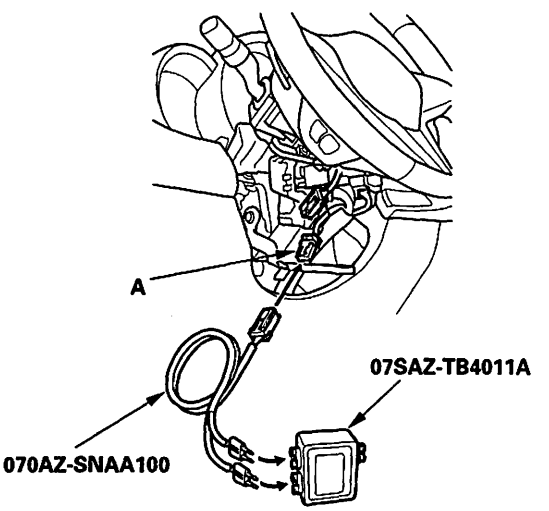


11. Connect the SRS inflator simulator (2 Ω connectors) and simulator lead J to the dashboard wire harness.

12. Reconnect the negative cable to the battery.

13. Erase the DTC memory.



BACK

Protected by AR

14. Read the DTC.

    *Is DTC 11-11, 11-21, 11-41, or 11-51 indicated?*

    **YES**—Go to step 15.

    **NO**—Open or increased resistance in the cable reel; replace the cable reel (see page 24-158). ■

15. Turn the ignition switch OFF. Disconnect the negative cable from the battery, and wait for 3 minutes.

16. Disconnect SRS unit connector A (28P) from the SRS unit (see step 14 on page 24-23).

17. Disconnect the SRS inflator simulator from the SRS simulator lead. Do not disconnect the simulator lead from the dashboard wire harness 4P connector.

18. Check resistance between the terminals of both SRS simulator lead. There should be 1 Ω or less.

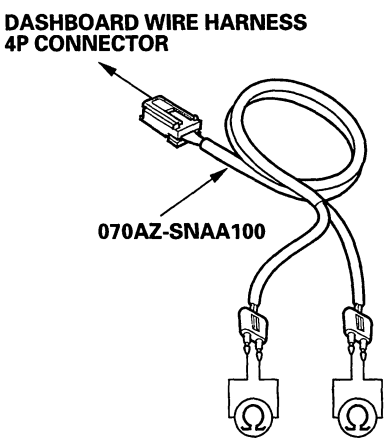


    *Is the resistance as specified?*

    **YES**—Faulty SRS unit or poor connection at SRS unit connector A (28P) and the SRS unit. Check the connection between the connector and the SRS unit. If the connection is OK, replace the SRS unit (see page 24-161). ■

    **NO**—Open or increased resistance in the dashboard wire harness; replace the dashboard wire harness. ■

## DTC 11-31: Short to Another Wire or Decreased Resistance in Driver's Airbag First Inflator

## DTC 11-61: Short to Another Wire or Decreased Resistance in Driver's Airbag Second Inflator

**Special Tools Required**
- SRS inflator simulator 07SAZ-TB4011A
- SRS simulator lead J 070AZ-SNAA100
- SRS short canceller 070AZ-SAA0100

1. Erase the DTC memory (see page 24-25).

2. Turn the ignition switch ON (II), and check that the SRS indicator comes on for about 6 seconds and then goes off.

   *Does the SRS indicator stay on, and is DTC 11-31 or 11-61 indicated?*

   **YES**—Go to step 3.

   **NO**—Intermittent failure, system is OK at this time. Go to Troubleshooting Intermittent Failures (see page 24-26). If another DTC is indicated, go to the DTC Troubleshooting Index.

3. Turn the ignition switch OFF. Disconnect the negative cable from the battery, and wait for 3 minutes.

4. Disconnect the driver's airbag 4P connector (A) from the cable reel.

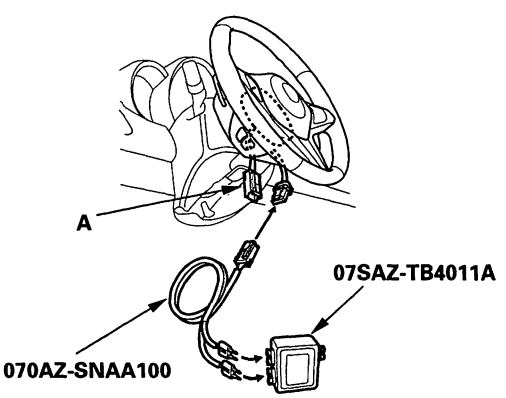


5. Connect the SRS inflator simulator (2 Ω connectors) and simulator lead J to the cable reel.

(cont'd)

Protected by AR



## DTC Troubleshooting (cont'd)

6. Reconnect the negative cable to the battery.

7. Erase the DTC memory.

8. Read the DTC (see page 24-24).

   *Is DTC 11-31 or 11-61 indicated?*

   **YES**—Go to step 9.

   **NO**—Short in the driver's airbag first or second inflator; replace the driver's airbag (see page 24-146).■

9. Turn the ignition switch OFF. Disconnect the negative cable from the battery, and wait for 3 minutes.

10. Disconnect the dashboard wire harness 4P connector (A) from the cable reel.

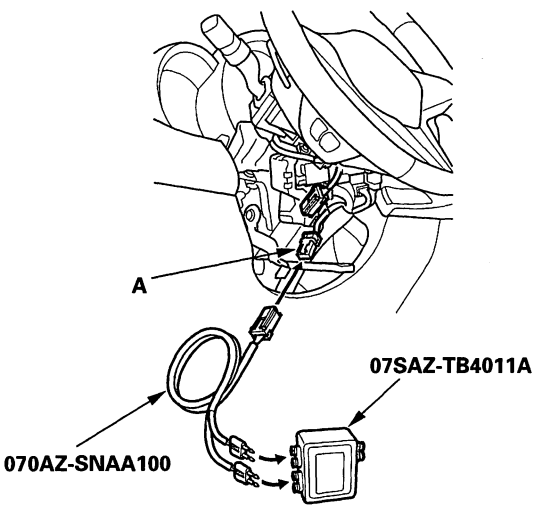


11. Connect the SRS inflator simulator (2 Ω connectors) and the simulator lead to the dashboard wire harness.

12. Reconnect the negative cable to the battery.

13. Erase the DTC memory.

14. Read the DTC.

    *Is DTC 11-31 or 11-61 indicated?*

    **YES**—Go to step 15.

    **NO**—Short in the cable reel; replace the cable reel (see page 24-158).■

15. Turn the ignition switch OFF. Disconnect the negative cable from the battery, and wait for 3 minutes.

16. Disconnect SRS unit connector A (28P) from the SRS unit (see step 14 on page 24-23).

17. Disconnect the SRS inflator simulator from the SRS simulator lead. Do not disconnect the simulator lead from the dashboard wire harness 4P connector.

18. Connect a SRS short canceller (070AZ-SAA0100) to No. 7 and No. 8 terminals and No. 1 and No. 2 terminals of the SRS unit connector A (28P) (see page 24-19).

19. Check resistance between the terminals of both SRS simulator leads. There should be an open circuit or at least 1 MΩ.

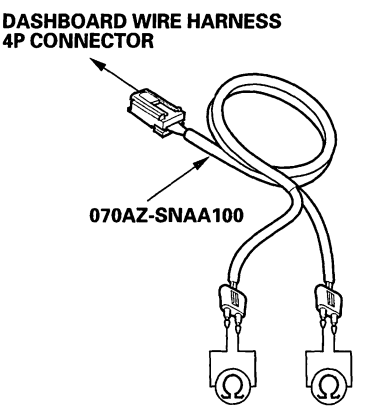


    *Is the resistance as specified?*

    **YES**—Faulty SRS unit or poor connection at SRS unit connector A (28P) and the SRS unit. Check the connection between the connector and the SRS unit. If the connection is OK, replace the SRS unit (see page 24-161).■

    **NO**—Short in the dashboard wire harness; replace the dashboard wire harness.■



BACK

Protected by AR

## DTC 11-81: Short to Power in Driver's Airbag First Inflator

## DTC 11-A1: Short to Power in Driver's Airbag Second Inflator

**Special Tools Required**
- SRS inflator simulator 07SAZ-TB4011A
- SRS simulator lead J 070AZ-SNAA100

1. Erase the DTC memory (see page 24-25).

2. Turn the ignition switch ON (II), and check that the SRS indicator comes on for about 6 seconds and then goes off.

   *Does the SRS indicator stay on, and is DTC 11-81 or 11-A1 indicated?*

   **YES**—Go to step 3.

   **NO**—Intermittent failure, system is OK at this time. Go to Troubleshooting Intermittent Failures (see page 24-26). If another DTC is indicated, go to the DTC Troubleshooting Index.

3. Turn the ignition switch OFF. Disconnect the negative cable from the battery, and wait for 3 minutes.

4. Disconnect the driver's airbag 4P connector (A) from the cable reel.

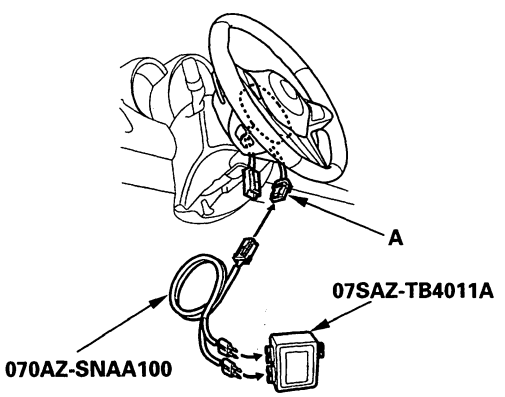


5. Connect the SRS inflator simulator (2 Ω connectors) and simulator lead J to the cable reel.

6. Reconnect the negative cable to the battery.

7. Erase the DTC memory.

8. Read the DTC (see page 24-24).

   *Is DTC 11-81 or 11-A1 indicated?*

   **YES**—Go to step 9.

   **NO**—Short to power in the driver's airbag first or second inflator; replace the driver's airbag (see page 24-146). ■

9. Turn the ignition switch OFF. Disconnect the negative cable from the battery, and wait for 3 minutes.

10. Disconnect the dashboard wire harness 4P connector (A) from the cable reel.

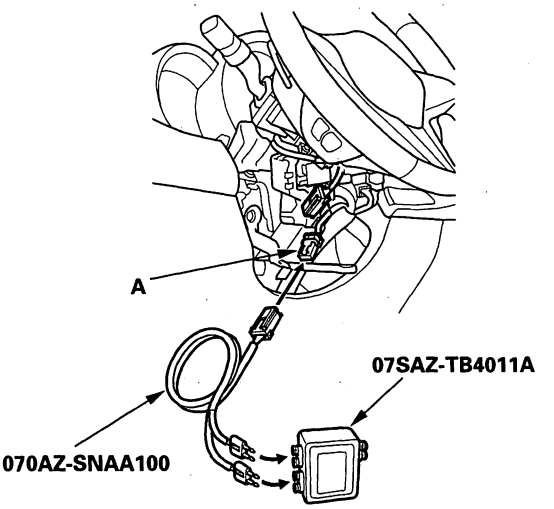


11. Connect the SRS inflator simulator (2 Ω connectors) and the simulator lead to the dashboard wire harness.

12. Reconnect the negative cable to the battery.

13. Erase the DTC memory.

(cont'd)

Protected by AR



## DTC Troubleshooting (cont'd)

14. Read the DTC.

    *Is DTC 11-81 or 11-A1 indicated?*

    **YES**—Go to step 15.

    **NO**—Short to power in the cable reel; replace the cable reel (see page 24-158).■

15. Turn the ignition switch OFF. Disconnect the negative cable from the battery, and wait for 3 minutes.

16. Disconnect SRS unit connector A (28P) from the SRS unit (see step 14 on page 24-23).

17. Disconnect the SRS inflator simulator from the SRS simulator lead. Do not disconnect the simulator lead from the dashboard wire harness 4P connector.

18. Reconnect the negative cable to the battery.

19. Turn the ignition switch ON (II).

20. Check for voltage between each terminal of the SRS simulator lead and body ground. There should be 0.5 V or less.

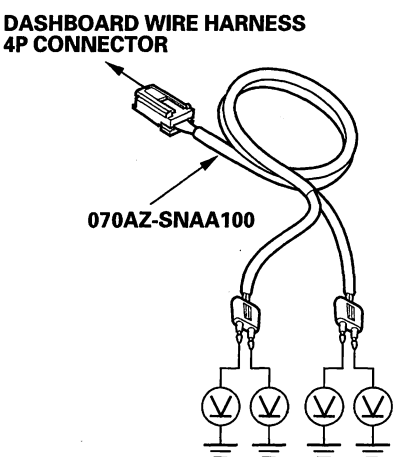


*Is the voltage as specified?*

**YES**—Faulty SRS unit or poor connection at SRS unit connector A (28P) and the SRS unit. Check the connection between the connector and the SRS unit. If the connection is OK, replace the SRS unit (see page 24-161).■

**NO**—Short to power in the dashboard wire harness; replace the dashboard wire harness.■

### DTC 11-91: Short to Ground in Driver's Airbag First Inflator

### DTC 11-B1: Short to Ground in Driver's Airbag Second Inflator

**Special Tools Required**
- SRS inflator simulator 07SAZ-TB4011A
- SRS simulator lead J 070AZ-SNAA100

1. Erase the DTC memory (see page 24-25).

2. Turn the ignition switch ON (II), and check that the SRS indicator comes on for about 6 seconds and then goes off.

   *Does the SRS indicator stay on, and is DTC 11-91 or 11-B1 indicated?*

   **YES**—Go to step 3.

   **NO**—Intermittent failure, system is OK at this time. Go to Troubleshooting Intermittent Failures (see page 24-26). If another DTC is indicated, go to the DTC Troubleshooting Index.

3. Turn the ignition switch OFF. Disconnect the negative cable from the battery, and wait for 3 minutes.

4. Disconnect the driver's airbag 4P connector (A) from the cable reel.

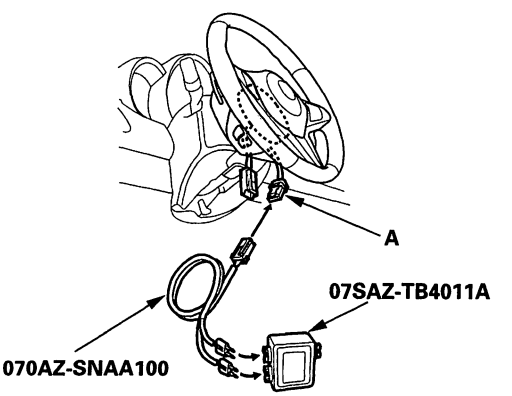


5. Connect the SRS inflator simulator (2 Ω connectors) and simulator lead J to the cable reel.



BACK

Protected by AR

6. Reconnect the negative cable to the battery.

7. Erase the DTC memory.

8. Read the DTC (see page 24-24).

   *Is DTC 11-91 or 11-B1 indicated?*

   **YES**—Go to step 9.

   **NO**—Short to ground in the driver's airbag first or second inflator; replace the driver's airbag (see page 24-146).■

9. Turn the ignition switch OFF. Disconnect the negative cable from the battery, and wait for 3 minutes.

10. Disconnect the dashboard wire harness 4P connector (A) from the cable reel.

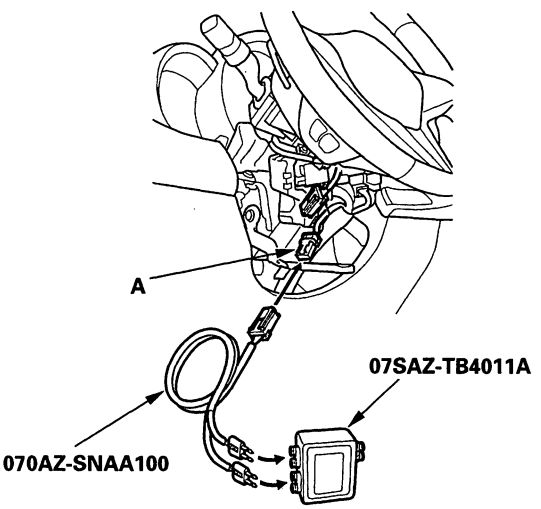


11. Connect the SRS inflator simulator (2 Ω connectors) and the simulator lead to the dashboard wire harness.

12. Reconnect the negative cable to the battery.

13. Erase the DTC memory.

14. Read the DTC.

    *Is DTC 11-91 or 11-B1 indicated?*

    **YES**—Go to step 15.

    **NO**—Short to ground in the cable reel; replace the cable reel (see page 24-158).■

15. Turn the ignition switch OFF. Disconnect the negative cable from the battery, and wait for 3 minutes.

16. Disconnect SRS unit connector A (28P) from the SRS unit (see step 14 on page 24-23).

17. Disconnect the SRS inflator simulator from the SRS simulator lead. Do not disconnect the simulator lead from the dashboard wire harness 4P connector.

18. Check resistance between each terminal of the SRS simulator lead and body ground. There should be an open circuit or at least 1 MΩ.

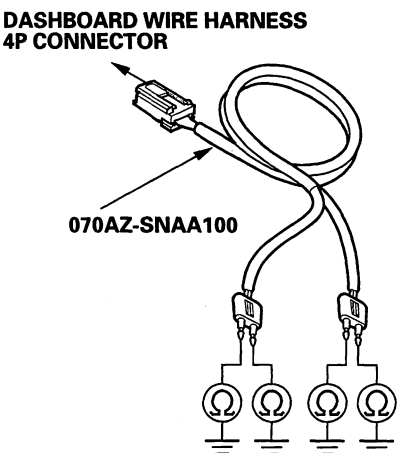


*Is the resistance as specified?*

**YES**—Faulty SRS unit or poor connection at SRS unit connector A (28P) and the SRS unit. Check the connection between the connector and the SRS unit. If the connection is OK, replace the SRS unit (see page 24-161).■

**NO**—Short to ground in the dashboard wire harness; replace the dashboard wire harness.■

Protected by AR



## DTC Troubleshooting (cont'd)

**DTC 12-11:** Open in Front Passenger's Airbag First Inflator

**DTC 12-21:** Increased Resistance in Front Passenger's Airbag First Inflator

**DTC 12-41:** Open in Front Passenger's Airbag Second Inflator

**DTC 12-51:** Increased Resistance in Front Passenger's Airbag Second Inflator

**Special Tools Required**
- SRS inflator simulator 07SAZ-TB4011A
- SRS simulator lead J 070AZ-SNAA100

1. Erase the DTC memory (see page 24-25).

2. Turn the ignition switch ON (II), and check that the SRS indicator comes on for about 6 seconds and then goes off.

   *Does the SRS indicator stay on, and is DTC 12-11, 12-21, 12-42, or 12-51 indicated?*

   **YES**—Go to step 3.

   **NO**—Intermittent failure, system is OK at this time. Go to Troubleshooting Intermittent Failures (see page 24-26). If another DTC is indicated, go to the DTC Troubleshooting Index.

3. Turn the ignition switch OFF. Disconnect the negative cable from the battery, and wait for 3 minutes.

4. Disconnect the front passenger's airbag 4P connector (A) from dashboard wire harness.

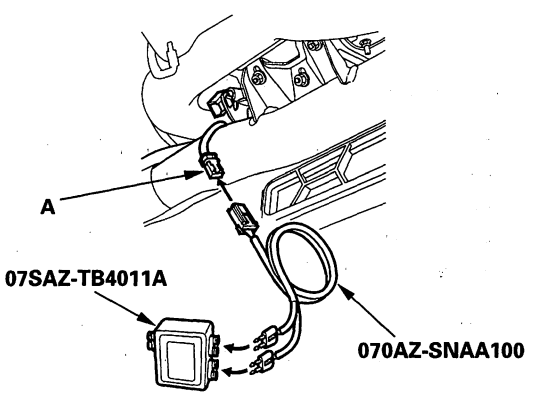


5. Connect the SRS inflator simulator (2 Ω connectors) and simulator lead J to the dashboard wire harness.

6. Reconnect the negative cable to the battery.

7. Erase the DTC memory.

8. Read the DTC (see page 24-24).

   *Is DTC 12-11, 12-21, 12-41, or 12-51 indicated?*

   **YES**—Go to step 9.

   **NO**—Open or increased resistance in the front passenger's airbag first or second inflator; replace the front passenger's airbag (see page 24-147). ■

9. Turn the ignition switch OFF. Disconnect the negative cable from the battery, and wait for 3 minutes.

10. Disconnect SRS unit connector A (28P) from the SRS unit (see step 14 on page 24-23).

11. Disconnect the SRS inflator simulator from the SRS simulator lead. Do not disconnect the simulator lead from the dashboard wire harness 4P connector.

12. Check resistance between the terminals of both SRS simulator leads. There should be 1 Ω or less.

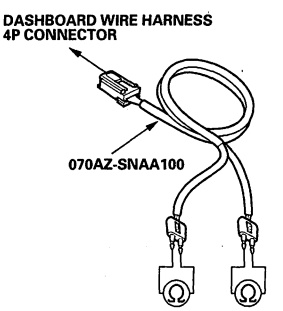


   *Is the resistance as specified?*

   **YES**—Faulty SRS unit or poor connection at SRS unit connector A (28P). Check the connection; if the connection is OK, replace the SRS unit (see page 24-161). ■

   **NO**—Open or increased resistance in the dashboard wire harness; replace the dashboard wire harness. ■



BACK

Protected by AR

## DTC 12-31: Short to Another Wire or Decreased Resistance in Front Passenger's Airbag First Inflator

## DTC 12-61: Short to Another Wire or Decreased Resistance in Front Passenger's Airbag Second Inflator

**Special Tools Required**
- SRS inflator simulator 07SAZ-TB4011A
- SRS simulator lead J 070AZ-SNAA100
- SRS short canceller 070AZ-SAA0100

1. Erase the DTC memory (see page 24-25).

2. Turn the ignition switch ON (II), and check that the SRS indicator comes on for about 6 seconds and then goes off.

   *Does the SRS indicator stay on, and is DTC 12-31 or 12-61 indicated?*

   **YES**—Go to step 3.

   **NO**—Intermittent failure, system is OK at this time. Go to Troubleshooting Intermittent Failures (see page 24-26). If another DTC is indicated, go to the DTC Troubleshooting Index.

3. Turn the ignition switch OFF. Disconnect the negative cable from the battery, and wait for 3 minutes.

4. Disconnect the front passenger's airbag 4P connector (A) from the dashboard wire harness.

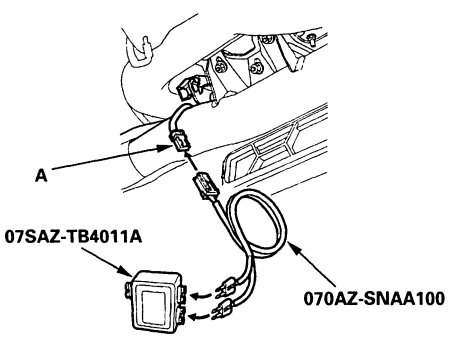


5. Connect the SRS inflator simulator (2 Ω connectors) and simulator lead J to dashboard wire harness.

6. Reconnect the negative cable to the battery.

7. Erase the DTC memory.

8. Read the DTC (see page 24-24).

   *Is DTC 12-31 or 12-61 indicated?*

   **YES**—Go to step 9.

   **NO**—Short in the front passenger's airbag first or second inflator; replace the front passenger's airbag (see page 24-147). ■

9. Turn the ignition switch OFF. Disconnect the negative cable from the battery, and wait for 3 minutes.

10. Disconnect SRS unit connector A (28P) from the SRS unit (see step 14 on page 24-23).

11. Disconnect the SRS inflator simulator from the SRS simulator lead. Do not disconnect the simulator lead from the dashboard wire harness 4P connector.

12. Connect a SRS short canceller (070AZ-SAA0100) to No. 9 and No. 10 terminals, and the No. 3 and No. 4 terminals of the SRS unit connector A (28P) (see page 24-19).

13. Check resistance between the terminals of both SRS simulator leads. There should be an open circuit or at least 1 MΩ.

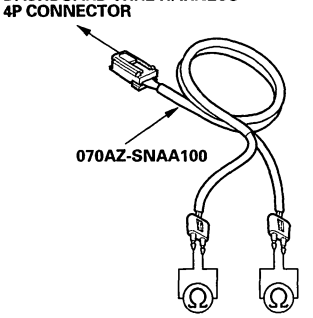


   *Is the resistance as specified?*

   **YES**—Faulty SRS unit or poor connection at SRS unit connector A (28P) and the SRS unit. Check the connection between the connector and the SRS unit. If the connection is OK, replace the SRS unit (see page 24-161). ■

   **NO**—Short in the dashboard wire harness; replace the dashboard wire harness. ■

Protected by AR



## DTC Troubleshooting (cont'd)

### DTC 12-81: Short to Power in Front Passenger's Airbag First Inflator

### DTC 12-A1: Short to Power in Front Passenger's Airbag Second Inflator

**Special Tools Required**
- SRS inflator simulator 07SAZ-TB4011A
- SRS simulator lead J 070AZ-SNAA100

1. Erase the DTC memory (see page 24-25).

2. Turn the ignition switch ON (II), and check that the SRS indicator comes on for about 6 seconds and then goes off.

   *Does the SRS indicator stay on, and is DTC 12-81 or 12-A1 indicated?*

   **YES**—Go to step 3.

   **NO**—Intermittent failure, system is OK at this time. Go to Troubleshooting Intermittent Failures (see page 24-26). If another DTC is indicated, go to the DTC Troubleshooting Index.

3. Turn the ignition switch OFF. Disconnect the negative cable from the battery, and wait for 3 minutes.

4. Disconnect the front passenger's airbag 4P connector (A) from dashboard wire harness.

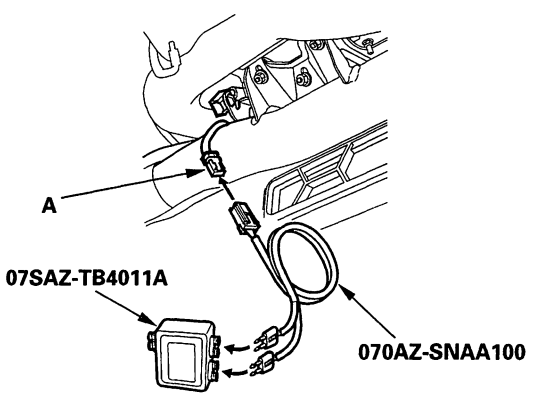


5. Connect the SRS inflator simulator (2 Ω connectors) and simulator lead J to the dashboard wire harness.

6. Reconnect the negative cable to the battery.

7. Erase the DTC memory.

8. Read the DTC (see page 24-24).

   *Is DTC 12-81 or 12-A1 indicated?*

   **YES**—Go to step 9.

   **NO**—Short to power in the front passenger's airbag first or second inflator; replace the front passenger's airbag (see page 24-147).■

9. Turn the ignition switch OFF. Disconnect the negative cable from the battery, and wait for 3 minutes.

10. Disconnect SRS unit connector A (28P) from the SRS unit (see step 14 on page 24-23).

11. Disconnect the SRS inflator simulator from the SRS simulator lead. Do not disconnect the simulator lead from the dashboard wire harness 4P connector.

12. Reconnect the negative cable to the battery.

13. Turn the ignition switch ON (II).

14. Check for voltage between each terminal of the SRS simulator lead and body ground. There should be 0.5 V or less.

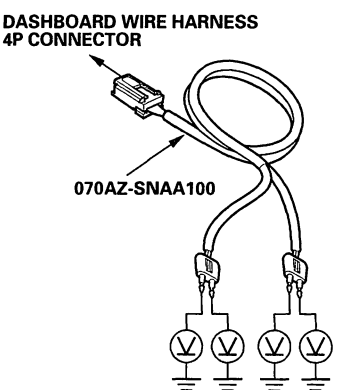


   *Is the voltage as specified?*

   **YES**—Faulty SRS unit or poor connection at SRS unit connector A (28P) and the SRS unit. Check the connection between the connector and the SRS unit. If the connection is OK, replace the SRS unit (see page 24-161).■

   **NO**—Short to power in the dashboard wire harness; replace the dashboard wire harness.■



BACK

Protected by AR

## DTC 12-91: Short to Ground in Front Passenger's Airbag First Inflator

## DTC 12-B1: Short to Ground in Front Passenger's Airbag Second Inflator

**Special Tools Required**
- SRS inflator simulator 07SAZ-TB4011A
- SRS simulator lead J 070AZ-SNAA100

1. Erase the DTC memory (see page 24-25).

2. Turn the ignition switch ON (II), and check that the SRS indicator comes on for about 6 seconds and then goes off.

   *Does the SRS indicator stay on, and is DTC 12-91 or 12-B1 indicated?*

   **YES**—Go to step 3.

   **NO**—Intermittent failure, system is OK at this time. Go to Troubleshooting Intermittent Failures (see page 24-26). If another DTC is indicated, go to the DTC Troubleshooting Index.

3. Turn the ignition switch OFF. Disconnect the negative cable from the battery, and wait for 3 minutes.

4. Disconnect the front passenger's airbag 4P connector (A) from the dashboard wire harness.

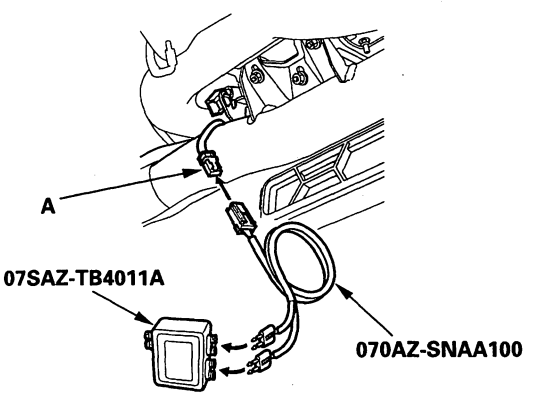


5. Connect the SRS inflator simulator (2 Ω connectors) and simulator lead J to the dashboard wire harness.

6. Reconnect the negative cable to the battery.

7. Erase the DTC memory.

8. Read the DTC (see page 24-24).

   *Is DTC 12-91 or 12-B1 indicated?*

   **YES**—Go to step 9.

   **NO**—Short to ground in the front passenger's airbag first or second inflator; replace the front passenger's airbag (see page 24-147). ■

9. Turn the ignition switch OFF. Disconnect the negative cable from the battery, and wait for 3 minutes.

10. Disconnect SRS unit connector A (28P) from the SRS unit (see step 14 on page 24-23).

11. Disconnect the SRS inflator simulator from the SRS simulator lead. Do not disconnect the simulator lead from the dashboard wire harness 4P connector.

12. Check resistance between each terminal of the SRS simulator lead and body ground. There should be an open circuit or at least 1 MΩ.

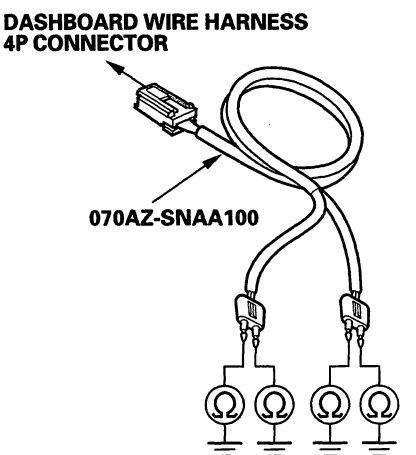


*Is the resistance as specified?*

**YES**—Faulty SRS unit or poor connection at SRS unit connector A (28P) and the SRS unit. Check the connection between the connector and the SRS unit. If the connection is OK, replace the SRS unit (see page 24-161). ■

**NO**—Short to ground in the dashboard wire harness; replace the dashboard wire harness. ■

Protected by AR



## DTC Troubleshooting (cont'd)

### DTC 21-11: Open in Driver's Seat Belt Tensioner

### DTC 21-21: Increased Resistance in Driver's Seat Belt Tensioner

**Special Tools Required**
- SRS inflator simulator 07SAZ-TB4011A
- SRS simulator lead K 070AZ-SNAA200

1. Erase the DTC memory (see page 24-25).

2. Turn the ignition switch ON (II), and check that the SRS indicator comes on for about 6 seconds and then goes off.

   *Does the SRS indicator stay on, and is DTC 21-11 or 21-21 indicated?*

   **YES**—Go to step 3.

   **NO**—Intermittent failure, system is OK at this time. Go to Troubleshooting Intermittent Failures (see page 24-26). If another DTC is indicated, go to the DTC Troubleshooting Index.

3. Turn the ignition switch OFF. Disconnect the negative cable from the battery, and wait for 3 minutes.

4. Disconnect the SRS wire harness 4P connector (A) from the driver's seat belt tensioner.

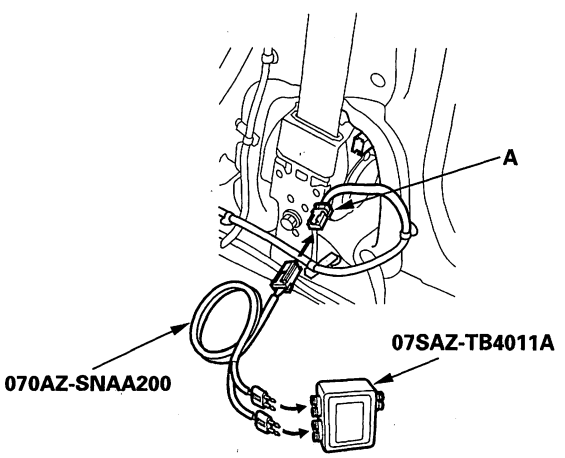


5. Connect the SRS inflator simulator (2 Ω connectors) and simulator lead K to the floor wire harness.

6. Reconnect the negative cable to the battery.

7. Erase the DTC memory.

8. Read the DTC (see page 24-24).

   *Is DTC 21-11 or 21-21 indicated?*

   **YES**—Go to step 9.

   **NO**—Open or increased resistance in the driver's seat belt tensioner; replace the driver's seat belt (see page 24-4). ■

9. Turn the ignition switch OFF. Disconnect the negative cable from the battery, and wait for 3 minutes.

10. Disconnect both seat belt buckle tensioner 4P connectors (see step 11 on page 24-23) and the front passenger's seat belt tensioner 4P connector (see step 10 on page 24-23).

11. Disconnect SRS unit connector B (28P) from the SRS unit (see step 14 on page 24-23).

12. Check resistance between the No. 1 and the No. 2 terminals of SRS unit connector B (28P). There should be 2.0—3.0 Ω.

**SRS UNIT CONNECTOR B (28P)**

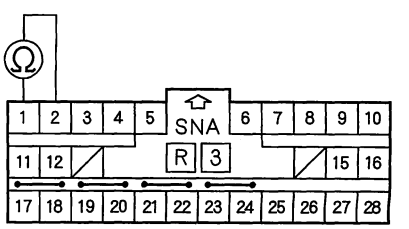


Wire side of female terminals

*Is resistance as specified?*

**YES**—Faulty SRS unit or poor connection at SRS unit connector B (28P) and the SRS unit. Check the connection; if the connection is OK, replace the SRS unit (see page 24-161). ■

**NO**—Open or increased resistance in the SRS wire harness; replace the SRS wire harness. ■



BACK

Protected by AR

## DTC 21-31: Short to Another Wire or Decreased Resistance in Driver's Seat Belt Tensioner

**Special Tools Required**
- SRS inflator simulator 07SAZ-TB4011A
- SRS simulator lead K 070AZ-SNAA200

1. Erase the DTC memory (see page 24-25).

2. Turn the ignition switch ON (II), and check that the SRS indicator comes on for about 6 seconds and then goes off.

   *Does the SRS indicator stay on, and is DTC 21-31 indicated?*

   **YES**—Go to step 3.

   **NO**—Intermittent failure, system is OK at this time. Go to Troubleshooting Intermittent Failures (see page 24-26). If another DTC is indicated, go to the DTC Troubleshooting Index.

3. Turn the ignition switch OFF. Disconnect the negative cable from the battery, and wait for 3 minutes.

4. Disconnect the SRS wire harness 4P connector (A) from the driver's seat belt tensioner.

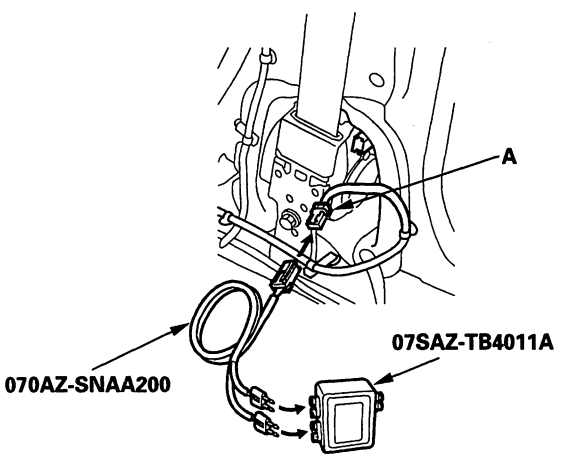


5. Connect the SRS inflator simulator (2 Ω connectors) and simulator lead K to the SRS wire harness.

6. Reconnect the negative cable to the battery.

7. Erase the DTC memory.

8. Read the DTC (see page 24-24).

   *Is DTC 21-31 indicated?*

   **YES**—Go to step 9.

   **NO**—Short in the driver's seat belt tensioner; replace the driver's seat belt (see page 24-4). ■

9. Turn the ignition switch OFF. Disconnect the negative cable from the battery, and wait for 3 minutes.

10. Disconnect both seat belt buckle tensioner 4P connectors (see step 11 on page 24-23) and the front passenger's seat belt tensioner 4P connector (see step 10 on page 24-23).

11. Disconnect SRS unit connector B (28P) from the SRS unit (see step 14 on page 24-23).

12. Disconnect the simulator lead from the SRS wire harness.

13. Check resistance between the No. 1 and the No. 2 terminals of SRS unit connector B (28P). There should be an open circuit or at least 1 MΩ.

**SRS UNIT CONNECTOR B (28P)**

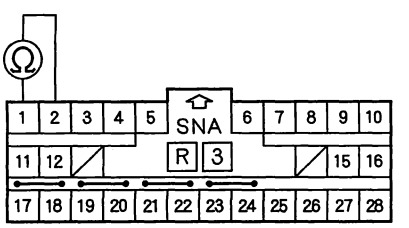


Wire side of female terminals

*Is the resistance as specified?*

**YES**—Faulty SRS unit or poor connection at SRS unit connector B (28P) and the SRS unit. Check the connection; if the connection is OK, replace the SRS unit (see page 24-161). ■

**NO**—Short in the SRS wire harness; replace the SRS wire harness. ■

Protected by AR



## DTC Troubleshooting (cont'd)

### DTC 21-81: Short to Power in Driver's Seat Belt Tensioner

**Special Tools Required**
- SRS inflator simulator 07SAZ-TB4011A
- SRS simulator lead K 070AZ-SNAA200

1. Erase the DTC memory (see page 24-25).

2. Turn the ignition switch ON (II), and check that the SRS indicator comes on for about 6 seconds and then goes off.

   *Does the SRS indicator stay on, and is DTC 21-81 indicated?*

   **YES**—Go to step 3.

   **NO**—Intermittent failure, system is OK at this time. Go to Troubleshooting Intermittent Failures (see page 24-26). If another DTC is indicated, go to the DTC Troubleshooting Index.

3. Turn the ignition switch OFF. Disconnect the negative cable from the battery, and wait for 3 minutes.

4. Disconnect the SRS wire harness 4P connector (A) from the driver's seat belt tensioner.

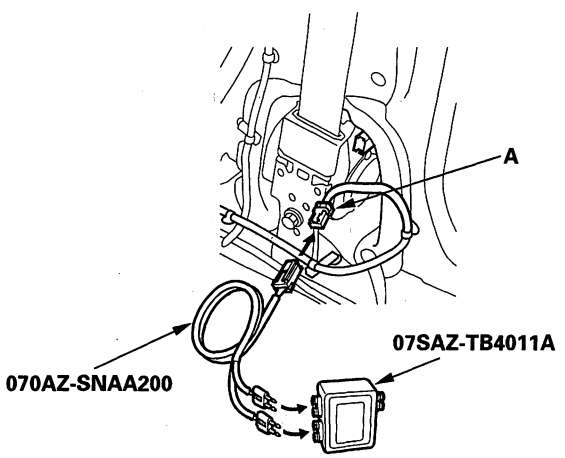


5. Connect the SRS inflator simulator (2 Ω connectors) and simulator lead K to the SRS wire harness.

6. Reconnect the negative cable to the battery.

7. Erase the DTC memory.

8. Read the DTC (see page 24-24).

   *Is DTC 21-81 indicated?*

   **YES**—Go to step 9.

   **NO**—Short to power in the driver's seat belt tensioner; replace the driver's seat belt (see page 24-4). ■

9. Turn the ignition switch OFF. Disconnect the negative cable from the battery, and wait for 3 minutes.

10. Disconnect both seat belt buckle tensioner 4P connectors (see step 11 on page 24-23) and the front passenger's seat belt tensioner 4P connector (see step 10 on page 24-23).

11. Disconnect SRS unit connector B (28P) from the SRS unit (see step 14 on page 24-23).

12. Disconnect the simulator lead from the SRS wire harness.

13. Reconnect the negative cable to the battery.

14. Turn the ignition switch ON (II).

15. Check for voltage between the No. 1 terminal of SRS unit connector B (28P) and body ground, and between the No. 2 terminal and body ground. There should be 0.5 V or less.

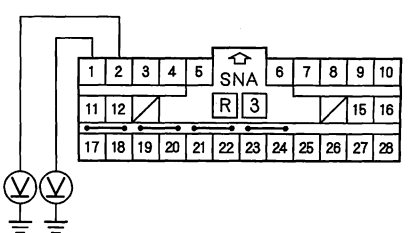


*Is the voltage as specified?*

**YES**—Faulty SRS unit or poor connection at SRS unit connector B (28P) and the SRS unit. Check the connection; if the connection is OK, replace the SRS unit (see page 24-161). ■

**NO**—Short to power in the SRS wire harness; replace the SRS wire harness. ■



BACK

Protected by AR

## DTC 21-91: Short to Ground in Driver's Seat Belt Tensioner

**Special Tools Required**
- SRS inflator simulator 07SAZ-TB4011A
- SRS simulator lead K 070AZ-SNAA200

1. Erase the DTC memory (see page 24-25).

2. Turn the ignition switch ON (II), and check that the SRS indicator comes on for about 6 seconds and then goes off.

   *Does the SRS indicator stay on, and is DTC 21-91 indicated?*

   **YES**—Go to step 3.

   **NO**—Intermittent failure, system is OK at this time. Go to Troubleshooting Intermittent Failures (see page 24-26). If another DTC is indicated, go to the DTC Troubleshooting Index.

3. Turn the ignition switch OFF. Disconnect the negative cable from the battery, and wait for 3 minutes.

4. Disconnect the SRS wire harness 4P connector (A) from the driver's seat belt tensioner.

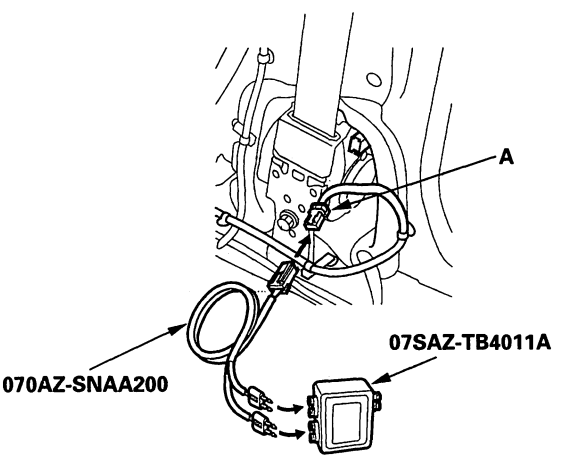


5. Connect the SRS inflator simulator (2 Ω connectors) and simulator lead K to the SRS wire harness.

6. Reconnect the negative cable to the battery.

7. Erase the DTC memory.

8. Read the DTC (see page 24-24).

   *Is DTC 21-91 indicated?*

   **YES**—Go to step 9.

   **NO**—Short to ground in the driver's seat belt tensioner; replace the driver's seat belt (see page 24-4). ■

9. Turn the ignition switch OFF. Disconnect the negative cable from the battery, and wait for 3 minutes.

10. Disconnect both seat belt buckle tensioner 4P connectors (see step 11 on page 24-23) and the front passenger's seat belt tensioner 4P connector (see step 10 on page 24-23).

11. Disconnect SRS unit connector B (28P) from the SRS unit (see step 14 on page 24-23).

12. Disconnect the simulator lead from the SRS wire harness.

13. Check resistance between the No. 1 terminal of SRS unit connector B (28P) and body ground, and between the No. 2 terminal and body ground. There should be an open circuit or at least 1 MΩ.

**SRS UNIT CONNECTOR B (28P)**

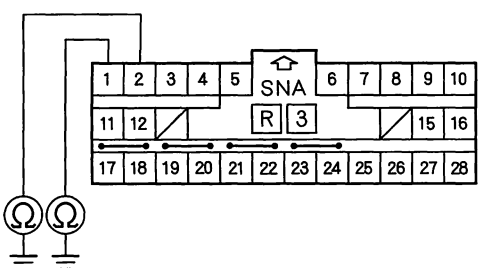


Wire side of female terminals

*Is the resistance as specified?*

**YES**—Faulty SRS unit or poor connection at SRS unit connector B (28P) and the SRS unit. Check the connection; if the connection is OK, replace the SRS unit (see page 24-161). ■

**NO**—Short to ground in the SRS wire harness; replace the SRS wire harness. ■

BACK

Protected by AR



## DTC Troubleshooting (cont'd)

### DTC 22-11: Open in Front Passenger's Seat Belt Tensioner

### DTC 22-21: Increased Resistance in Front Passenger's Seat Belt Tensioner

**Special Tools Required**
- SRS inflator simulator 07SAZ-TB4011A
- SRS simulator lead K 070AZ-SNAA200

1. Erase the DTC memory (see page 24-25).

2. Turn the ignition switch ON (II), and check that the SRS indicator comes on for about 6 seconds and then goes off.

   *Does the SRS indicator stay on, and is DTC 22-11 or 22-21 indicated?*

   **YES**—Go to step 3.

   **NO**—Intermittent failure, system is OK at this time. Go to Troubleshooting Intermittent Failures (see page 24-26). If another DTC is indicated, go to the DTC Troubleshooting Index.

3. Turn the ignition switch OFF. Disconnect the negative cable from the battery, and wait for 3 minutes.

4. Disconnect the SRS wire harness 4P connector (A) from the front passenger's seat belt tensioner.

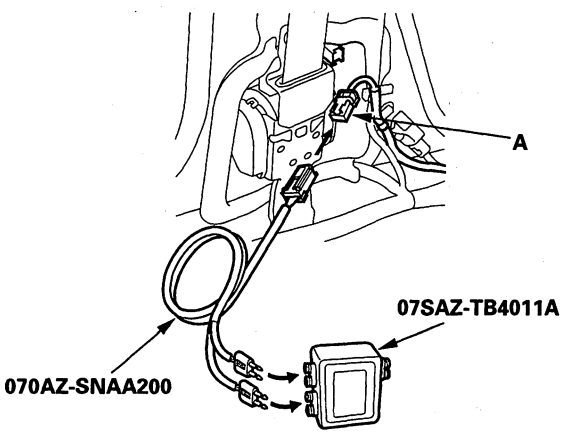


5. Connect the SRS inflator simulator (2 Ω connectors) and simulator lead K to the SRS wire harness.

6. Reconnect the negative cable to the battery.

7. Erase the DTC memory.

8. Read the DTC (see page 24-24).

   *Is DTC 22-11 or 22-21 indicated?*

   **YES**—Go to step 9.

   **NO**—Open or increased resistance in the front passenger's seat belt tensioner; replace the front passenger's seat belt (see page 24-4).■

9. Turn the ignition switch OFF. Disconnect the negative cable from the battery, and wait for 3 minutes.

10. Disconnect both seat belt buckle tensioner 4P connectors (see step 11 on page 24-23) and the driver's seat belt tensioner 4P connector (see step 10 on page 24-23).

11. Disconnect SRS unit connector B (28P) from the SRS unit (see step 14 on page 24-23).

12. Check resistance between the No. 3 and the No. 4 terminals of SRS unit connector B (28P). There should be 2.0—3.0 Ω.

**SRS UNIT CONNECTOR B (28P)**

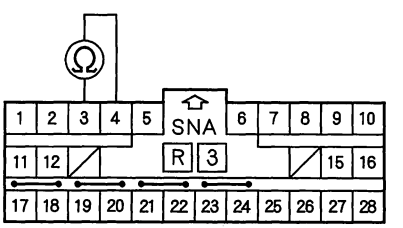


Wire side of female terminals

*Is the resistance as specified?*

**YES**—Faulty SRS unit or poor connection at SRS unit connector B (28P) and the SRS unit. Check the connection; if the connection is OK, replace the SRS unit (see page 24-161).■

**NO**—Open or increased resistance in the SRS wire harness; replace the SRS wire harness.■



BACK

Protected by AR

## DTC 22-31: Short to Another Wire or Decreased Resistance in Front Passenger's Seat Belt Tensioner

**Special Tools Required**
- SRS inflator simulator 07SAZ-TB4011A
- SRS simulator lead K 070AZ-SNAA200

1. Erase the DTC memory (see page 24-25).

2. Turn the ignition switch ON (II), and check that the SRS indicator comes on for about 6 seconds and then goes off.

   *Does the SRS indicator stay on, and is DTC 22-31 indicated?*

   **YES**—Go to step 3.

   **NO**—Intermittent failure, system is OK at this time. Go to Troubleshooting Intermittent Failures (see page 24-26). If another DTC is indicated, go to the DTC Troubleshooting Index.

3. Turn the ignition switch OFF. Disconnect the negative cable from the battery, and wait for 3 minutes.

4. Disconnect the SRS wire harness 4P connector (A) from the front passenger's seat belt tensioner.

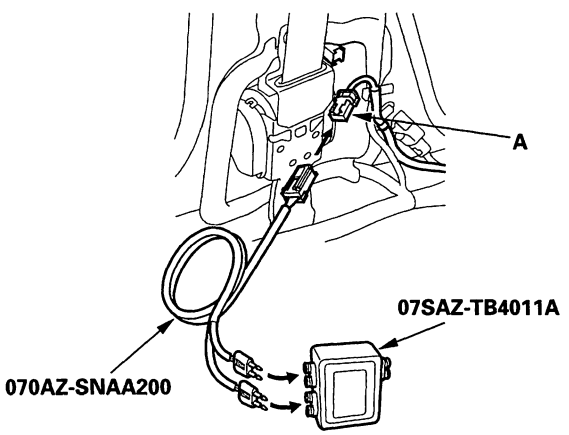


5. Connect the SRS inflator simulator (2 Ω connectors) and simulator lead K to the SRS wire harness.

6. Reconnect the negative cable to the battery.

7. Erase the DTC memory.

8. Read the DTC (see page 24-24).

   *Is DTC 22-31 indicated?*

   **YES**—Go to step 9.

   **NO**—Short in the front passenger's seat belt tensioner; replace the front passenger's seat belt (see page 24-4).■

9. Turn the ignition switch OFF. Disconnect the negative cable from the battery, and wait for 3 minutes.

10. Disconnect both seat belt buckle tensioner 4P connectors (see step 11 on page 24-23) and the driver's seat belt tensioner 4P connector (see step 10 on page 24-23).

11. Disconnect SRS unit connector B (28P) from the SRS unit (see step 14 on page 24-23).

12. Disconnect the simulator lead from the SRS wire harness.

13. Check resistance between the No. 3 and the No. 4 terminals of SRS unit connector B (28P). There should be an open circuit or at least 1 MΩ.

**SRS UNIT CONNECTOR B (28P)**

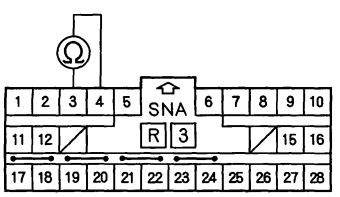


Wire side of female terminals

*Is the resistance as specified?*

**YES**—Faulty SRS unit or poor connection at SRS unit connector B (28P) and the SRS unit. Check the connection; if the connection is OK, replace the SRS unit (see page 24-161).■

**NO**—Short in the SRS wire harness; replace the SRS wire harness.■

BACK

Protected by AR



## DTC Troubleshooting (cont'd)

### DTC 22-81: Short to Power in Front Passenger's Seat Belt Tensioner

**Special Tools Required**
- SRS inflator simulator 07SAZ-TB4011A
- SRS simulator lead K 070AZ-SNAA200

1. Erase the DTC memory (see page 24-25).

2. Turn the ignition switch ON (II), and check that the SRS indicator comes on for about 6 seconds and then goes off.

   *Does the SRS indicator stay on, and is DTC 22-81 indicated?*

   **YES**—Go to step 3.

   **NO**—Intermittent failure, system is OK at this time. Go to Troubleshooting Intermittent Failures (see page 24-26). If another DTC is indicated, go to the DTC Troubleshooting Index.

3. Turn the ignition switch OFF. Disconnect the negative cable from the battery, and wait for 3 minutes.

4. Disconnect the SRS wire harness 4P connector (A) from the front passenger's seat belt tensioner.

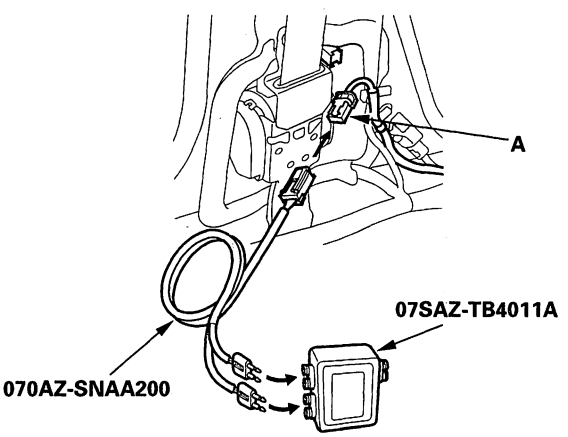


5. Connect the SRS inflator simulator (2 Ω connectors) and simulator lead K to the SRS wire harness.

6. Reconnect the negative cable to the battery.

7. Erase the DTC memory.

8. Read the DTC (see page 24-24).

   *Is DTC 22-81 indicated?*

   **YES**—Go to step 9.

   **NO**—Short to power in the front passenger's seat belt tensioner; replace the front passenger's seat belt (see page 24-4). ■

9. Turn the ignition switch OFF. Disconnect the negative cable from the battery, and wait for 3 minutes.

10. Disconnect both seat belt buckle tensioner 4P connectors (see step 11 on page 24-23) and the driver's seat belt tensioner 4P connector (see step 10 on page 24-23).

11. Disconnect SRS unit connector B (28P) from the SRS unit (see step 14 on page 24-23).

12. Disconnect the simulator lead from the SRS wire harness.

13. Reconnect the negative cable to the battery.

14. Turn the ignition switch ON (II).

15. Check for voltage between the No. 3 terminal of SRS unit connector B (28P) and body ground, and between the No. 4 terminal and body ground. There should be 0.5 V or less.

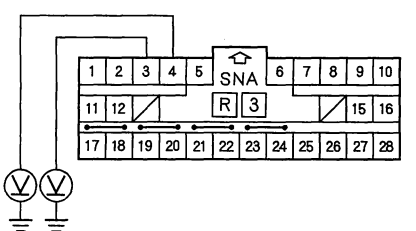


Wire side of female terminals

*Is the voltage as specified?*

**YES**—Faulty SRS unit or poor connection at SRS unit connector B (28P) and the SRS unit. Check the connection; if the connection is OK, replace the SRS unit (see page 24-161). ■

**NO**—Short to power in the SRS wire harness; replace the SRS wire harness. ■

BACK

Protected by AR

## DTC 22-91: Short to Ground in Front Passenger's Seat Belt Tensioner

**Special Tools Required**
- SRS inflator simulator 07SAZ-TB4011A
- SRS simulator lead K 070AZ-SNAA200

1. Erase the DTC memory (see page 24-25).

2. Turn the ignition switch ON (II), and check that the SRS indicator comes on for about 6 seconds and then goes off.

   *Does the SRS indicator stay on, and is DTC 22-91 indicated?*

   **YES**—Go to step 3.

   **NO**—Intermittent failure, system is OK at this time. Go to Troubleshooting Intermittent Failures (see page 24-26). If another DTC is indicated, go to the DTC Troubleshooting Index.

3. Turn the ignition switch OFF. Disconnect the negative cable from the battery, and wait for 3 minutes.

4. Disconnect the SRS wire harness 4P connector (A) from the front passenger's seat belt tensioner.

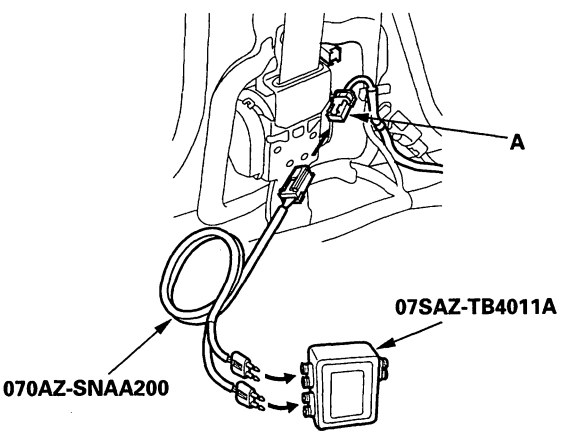


5. Connect the SRS inflator simulator (2 Ω connectors) and simulator lead K to the SRS wire harness.

6. Reconnect the negative cable to the battery.

7. Erase the DTC memory.

8. Read the DTC (see page 24-24).

   *Is DTC 22-91 indicated?*

   **YES**—Go to step 9.

   **NO**—Short to ground in the front passenger's seat belt tensioner; replace the front passenger's seat belt (see page 24-4).■

9. Turn the ignition switch OFF. Disconnect the negative cable from the battery, and wait for 3 minutes.

10. Disconnect both seat belt buckle tensioner 4P connectors (see step 11 on page 24-23) and the driver's seat belt tensioner 4P connector (see step 10 on page 24-23).

11. Disconnect SRS unit connector B (28P) from the SRS unit (see step 14 on page 24-23).

12. Disconnect the simulator lead from the SRS wire harness.

13. Check resistance between the No. 3 terminal of SRS unit connector B (28P) and body ground, and between the No. 4 terminal and body ground. There should be an open circuit or at least 1 MΩ.

**SRS UNIT CONNECTOR B (28P)**

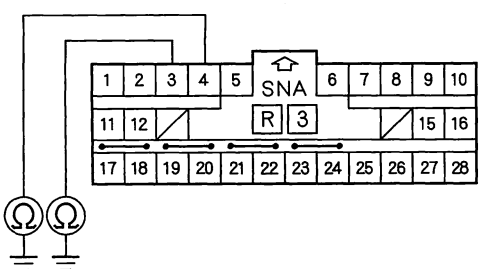


Wire side of female terminals

*Is the resistance as specified?*

**YES**—Faulty SRS unit or poor connection at SRS unit connector B (28P) and the SRS unit. Check the connection; if the connection is OK, replace the SRS unit (see page 24-161).■

**NO**—Short to ground in the SRS wire harness; replace the SRS wire harness.■

BACK

Protected by AR



## DTC Troubleshooting (cont'd)

### DTC 27-11: Open in Driver's Seat Belt Buckle Tensioner

### DTC 27-21: Increased Resistance in Driver's Seat Belt Buckle Tensioner

**Special Tools Required**
- SRS inflator simulator 07SAZ-TB4011A
- SRS simulator lead K 070AZ-SNAA200

1. Erase the DTC memory (see page 24-25).

2. Turn the ignition switch ON (II), and check that the SRS indicator comes on for about 6 seconds and then goes off.

   *Does the SRS indicator stay on, and is DTC 27-11 or 27-21 indicated?*

   **YES**—Go to step 3.

   **NO**—Intermittent failure, system is OK at this time. Go to Troubleshooting Intermittent Failures (see page 24-26). If another DTC is indicated, go to the DTC Troubleshooting Index.

3. Turn the ignition switch OFF. Disconnect the negative cable from the battery, and wait for 3 minutes.

4. Disconnect the SRS wire harness 4P connector (A) from the driver's seat belt buckle tensioner connector (B).

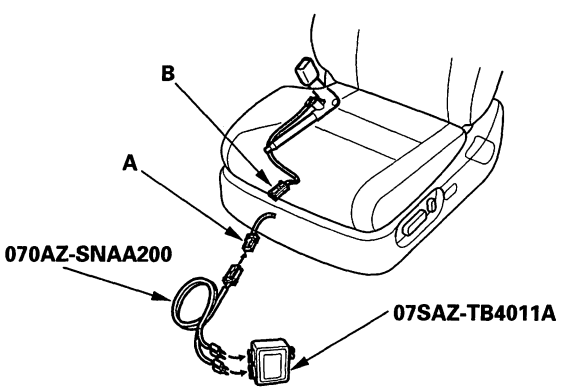


5. Connect the SRS inflator simulator (2 Ω connectors) and simulator lead K to the SRS wire harness connector.

6. Reconnect the negative cable to the battery.

7. Erase the DTC memory.

8. Read the DTC (see page 24-24).

   *Is DTC 27-11 or 27-21 indicated?*

   **YES**—Go to step 9.

   **NO**—Open or increased resistance in the driver's seat belt buckle tensioner; replace the driver's seat belt buckle (see page 24-6).■

9. Turn the ignition switch OFF. Disconnect the negative cable from the battery, and wait for 3 minutes.

10. Disconnect both seat belt tensioner 4P connectors (see step 10 on page 24-23) and the front passenger's seat belt buckle tensioner 4P connector (see step 11 on page 24-23).

11. Disconnect SRS unit connector B (28P) from the SRS unit (see step 14 on page 24-23).

12. Check resistance between the No. 7 and No. 8 terminals of SRS unit connector B (28P). There should be 2.0—3.0 Ω.

**SRS UNIT CONNECTOR B (28P)**

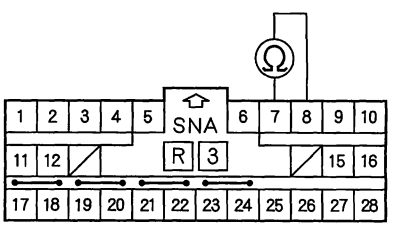


Wire side of female terminals

*Is the resistance as specified?*

**YES**—Faulty SRS unit or poor connection at SRS unit connector B (28P) and the SRS unit. Check the connection; if the connection is OK, replace the SRS unit (see page 24-161).■

**NO**—Open or increased resistance in the SRS wire harness; replace the SRS wire harness.■



BACK

Protected by AR

## DTC 27-31: Short to Another Wire or Decreased Resistance in Driver's Seat Belt Buckle Tensioner

**Special Tools Required**
- SRS inflator simulator 07SAZ-TB4011A
- SRS simulator lead K 070AZ-SNAA200

1. Erase the DTC memory (see page 24-25).

2. Turn the ignition switch ON (II), and check that the SRS indicator comes on for about 6 seconds and then goes off.

   *Does the SRS indicator stay on, and is DTC 27-31 indicated?*

   **YES**—Go to step 3.

   **NO**—Intermittent failure, system is OK at this time. Go to Troubleshooting Intermittent Failures (see page 24-26). If another DTC is indicated, go to the DTC Troubleshooting Index.

3. Turn the ignition switch OFF. Disconnect the negative cable from the battery, and wait for 3 minutes.

4. Disconnect the SRS wire harness 4P connector (A) from the driver's seat belt buckle tensioner connector (B).

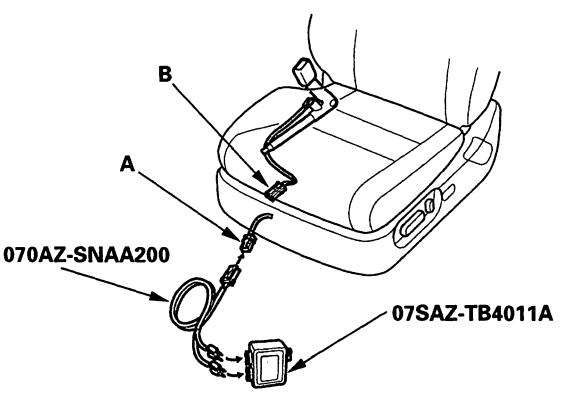


5. Connect the SRS inflator simulator (2 Ω connectors) and simulator lead K to the SRS wire harness connector.

6. Reconnect the negative cable to the battery.

7. Erase the DTC memory.

8. Read the DTC (see page 24-24).

   *Is DTC 27-31 indicated?*

   **YES**—Go to step 9.

   **NO**—Short in the driver's seat belt buckle tensioner; replace the driver's seat belt buckle (see page 24-6). ■

9. Turn the ignition switch OFF. Disconnect the negative cable from the battery, and wait for 3 minutes.

10. Disconnect both seat belt tensioner 4P connectors (see step 10 on page 24-23) and the front passenger's seat belt buckle tensioner 4P connector (see step 11 on page 24-23).

11. Disconnect SRS unit connector B (28P) from the SRS unit (see step 14 on page 24-23).

12. Disconnect the simulator lead from the SRS wire harness.

13. Check resistance between the No. 7 and No. 8 terminals of SRS unit connector B (28P). There should be an open circuit or at least 1 MΩ.

**SRS UNIT CONNECTOR B (28P)**

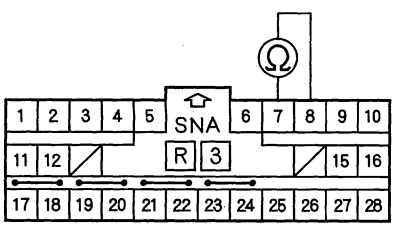


Wire side of female terminals

*Is the resistance as specified?*

**YES**—Faulty SRS unit or poor connection at SRS unit connector B (28P) and the SRS unit. Check the connection; if the connection is OK, replace the SRS unit (see page 24-161). ■

**NO**—Short in the SRS wire harness; replace the SRS wire harness. ■

BACK

Protected by AR



## DTC Troubleshooting (cont'd)

### DTC 27-81: Short to Power in Driver's Seat Belt Buckle Tensioner

**Special Tools Required**
- SRS inflator simulator 07SAZ-TB4011A
- SRS simulator lead K 070AZ-SNAA200

1. Erase the DTC memory (see page 24-25).

2. Turn the ignition switch ON (II), and check that the SRS indicator comes on for about 6 seconds and then goes off.

   *Does the SRS indicator stay on, and is DTC 27-81 indicated?*

   **YES**—Go to step 3.

   **NO**—Intermittent failure, system is OK at this time. Go to Troubleshooting Intermittent Failures (see page 24-26). If another DTC is indicated, go to the DTC Troubleshooting Index.

3. Turn the ignition switch OFF. Disconnect the negative cable from the battery, and wait for 3 minutes.

4. Disconnect the SRS wire harness 4P connector (A) from the driver's seat belt buckle tensioner connector (B).

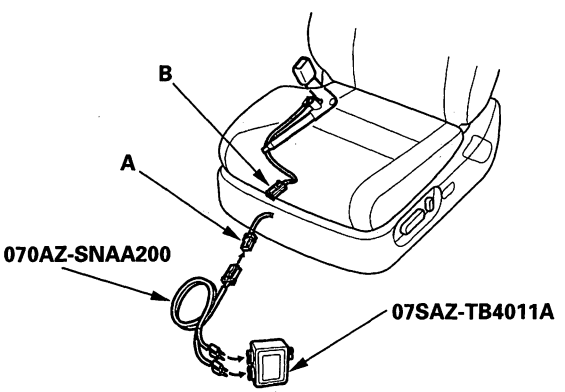


5. Connect the SRS inflator simulator (2 Ω connectors) and simulator lead K to the SRS wire harness connector.

6. Reconnect the negative cable to the battery.

7. Erase the DTC memory.

8. Read the DTC (see page 24-24).

   *Is DTC 27-81 indicated?*

   **YES**—Go to step 9.

   **NO**—Short to power in the driver's seat belt buckle tensioner; replace the driver's seat belt buckle (see page 24-6).■

9. Turn the ignition switch OFF. Disconnect the negative cable from the battery, and wait for 3 minutes.

10. Disconnect both seat belt tensioner 4P connectors (see step 10 on page 24-23) and the front passenger's seat belt buckle tensioner 4P connector (see step 11 on page 24-23).

11. Disconnect SRS unit connector B (28P) from the SRS unit (see step 14 on page 24-23).

12. Disconnect the simulator lead from the SRS wire harness.

13. Reconnect the negative cable to the battery.

14. Turn the ignition switch ON (II).

15. Check for voltage between the No. 7 terminal of SRS unit connector B (28P) and body ground, and the No. 8 terminal and body ground. There should be 0.5 V or less.

**SRS UNIT CONNECTOR B (28P)**

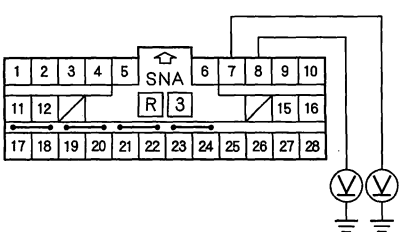


Wire side of female terminals

*Is the voltage as specified?*

**YES**—Faulty SRS unit or poor connection at SRS unit connector B (28P) and the SRS unit. Check the connection; if the connection is OK, replace the SRS unit (see page 24-161).■

**NO**—Short to power in the SRS wire harness; replace the SRS wire harness.■



BACK

Protected by AR

## DTC 27-91: Short to Ground in Driver's Seat Belt Buckle Tensioner

**Special Tools Required**
- SRS inflator simulator 07SAZ-TB4011A
- SRS simulator lead K 070AZ-SNAA200

1. Erase the DTC memory (see page 24-25).

2. Turn the ignition switch ON (II), and check that the SRS indicator comes on for about 6 seconds and then goes off.

   *Does the SRS indicator stay on, and is DTC 27-91 indicated?*

   **YES**—Go to step 3.

   **NO**—Intermittent failure, system is OK at this time. Go to Troubleshooting Intermittent Failures (see page 24-26). If another DTC is indicated, go to the DTC Troubleshooting Index.

3. Turn the ignition switch OFF. Disconnect the negative cable from the battery, and wait for 3 minutes.

4. Disconnect the SRS wire harness 4P connector (A) from the driver's seat belt buckle tensioner connector (B).

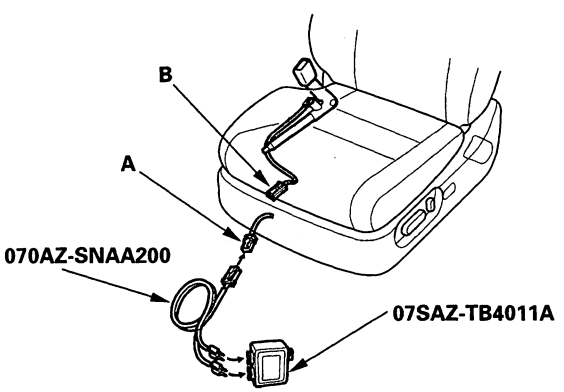


5. Connect the SRS inflator simulator (2 Ω connectors) and simulator lead K to the SRS wire harness connector.

6. Reconnect the negative cable to the battery.

7. Erase the DTC memory.

8. Read the DTC (see page 24-24).

   *Is DTC 27-91 indicated?*

   **YES**—Go to step 9.

   **NO**—Short to ground in the driver's seat belt buckle tensioner; replace the driver's seat belt buckle (see page 24-6). ■

9. Turn the ignition switch OFF. Disconnect the negative cable from the battery, and wait for 3 minutes.

10. Disconnect both seat belt tensioner 4P connectors (see step 10 on page 24-23) and the front passenger's seat belt buckle tensioner 4P connector (see step 11 on page 24-23).

11. Disconnect SRS unit connector B (28P) from the SRS unit (see step 14 on page 24-23).

12. Disconnect the simulator lead from the SRS wire harness.

13. Check resistance between the No. 7 terminal of SRS unit connector B (28P) and body ground, and the No. 8 terminal and body ground. There should be an open circuit or at least 1 MΩ.

**SRS UNIT CONNECTOR B (28P)**

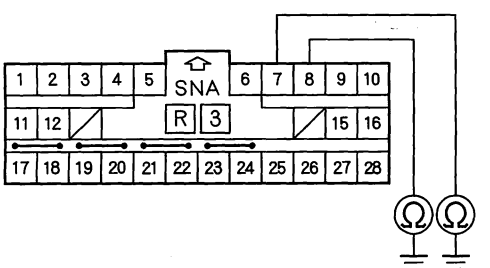


Wire side of female terminals

*Is the resistance as specified?*

**YES**—Faulty SRS unit or poor connection at SRS unit connector B (28P) and the SRS unit. Check the connection; if the connection is OK, replace the SRS unit (see page 24-161). ■

**NO**—Short to ground in the SRS wire harness; replace the SRS wire harness. ■

Protected by AR



## DTC Troubleshooting (cont'd)

### DTC 28-11: Open in Front Passenger's Seat Belt Buckle Tensioner

### DTC 28-21: Increased Resistance in Front Passenger's Seat Belt Buckle Tensioner

**Special Tools Required**
- SRS inflator simulator 07SAZ-TB4011A
- SRS simulator lead K 070AZ-SNAA200

1. Erase the DTC memory (see page 24-25).

2. Turn the ignition switch ON (II), and check that the SRS indicator comes on for about 6 seconds and then goes off.

   *Does the SRS indicator stay on, and is DTC 28-11 or 28-21 indicated?*

   **YES**—Go to step 3.

   **NO**—Intermittent failure, system is OK at this time. Go to Troubleshooting Intermittent Failures (see page 24-26). If another DTC is indicated, go to the DTC Troubleshooting Index.

3. Turn the ignition switch OFF. Disconnect the negative cable from the battery, and wait for 3 minutes.

4. Disconnect the SRS wire harness 4P connector (A) from the front passenger's seat belt buckle tensioner connector (B).

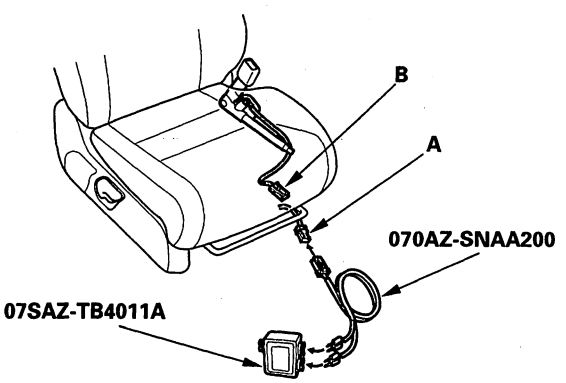


5. Connect the SRS inflator simulator (2 Ω connectors) and simulator lead K to the SRS wire harness connector.

6. Reconnect the negative cable to the battery.

7. Erase the DTC memory.

8. Read the DTC (see page 24-24).

   *Is DTC 28-11 or 28-21 indicated?*

   **YES**—Go to step 9.

   **NO**—Open or increased resistance in the front passenger's seat belt buckle tensioner; replace the front passenger's seat belt buckle (see page 24-6). ■

9. Turn the ignition switch OFF. Disconnect the negative cable from the battery, and wait for 3 minutes.

10. Disconnect both seat belt tensioner 4P connectors (see step 10 on page 24-23) and the driver's seat belt buckle tensioner 4P connector (see step 11 on page 24-23).

11. Disconnect SRS unit connector B (28P) from the SRS unit (see step 14 on page 24-23).

12. Check resistance between the No. 9 and No.10 terminals of SRS unit connector B (28P). There should be 2.0—3.0 Ω.

**SRS UNIT CONNECTOR B (28P)**

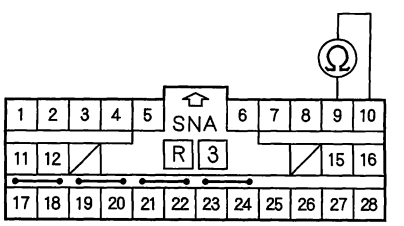


Wire side of female terminals

*Is the resistance as specified?*

**YES**—Faulty SRS unit or poor connection at SRS unit connector B (28P) and the SRS unit. Check the connection; if the connection is OK, replace the SRS unit (see page 24-161). ■

**NO**—Open or increased resistance in the SRS wire harness; replace the SRS wire harness. ■



BACK

Protected by AR

## DTC 28-31: Short to Another Wire or Decreased Resistance in Front Passenger's Seat Belt Buckle Tensioner

**Special Tools Required**
- SRS inflator simulator 07SAZ-TB4011A
- SRS simulator lead K 070AZ-SNAA200

1. Erase the DTC memory (see page 24-25).

2. Turn the ignition switch ON (II), and check that the SRS indicator comes on for about 6 seconds and then goes off.

   *Does the SRS indicator stay on, and is DTC 28-31 indicated?*

   **YES**—Go to step 3.

   **NO**—Intermittent failure, system is OK at this time. Go to Troubleshooting Intermittent Failures (see page 24-26). If another DTC is indicated, go to the DTC Troubleshooting Index.

3. Turn the ignition switch OFF. Disconnect the negative cable from the battery, and wait for 3 minutes.

4. Disconnect the SRS wire harness 4P connector (A) from the front passenger's seat belt buckle tensioner connector (B).

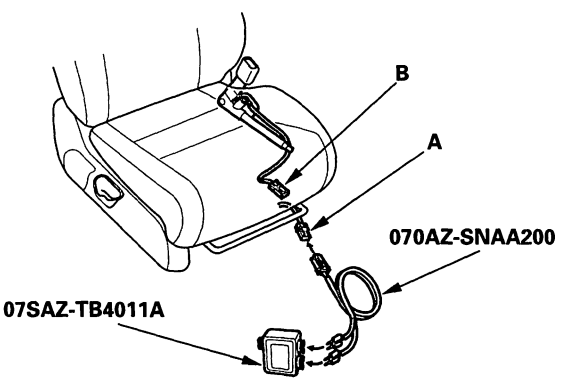


5. Connect the SRS inflator simulator (2 Ω connectors) and simulator lead K to SRS wire harness connector.

6. Reconnect the negative cable to the battery.

7. Erase the DTC memory.

8. Read the DTC (see page 24-24).

   *Is DTC 28-31 indicated?*

   **YES**—Go to step 9.

   **NO**—Short in the front passenger's seat belt buckle tensioner; replace the front passenger's seat belt buckle (see page 24-6).■

9. Turn the ignition switch OFF. Disconnect the negative cable from the battery, and wait for 3 minutes.

10. Disconnect both seat belt tensioner 4P connectors (see step 10 on page 24-23) and the driver's seat belt buckle tensioner 4P connector (see step 11 on page 24-23).

11. Disconnect SRS unit connector B (28P) from the SRS unit (see step 14 on page 24-23).

12. Disconnect the simulator lead from the SRS wire harness.

13. Check resistance between the No. 9 and No. 10 terminals of SRS unit connector B (28P). There should be an open circuit or at least 1 MΩ.

**SRS UNIT CONNECTOR B (28P)**

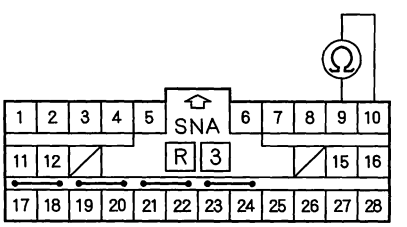


Wire side of female terminals

*Is the resistance as specified?*

**YES**—Faulty SRS unit or poor connection at SRS unit connector B (28P) and the SRS unit. Check the connection; if the connection is OK, replace the SRS unit (see page 24-161).■

**NO**—Short in the SRS wire harness; replace the SRS wire harness.■

Protected by AR



## DTC Troubleshooting (cont'd)

### DTC 28-81: Short to Power in Front Passenger's Seat Belt Buckle Tensioner

**Special Tools Required**
- SRS inflator simulator 07SAZ-TB4011A
- SRS simulator lead K 070AZ-SNAA200

1. Erase the DTC memory (see page 24-25).

2. Turn the ignition switch ON (II), and check that the SRS indicator comes on for about 6 seconds and then goes off.

   *Does the SRS indicator stay on, and is DTC 28-81 indicated?*

   **YES**—Go to step 3.

   **NO**—Intermittent failure, system is OK at this time. Go to Troubleshooting Intermittent Failures (see page 24-26). If another DTC is indicated, go to the DTC Troubleshooting Index.

3. Turn the ignition switch OFF. Disconnect the negative cable from the battery, and wait for 3 minutes.

4. Disconnect the SRS wire harness 4P connector (A) from the front passenger's seat belt buckle tensioner connector (B).

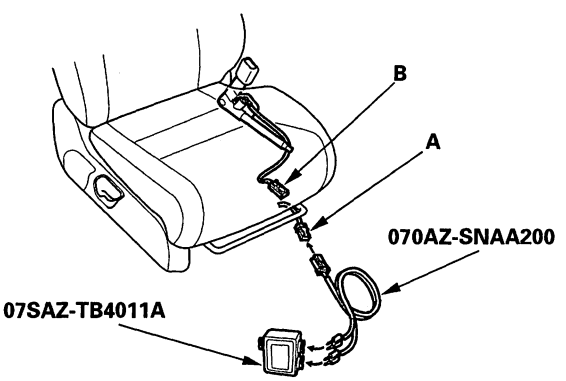


5. Connect the SRS inflator simulator (2 Ω connectors) and simulator lead K to SRS wire harness connector.

6. Reconnect the negative cable to the battery.

7. Erase the DTC memory.

8. Read the DTC (see page 24-24).

   *Is DTC 28-81 indicated?*

   **YES**—Go to step 9.

   **NO**—Short to power in the front passenger's seat belt buckle tensioner; replace the front passenger's seat belt buckle (see page 24-6).■

9. Turn the ignition switch OFF. Disconnect the negative cable from the battery, and wait for 3 minutes.

10. Disconnect both seat belt tensioner 4P connectors (see step 10 on page 24-23) and the driver's seat belt buckle tensioner 4P connector (see step 11 on page 24-23).

11. Disconnect SRS unit connector B (28P) from the SRS unit (see step 14 on page 24-23).

12. Disconnect the simulator lead from the SRS wire harness.

13. Reconnect the negative cable to the battery.

14. Turn the ignition switch ON (II).

15. Check for voltage between the No. 9 terminal of SRS unit connector B (28P) and body ground, and the No. 10 terminal and body ground. There should be 0.5 V or less.

**SRS UNIT CONNECTOR B (28P)**

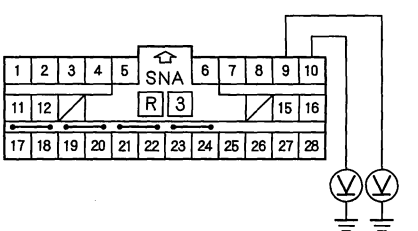


Wire side of female terminals

*Is the voltage as specified?*

**YES**—Faulty SRS unit or poor connection at SRS unit connector B (28P) and the SRS unit. Check the connection; if the connection is OK, replace the SRS unit (see page 24-161).■

**NO**—Short to power in the SRS wire harness; replace the SRS wire harness.■



BACK

Protected by AR

## **DTC 28-91:** Short to Ground in Front Passenger's Seat Belt Buckle Tensioner

**Special Tools Required**
- SRS inflator simulator 07SAZ-TB4011A
- SRS simulator lead K 070AZ-SNAA200

1. Erase the DTC memory (see page 24-25).

2. Turn the ignition switch ON (II), and check that the SRS indicator comes on for about 6 seconds and then goes off.

   *Does the SRS indicator stay on, and is DTC 28-91 indicated?*

   **YES**—Go to step 3.

   **NO**—Intermittent failure, system is OK at this time. Go to Troubleshooting Intermittent Failures (see page 24-26). If another DTC is indicated, go to the DTC Troubleshooting Index.

3. Turn the ignition switch OFF. Disconnect the negative cable from the battery, and wait for 3 minutes.

4. Disconnect the SRS wire harness 4P connector (A) from the front passenger's seat belt buckle tensioner connector (B).

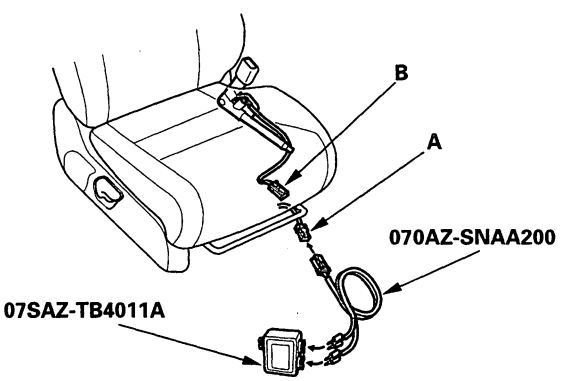


5. Connect the SRS inflator simulator (2 Ω connectors) and simulator lead K to SRS wire harness connector.

6. Reconnect the negative cable to the battery.

7. Erase the DTC memory.

8. Read the DTC (see page 24-24).

   *Is DTC 28-91 indicated?*

   **YES**—Go to step 9.

   **NO**—Short to ground in the front passenger's seat belt buckle tensioner; replace the front passenger's seat belt buckle (see page 24-6).■

9. Turn the ignition switch OFF. Disconnect the negative cable from the battery, and wait for 3 minutes.

10. Disconnect both seat belt tensioner 4P connectors (see step 10 on page 24-23) and the driver's seat belt buckle tensioner 4P connector (see step 11 on page 24-23).

11. Disconnect SRS unit connector B (28P) from the SRS unit (see step 14 on page 24-23).

12. Disconnect the simulator lead from the SRS wire harness.

13. Check resistance between the No. 9 terminal of SRS unit connector B (28P) and body ground, and the No. 10 terminal and body ground. There should be an open circuit or at least 1 MΩ.

**SRS UNIT CONNECTOR B (28P)**

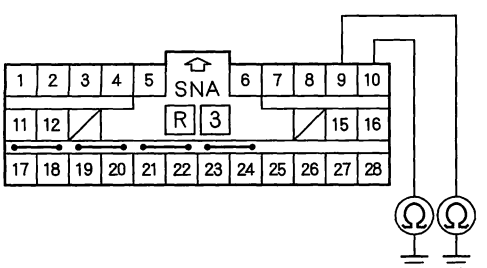


Wire side of female terminals

*Is the resistance as specified?*

**YES**—Faulty SRS unit or poor connection at SRS unit connector B (28P) and the SRS unit. Check the connection; if the connection is OK, replace the SRS unit (see page 24-161).■

**NO**—Short to ground in the SRS wire harness; replace the SRS wire harness.■

Protected by AR



## DTC Troubleshooting (cont'd)

### DTC 31-11: Open in Driver's Side Airbag Inflator

### DTC 31-21: Increased Resistance in Driver's Side Airbag Inflator

**Special Tools Required**
- SRS inflator simulator 07SAZ-TB4011A
- SRS simulator lead L 070AZ-SNAA300

1. Erase the DTC memory (see page 24-25).

2. Turn the ignition switch ON (II), and check that the SRS indicator comes on for about 6 seconds and then goes off.

   *Does the SRS indicator stay on, and is DTC 31-11 or 31-21 indicated?*

   **YES**—Go to step 3.

   **NO**—Intermittent failure, system is OK at this time. Go to Troubleshooting Intermittent Failures (see page 24-26). If another DTC is indicated, go to the DTC Troubleshooting Index.

3. Turn the ignition switch OFF. Disconnect the negative cable from the battery, and wait for 3 minutes.

4. Disconnect the SRS wire harness 2P connector (A) from the driver's side airbag (B).

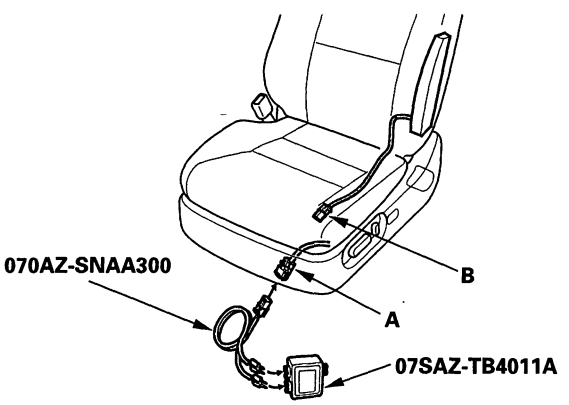


5. Connect the SRS inflator simulator (2 connectors) and simulator lead L to the SRS wire harness.

6. Reconnect the negative cable to the battery.

7. Erase the DTC memory.

8. Read the DTC (see page 24-24).

   *Is DTC 31-11 indicated?*

   **YES**—Go to step 9.

   **NO**—Open or increased resistance in the driver's side airbag inflator; replace the driver's side airbag (see page 24-4).■

9. Turn the ignition switch OFF. Disconnect the negative cable from the battery, and wait for 3 minutes.

10. Disconnect both seat belt tensioner 4P connectors (see step 10 on page 24-23) and both seat belt buckle tensioner 4P connectors (see step 11 on page 24-23).

11. Disconnect SRS unit connector B (28P) from the SRS unit (see step 14 on page 24-23).

12. Disconnect the SRS inflator simulator from SRS simulator lead. Do not disconnect the simulator lead from the SRS wire harness 2P connector.

13. Check resistance between the terminals of the black SRS simulator lead (A). There should be 1.0 Ω or less.

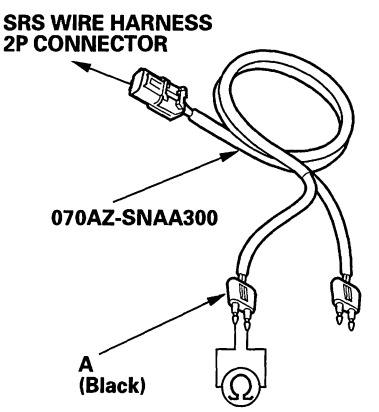


   *Is the resistance as specified?*

   **YES**—Faulty SRS unit or poor connection at SRS unit connector B (28P) and the SRS unit. Check the connection; if the connection is OK, replace the SRS unit (see page 24-161).■

   **NO**—Open or increased resistance in the SRS wire harness; replace the SRS wire harness.■



BACK

Protected by AR

## DTC 31-31: Short to Another Wire or Decreased Resistance in Driver's Side Airbag Inflator

**Special Tools Required**
- SRS inflator simulator 07SAZ-TB4011A
- SRS simulator lead L 070AZ-SNAA300
- SRS short canceller 070AZ-SAA0100

1. Erase the DTC memory (see page 24-25).

2. Turn the ignition switch ON (II), and check that the SRS indicator comes on for about 6 seconds and then goes off.

   *Does the SRS indicator stay on, and is DTC 31-31 indicated?*

   **YES**—Go to step 3.

   **NO**—Intermittent failure, system is OK at this time. Go to Troubleshooting Intermittent Failures (see page 24-26). If another DTC is indicated, go to the DTC Troubleshooting Index.

3. Turn the ignition switch OFF. Disconnect the negative cable from the battery, and wait for 3 minutes.

4. Disconnect the SRS wire harness 2P connector (A) from the driver's side airbag (B).

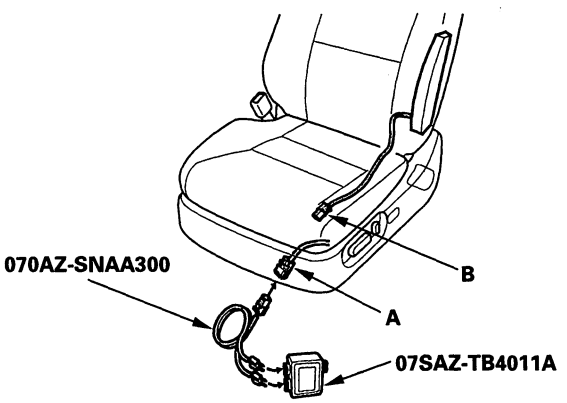


5. Connect the SRS inflator simulator (2 Ω connectors) and simulator lead L to the SRS wire harness.

6. Reconnect the negative cable to the battery.

7. Erase the DTC memory.

8. Read the DTC (see page 24-24).

   *Is DTC 31-31 indicated?*

   **YES**—Go to step 9.

   **NO**—Short to another wire in the driver's side airbag inflator; replace the driver's side airbag (see page 24-149). ■

9. Turn the ignition switch OFF. Disconnect the negative cable from the battery, and wait for 3 minutes.

10. Disconnect both seat belt tensioner 4P connectors (see step 10 on page 24-23) and both seat belt buckle tensioner 4P connectors (see step 11 on page 24-23).

11. Disconnect SRS unit connector B (28P) from the SRS unit (see step 14 on page 24-23).

12. Disconnect the SRS inflator simulator from the SRS simulator lead. Do not disconnect the simulator lead from the SRS wire harness 2P connector.

13. Connect the SRS short canceller (070AZ-SAA0100) to the No. 17 and No. 18 terminals of SRS unit connector B (28P) (see page 24-19).

14. Check resistance between the terminals of the black SRS simulator lead (A). There should be an open circuit or at least 1 MΩ.

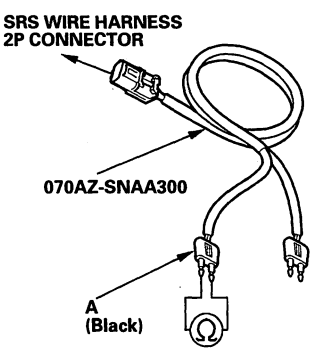


   *Is the resistance as specified?*

   **YES**—Faulty SRS unit or poor connection at SRS unit connector B (28P) and the SRS unit. Check the connection; if the connection is OK, replace the SRS unit (see page 24-161). ■

   **NO**—Short in the SRS wire harness; replace the SRS wire harness. ■

Protected by AR



## DTC Troubleshooting (cont'd)

### DTC 31-81: Short to Power in Driver's Side Airbag Inflator

**Special Tools Required**
- SRS inflator simulator 07SAZ-TB4011A
- SRS simulator lead L 070AZ-SNAA300

1. Erase the DTC memory (see page 24-25).

2. Turn the ignition switch ON (II), and check that the SRS indicator comes on for about 6 seconds and then goes off.

   *Does the SRS indicator stay on, and is DTC 31-81 indicated?*

   **YES**—Go to step 3.

   **NO**—Intermittent failure, system is OK at this time. Go to Troubleshooting Intermittent Failures (see page 24-26). If another DTC is indicated, go to the DTC Troubleshooting Index.

3. Turn the ignition switch OFF. Disconnect the negative cable from the battery, and wait for 3 minutes.

4. Disconnect the SRS wire harness 2P connector (A) from the driver's side airbag (B).

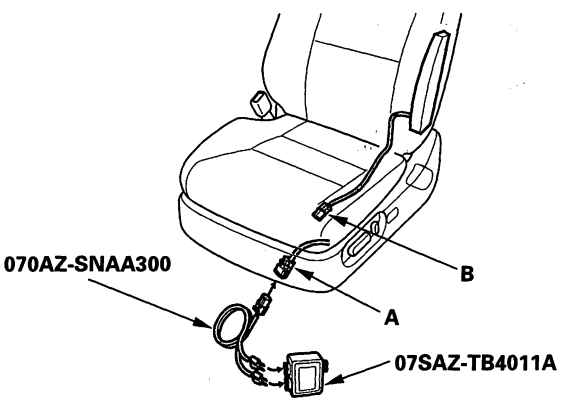


5. Connect the SRS inflator simulator (2 Ω connectors) and simulator lead L to the SRS wire harness.

6. Reconnect the negative cable to the battery.

7. Erase the DTC memory.

8. Read the DTC (see page 24-24).

   *Is DTC 31-81 indicated?*

   **YES**—Go to step 9.

   **NO**—Short to power in the driver's side airbag inflator; replace the driver's side airbag (see page 24-149). ■

9. Turn the ignition switch OFF. Disconnect the negative cable from the battery, and wait for 3 minutes.

10. Disconnect both seat belt tensioner 4P connectors (see step 10 on page 24-23) and both seat belt buckle tensioner 4P connectors (see step 11 on page 24-23).

11. Disconnect SRS unit connector B (28P) from the SRS unit (see step 14 on page 24-23).

12. Disconnect the SRS inflator simulator from the SRS simulator lead. Do not disconnect the simulator lead from the SRS wire harness 2P connector.

13. Reconnect the negative cable to the battery.

14. Turn the ignition switch ON (II).

15. Check for voltage between each terminal of the black SRS simulator lead (A) and body ground. There should be 0.5 V or less.

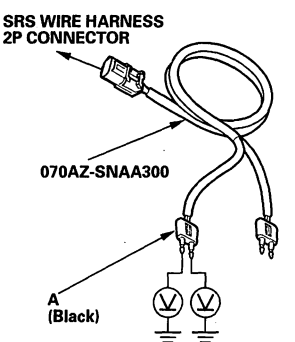


   *Is the voltage as specified?*

   **YES**—Faulty SRS unit or poor connection at SRS unit connector B (28P) and the SRS unit. Check the connection; if the connection is OK, replace the SRS unit (see page 24-161). ■

   **NO**—Short to power in the SRS wire harness; replace the SRS wire harness. ■



BACK

Protected by AR

## **DTC 31-91:** Short to Ground in Driver's Side Airbag Inflator

**Special Tools Required**
- SRS inflator simulator 07SAZ-TB4011A
- SRS simulator lead L 070AZ-SNAA300

1. Erase the DTC memory (see page 24-25).

2. Turn the ignition switch ON (II), and check that the SRS indicator comes on for about 6 seconds and then goes off.

   *Does the SRS indicator stay on, and is DTC 31-91 indicated?*

   **YES**—Go to step 3.

   **NO**—Intermittent failure, system is OK at this time. Go to Troubleshooting Intermittent Failures (see page 24-26). If another DTC is indicated, go to the DTC Troubleshooting Index.

3. Turn the ignition switch OFF. Disconnect the negative cable from the battery, and wait for 3 minutes.

4. Disconnect the SRS wire harness 2P connector (A) from the driver's side airbag (B).

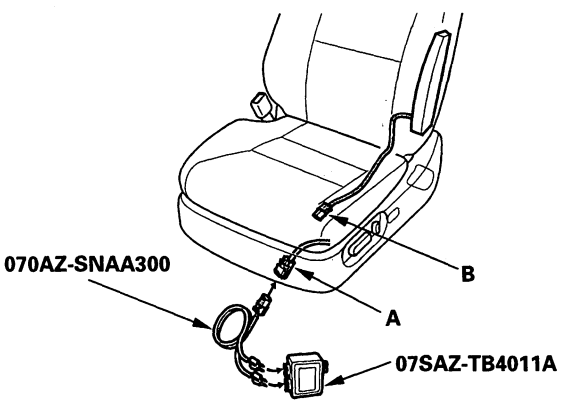


5. Connect the SRS inflator simulator (2 Ω connectors) and simulator lead L to the SRS wire harness.

6. Reconnect the negative cable to the battery.

7. Erase the DTC memory.

8. Read the DTC (see page 24-24).

   *Is DTC 31-91 indicated?*

   **YES**—Go to step 9.

   **NO**—Short to ground in the driver's side airbag inflator; replace the driver's side airbag (see page 24-149).■

9. Turn the ignition switch OFF. Disconnect the negative cable from the battery, and wait for 3 minutes.

10. Disconnect both seat belt tensioner 4P connectors (see step 10 on page 24-23) and both seat belt buckle tensioner 4P connectors (see step 11 on page 24-23).

11. Disconnect SRS unit connector B (28P) from the SRS unit (see step 14 on page 24-23).

12. Disconnect the SRS inflator simulator from the SRS simulator lead. Do not disconnect the simulator lead from the SRS wire harness 2P connector.

13. Check resistance between each terminal of the black SRS simulator lead (A) and body ground. There should be an open circuit or at least 1 MΩ.

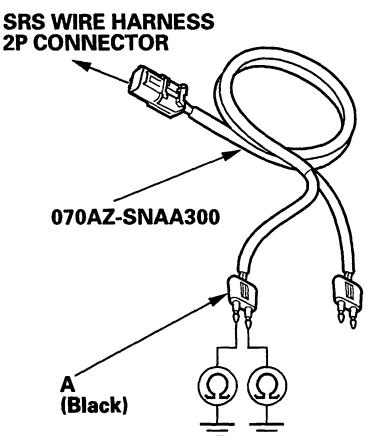


   *Is the resistance as specified?*

   **YES**—Faulty SRS unit or poor connection at SRS unit connector B (28P) and the SRS unit. Check the connection; if the connection is OK, replace the SRS unit (see page 24-161).■

   **NO**—Short to ground in the SRS wire harness; replace the SRS wire harness.■

Protected by AR



## DTC Troubleshooting (cont'd)

### DTC 32-11: Open in Front Passenger's Side Airbag Inflator

### DTC 32-21: Increased Resistance in Front Passenger's Side Airbag Inflator

**Special Tools Required**
- SRS inflator simulator 07SAZ-TB4011A
- SRS simulator lead L 070AZ-SNAA300

1. Erase the DTC memory (see page 24-25).

2. Turn the ignition switch ON (II), and check that the SRS indicator comes on for about 6 seconds and then goes off.

   *Does the SRS indicator stay on, and is DTC 32-11 or 32-21 indicated?*

   **YES**—Go to step 3.

   **NO**—Intermittent failure, system is OK at this time. Go to Troubleshooting Intermittent Failures (see page 24-26). If another DTC is indicated, go to the DTC Troubleshooting Index.

3. Turn the ignition switch OFF. Disconnect the negative cable from the battery, and wait for 3 minutes.

4. Disconnect the SRS wire harness 2P connector (A) from the front passenger's side airbag (B).

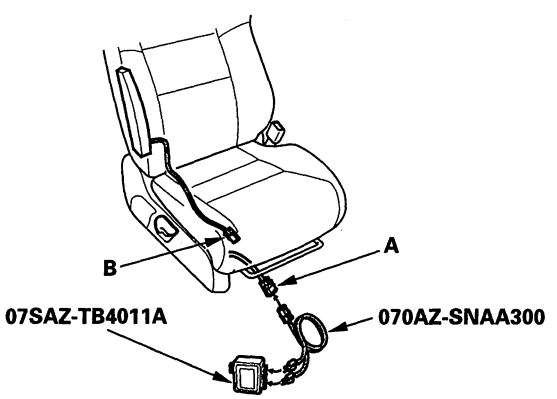


5. Connect the SRS inflator simulator (2 Ω connectors) and simulator lead L to the SRS wire harness.

6. Reconnect the negative cable to the battery.

7. Erase the DTC memory.

8. Read the DTC (see page 24-24).

   *Is DTC 32-11 or 32-21 indicated?*

   **YES**—Go to step 9.

   **NO**—Open or increased resistance in the front passenger's side airbag inflator; replace the front passenger's side airbag (see page 24-149).■

9. Turn the ignition switch OFF. Disconnect the negative cable from the battery, and wait for 3 minutes.

10. Disconnect both seat belt tensioner 4P connectors (see step 10 on page 24-23) and both seat belt buckle tensioner 4P connectors (see step 11 on page 24-23).

11. Disconnect SRS unit connector B (28P) from the SRS unit (see step 14 on page 24-23).

12. Disconnect the SRS inflator simulator from the SRS simulator lead. Do not disconnect the simulator lead from the SRS wire harness 2P connector.

13. Check resistance between the terminals of the black SRS simulator lead (A). There should be 1.0 Ω or less.

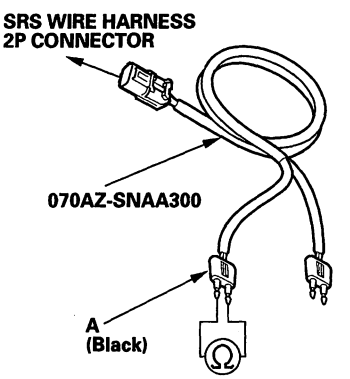


*Is the resistance as specified?*

**YES**—Faulty SRS unit or poor connection at SRS unit connector B (28P) and the SRS unit. Check the connection; if the connection is OK, replace the SRS unit (see page 24-161).■

**NO**—Open or increased resistance in the SRS wire harness; replace the SRS wire harness.■



BACK

Protected by AR

## **DTC 32-31:** Short to Another Wire or Decreased Resistance in Front Passenger's Side Airbag Inflator

**Special Tools Required**
- SRS inflator simulator 07SAZ-TB4011A
- SRS simulator lead L 070AZ-SNAA300
- SRS short canceller 070AZ-SAA0100

1. Erase the DTC memory (see page 24-25).

2. Turn the ignition switch ON (II), and check that the SRS indicator comes on for about 6 seconds and then goes off.

   *Does the SRS indicator stay on, and is DTC 32-31 indicated?*

   **YES**—Go to step 3.

   **NO**—Intermittent failure, system is OK at this time. Go to Troubleshooting Intermittent Failures (see page 24-26). If another DTC is indicated, go to the DTC Troubleshooting Index.

3. Turn the ignition switch OFF. Disconnect the negative cable from the battery, and wait for 3 minutes.

4. Disconnect the SRS wire harness 2P connector (A) from the front passenger's side airbag (B).

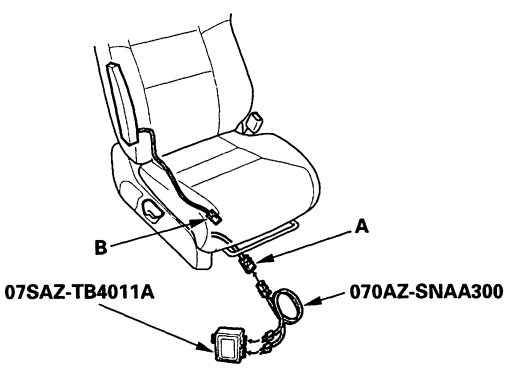


5. Connect the SRS inflator simulator (2 Ω connectors) and simulator lead L to the SRS wire harness.

6. Reconnect the negative cable to the battery.

7. Erase the DTC memory.

8. Read the DTC (see page 24-24).

   *Is DTC 32-31 indicated?*

   **YES**—Go to step 9.

   **NO**—Short to another wire in the front passenger's side airbag inflator; replace the front passenger's side airbag (see page 24-149). ■

9. Turn the ignition switch OFF. Disconnect the negative cable from the battery, and wait for 3 minutes.

10. Disconnect both seat belt tensioner 4P connectors (see step 10 on page 24-23) and both seat belt buckle tensioner 4P connectors (see step 11 on page 24-23).

11. Disconnect SRS unit connector B (28P) from the SRS unit (see step 14 on page 24-23).

12. Disconnect the SRS inflator simulator from the SRS simulator lead. Do not disconnect the simulator lead from the SRS wire harness 2P connector.

13. Connect the SRS short canceller (070AZ-SAA0100) to the No. 19 and No. 20 terminals of SRS unit connector B (28P) (see page 24-19).

14. Check resistance between the terminals of the black SRS simulator lead (A). There should be an open circuit or at least 1 MΩ.

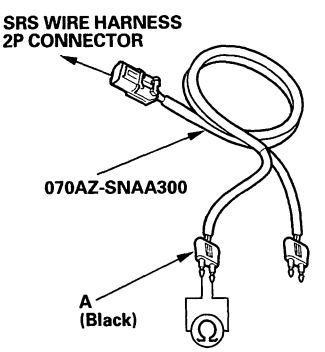


   *Is the resistance as specified?*

   **YES**—Faulty SRS unit or poor connection at SRS unit connector B (28P) and the SRS unit. Check the connection; if the connection is OK, replace the SRS unit (see page 24-161). ■

   **NO**—Short in the SRS wire harness; replace the SRS wire harness. ■

BACK

Protected by AR



## DTC Troubleshooting (cont'd)

### DTC 32-81: Short to Power in Front Passenger's Side Airbag Inflator

**Special Tools Required**
- SRS inflator simulator 07SAZ-TB4011A
- SRS simulator lead L 070AZ-SNAA300

1. Erase the DTC memory (see page 24-25).

2. Turn the ignition switch ON (II), and check that the SRS indicator comes on for about 6 seconds and then goes off.

   *Does the SRS indicator stay on, and is DTC 32-81 indicated?*

   **YES**—Go to step 3.
   **NO**—Intermittent failure, system is OK at this time. Go to Troubleshooting Intermittent Failures (see page 24-26). If another DTC is indicated, go to the DTC Troubleshooting Index.

3. Turn the ignition switch OFF. Disconnect the negative cable from the battery, and wait for 3 minutes.

4. Disconnect the SRS wire harness 2P connector (A) from the front passenger's side airbag (B).

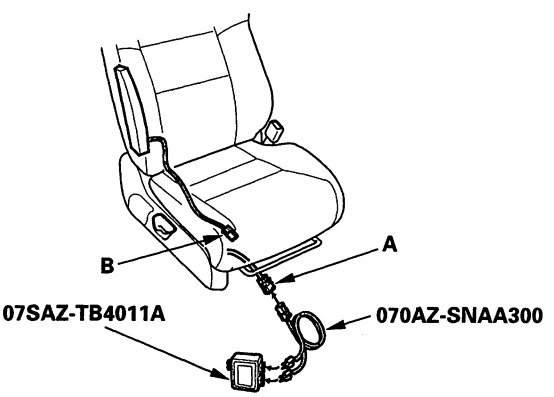


5. Connect the SRS inflator simulator (2 Ω connectors) and simulator lead L to the SRS wire harness.

6. Reconnect the negative cable to the battery.

7. Erase the DTC memory.

8. Read the DTC (see page 24-24).

   *Is DTC 32-81 indicated?*

   **YES**—Go to step 9.
   **NO**—Short to power in the front passenger's side airbag inflator; replace the front passenger's side airbag (see page 24-149).■

9. Turn the ignition switch OFF. Disconnect the negative cable from the battery, and wait for 3 minutes.

10. Disconnect both seat belt tensioner 4P connectors (see step 10 on page 24-23) and both seat belt buckle tensioner 4P connectors (see step 11 on page 24-23).

11. Disconnect SRS unit connector B (28P) from the SRS unit (see step 14 on page 24-23).

12. Disconnect the SRS inflator simulator from the SRS simulator lead. Do not disconnect the simulator lead from the SRS wire harness 2P connector.

13. Reconnect the negative cable to the battery.

14. Turn the ignition switch ON (II).

15. Check for voltage between each terminal of the black SRS simulator lead (A) and body ground. There should be 0.5 V or less.

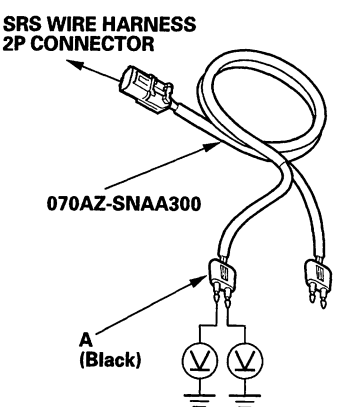


   *Is the voltage as specified?*

   **YES**—Faulty SRS unit or poor connection at SRS unit connector B (28P) and the SRS unit. Check the connection; if the connection is OK, replace the SRS unit (see page 24-161).■
   **NO**—Short to power in the SRS wire harness; replace the SRS wire harness.■



BACK

Protected by AR

## **DTC 32-91:** Short to Ground in Front Passenger's Side Airbag Inflator

**Special Tools Required**
- SRS inflator simulator 07SAZ-TB4011A
- SRS simulator lead L 070AZ-SNAA300

1. Erase the DTC memory (see page 24-25).

2. Turn the ignition switch ON (II), and check that the SRS indicator comes on for about 6 seconds and then goes off.

   *Does the SRS indicator stay on, and is DTC 32-91 indicated?*

   **YES**—Go to step 3.

   **NO**—Intermittent failure, system is OK at this time. Go to Troubleshooting Intermittent Failures (see page 24-26). If another DTC is indicated, go to the DTC Troubleshooting Index.

3. Turn the ignition switch OFF. Disconnect the negative cable from the battery, and wait for 3 minutes.

4. Disconnect the SRS wire harness 2P connector (A) from the front passenger's side airbag (B).

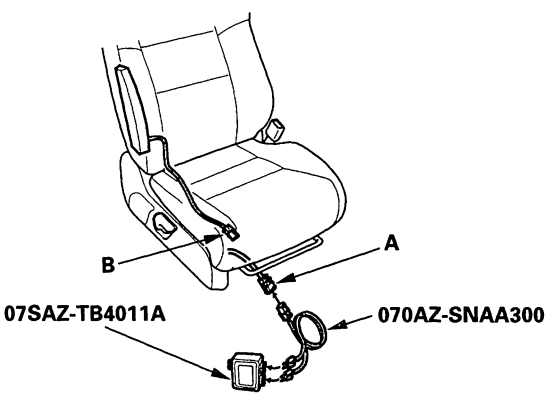


5. Connect the SRS inflator simulator (2 Ω connectors) and simulator lead L to the SRS wire harness.

6. Reconnect the negative cable to the battery.

7. Erase the DTC memory.

8. Read the DTC (see page 24-24).

   *Is DTC 32-91 indicated?*

   **YES**—Go to step 9.

   **NO**—Short to ground in the front passenger's side airbag inflator; replace the front passenger's side airbag (see page 24-149).■

9. Turn the ignition switch OFF. Disconnect the negative cable from the battery, and wait for 3 minutes.

10. Disconnect both seat belt tensioner 4P connectors (see step 10 on page 24-23) and both seat belt buckle tensioner 4P connectors (see step 11 on page 24-23).

11. Disconnect SRS unit connector B (28P) from the SRS unit (see step 14 on page 24-23).

12. Disconnect the SRS inflator simulator from the SRS simulator lead. Do not disconnect the simulator lead from the SRS wire harness 2P connector.

13. Check resistance between each terminal of the black SRS simulator lead (A) and body ground. There should be an open circuit or at least 1 MΩ.

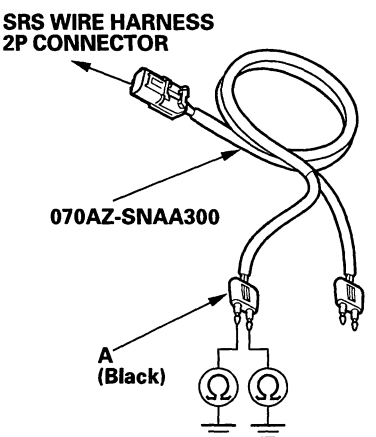


   *Is the resistance as specified?*

   **YES**—Faulty SRS unit or poor connection at SRS unit connector B (28P) and the SRS unit. Check the connection; if the connection is OK, replace the SRS unit (see page 24-161).■

   **NO**—Short to ground in the SRS wire harness; replace the SRS wire harness.■

Protected by AR



## DTC Troubleshooting (cont'd)

### DTC 33-11: Open in Left Side Curtain Airbag Inflator

### DTC 33-21: Increased Resistance in Left Side Curtain Airbag Inflator

**Special Tools Required**
- SRS inflator simulator 07SAZ-TB4011A
- SRS simulator lead L 070AZ-SNAA300

1. Erase the DTC memory (see page 24-25).

2. Turn the ignition switch ON (II), and check that the SRS indicator comes on for about 6 seconds and then goes off.

   *Does the SRS indicator stay on, and is DTC 33-11 or 33-21 indicated?*

   **YES**—Go to step 3.

   **NO**—Intermittent failure, system is OK at this time. Go to Troubleshooting Intermittent Failures (see page 24-26). If another DTC is indicated, go to the DTC Troubleshooting Index.

3. Turn the ignition switch OFF. Disconnect the negative cable from the battery, and wait for 3 minutes.

4. Remove the left side quarter pillar trim (see page 20-75), then disconnect the SRS wire harness 2P connector (A) from the left side curtain airbag connector (B).

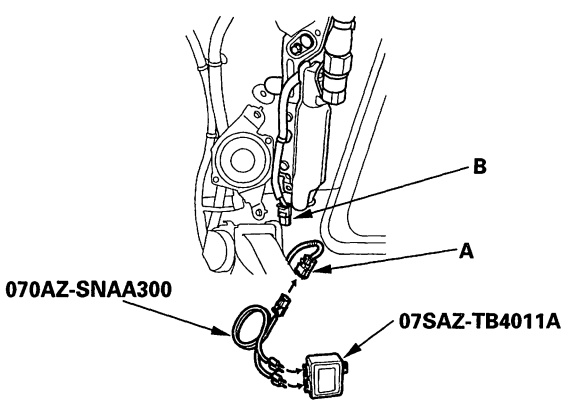


5. Connect the SRS inflator simulator (2 Ω connectors) and simulator lead L to the SRS wire harness.

6. Reconnect the negative cable to the battery.

7. Erase the DTC memory.

8. Read the DTC (see page 24-24).

   *Is DTC 33-11 or 33-21 indicated?*

   **YES**—Go to step 9.

   **NO**—Open or increased resistance in the left side curtain airbag; replace the left side curtain airbag (see page 24-150).■

9. Turn the ignition switch OFF. Disconnect the negative cable from the battery, and wait for 3 minutes.

10. Disconnect both seat belt tensioner 4P connectors (see step 10 on page 24-23) and both seat belt buckle tensioner 4P connectors (see step 11 on page 24-23).

11. Disconnect SRS unit connector B (28P) from the SRS unit (see step 14 on page 24-23).

12. Disconnect the SRS inflator simulator from the SRS simulator lead. Do not disconnect the simulator lead from the SRS wire harness 2P connector.

13. Check resistance between the terminals of the black SRS simulator lead (A). There should be 1.0 Ω or less.

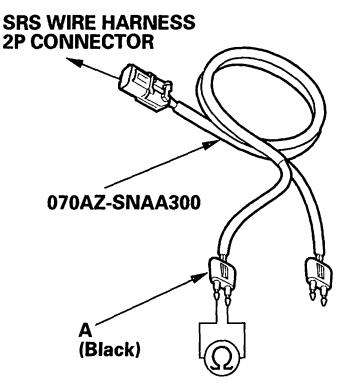


   *Is the resistance as specified?*

   **YES**—Faulty SRS unit or poor connection at the SRS unit connector B (28P) and the SRS unit. Check the connection; if the connection is OK, replace the SRS unit (see page 24-161).■

   **NO**—Open or increased resistance in the SRS wire harness; replace the SRS wire harness.■



BACK

Protected by AR

## **DTC 33-31:** Short to Another Wire or Decreased Resistance in Left Side Curtain Airbag Inflator

**Special Tools Required**
- SRS inflator simulator 07SAZ-TB4011A
- SRS simulator lead L 070AZ-SNAA300
- SRS short canceller 070AZ-SAA0100

1. Erase the DTC memory (see page 24-25).

2. Turn the ignition switch ON (II), and check that the SRS indicator comes on for about 6 seconds and then goes off.

   *Does the SRS indicator stay on, and is DTC 33-31 indicated?*

   **YES**—Go to step 3.
   **NO**—Intermittent failure, system is OK at this time. Go to Troubleshooting Intermittent Failures (see page 24-26). If another DTC is indicated, go to the DTC Troubleshooting Index.

3. Turn the ignition switch OFF. Disconnect the negative cable from the battery, and wait for 3 minutes.

4. Remove the left side quarter pillar trim (see page 20-75), then disconnect the SRS wire harness 2P connector (A) from the left side curtain airbag connector (B).

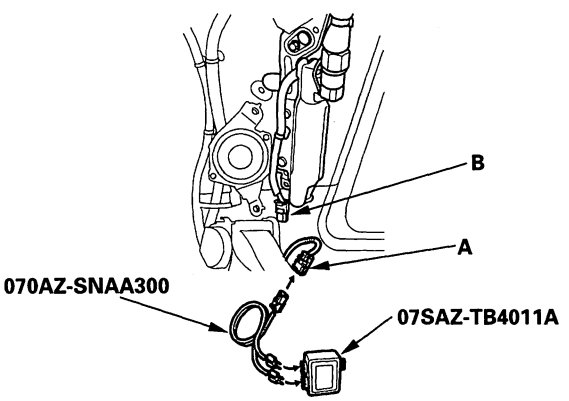


5. Connect the SRS inflator simulator (2 Ω connectors) and simulator lead L to the SRS wire harness.

6. Reconnect the negative cable to the battery.

7. Erase the DTC memory.

8. Read the DTC (see page 24-24).

   *Is DTC 33-31 indicated?*

   **YES**—Go to step 9.
   **NO**—Short to another wire in the left side curtain airbag inflator; replace the left side curtain airbag (see page 24-150).■

9. Turn the ignition switch OFF. Disconnect the negative cable from the battery, and wait for 3 minutes.

10. Disconnect both seat belt tensioner 4P connectors (see step 10 on page 24-23) and both seat belt buckle tensioner 4P connectors (see step 11 on page 24-23).

11. Disconnect SRS unit connector B (28P) from the SRS unit (see step 14 on page 24-23).

12. Disconnect the SRS inflator simulator from the SRS simulator lead. Do not disconnect the simulator lead from the SRS wire harness 2P connector.

13. Connect the SRS short canceller (070AZ-SAA0100) to the No. 21 and No. 22 terminals of SRS unit connector B (28P) (see page 24-19).

14. Check resistance between the terminals of the black SRS simulator lead (A). There should be an open circuit or at least 1 MΩ.

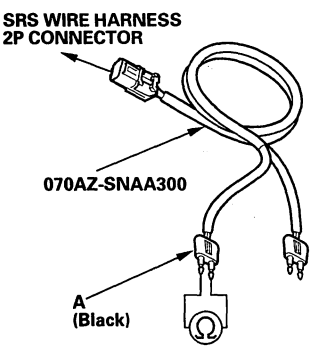


   *Is the resistance as specified?*

   **YES**—Faulty SRS unit or poor connection at SRS unit connector B (28P) and the SRS unit. Check the connection; if the connection is OK, replace the SRS unit (see page 24-161).■
   **NO**—Short to another wire in the SRS wire harness; replace the SRS wire harness.■

Protected by AR



## DTC Troubleshooting (cont'd)

### DTC 33-81: Short to Power in Left Side Curtain Airbag Inflator

**Special Tools Required**
- SRS inflator simulator 07SAZ-TB4011A
- SRS simulator lead L 070AZ-SNAA300

1. Erase the DTC memory (see page 24-25).

2. Turn the ignition switch ON (II), and check that the SRS indicator comes on for about 6 seconds and then goes off.

   *Does the SRS indicator stay on, and is DTC 33-81 indicated?*

   **YES**—Go to step 3.
   **NO**—Intermittent failure, system is OK at this time. Go to Troubleshooting Intermittent Failures (see page 24-26). If another DTC is indicated, go to the DTC Troubleshooting Index.

3. Turn the ignition switch OFF. Disconnect the negative cable from the battery, and wait for 3 minutes.

4. Remove the left side quarter pillar trim (see page 20-75), then disconnect the SRS wire harness 2P connector (A) from the left side curtain airbag connector (B).

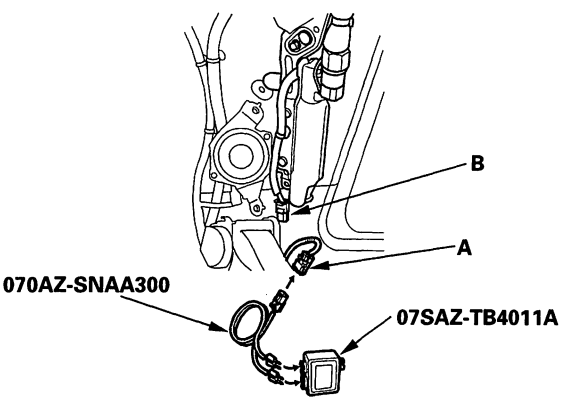


5. Connect the SRS inflator simulator (2 Ω connectors) and simulator lead L to the SRS wire harness.

6. Reconnect the negative cable to the battery.

7. Erase the DTC memory.

8. Read the DTC (see page 24-24).

   *Is DTC 33-81 indicated?*

   **YES**—Go to step 9.
   **NO**—Short to power in the left side curtain airbag inflator; replace the left side curtain airbag (see page 24-150).■

9. Turn the ignition switch OFF. Disconnect the negative cable from the battery, and wait for 3 minutes.

10. Disconnect both seat belt tensioner 4P connectors (see step 10 on page 24-23) and both seat belt buckle tensioner 4P connectors (see step 11 on page 24-23).

11. Disconnect the SRS unit connector B (28P) from the SRS unit (see step 14 on page 24-23).

12. Disconnect the SRS inflator simulator from the SRS simulator lead. Do not disconnect the simulator lead from the SRS wire harness 2P connector.

13. Reconnect the negative cable to the battery.

14. Turn the ignition switch ON (II).

15. Check for voltage between each terminal of the black SRS simulator lead (A) and body ground. There should be 0.5 V or less.

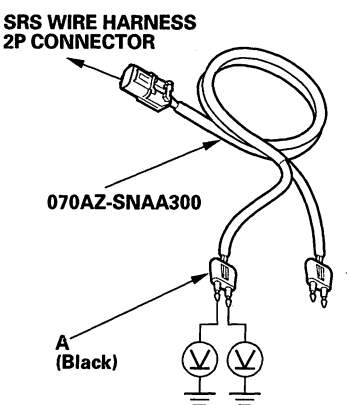


   *Is the voltage as specified?*

   **YES**—Faulty SRS unit or poor connection at SRS unit connector B (28P) and the SRS unit. Check the connection; if the connection is OK, replace the SRS unit (see page 24-161).■
   **NO**—Short to power in the SRS wire harness; replace the SRS wire harness.■



BACK

Protected by AR

## **DTC 33-91:** Short to Ground in Left Side Curtain Airbag Inflator

**Special Tools Required**
- SRS inflator simulator 07SAZ-TB4011A
- SRS simulator lead L 070AZ-SNAA300

1. Erase the DTC memory (see page 24-25).

2. Turn the ignition switch ON (II), and check that the SRS indicator comes on for about 6 seconds and then goes off.

   *Does the SRS indicator stay on, and is DTC 33-91 indicated?*

   **YES**—Go to step 3.

   **NO**—Intermittent failure, system is OK at this time. Go to Troubleshooting Intermittent Failures (see page 24-26). If another DTC is indicated, go to the DTC Troubleshooting Index.

3. Turn the ignition switch OFF. Disconnect the negative cable from the battery, and wait for 3 minutes.

4. Remove the left side quarter pillar trim (see page 20-75), then disconnect the SRS wire harness 2P connector (A) from the left side curtain airbag connector (B).

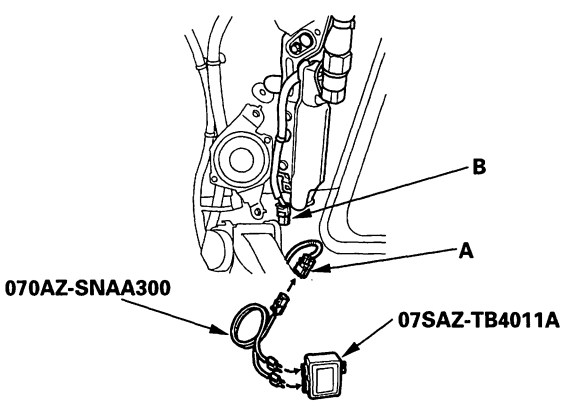


5. Connect the SRS inflator simulator (2 Ω connectors) and simulator lead L to the SRS wire harness.

6. Reconnect the negative cable to the battery.

7. Erase the DTC memory.

8. Read the DTC (see page 24-24).

   *Is DTC 33-91 indicated?*

   **YES**—Go to step 9.

   **NO**—Short to ground in the left side curtain airbag inflator; replace the left side curtain airbag (see page 24-150).■

9. Turn the ignition switch OFF. Disconnect the negative cable from the battery, and wait for 3 minutes.

10. Disconnect both seat belt tensioner 4P connectors (see step 10 on page 24-23) and both seat belt buckle tensioner 4P connectors (see step 11 on page 24-23).

11. Disconnect SRS unit connector B (28P) from the SRS unit (see step 14 on page 24-23).

12. Disconnect the SRS inflator simulator from the SRS simulator lead. Do not disconnect the simulator lead from the SRS wire harness 2P connector.

13. Check resistance between each terminal of the black SRS simulator lead (A) and body ground. There should be an open circuit or at least 1 MΩ.

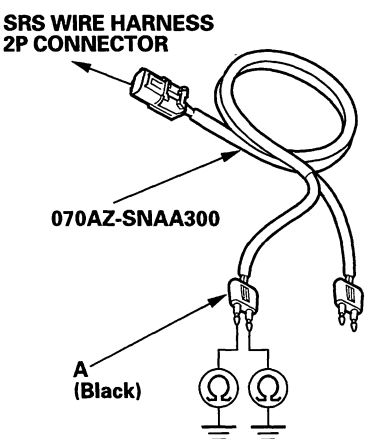


   *Is the resistance as specified?*

   **YES**—Faulty SRS unit or poor connection at SRS unit connector B (28P) and the SRS unit. Check the connection; if the connection is OK, replace the SRS unit (see page 24-161).■

   **NO**—Short to ground in the SRS wire harness; replace the SRS wire harness.■

BACK

Protected by AR



## DTC Troubleshooting (cont'd)

**DTC 34-11:** Open in Right Side Curtain Airbag Inflator

**DTC 34-21:** Increased Resistance in Right Side Curtain Airbag Inflator

**Special Tools Required**
- SRS inflator simulator 07SAZ-TB4011A
- SRS simulator lead L 070AZ-SNAA300

1. Erase the DTC memory (see page 24-25).

2. Turn the ignition switch ON (II), and check that the SRS indicator comes on for about 6 seconds and then goes off.

   *Does the SRS indicator stay on, and is DTC 34-11 or 34-21 indicated?*

   **YES**—Go to step 3.
   **NO**—Intermittent failure, system is OK at this time. Go to Troubleshooting Intermittent Failures (see page 24-26). If another DTC is indicated, go to the DTC Troubleshooting Index.

3. Turn the ignition switch OFF. Disconnect the negative cable from the battery, and wait for 3 minutes.

4. Remove the right side quarter pillar trim (see page 20-75), then disconnect the SRS wire harness 2P connector (A) from the right side curtain airbag connector (B).

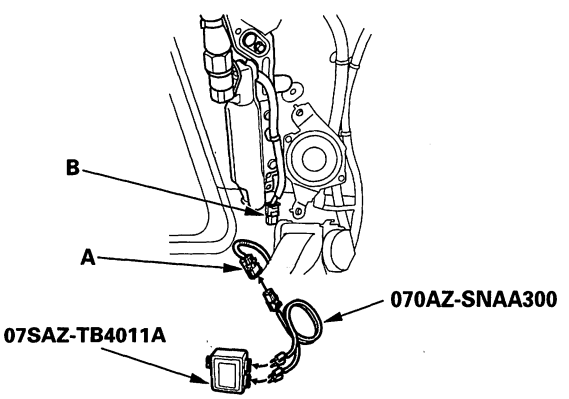


5. Connect the SRS inflator simulator (2 Ω connectors) and simulator lead L to the SRS wire harness.

6. Reconnect the negative cable to the battery.

7. Erase the DTC memory.

8. Read the DTC (see page 24-24).

   *Is DTC 34-11 or 34-21 indicated?*

   **YES**—Go to step 9.
   **NO**—Open or increased resistance in the right side curtain airbag inflator, replace the right side curtain airbag (see page 24-150).■

9. Turn the ignition switch OFF. Disconnect the negative cable from the battery, and wait for 3 minutes.

10. Disconnect both seat belt tensioner 4P connectors (see step 10 on page 24-23) and both seat belt buckle tensioner 4P connectors (see step 11 on page 24-23).

11. Disconnect SRS unit connector B (28P) from the SRS unit (see step 14 on page 24-23).

12. Disconnect the SRS inflator simulator from the SRS simulator lead. Do not disconnect the simulator lead from the SRS wire harness 2P connector.

13. Check resistance between the terminals of the black SRS simulator lead (A). There should be 1.0 Ω or less.

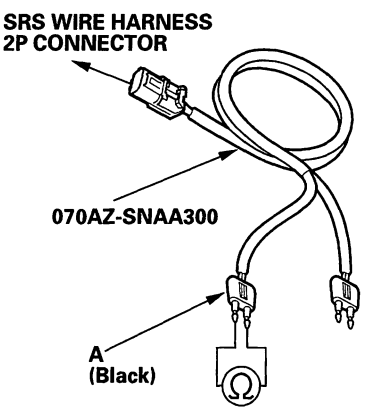


   *Is the resistance as specified?*

   **YES**—Faulty SRS unit or poor connection at SRS unit connector B (28P) and the SRS unit. Check the connection; if the connection is OK, replace the SRS unit (see page 24-161).■
   **NO**—Open or increased resistance in the SRS wire harness; replace the SRS wire harness.■

BACK

Protected by AR

## **DTC 34-31:** Short to Another Wire or Decreased Resistance in Right Side Curtain Airbag Inflator

**Special Tools Required**
- SRS inflator simulator 07SAZ-TB4011A
- SRS simulator lead L 070AZ-SNAA300
- SRS short canceller 070AZ-SAA0100

1. Erase the DTC memory (see page 24-25).

2. Turn the ignition switch ON (II), and check that the SRS indicator comes on for about 6 seconds and then goes off.

   *Does the SRS indicator stay on, and is DTC 34-31 indicated?*

   **YES**—Go to step 3.
   **NO**—Intermittent failure, system is OK at this time. Go to Troubleshooting Intermittent Failures (see page 24-26). If another DTC is indicated, go to the DTC Troubleshooting Index.

3. Turn the ignition switch OFF. Disconnect the negative cable from the battery, and wait for 3 minutes.

4. Remove the right side quarter pillar trim (see page 20-75), then disconnect the SRS wire harness 2P connector (A) from the right side curtain airbag connector (B).

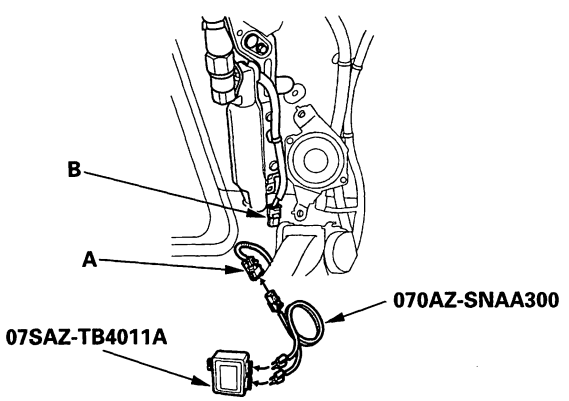


5. Connect the SRS inflator simulator (2 Ω connectors) and simulator lead L to the SRS wire harness.

6. Reconnect the negative cable to the battery.

7. Erase the DTC memory.

8. Read the DTC (see page 24-24).

   *Is DTC 34-31 indicated?*

   **YES**—Go to step 9.
   **NO**—Short to another wire in the right side curtain airbag inflator; replace the right side curtain airbag (see page 24-150).■

9. Turn the ignition switch OFF. Disconnect the negative cable from the battery, and wait for 3 minutes.

10. Disconnect both seat belt tensioner 4P connectors (see step 10 on page 24-23) and both seat belt buckle tensioner 4P connectors (see step 11 on page 24-23).

11. Disconnect SRS unit connector B (28P) from the SRS unit (see step 14 on page 24-23).

12. Disconnect the SRS inflator simulator from the SRS simulator lead. Do not disconnect the simulator lead from the SRS wire harness 2P connector.

13. Connect the SRS short canceller (070AZ-SAA0100) to the No. 23 and No. 24 terminals of SRS unit connector B (28P) (see page 24-19).

14. Check resistance between the terminals of the black SRS simulator lead (A). There should be an open circuit or at least 1 MΩ.

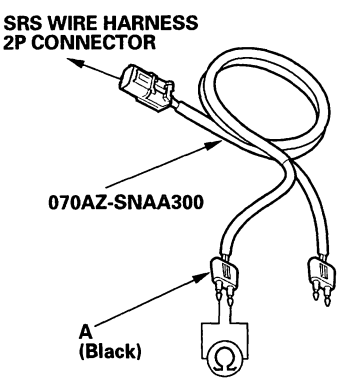


   *Is the resistance as specified?*

   **YES**—Faulty SRS unit or poor connection at SRS unit connector B (28P) and the SRS unit. Check the connection; if the connection is OK, replace the SRS unit (see page 24-161).■
   **NO**—Short in the SRS wire harness; replace the SRS wire harness.■

BACK

Protected by AR



## DTC Troubleshooting (cont'd)

### DTC 34-81: Short to Power in Right Side Curtain Airbag Inflator

**Special Tools Required**
- SRS inflator simulator 07SAZ-TB4011A
- SRS simulator lead L 070AZ-SNAA300

1. Erase the DTC memory (see page 24-25).

2. Turn the ignition switch ON (II), and check that the SRS indicator comes on for about 6 seconds and then goes off.

   *Does the SRS indicator stay on, and is DTC 34-81 indicated?*

   **YES**—Go to step 3.
   **NO**—Intermittent failure, system is OK at this time. Go to Troubleshooting Intermittent Failures (see page 24-26). If another DTC is indicated, go to the DTC Troubleshooting Index.

3. Turn the ignition switch OFF. Disconnect the negative cable from the battery, and wait for 3 minutes.

4. Remove the right side quarter pillar trim (see page 20-75), then disconnect the SRS wire harness 2P connector (A) from the right side curtain airbag connector (B).

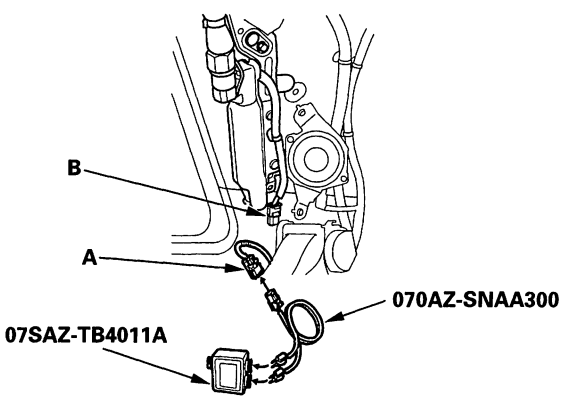


5. Connect the SRS inflator simulator (2 Ω connectors) and simulator lead L to the SRS wire harness.

6. Reconnect the negative cable to the battery.

7. Erase the DTC memory.

8. Read the DTC (see page 24-24).

   *Is DTC 34-81 indicated?*

   **YES**—Go to step 9.
   **NO**—Short to power in the right side curtain airbag inflator; replace the right side curtain airbag (see page 24-150). ■

9. Turn the ignition switch OFF. Disconnect the negative cable from the battery, and wait for 3 minutes.

10. Disconnect both seat belt tensioner 4P connectors (see step 10 on page 24-23) and both seat belt buckle tensioner 4P connecotors (see step 11 on page 24-23).

11. Disconnect SRS unit connector B (28P) from the SRS unit (see step 14 on page 24-23).

12. Disconnect the SRS inflator simulator from the SRS simulator lead. Do not disconnect the simulator lead from the SRS wire harness 2P connector.

13. Reconnect the negative cable to the battery.

14. Turn the ignition switch ON (II).

15. Check for voltage between each terminal of the black SRS simulator lead (A) and body ground. There should be 0.5 V or less.

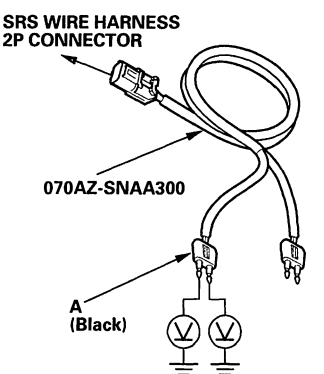


   *Is the voltage as specified?*

   **YES**—Faulty SRS unit or poor connection at SRS unit connector B (28P) and the SRS unit. Check the connection; if the connection is OK, replace the SRS unit (see page 24-161). ■
   **NO**—Short to power in the SRS wire harness; replace the SRS wire harness. ■



BACK

Protected by AR

## DTC 34-91: Short to Ground in Right Side Curtain Airbag Inflator

**Special Tools Required**
- SRS inflator simulator 07SAZ-TB4011A
- SRS simulator lead L 070AZ-SNAA300

1. Erase the DTC memory (see page 24-25).

2. Turn the ignition switch ON (II), and check that the SRS indicator comes on for about 6 seconds and then goes off.

   *Does the SRS indicator stay on, and is DTC 34-91 indicated?*

   **YES**—Go to step 3.

   **NO**—Intermittent failure, system is OK at this time. Go to Troubleshooting Intermittent Failures (see page 24-26). If another DTC is indicated, go to the DTC Troubleshooting Index.

3. Turn the ignition switch OFF. Disconnect the negative cable from the battery, and wait for 3 minutes.

4. Remove the right side quarter pillar trim (see page 20-75), then disconnect the SRS wire harness 2P connector (A) from the right side curtain airbag connector (B).

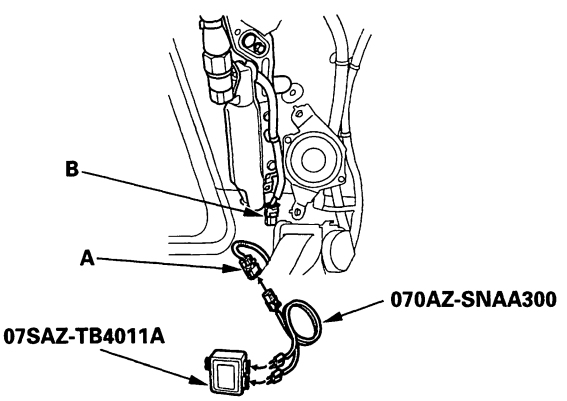


5. Connect the SRS inflator simulator (2 Ω connectors) and simulator lead L to the SRS wire harness.

6. Reconnect the negative cable to the battery.

7. Erase the DTC memory.

8. Read the DTC (see page 24-24).

   *Is DTC 34-91 indicated?*

   **YES**—Go to step 9.

   **NO**—Short to ground in the right side curtain airbag inflator; replace the right side curtain airbag (see page 24-150).■

9. Turn the ignition switch OFF. Disconnect the negative cable from the battery, and wait for 3 minutes.

10. Disconnect both seat belt tensioner 4P connectors (see step 10 on page 24-23) and both seat belt buckle tensioner 4P connectors (see step 11 on page 24-23).

11. Disconnect SRS unit connector B (28P) from the SRS unit (see step 14 on page 24-23).

12. Disconnect the SRS inflator simulator from the SRS simulator lead. Do not disconnect the simulator lead from the SRS wire harness 2P connector.

13. Check resistance between each terminal of the black SRS simulator lead (A) and body ground. There should be an open circuit or at least 1 MΩ.

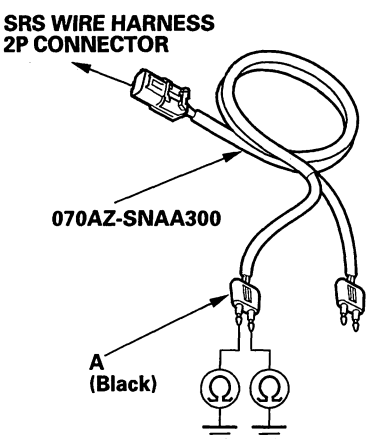


   *Is the resistance as specified?*

   **YES**—Faulty SRS unit or poor connection at SRS unit connector B (28P) and the SRS unit. Check the connection; if the connection is OK, replace the SRS unit (see page 24-161).■

   **NO**—Short to ground in the SRS wire harness; replace the SRS wire harness.■

BACK

Protected by AR



## DTC Troubleshooting (cont'd)

### DTC 41-11: No signal from the Left Front Impact Sensor

**Special Tools Required**
- SRS inflator simulator 07SAZ-TB4011A
- SRS simulator lead L 070AZ-SNAA300

1. Erase the DTC memory (see page 24-25).

2. Turn the ignition switch ON (II), and check that the SRS indicator comes on for about 6 seconds and then goes off.

   *Does the SRS indicator stay on, and is DTC 41-11 indicated?*

   **YES**—Go to step 3.

   **NO**—Intermittent failure, system is OK at this time. Go to Troubleshooting Intermittent Failures (see page 24-26). If another DTC is indicated, go to the DTC Troubleshooting Index.

3. Turn the ignition switch OFF.

4. Disconnect the negative cable from the battery, and wait for 3 minutes.

5. Check the connections between SRS unit connector A (28P) and the SRS unit, between the engine compartment wire harness 2P connector and the left front impact sensor (see page 24-12), and at connector C205 (see page 22-22).

   *Are the connections OK?*

   **YES**—Go to step 6.

   **NO**—Repair the poor connections and retest. If DTC 41-11 is still present, go to step 6.

6. Disconnect the engine compartment wire harness 2P connector (A) from the left front impact sensor.

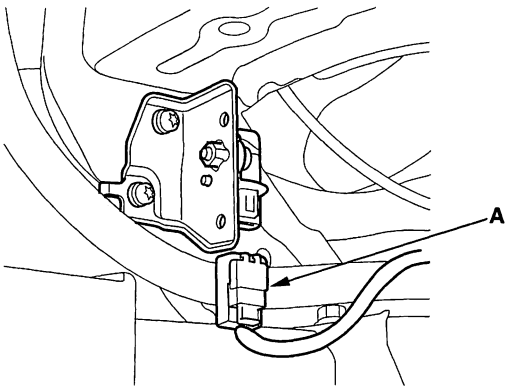


7. Disconnect SRS unit connector A (28P) from the SRS unit (see step 14 on page 24-23).

8. Check resistance between the No. 15 and No. 27 terminals of SRS unit connector A (28P). There should be an open circuit or at least 1 MΩ.

**SRS UNIT CONNECTOR A (28P)**

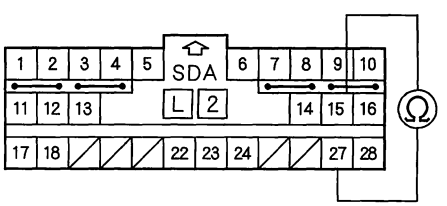


Wire side of female terminals

*Is the resistance as specified?*

**YES**—Go to step 9.

**NO**—Short in the engine compartment wire harness or dashboard wire harness; replace the faulty harness. ■



BACK

Protected by AR

9. Check resistance between the No. 15 terminal of SRS unit connector A (28P) and body ground, and between the No. 27 terminal and body ground. There should be an open circuit or at least 1 MΩ.

**SRS UNIT CONNECTOR A (28P)**

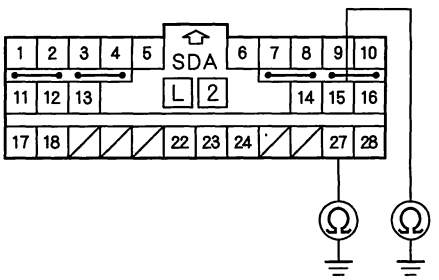


Wire side of female terminals

*Is the resistance as specified?*

**YES**—Go to step 10.

**NO**—Short to ground in the dashboard wire harness or the engine compartment wire harness; replace the faulty harness. ■

10. Reconnect the negative cable to the battery.

11. Turn the ignition switch ON (II).

12. Check for voltage between the No. 15 terminal of SRS unit connector A (28P) and body ground, and between the No. 27 terminal and body ground. There should be 1 V or less.

**SRS UNIT CONNECTOR A (28P)**

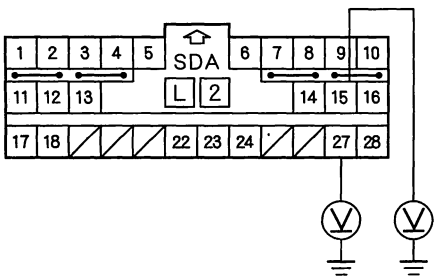


Wire side of female terminals

*Is the voltage as specified?*

**YES**—Go to step 13.

**NO**—Short to power in the engine compartment wire harness or the dashboard wire harness; replace the faulty harness. ■

13. Turn the ignition switch OFF.

14. Connect the SRS inflator simulator (jumper connector) and the black lead (A) of simulator lead L to the engine compartment wire harness 2P connector (B).

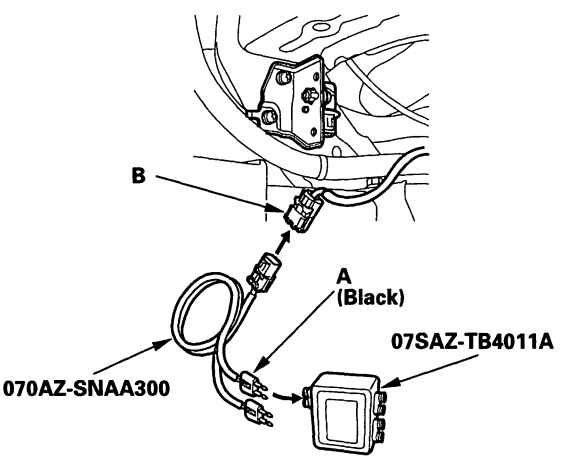


(cont'd)

Protected by AR



## DTC Troubleshooting (cont'd)

15. Check resistance between the No. 15 and No. 27 terminals of SRS unit connector A (28P). There should be 0—1.0 Ω.

**SRS UNIT CONNECTOR A (28P)**

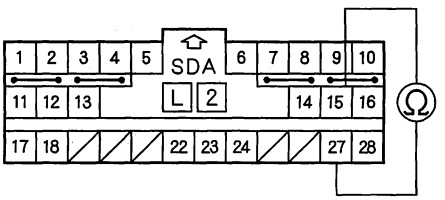


Wire side of female terminals

*Is the resistance as specified?*

**YES**—Faulty left front impact sensor or SRS unit; replace the left front impact sensor (see page 24-168). If the problem is still present, replace the SRS unit (see page 24-161).■

**NO**—Poor connection at C205, open in engine compartment wire harness, or open in dashboard wire harness. Inspect C205 (see page 22-22). If it is OK, replace the faulty harness.■



BACK

Protected by AR

## DTC 42-11: No Signal from the Right Front Impact Sensor

**Special Tools Required**
- SRS inflator simulator 07SAZ-TB4011A
- SRS simulator lead L 070AZ-SNAA300

1. Erase the DTC memory (see page 24-25).

2. Turn the ignition switch ON (II), and check that the SRS indicator comes on for about 6 seconds and then goes off.

   *Does the SRS indicator stay on, and is DTC 42-11 indicated?*

   **YES**—Go to step 3.

   **NO**—Intermittent failure, system is OK at this time. Go to Troubleshooting Intermittent Failures (see page 24-26). If another DTC is indicated, go to the DTC Troubleshooting Index.

3. Turn the ignition switch OFF.

4. Disconnect the negative cable from the battery, and wait for 3 minutes.

5. Check the connections between SRS unit connector A (28P) and the SRS unit, between the engine compartment wire harness 2P connector and the right front impact sensor (see page 24-12), and at connector C303 (see page 22-26).

   *Are the connections OK?*

   **YES**—Go to step 6.

   **NO**—Repair the poor connections and retest. If DTC 42-11 is still present, go to step 6.

6. Disconnect the engine compartment wire harness 2P connector (A) from the right front impact sensor.

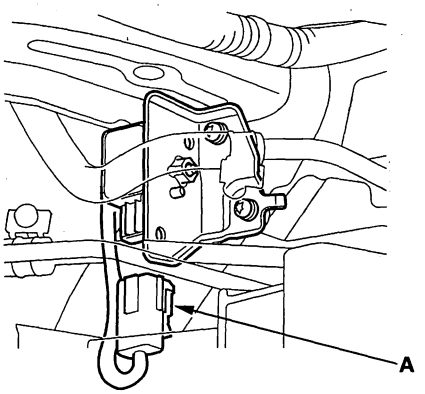


7. Disconnect SRS unit connector A (28P) from the SRS unit (see step 14 on page 24-23).

8. Check resistance between the No. 16 and No. 28 terminals of SRS unit connector A (28P). There should be an open circuit or at least 1 MΩ.

**SRS UNIT CONNECTOR A (28P)**

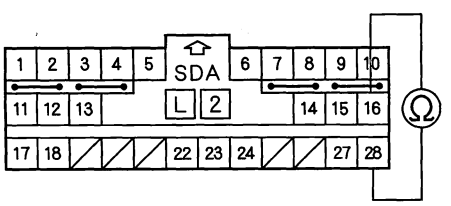


Wire side of female terminals

*Is the resistance as specified?*

**YES**—Go to step 9.

**NO**—Short in the engine compartment wire harness or dashboard wire harness; replace the faulty harness.■

(cont'd)

Protected by AR



## DTC Troubleshooting (cont'd)

9. Check resistance between the No. 16 terminal of SRS unit connector A (28P) and body ground, and between the No. 28 terminal and body ground. There should be an open circuit or at least 1 MΩ.

**SRS UNIT CONNECTOR A (28P)**

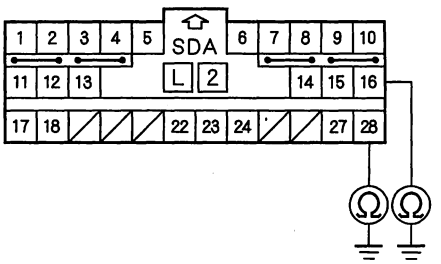


Wire side of female terminals

*Is the resistance as specified?*

**YES**—Go to step 10.

**NO**—Short to ground in the dashboard wire harness or the engine compartment wire harness; replace the faulty harness.■

10. Reconnect the negative cable to the battery.

11. Turn the ignition switch ON (II).

12. Check for voltage between the No. 16 terminal of SRS unit connector A (28P) and body ground, and between the No. 28 terminal and body ground. There should be 1 V or less.

**SRS UNIT CONNECTOR A (28P)**

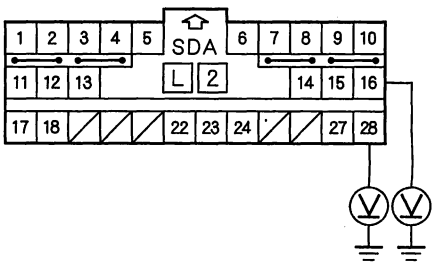


Wire side of female terminals

*Is the voltage as specified?*

**YES**—Go to step 13.

**NO**—Short to power in the engine compartment wire harness or dashboard wire harness; replace the faulty harness.■

13. Turn the ignition switch OFF.

14. Connect the SRS inflator simulator (jumper connector) and the black lead (A) of simulator lead L to the engine compartment wire harness 2P connector (B).

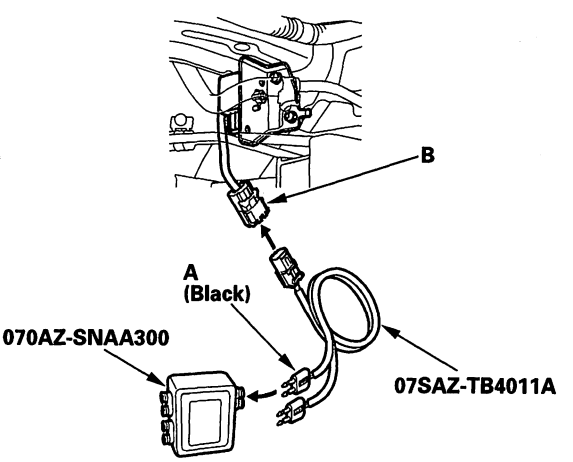




BACK

Protected by AR

15. Check resistance between the No. 16 and No. 28 terminals of SRS unit connector A (28P). There should be 0—1.0 Ω.

**SRS UNIT CONNECTOR A (28P)**

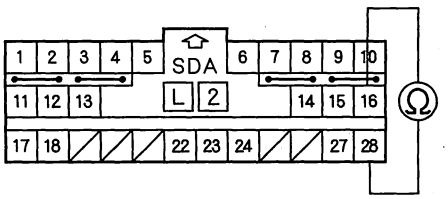


Wire side of female terminals

*Is the resistance as specified?*

**YES**—Faulty right front impact sensor or SRS unit; replace the right front impact sensor (see page 24-168). If the problem is still present, replace the SRS unit (see page 24-161). ■

**NO**—Poor connection at C303, open in engine compartment wire harness, or open in dashboard wire harness. Inspect C303 (see page 22-26). If it is OK, replace the faulty harness. ■

Protected by AR



## DTC Troubleshooting (cont'd)

### DTC 41-21, 41-81, 41-91, 41-A1, 41-B1, 41-B2: Internal Failure of the Left Front Impact Sensor

1. Erase the DTC memory (see page 24-25).

2. Turn the ignition switch ON (II), and check that the SRS indicator comes on for about 6 seconds and then goes off.

   *Does the SRS indicator stay on, and is 41-21, 41-81, 41-91, 41-A1, 41-B1, 41-B2 indicated?*

   **YES**—Replace the left front impact sensor (see page 24-168). If the DTC returns, replace the SRS unit (see page 24-161).■

   **NO**—Intermittent failure, system is OK at this time. Go to Troubleshooting Intermittent Failures (see page 24-26). If another DTC is indicated, go to the DTC Troubleshooting Index.

### DTC 42-21, 42-81, 42-91, 42-A1, 42-B1, 42-B2: Internal Failure of the Right Front Impact Sensor

1. Erase the DTC memory (see page 24-25).

2. Turn the ignition switch ON (II), and check that the SRS indicator comes on for about 6 seconds and then goes off.

   *Does the SRS indicator stay on, and is 42-21, 42-81, 42-91, 42-A1, 42-B1, 42-B2 indicated?*

   **YES**—Replace the right front impact sensor (see page 24-168). If the DTC returns, replace the SRS unit (see page 24-161).■

   **NO**—Intermittent failure, system is OK at this time. Go to Troubleshooting Intermittent Failures (see page 24-26). If another DTC is indicated, go to the DTC Troubleshooting Index.



BACK

Protected by AR

## **DTC 43-11:** No Signal from the Left Side Impact Sensor (first)

**Special Tools Required**
- SRS inflator simulator 07SAZ-TB4011A
- SRS simulator lead L 070AZ-SNAA300

1. Erase the DTC memory (see page 24-25).

2. Turn the ignition switch ON (II), and check that the SRS indicator comes on for about 6 seconds and then goes off.

   *Does the SRS indicator stay on, and is DTC 43-11 indicated?*

   **YES**—Go to step 4.

   **NO**—Intermittent failure, system is OK at this time. Go to Troubleshooting Intermittent Failures (see page 24-26). If another DTC is indicated, go to the DTC Troubleshootiong Index.

3. Turn the ignition switch OFF.

4. Disconnect the negative cable from the battery, and wait for 3 minites.

5. Disconnect both seat belt tensioner connectors (see step 10 on page 24-23) and both seat belt buckle tensioner connectors (see step 11 on page 24-23).

6. Disconnect the SRS main harness 4P connector (A) from the left side impact sensor (first) (see page 24-162).

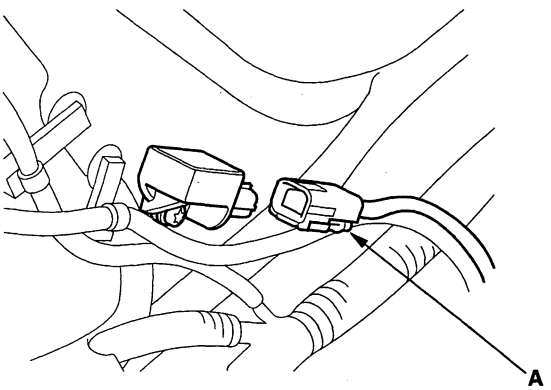


7. Disconnect SRS unit connector B (28P) from the SRS unit (see step 14 on page 24-23).

(cont'd)

Protected by AR



## DTC Troubleshooting (cont'd)

8. Check resistance between the No. 25 and No. 26 terminals of SRS unit connector B (28P). There should be an open circuit or at least 1 MΩ.

**SRS UNIT CONNECTOR B (28P)**

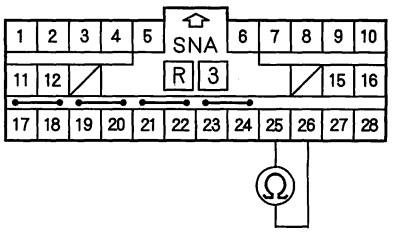


Wire side of female terminals

*Is the resistance as specified?*

**YES**—Go to step 9.

**NO**—Short in the SRS wire harness; replace the SRS wire harness.■

9. Check resistance between the No. 25 terminal of SRS unit connector B (28P) and body ground, and between the No. 26 terminal and body ground. There should be an open circuit or at least 1 MΩ.

**SRS UNIT CONNECTOR B (28P)**

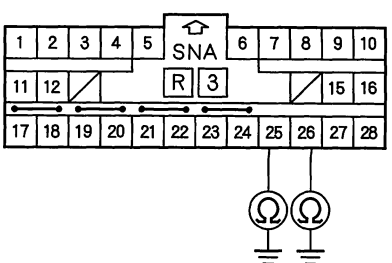


Wire side of female terminals

*Is the resistance as specified?*

**YES**—Go to step 10.

**NO**—Short to ground in the SRS wire harness; replace the SRS wire harness.■

10. Reconnect the negative cable to the battery.

11. Turn the ignition switch ON (II).

12. Check for voltage between the No. 25 terminal of SRS unit connector B (28P) and body ground, and between the No. 26 terminal and body ground. There should be 1 V or less.

**SRS UNIT CONNECTOR B (28P)**

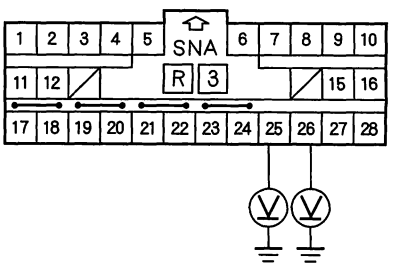


Wire side of female terminals

*Is the voltage as specified?*

**YES**—Go to step 13.

**NO**—Short to power in the SRS wire harness; replace the SRS wire harness.■



BACK

Protected by AR

13. Turn the ignition switch OFF.

14. Connect the SRS inflator simulator (jumper connector) and the black lead (A) of simulator lead L to the left side impact sensor 4P connector (B).

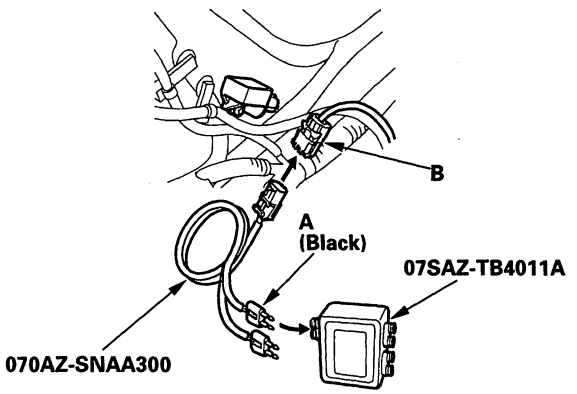


15. Check resistance between the No. 25 and No. 26 terminals of SRS unit connector B (28P). There should be 0—1.0 Ω.

**SRS UNIT CONNECTOR B (28P)**

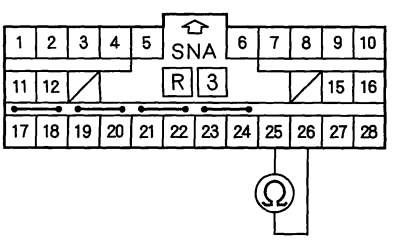


Wire side of female terminals

*Is the resistance as specified?*

**YES**—Faulty left side impact sensor (first) or SRS unit; replace the left side impact sensor (first) (see page 24-162). If the problem is still present, replace the SRS unit (see page 24-161).■

**NO**—Open in the SRS wire harness; replace the SRS wire harness.■

## DTC 44-11: No Signal from the Right Side Impact Sensor (first)

**Special Tools Required**
- SRS inflator simulator 07SAZ-TB4011A
- SRS simulator lead L 070AZ-SNAA300

1. Erase the DTC memory (see page 24-25).

2. Turn the ignition switch ON (II), and wait for 10 seconds.

3. Read the DTC (see page 24-24).

*Is DTC 44-11 indicated?*

**YES**—Go to step 4.

**NO**—Intermittent failure, system is OK at this time. Go to Troubleshooting Intermittent Failures (see page 24-26). If another DTC is indicated, go to the DTC Troubleshooting Index.■

(cont'd)

Protected by AR



## DTC Troubleshooting (cont'd)

4. Turn the ignition switch OFF.

5. Disconnect the negative cable from the battery, and wait for 3 minutes.

6. Disconnect both seat belt tensioner connectors (see step 10 on page 24-23) and both seat belt buckle tensioner connectors (see step 11 on page 24-23).

7. Disconnect the SRS wire harness 4P connector (A) from the right side impact sensor (first) (see step 3 on page 24-162).

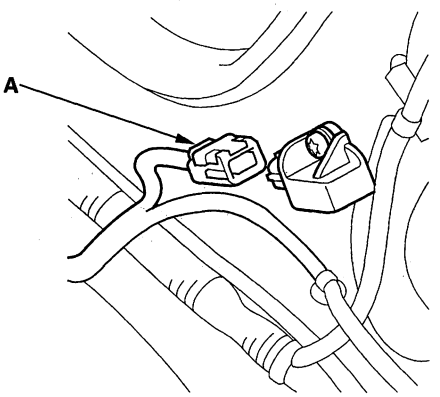


8. Disconnect SRS unit connector B (28P) from the SRS unit (see step 14 on page 24-23).

9. Check resistance between the No. 27 and No. 28 terminals of SRS unit connector B (28P). There should be an open circuit or at least 1 MΩ.

**SRS UNIT CONNECTOR B (28P)**

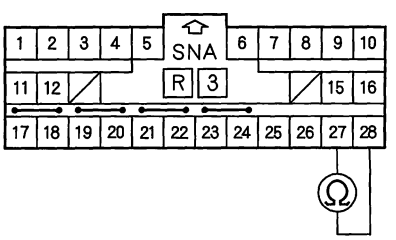


Wire side of female terminals

*Is the resistance as specified?*

**YES**—Go to step 10.

**NO**—Short in the SRS wire harness; replace the SRS wire harness.■

10. Check resistance between the No. 28 terminal of SRS unit connector B (28P) and body ground, and between the No. 27 terminal and body ground. There should be an open circuit or at least 1 MΩ.

**SRS UNIT CONNECTOR B (28P)**

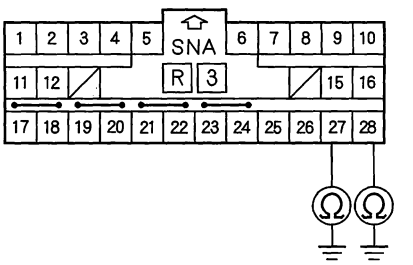


Wire side of female terminals

*Is the resistance as specified?*

**YES**—Go to step 11.

**NO**—Short to ground in the SRS wire harness; replace the SRS wire harness.■



BACK

Protected by AR

11. Reconnect the negative cable to the battery.

12. Turn the ignition switch ON (II).

13. Check for voltage between the No. 28 terminal of SRS unit connector B (28P) and body ground, and between the No. 27 terminal and body ground. There should be 1 V or less.

**SRS UNIT CONNECTOR B (28P)**

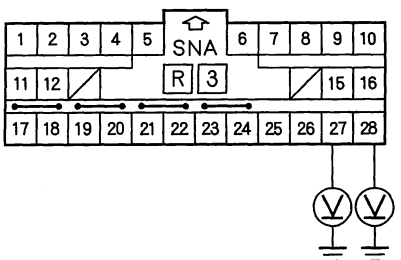


Wire side of female terminals

*Is the voltage as specified?*

**YES**—Go to step 14.

**NO**—Short to power in the SRS wire harness; replace the SRS wire harness.■

14. Turn the ignition switch OFF.

15. Connect the SRS inflator simulator (jumper connector) and the black lead (A) of simulator lead L to the right side impact sensor 4P connector (B).

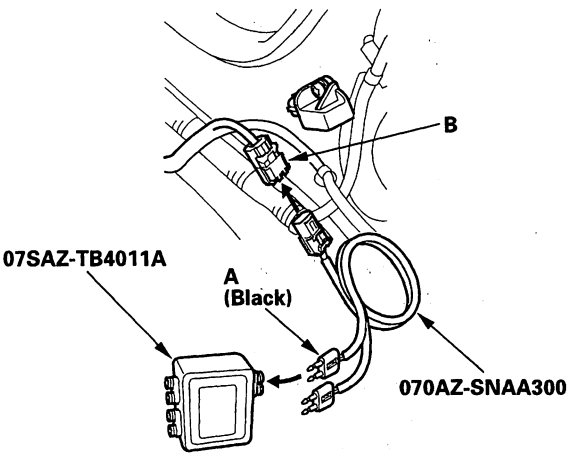


16. Check resistance between the No. 27 and No. 28 terminals of SRS unit connector B (28P). There should be 0—1.0 Ω.

**SRS UNIT CONNECTOR B (28P)**

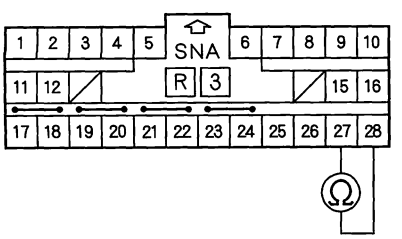


Wire side of female terminals

*Is the resistance as specified?*

**YES**—Faulty right side impact sensor (first) or SRS unit; replace the right side impact sensor (first) (see page 24-162). If the problem is still present, replace the SRS unit (see page 24-161).■

**NO**—Open in the SRS wire harness; replace the SRS wire harness. ■

BACK

Protected by AR



## DTC Troubleshooting (cont'd)

### DTC 43-21, 43-81, 43-91, 43-A1, 43-B1, 43-B2: Internal Failure of the Left Side Impact Sensor (first)

1. Erase the DTC memory (see page 24-25).

2. Turn the ignition switch ON (II), and check that the SRS indicator comes on for about 6 seconds and then goes off.

   *Does the SRS indicator stay on, and is DTC 43-21, 43-81, 43-91, 43-A1, 43-B1, or 43-B2 indicated?*

   **YES**—Replace the left side impact sensor (first) (see page 24-162). If the DTC returns, replace the SRS unit (see page 24-161).■

   **NO**—Intermittent failure, system is OK at this time. Go to Troubleshooting Intermittent Failures (see page 24-26). If another DTC is indicated, go to the DTC Troubleshooting Index.

### DTC 44-21, 44-81, 44-91, 44-A1, 44-B1, 44-B2 Internal Failure of the Right Side Impact Sensor (first)

1. Erase the DTC memory (see page 24-25).

2. Turn the ignition switch ON (II), and check that the SRS indicator comes on for about 6 seconds and then goes off.

   *Does the SRS indicator stay on, and is DTC 44-21, 44-81, 44-91, 44-A1, 44-B1, or 44-B2 indicated?*

   **YES**—Replace the right side impact sensor (first) (see page 24-162). If the DTC returns, replace the SRS unit (see page 24-161).■

   **NO**—Intermittent failure, system is OK at this time. Go to Troubleshooting Intermittent Failures (see page 24-26). If another DTC is indicated, go to the DTC Troubleshooting Index.



BACK

Protected by AR

## DTC 45-11: No Signal from the Left Side Impact Sensor (second)

**Special Tools Required**
- SRS inflator simulator 07SAZ-TB4011A
- SRS simulator lead L 070AZ-SNAA300

1. Erase the DTC memory (see page 24-25).

2. Turn the ignition switch ON (II), and wait for 10 seconds.

3. Read the DTC (see page 24-24).

   *Is DTC 45-11 indicated?*

   **YES**—Go to step 4.

   **NO**—Intermittent failure, system is OK at this time. Go to Troubleshooting Intermittent Failures (see page 24-26). If another DTC is indicated, go to the DTC Troubleshooting Index.

4. Read the DTC.

   *Is DTC 43-11 also indicated?*

   **YES**—Faulty left side impact sensor (second); replace the left side impact sensor (second) (see page 24-163). ■

   **NO**—Go to step 5.

5. Turn the ignition switch OFF.

6. Disconnect the negative cable from the battery, and wait for 3 minutes.

7. Disconnect SRS wire harness 4P connector (A) from the left side impact sensor (second) (see page 24-163).

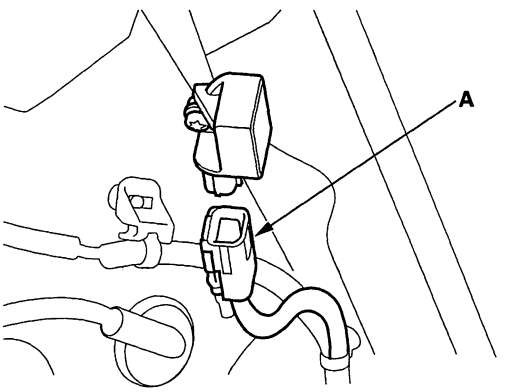


8. Disconnect the SRS wire harness 4P connector (A) from the left side impact sensor (first) (see page 24-162).

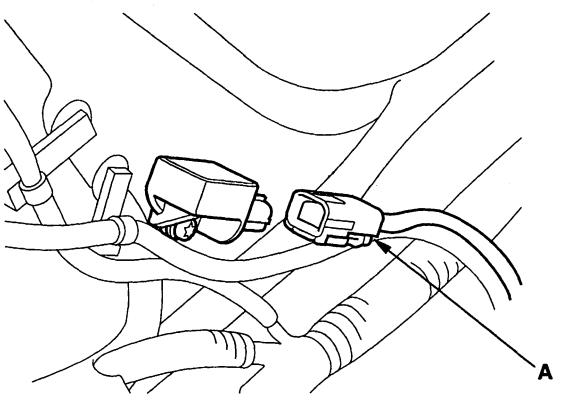


(cont'd)

BACK

Protected by AR



## DTC Troubleshooting (cont'd)

9. Check resistance between the No. 1 and No. 2 terminals of left side impact sensor (second) 2P connector. There should be an open circuit or at least 1 MΩ.

**LEFT SIDE IMPACT SENSOR (SECOND) 2P CONNECTOR**

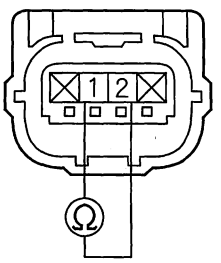


Terminal side of female terminals

*Is the resistance as specified?*

**YES**—Go to step 10.

**NO**—Short in the SRS wire harness; replace the SRS wire harness.■

10. Check resistance between the No. 1 terminal of left side impact sensor (second) 2P connector and body ground, and between the No. 2 terminal and body ground. There should be an open circuit or at least 1 MΩ.

**LEFT SIDE IMPACT SENSOR (SECOND) 2P CONNECTOR**

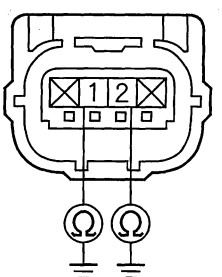


Terminal side of female terminals

*Is the resistance as specified?*

**YES**—Go to step 11.

**NO**—Short to ground in the SRS wire harness; replace the SRS wire harness.■

11. Reconnect the negative cable to the battery.

12. Turn the ignition switch ON (II).

13. Check for voltage between the No. 1 terminal of left side impact sensor (second) 2P connector and body ground, and between the No. 2 terminal and body ground. There should be 1 V or less.

**LEFT SIDE IMPACT SENSOR (SECOND) 2P CONNECTOR**

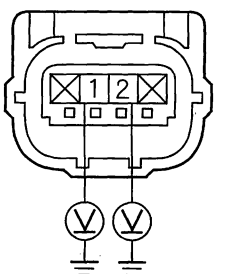


Terminal side of female terminals

*Is the voltage as specified?*

**YES**—Go to step 14.

**NO**—Short to power in the SRS wire harness; replace the SRS wire harness.■

14. Turn the ignition switch OFF.

15. Connect the SRS inflator simulator (jumper connector) and the black lead (A) of simulator lead L to the left side impact sensor (first) 2P connector (B).

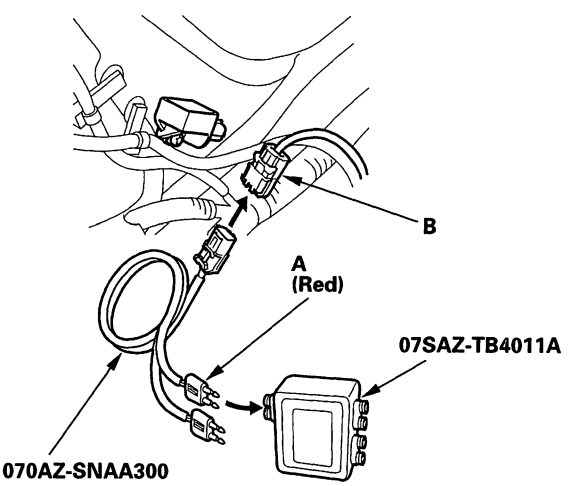




BACK

Protected by AR

16. Check resistance between the No. 1 and No. 2 terminals of left side impact sensor (second) 2P connector. There should be 0—1.0 Ω.

**LEFT SIDE IMPACT SENSOR (SECOND) 2P CONNECTOR**

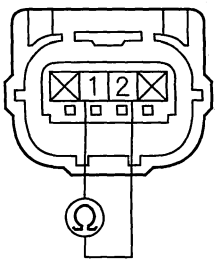


Terminal side of female terminals

*Is the resistance as specified?*

**YES**—Faulty left side impact sensor (second) or poor connection at left side impact sensor (second) 2P connector. Check the connection; If the connection is OK, replace the left side impact sensor (second) (see page 24-163).■

**NO**—Open in the SRS wire harness; replace the SRS wire harness.■

## DTC 46-11: No Signal from the Right Side Impact Sensor (second)

**Special Tools Required**
- SRS inflator simulator 07SAZ-TB4011A
- SRS simulator lead L 070AZ-SNAA300

1. Erase the DTC memory (see page 24-25).

2. Turn the ignition switch ON (II), and wait for 10 seconds.

3. Read the DTC (see page 24-24).

   *Is DTC 46-11 indicated?*

   **YES**—Go to step 4.

   **NO**—Intermittent failure, system is OK at this time. Go to Troubleshooting Intermittent Failures (see page 24-26). If another DTC is indicated, go to the DTC Troubleshooting Index.■

4. Turn the ignition switch OFF.

5. Disconnect the negative cable from the battery, and wait for 3 minutes.

(cont'd)

Protected by AR



## DTC Troubleshooting (cont'd)

6. Disconnect the SRS wire harness 2P connector (A) from the right side impact sensor (second) (see page 24-163).

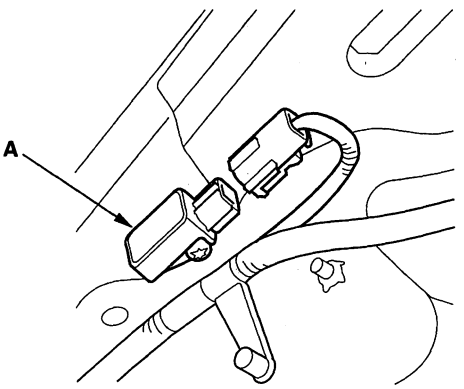


7. Disconnect the SRS wire harness 4P connector (A) from the right side impact sensor (first) (see page 24-162).

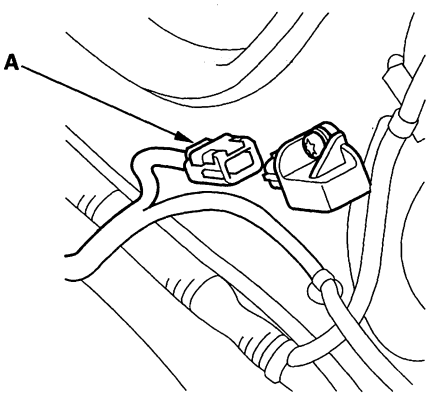


8. Check resistance between the No. 1 and No. 2 terminals of right side impact sensor (second) 2P connector. There should be an open circuit or at least 1 MΩ.

**RIGHT SIDE IMPACT SENSOR (SECOND) 2P CONNECTOR**

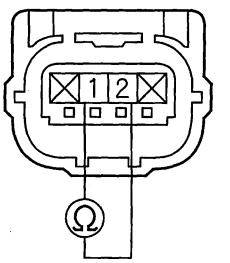


Terminal side of female terminals

*Is the resistance as specified?*

**YES**—Go to step 9.

**NO**—Short in the SRS wire harness; replace the SRS wire harness.■

9. Check resistance between the No. 1 terminal of right side impact sensor (second) 2P connector and body ground, and between the No. 2 terminal and body ground. There should be an open circuit or at least 1 MΩ.

**RIGHT SIDE IMPACT SENSOR (SECOND) 2P CONNECTOR**

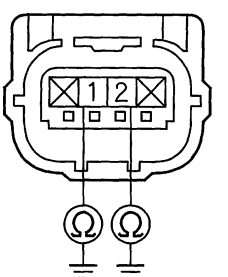


Terminal side of female terminals

*Is the resistance as specified?*

**YES**—Go to step 10.

**NO**—Short to ground in the SRS wire harness; replace the SRS wire harness.■



BACK

Protected by AR

10. Reconnect the negative cable to the battery.

11. Turn the ignition switch ON (II).

12. Check for voltage between the No. 1 terminal of right side impact sensor (second) 2P connector and body ground, and between the No. 2 terminal and body ground. There should be 1 V or less.

**RIGHT SIDE IMPACT SENSOR (SECOND) 2P CONNECTOR**

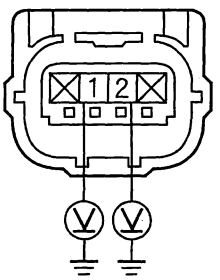


Terminal side of female terminals

*Is the voltage as specified?*

**YES**—Go to step 13.

**NO**—Short to power in the SRS wire harness; replace the SRS wire harness.■

13. Turn the ignition switch OFF.

14. Connect the SRS inflator simulator (jumper connector) and the black lead (A) of simulator lead L to the right side impact sensor (first) 4P connector (B).

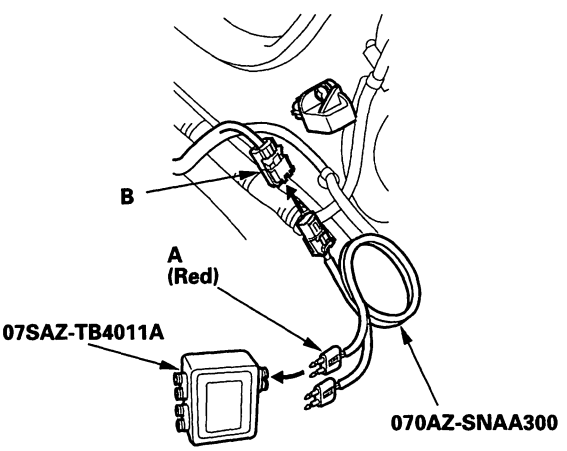


15. Check resistance between the No. 1 and No. 2 terminals of right side impact sensor (second) 2P connector. There should be 0—1.0 Ω.

**RIGHT SIDE IMPACT SENSOR (SECOND) 2P CONNECTOR**

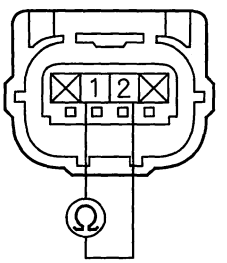


Terminal side of female terminals

*Is the resistance as specified?*

**YES**—Faulty right side impact sensor (second) or poor connection at right side impact sensor (second) 2P connector. Check the connection; If the connection is OK, replace the right side impact sensor (second) (see page 24-163).■

**NO**—Open in the SRS wire harness; replace the SRS wire harness.■

Protected by AR



## DTC Troubleshooting (cont'd)

### DTC 45-21, 45-81, 45-91, 45-A1, 45-B1, 45-B2: Internal Failure of the Left Side Impact Sensor (second)

1. Erase the DTC memory (see page 24-25).

2. Turn the ignition switch ON (II), and check that the SRS indicator comes on for about 6 seconds and then goes off.

   *Does the SRS indicator stay on, and is DTC 45-21, 45-81, 45-91, 45-A1, 45-B1, or 45-B2 indicated?*

   **YES**—Replace the left side impact sensor (second) (see page 24-163). If the DTC returns, replace the SRS unit (see page 24-161). ■

   **NO**—Intermittent failure, system is OK at this time. Go to Troubleshooting Intermittent Failures (see page 24-26). If another DTC is indicated, go to the DTC Troubleshooting Index.

### DTC 46-21, 46-81, 46-91, 46-A1, 46-B1, 46-B2: Internal Failure of the Right Side Impact Sensor (second)

1. Erase the DTC memory (see page 24-25).

2. Turn the ignition switch ON (II), and check that the SRS indicator comes on for about 6 seconds and then goes off.

   *Does the SRS indicator stay on, and is DTC 46-21, 46-81, 46-91, 46-A1, 46-B1, or 46-B2 indicated?*

   **YES**—Replace the right side impact sensor (second) (see page 24-163). If the DTC returns, replace the SRS unit (see page 24-161). ■

   **NO**—Intermittent failure, system is OK at this time. Go to Troubleshooting Intermittent Failures (see page 24-26). If another DTC is indicated, go to the DTC Troubleshooting Index.



BACK

Protected by AR

**DTC 51-xx, 52-xx, 53-xx, 54-xx, 55-xx, 57-xx ("x" can be 0 thru 9 or A thru F):** Internal Failure of the SRS unit

NOTE: Before troubleshooting any of these DTCs, check the battery/system voltage. if the voltage is low, repair the charging system or replace the battery before troubleshooting the SRS. If the battery/system voltage is now OK, ask the customer if the battery ever went dead. A dead battery may trigger one of these DTCs.

1. Erase the DTC memory (see page 24-25).

2. Turn the ignition switch ON (II), and check that the SRS indicator comes on for about 6 seconds and then goes off.

   *Does the SRS indicator stay on, and is 51-xx, 52-xx, 53-xx, 54-xx, 55-xx, or 57-xx indicated?*

   **YES**—Replace the SRS unit (see page 24-161).■

   **NO**—Intermittent failure, system is OK at this time. Go to Troubleshooting Intermittent Failures (see page 24-26). If another DTC is indicated, go to the DTC Troubleshooting Index.

**DTC E2-11, E4-11, F1-11, F2-11, F3-11, F4-11, F5-11, F6-11:** Airbags, Side Airbags, Side Curtain Airbags, Seat Belt Tensioners and/or Seat Belt Buckle Tensioner Deployed

The SRS unit must be replaced after any airbags and/or tensioners have deployed (see page 24-154).■

NOTE:
- DTC E2-11 is set if the system triggered airbag deployment but the front passenger's airbag was prevented from deploying because of the seat weight sensor.
- DTC E4-11 is set if the system triggered passenger's side airbag deployment but the airbag was prevented from deploying by the ODS. Replace the right side impact sensor (see page 24-162).

Protected by AR



## DTC Troubleshooting (cont'd)

### DTC 61-11: Open in Driver's Seat Belt Buckle Switch

1. Erase the DTC memory (see page 24-25).

2. Turn the ignition switch ON (II), then buckle and unbuckle the driver's seat belt several times.

3. Read the DTC (see page 24-24).

   *Is DTC 61-11 indicated?*

   **YES**—Go to step 4.

   **NO**—Intermittent failure, system is OK at this time. Go to Troubleshooting Intermittent Failures (see page 24-26). If another DTC is indicated, go to the DTC Troubleshooting Index.

4. From the system selection menu on the HDS select SRS, then select SRS again, then select PARAMETER INFORMATION, then Buckle Switch, Seat Position Sensor and check the status on the HDS screen for FRONT LEFT SEAT BELT BUCKLE SWITCH.

   - If UNBUCKLED is indicated only when the driver's seat belt is buckled, go to step 5.
   - If BUCKLED is indicated only when the driver's seat belt is unbuckled, go to step 12.
   - If OPEN is indicated only when the driver's seat belt is buckled and unbuckled, go to step 20.

5. Turn the ignition switch OFF.

6. Disconnect the driver's seat wire harness 3P connector from the driver's seat belt buckle switch 3P connector (A).

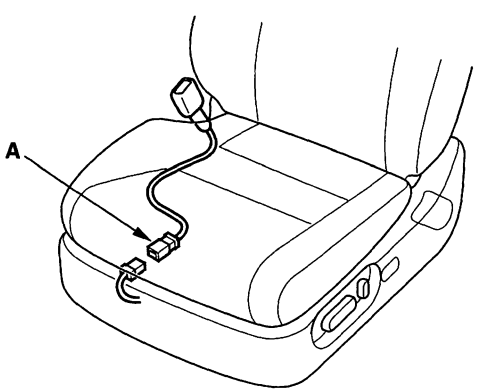


7. Buckle the driver's seat belt. Check resistance between the No. 1 and No. 3 terminals of the driver's seat belt buckle switch 3P connector. There should be 0—1 Ω.

**DRIVER'S SEAT BELT BUCKLE SWITCH 3P CONNECTOR**

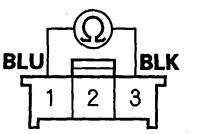


Wire side of female terminals

*Is the resistance as specified?*

**YES**—Go to step 8.

**NO**—Replace the driver's seat belt buckle assembly (see page 24-6), then erase the DTC. ■

8. Disconnect the negative cable from the battery, and wait for 3 minutes.

9. Disconnect both seat belt tensioner connectors (see step 10 on page 24-23) and both seat belt buckle tensioner connectors (see step 11 on page 24-23).



BACK

Protected by AR

10. Disconnect SRS unit connector B (28P) from the SRS unit (see step 14 on page 24-23).

11. Check resistance between the No. 12 terminal of SRS unit connector B (28P) and the No. 1 terminal of the driver's seat wire harness 3P connector. There should be 0—1 Ω.

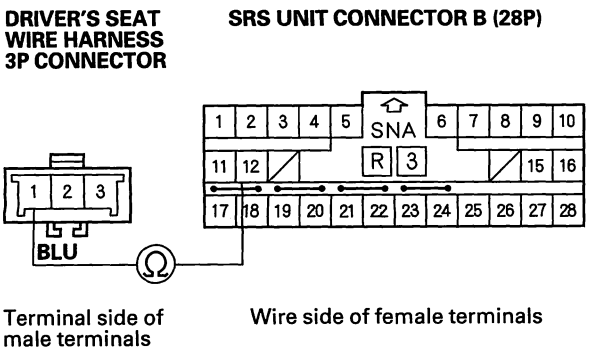


*Is the resistance as specified?*

**YES**—Faulty SRS unit or poor connection at SRS unit connector B (28P) and the SRS unit. Check the connection between the connector and the SRS unit. If the connection is OK, replace the SRS unit (see page 24-161).■

**NO**—Open in the SRS wire harness, driver's seat wire harness or poor connection at C701 (see page 22-38). Check the connection; if the connection is OK, replace the faulty harness.■

12. Turn the ignition switch OFF.

13. Disconnect the driver's seat wire harness 3P connector from the driver's seat belt buckle switch 3P connector (A).

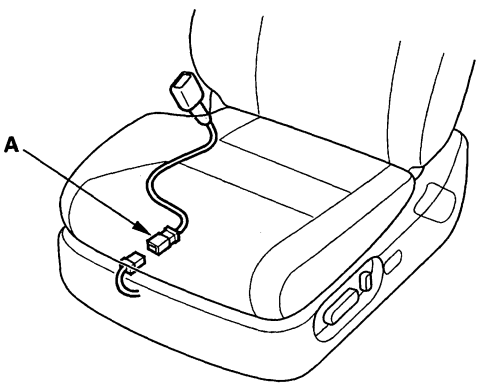


14. Unbuckle the driver's seat belt.

15. Check resistance between the No. 2 and No. 3 terminals of the driver's seat belt buckle switch 3P connector. There should be 0—1 Ω.

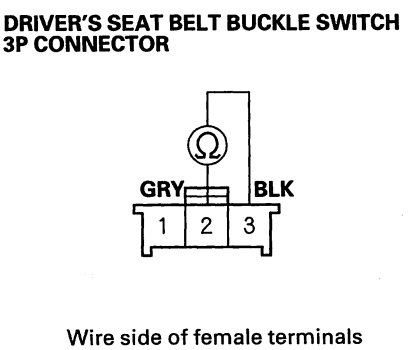


*Is the resistance as specified?*

**YES**—Go to step 16.

**NO**—Replace the driver's seat belt buckle assembly (see page 24-6), then erase the DTC.■

(cont'd)

Protected by AR



## DTC Troubleshooting (cont'd)

16. Disconnect the negative cable from the battery, and wait for 3 minutes.

17. Disconnect the seat belt tensioner 4P connectors (see step 10 on page 24-23) and both seat belt buckle tensioner 4P connectors (see step 11 on page 24-23).

18. Disconnect SRS unit connector B (28P) from the SRS unit (see step 14 on page 24-23).

19. Check resistance between the No. 11 terminal of SRS unit connector B (28P) and the No. 2 terminal of the driver's seat wire harness 3P connector. There should be 0—1 Ω.

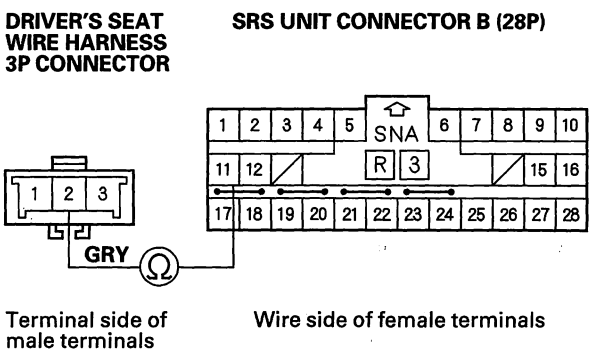


*Is the resistance as specified?*

**YES**—Faulty SRS unit or poor connection at SRS unit connector B (28P) and the SRS unit. Check the connection between the connector and the SRS unit. If the connection is OK, replace the SRS unit (see page 24-161).■

**NO**—Open in the SRS wire harness, driver's seat wire harness or poor connection at C701 (see page 22-38). Check the connection; if the connection is OK, replace the faulty harness.■

20. Turn the ignition switch OFF.

21. Disconnect the driver's seat wire harness 3P connector from the driver's seat belt buckle switch 3P connector (A).

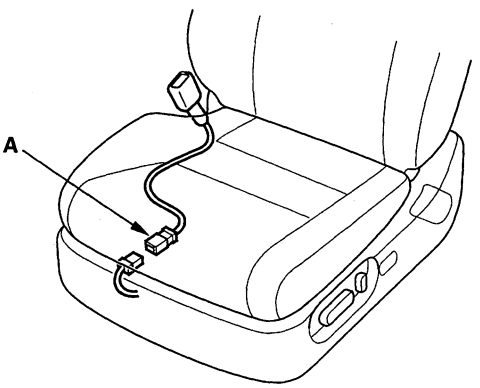


22. Unbuckle the driver's seat belt.

23. Check resistance between the No. 3 terminal of the driver's power seat wire harness 3P connector and body ground. There should be 0—1 Ω.

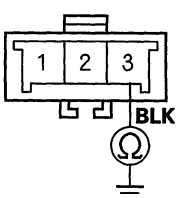


*Is the resistance as specified?*

**YES**—Replace the driver's seat belt buckle assembly (see page 24-6), then erase the DTC.■

**NO**—Open in the SRS wire harness or poor connection at C701 (see page 22-38). Check the connection; if the connection is OK, replace the driver's sear wire harness or poor ground connection at G551 (see page 22-38).
If G551 is OK, replace the faulty harness.■



BACK

Protected by AR

## DTC 61-21: Short in Driver's Seat Belt Buckle Switch

1. Erase the DTC memory (see page 24-25).

2. Turn the ignition switch ON (II), then buckle and unbuckle the driver's seat belt several times.

3. Read the DTC (see page 24-24).

   *Is DTC 61-21 indicated?*

   **YES**—Go to step 4.

   **NO**—Intermittent failure, system is OK at this time. Go to Troubleshooting Intermittent Failures (see page 24-26). If another DTC is indicated, go to the DTC Troubleshooting Index.

4. Turn the ignition switch OFF.

5. Disconnect the driver's seat wire harness 3P connector from the driver's seat belt buckle switch 3P connector (A).

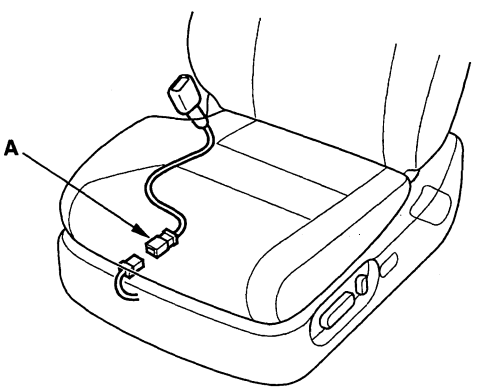


6. Turn the ignition switch ON (II).

7. From the system selection menu on the HDS, select SRS, then select SRS again, then select PARAMETER INFORMATION, then Buckle Switch, Seat Position Sensor and check the status on the HDS screen for FRONT LEFT SEAT BELT BUCKLE SWITCH.

   *Is OPEN indicated on the HDS?*

   **YES**—Replace the driver's seat belt buckle assembly (see page 24-6), then erase the DTC. ■

   **NO**—Go to step 8.

8. Turn the ignition switch OFF.

9. Disconnect the negative cable from the battery, and wait for 3 minutes.

10. Disconnect the seat belt tensioner 4P connectors (see step 10 on page 24-23) and both seat belt buckle tensioner 4P connector (see step 11 on page 24-23).

11. Disconnect SRS unit connector B (28P) from the SRS unit (see step 14 on page 24-23).

12. Check resistance between the No. 1 terminal of the driver's seat wire harness 3P connector and body ground. There should be an open circuit or at lest 1 MΩ.

**DRIVER'S SEAT WIRE HARNESS 3P CONNECTOR**

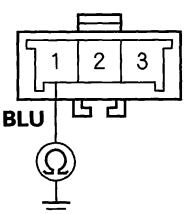


Terminal side of male terminals

*Is the resistance as specified?*

**YES**—Go to step 13.

**NO**—Short to ground in the SRS main harness or driver's seat wire harness; replace the faulty harness. ■

(cont'd)

Protected by AR



## DTC Troubleshooting (cont'd)

13. Check resistance between the No. 2 terminals of the driver's seat wire harness 3P connector and body ground. There should be an open circuit or at least 1 MΩ.

**DRIVER'S SEAT WIRE HARNESS 3P CONNECTOR**

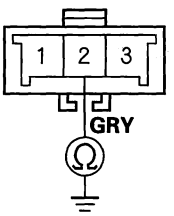


Terminal side of male terminals

*Is there continuity?*

**YES**—Faulty SRS unit; replace the SRS unit (see page 24-161).■

**NO**—Short to ground in the driver's seat wire harness; replace the driver's seat wire harness.■

### DTC 62-11: Open in Front Passenger's Seat Belt Buckle Switch

1. Erase the DTC memory (see page 24-25).

2. Turn the ignition switch ON (II), then buckle and unbuckle the front passenger's seat belt several times.

3. Read the DTC (see page 24-24).

   *Is DTC 62-11 indicated?*

   **YES**—Go to step 4.

   **NO**—Intermittent failure, system is OK at this time. Go to Troubleshooting Intermittent Failures (see page 24-26). If another DTC is indicated, go to the DTC Troubleshooting Index.

4. From the system selection menu on the HDS, select SRS, then select SRS again, then select PARAMETER INFORMATION, then Buckle Switch, Seat Position Sensor and check the status on the HDS screen for FRONT RIGHT SEAT BELT BUCKLE SWITCH.

   - If UNBUCKLED is indicated only when the front passenger's seat belt is buckled, go to step 5.
   - If BUCKLED is indicated only when the front passenger's seat belt is unbuckled, go to step 12.
   - If OPEN is indicated only when the front passenger's seat belt is buckled and unbuckled, go to step 20.

5. Turn the ignition switch OFF.



BACK

Protected by AR

6. Disconnect the ODS unit harness 3P connector from the front passenger's seat belt buckle switch 3P connector (A).

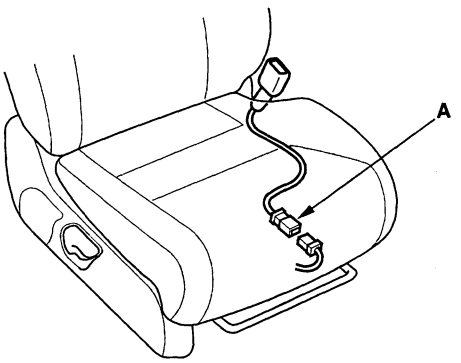


7. Buckle the front passenger's seat belt. Check resistance between the No. 1 and No. 3 terminals of the front passenger's seat belt buckle switch 3P connector. There should be 0—1 Ω.

**FRONT PASSENGER'S SEAT BELT BUCKLE SWITCH 3P CONNECTOR**

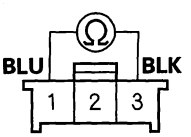


Wire side of female terminals

*Is the resistances specified?*

**YES**—Go to step 8.

**NO**—Replace the front passenger's seat belt buckle assembly (see page 24-6), then erase the DTC. ■

8. Disconnect the negative cable from the battery, and wait for 3 minutes.

9. Disconnect both seat belt tensioner connectors (see step 10 on page 24-23) and both seat belt buckle tensioner connectors (see step 11 on page 24-23).

10. Disconnect SRS unit connector B (28P) from the SRS unit (see step 14 on page 24-23).

11. Check resistance between the No. 16 terminal of SRS unit connector B (28P) and the No. 1 terminal of the ODS unit harness 3P connector. There should be 0—1 Ω.

**ODS UNIT HARNESS 3P CONNECTOR** **SRS UNIT CONNECTOR B (28P)**

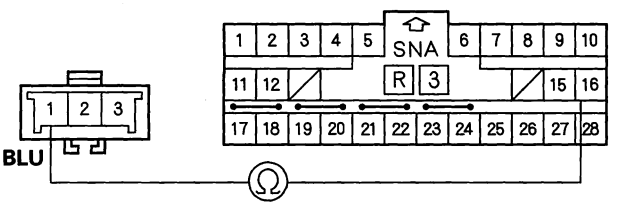


Terminal side of male terminals

Wire side of female terminals

*Is the resistance as specified?*

**YES**—Faulty SRS unit or poor connection at SRS unit connector B (28P) and the SRS unit. Check the connection between the connector and the SRS unit. If the connection is OK, replace the SRS unit (see page 24-161). ■

**NO**—Open in the SRS wire harness, ODS unit harness or poor connection at C703. Check the connection; if the connection is OK, replace the faulty harness. ■

(cont'd)

Protected by AR



## DTC Troubleshooting (cont'd)

12. Turn the ignition switch OFF.

13. Disconnect the ODS unit harness 3P connector from the front passenger's seat belt buckle switch 3P connector (A).

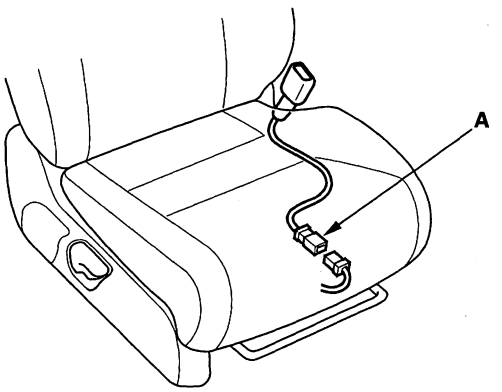


14. Unbuckle the front passenger's seat belt.

15. Check resistance between the No. 2 and No. 3 terminals of the front passenger's seat belt buckle switch 3P connector. There should be 0—1 Ω.

**FRONT PASSENGER'S SEAT BELT BUCKLE SWITCH 3P CONNECTOR**

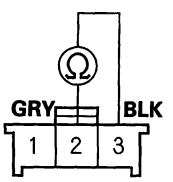


Wire side of female terminals

*Is the resistance as specified?*

**YES**—Go to step 16.

**NO**—Replace the front passenger's seat belt buckle assembly (see page 24-6), then erase the DTC.■

16. Disconnect the negative cable from the battery, and wait for 3 minutes.

17. Disconnect both seat belt tensioner 4P connectors (see step 10 on page 24-23) and both seat belt buckle tensioner 4P connectors (see step 11 on page 24-23).

18. Disconnect SRS unit connector B (28P) from the SRS unit (see step 14 on page 24-23).

19. Check resistance between the No. 15 terminal of SRS unit connector B (28P) and the No. 2 terminal of the ODS unit harness 3P connector. There should be 0—1 Ω.

**ODS UNIT HARNESS 3P CONNECTOR** **SRS UNIT CONNECTOR B (28P)**

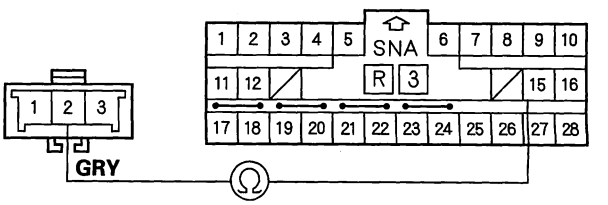


Terminal side of male terminals

Wire side of female terminals

*Is the resistance as specified?*

**YES**—Faulty SRS unit or poor connection at SRS unit connector B (28P) and the SRS unit. Check the connection between the connector and the SRS unit. If the connection is OK, replace the SRS unit (see page 24-161).■

**NO**—Open in the SRS wire harness, ODS unit harness or poor connection at C703. Check the connection; if the connection is OK, replace the faulty harness.■



BACK

Protected by AR

20. Turn the ignition switch OFF.

21. Disconnect the ODS unit harness 3P connector from the front passenger's seat belt buckle switch 3P connector (A).

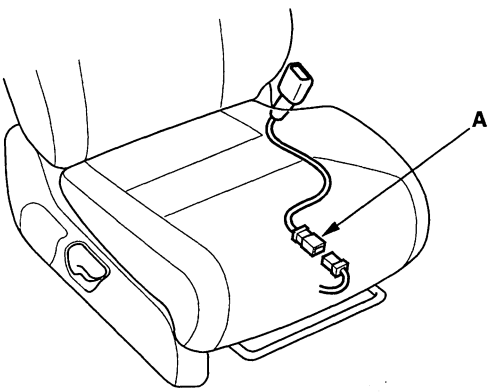


22. Unbuckle the front passenger's seat belt.

23. Check resistance between the No. 3 terminal of the ODS unit harness 3P connector and body ground. There should be 0—1 Ω.

**ODS UNIT HARNESS 3P CONNECTOR**

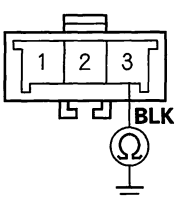


Terminal side of male terminals

*Is the resistance as specified?*

**YES**—Replace the front passenger's seat belt buckle assembly (see page 24-6), then erase the DTC. ■

**NO**—Open in the SRS wire harness, ODS unit harness, poor connection at C703 and poor ground connection at G552 (see page 22-39). C703 and G552 connection is OK, replace the faulty harness. ■

## DTC 62-21: Short in Front Passenger's Seat Belt Buckle Switch

1. Erase the DTC memory (see page 24-25).

2. Turn the ignition switch ON (II), then buckle and unbuckle the front passenger's seat belt several times.

3. Read the DTC (see page 24-24).

   *Is DTC 62-21 indicated?*

   **YES**—Go to step 4.

   **NO**—Intermittent failure, system is OK at this time. Go to Troubleshooting Intermittent Failures (see page 24-26). If another DTC is indicated, go to the DTC Troubleshooting Index.

4. Turn the ignition switch OFF.

5. Disconnect the ODS unit harness 3P connector from the front passenger's seat belt buckle switch 3P connector (A).

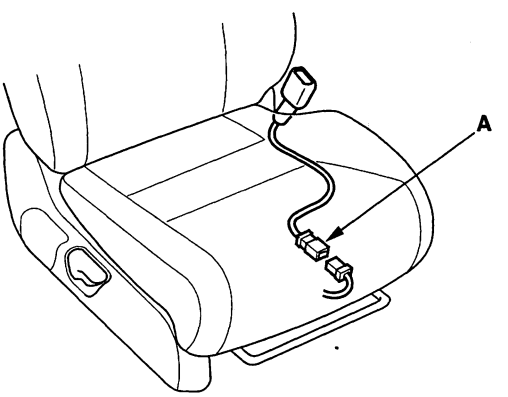


6. Turn the ignition switch ON (II).

(cont'd)

Protected by AR



## DTC Troubleshooting (cont'd)

7. From the system selection menu on the HDS, select SRS, then select SRS again, then select PARAMETER INFORMATION, then Buckle Switch, Seat Position Sensor and check the status on the HDS screen for FRONT RIGHT SEAT BELT BUCKLE SWITCH.

   *Is OPEN indicated on the HDS?*

   **YES**—Replace the front passenger's seat belt buckle assembly (see page 24-6), then clear the DTC.■

   **NO**—Go to step 8.

8. Turn the ignition switch OFF.

9. Disconnect the negative cable from the battery, and wait for 3 minutes.

10. Disconnect both seat belt tensioner 4P connectors (see step 10 on page 24-23) and both seat belt buckle tensioner 4P connectors (see step 11 on page 24-23).

11. Disconnect SRS unit connector B (28P) from the SRS unit (see step 14 on page 24-23).

12. Check resistance between the No. 1 terminal of the ODS unit harness 3P connector and body ground. There should be an open circuit or at least 1 MΩ.

**ODS UNIT HARNESS 3P CONNECTOR**

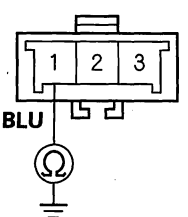


Terminal side of male terminals

*Is the resistance as specified?*

**YES**—Go to step 13.

**NO**—Short to ground in the SRS wire harness or ODS unit harness; replace the faulty harness.■

13. Check resistance between the No. 2 terminal of the ODS unit harness 3P connector and body ground. There should be an open circuit or at least 1 MΩ.

**ODS UNIT HARNESS 3P CONNECTOR**

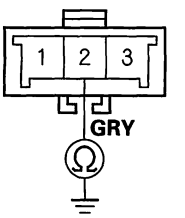


Terminal side of male terminals

*Is there continuity?*

**YES**—Faulty SRS unit; Replace the SRS unit (see page 24-161).■

**NO**—Short to ground in the SRS wire harness or ODS unit harness; replace the faulty harness.■



BACK

Protected by AR

## DTC 71-11: Open in Driver's Seat Position Sensor

1. Erase the DTC memory (see page 24-25).

2. Turn the ignition switch ON (II), and check that the SRS indicator comes on for about 6 seconds and then goes off.

   *Does the SRS indicator stay on, and is DTC 71-11 indicated?*

   **YES**—Go to step 3.

   **NO**—Intermittent failure, system is OK at this time. Go to Troubleshooting Intermittent Failures (see page 24-26). If another DTC is indicated, go to the DTC Troubleshooting Index.

3. Check the connection between the driver's seat wire harness 2P connector and the driver's seat position sensor (see page 24-12).

4. Erase the DTC memory.

5. Read the DTC (see page 24-24).

   *Is DTC 71-11 indicated?*

   **YES**—Go to step 6.

   **NO**—Intermittent failure, system is OK at this time. Go to Troubleshooting Intermittent Failures (see page 24-26). If another DTC is indicated, go to the DTC Troubleshooting Index.

6. Turn the ignition switch OFF. Disconnect the negative cable from the battery, and wait for 3 minutes.

7. Disconnect the driver's seat wire harness 2P connector from the driver's seat position sensor (A).

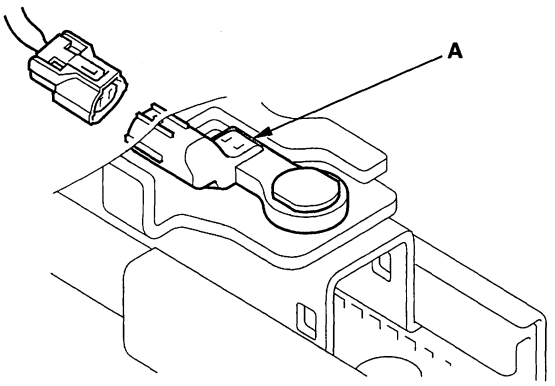


8. Connect the No. 1 and No. 2 terminals of the driver's seat wire harness 2P connector with a jumper wire.

**DRIVER'S SEAT WIRE HARNESS 2P CONNECTOR**

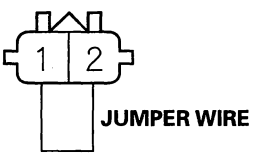


Terminal side of female terminals

9. Disconnect both seat belt tensioner connectors (see step 10 on page 24-23) and both seat belt buckle tensioner connectors (see step 11 on page 24-23).

(cont'd)

Protected by AR



## DTC Troubleshooting (cont'd)

10. Disconnect SRS unit connector B (28P) from the SRS unit (see step 14 on page 24-23).

11. Check resistance between the No. 5 and No. 6 terminals of SRS unit connector B (28P). There should be 0—1.0 Ω.

**SRS UNIT CONNECTOR B (28P)**

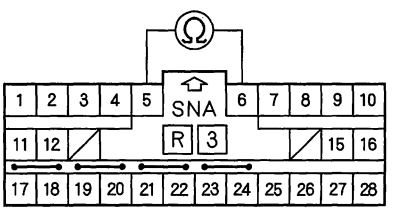


Wire side of female terminals

*Is the resistance as specified?*

**YES**—Faulty driver's seat position sensor or SRS unit; replace the driver's seat position sensor (see page 24-169). If the problem is still present, replace the SRS unit (see page 24-161).■

**NO**—Open in the SRS wire harness or the driver's seat wire harness; replace the faulty harness.■

### DTC 71-21: Short in Driver's Seat Position Sensor

1. Erase the DTC memory (see page 24-25).

2. Turn the ignition switch ON (II), and check that the SRS indicator comes on for about 6 seconds and then goes off.

   *Does the SRS indicator stay on, and is DTC 71-21 indicated?*

   **YES**—Go to step 3.

   **NO**—Intermittent failure, system is OK at this time. Go to Troubleshooting Intermittent Failures (see page 24-26). If another DTC is indicated, go to the DTC Troubleshooting Index.

3. Turn the ignition switch OFF. Disconnect the negative cable from the battery, and wait for 3 minutes.



BACK

Protected by AR

4. Disconnect the driver's seat wire harness 2P connector from the driver's seat position sensor (A) (see page 24-12).

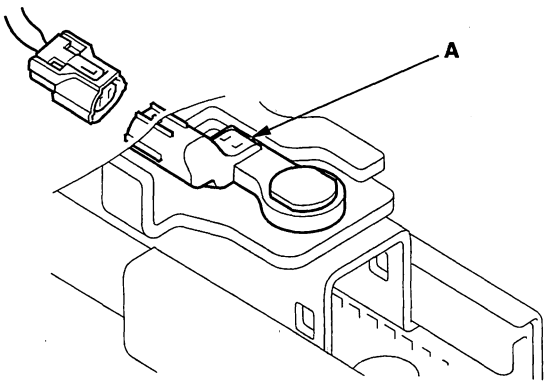


5. Reconnect the negative cable to the battery.

6. Erase the DTC memory.

7. Read the DTC (see page 24-24).

   *Is DTC 71-21 indicated?*

   **YES**—Go to step 8.

   **NO**—Faulty driver's seat position sensor; replace the driver's seat position sensor (see page 24-169). ■

8. Turn the ignition switch OFF. Disconnect the negative cable from the battery, and wait for 3 minutes.

9. Disconnect both seat belt tensioner connectors (see step 10 on page 24-23) and both seat belt buckle tensioner connectors (see step 11 on page 24-23).

10. Disconnect SRS unit connector B (28P) from the SRS unit (see step 14 on page 24-23).

11. Check resistance between the No. 5 and No. 6 terminals of SRS unit connector B (28P). There should be an open circuit or at least 1 MΩ.

**SRS UNIT CONNECTOR B (28P)**

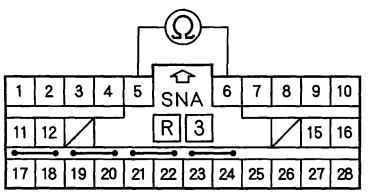


Wire side of female terminals

*Is the resistance as specified?*

**YES**—Go to step 12.

**NO**—Short in the SRS wire harness or the driver's seat wire harness; replace the faulty harness. ■

12. Check resistance between the No. 5 terminal of SRS unit connector B (28P) and body ground, and between the No. 6 terminal and body ground. There should be an open circuit or at least 1 MΩ.

**SRS UNIT CONNECTOR B (28P)**

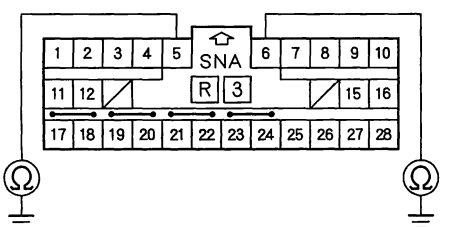


Wire side of female terminals

*Is the resistance as specified?*

**YES**—Faulty driver's seat position sensor or the SRS unit; replace the driver's seat position sensor (see page 24-169). If the problem is still present, replace the SRS unit (see page 24-161). ■

**NO**—Short to ground in the SRS wire harness or the drivers seat wire harness; replace the faulty harness. ■

Protected by AR



## DTC Troubleshooting (cont'd)

### DTC 71-22: Short to Power in Driver's Seat Position Sensor

NOTE: Use the HDS to confirm the driver's seat position before proceeding with troubleshooting (see page 24-31).

1. Erase the DTC memory (see page 24-25).

2. Turn the ignition switch ON (II), and check the SRS indicator comes on for about 6 seconds and then goes off.

   *Does the SRS indicator stay on, and is DTC 71-22 indicated?*

   **YES**—Go to step 3.

   **NO**—Intermittent failure, system is OK at this time. Go to Troubleshooting Intermittent Failures (see page 24-26). If another DTC is indicated, go to the DTC Troubleshooting Index.

3. Turn the ignition switch OFF. Disconnect the negative cable from the battery, and wait for 3 minutes.

4. Disconnect the driver's seat wire harness 2P connector from the driver's seat position sensor (A).

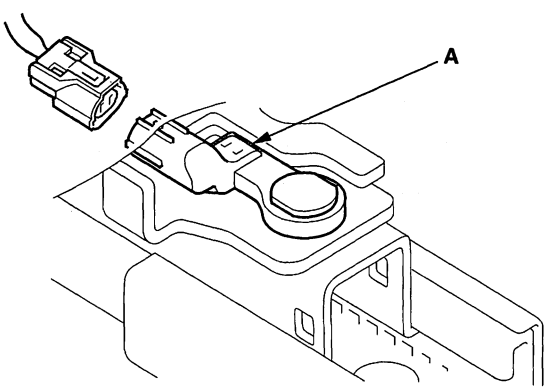


5. Disconnect both seat belt tensioner connectors (see step 10 on page 24-23) and both seat belt buckle tensioner connectors (see step 11 on page 24-23).

6. Disconnect SRS unit connector B (28P) from the SRS unit (see step 14 on page 24-23).

7. Check the voltage between the No. 5 terminal of SRS unit connector B (28P) and body ground, and between the No. 6 terminal and body ground. There should be 1 V or less.

**SRS UNIT CONNECTOR B (28P)**

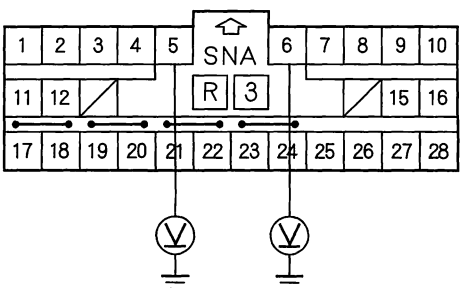


Wire side of female terminals

*Is the voltage as specified?*

**YES**—Faulty driver's seat position sensor or SRS unit; replace the driver's seat position sensor (see page 24-169). If the problem is still present, replace the SRS unit (see page 24-161). ■

**NO**—Short to power in the SRS wire harness or the driver's seat wire harness; replace the faulty harness. ■



BACK

Protected by AR

## DTC 81-61, 85-61: No Signal from ODS Unit

## DTC 81-62, 85-62: Non-stipulated Response Data

1. Make sure nothing is on the front passenger's seat.

2. Erase the DTC memory (see page 24-25).

3. Read the DTC (see page 24-24).

   *Is DTC 81-61, 85-61, 81-62, or 85-62 indicated?*

   **YES**—Go to step 4.

   **NO**—Intermittent failure, system is OK at this time. Go to Troubleshooting Intermittent Failures (see page 24-26). If another DTC is indicated, go to the DTC Troubleshooting Index.

4. Check the connection between the ODS unit harness 18P connector and the ODS unit (see step 4 on page 24-167).

   *Is the connection OK?*

   **YES**—Go to step 5.

   **NO**—Repair the poor connection and retest. If DTC 81-61, 81-62, 85-61, or 85-62 is still present, go to step 5.

5. Turn the ignition switch OFF.

6. Check the No. 9 (7.5 A) fuse in the under-dash fuse/relay box.

   *Is the fuse OK?*

   **YES**—Go to step 7.

   **NO**—Replace the fuse, then turn the ignition switch ON (II). If the fuse blows again, check for a short in the No. 9 (7.5 A) fuse circuit (dashboard wire harness, SRS wire harness, or ODS unit harness). ■

7. Disconnect the ODS unit harness 18P connector (A) from the ODS unit.

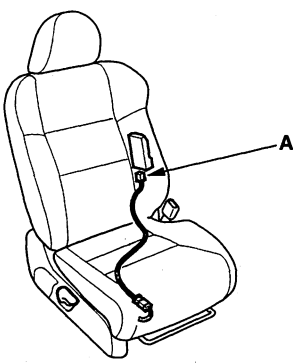


8. Turn the ignition switch ON (II).

9. Check for voltage between the No. 1 terminal of the ODS unit harness 18P connector and body ground. There should be battery voltage.

**ODS UNIT HARNESS 18P CONNECTOR**

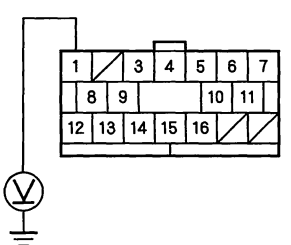


Wire side of female terminals

*Is there battery voltage?*

**YES**—Go to step 10.

**NO**—Open in the dashboard harness, SRS wire harness, or ODS unit harness; Check for poor connection at C405 and C703 (see page 22-39). If connection is OK, replace the faulty harness. ■

(cont'd)

Protected by AR



## DTC Troubleshooting (cont'd)

10. Turn the ignition switch OFF.

11. Check resistance between the No. 12 terminal of the ODS unit harness 18P connector and body ground. There should be 0—1.0 Ω.

**ODS UNIT HARNESS 18P CONNECTOR**

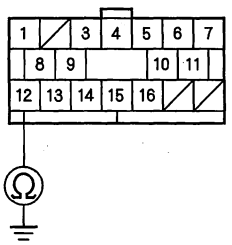


Wire side of female terminals

*Is the resistance as specified?*

**YES**—Go to step 12.

**NO**—Open in the SRS wire harness, ODS unit harness or poor ground connection at G552 (see page 22-39).

If G552 is OK, replace the faulty harness.■

12. Turn the ignition switch OFF. Disconnect the negative cable from the battery, and wait for 3 minutes.

13. Disconnect SRS unit connector A (28P) from the SRS unit (see step 14 on page 24-23).

14. Check resistance between the No. 14 terminal of SRS unit connector A (28P) and body ground. There should be an open circuit or at least 1 MΩ.

**SRS UNIT CONNECTOR A (28P)**

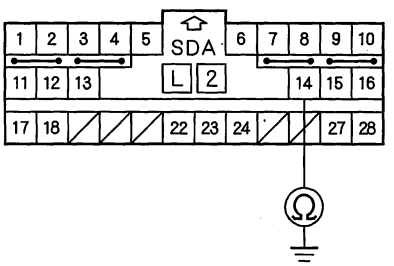


Wire side of female terminals

*Is the resistance as specified?*

**YES**—Go to step 15.

**NO**—Short to ground in the dashboard wire harness, SRS main harness, or ODS unit harness; replace the faulty harness.■



BACK

Protected by AR

15. Check resistance between the No. 14 terminal of SRS unit connector A (28P) and the No. 7 terminal of the ODS unit harness 18P connector. There should be 0—1.0 Ω.

**ODS UNIT HARNESS 18P CONNECTOR**

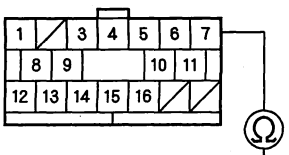


**SRS UNIT CONNECTOR A(28P)**

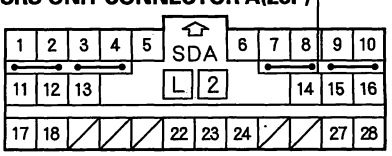


Wire side of female terminals

*Is the resistance as specified?*

**YES**—Faulty ODS unit or SRS unit; replace the ODS unit (see page 24-167). If the problem is still present, replace the SRS unit (see page 24-161). ■

**NO**—Open in the dashboard wire harness, SRS wire harness or ODS unit harness. Check for poor connection at C405 and C703 (see page 22-39). If the connection is OK, replace the faulty harness. ■

Protected by AR



## DTC Troubleshooting (cont'd)

### **DTC 81-71, 81-78:** ODS Unit does not Calibrate

1. Erase the DTC memory (see page 24-25).

2. Turn the ignition switch ON (II), and check that the SRS indicator comes on for about 6 seconds and then goes off.

   *Does the SRS indicator stay on, and is 81-71 or 81-78 indicated?*

   **YES**—Calibrate the ODS unit (see page 24-29). ■

   **NO**—Intermittent failure, system is OK at this time. Go to Troubleshooting Intermittent Failures (see page 24-26). If another DTC is indicated, go to the DTC Troubleshooting Index.

### **DTC 85-71, 85-78:** ODS Unit does not Initialized

1. Erase the DTC memory (see page 24-25).

2. Turn the ignition switch ON (II), and check that the SRS indicator comes on for about 6 seconds and then goes off.

   *Does the SRS indicator stay on, and is 85-71 or 85-78 indicated?*

   **YES**—Initialize the ODS unit (see page 24-28). ■

   **NO**—Intermittent failure, system is OK at this time. Go to Troubleshooting Intermittent Failures (see page 24-26). If another DTC is indicated, go to the DTC Troubleshooting Index.



BACK

Protected by AR

**DTC 81-4x, 81-63 ("x" can be 0 thru 9 or A thru F):** Internal Failure of the ODS Unit

**DTC 81-64:** ECU (ODS unit) Serial ID Code Inconsistent/Internal Failure of the ODS Unit

1. Erase the DTC memory (see page 24-25).

2. Turn the ignition switch ON (II), and check that the SRS indicator comes on for about 6 seconds and then goes off.

   *Does the SRS indicator stay on, and is DTC 81-4x, 81-63, or 81-64 indicated?*

   **YES**—Replace the ODS unit (see page 24-167). If the DTC returns, replace the SRS unit (see page 24-161). ■

   **NO**—Intermittent failure, system is OK at this time. Go to Troubleshooting Intermittent Failures (see page 24-26). If another DTC is indicated, go to the DTC Troubleshooting Index.

**DTC 81-79:** Front Passenger's Weight Sensors Drift Check Failure

1. Erase the DTC memory (see page 24-25).

2. Turn the ignition switch ON (II), and check that the SRS indicator comes on for about 6 seconds and then goes off.

   *Does the SRS indicator stay on, and is DTC 81-79 indicated?*

   **YES**—Go to step 3.

   **NO**—Intermittent failure, system is OK at this time. Go to Troubleshooting Intermittent Failures (see page 24-26). If another DTC is indicated, go to the DTC Troubleshooting Index.

3. Turn the ignition switch OFF.

4. Make sure nothing is on the front passenger's seat.

5. Turn the ignition switch ON (II), and check that the SRS indicator comes on for about 6 seconds and then goes off.

   *Does the SRS indicator go off?*

   **YES**—The system is OK. ■

   **NO**—Remove the front passenger's seat assembly (see page 20-118) and the front passenger's weight sensors (see page 24-165), then reinstall them. Calibrate the ODS unit (see page 24-29). Retry the troubleshooting. If DTC 81-79 is still present, replace the front passenger's weight sensors. ■

BACK

Protected by AR



## DTC Troubleshooting (cont'd)

### DTC 82-1x ("x" can be 0 thru 9 or A thru F): No Signal from the Inner Side Front Passenger's Weight Sensor

1. Erase the DTC memory (see page 24-25).

2. Turn the ignition switch ON (II), and check that the SRS indicator comes on for about 6 seconds and then goes off.

   *Does the SRS indicator stay on, and is DTC 82-1x indicated?*

   **YES**—Replace the inner side front passenger's weight sensor (see page 24-165).■

   **NO**—Intermittent failure, system is OK at this time. Go to Troubleshooting Intermittent Failures (see page 24-26). If another DTC is indicated, go to the DTC Troubleshooting Index.

### DTC 83-2x ("x" can be 0 thru 9 or A thru F): No Signal from the Outer Side Front Passenger's Weight Sensor

1. Erase the DTC memory (see page 24-25).

2. Turn the ignition switch ON (II), and check that the SRS indicator comes on for about 6 seconds and then goes off.

   *Does the SRS indicator stay on, and is DTC 83-2x indicated?*

   **YES**—Replace the outer front passenger's weight sensor (see page 24-165).■

   **NO**—Intermittent failure, system is OK at this time. Go to Troubleshooting Intermittent Failures (see page 24-26). If another DTC is indicated, go to the DTC Troubleshooting Index.



BACK

Protected by AR

## DTC 85-4x, 85-64 ("x" can be 0 thru 9 or A thru F): Internal Failure of the ODS Unit

## DTC 85-63: ECU (ODS Unit) Serial ID Code Inconsistent/Internal Failure of the ODS Unit

NOTE: An incorrect ODS unit can cause DTC 85-63.

1. Erase the DTC memory (see page 24-25).

2. Turn the ignition switch ON (II), and check that the SRS indicator comes on for about 6 seconds and then goes off.

   *Does the SRS indicator stay on, and is DTC85-4x, 85-63, or 85-64 indicated?*

   **YES**—Go to step 3.

   **NO**—Intermittent failure, system is OK at this time. Go to Troubleshooting Intermittent Failures (see page 24-26). If another DTC is indicated, go to the DTC Troubleshooting Index.

3. Initialize the ODS unit (see page 24-28).

4. Turn the ignition switch ON (II), and check that the SRS indicator comes on for about 6 seconds and then goes off.

   *Does the SRS indicator go off?*

   **YES**—The system is OK.■

   **NO**—Replace the ODS unit (see page 24-167) and retest.■

## DTC 85-79: OPDS Sensor Drift Check Failure

1. Erase the DTC memory (see page 24-25).

2. Turn the ignition switch ON (II), and check that the SRS indicator comes on for about 6 seconds and then goes off.

   *Does the SRS indicator stay on, and is DTC 85-79 indicated?*

   **YES**—Turn the ignition switch OFF, and go to step 3.

   **NO**—Intermittent failure, system is OK at this time. Go to Troubleshooting Intermittent Failures (see page 24-26). If another DTC is indicated, go to the DTC Troubleshooting Index.

3. Make sure nothing is on the front passenger's seat.

4. Turn the ignition switch ON (II), and check that the SRS indicator comes on for about 6 seconds and then goes off.

   *Does the SRS indicator go off?*

   **YES**—The system is OK.■

   **NO**—Go to step 5.

5. Initialize the ODS unit (see page 24-28).

6. Turn the ignition switch ON (II), and check that the SRS indicator comes on for about 6 seconds and then goes off.

   *Does the SRS indicator go off?*

   **YES**—The system is OK.■

   **NO**—Replace the ODS unit (see page 24-167) and retest. If the problem is still present, replace the OPDS sensor/seat-back (see page 20-126).■

BACK

Protected by AR



## DTC Troubleshooting (cont'd)

**DTC 86-1x ("x" can be 0 thru 9 or A thru F):**
Faulty OPDS Seat-back Sensor

**DTC 86-2x ("x" can be 0 thru 9 or A thru F):**
Faulty OPDS Seat Support Sensor

1. Erase the DTC memory (see page 24-25).

2. Turn the ignition switch ON (II), and check that the SRS indicator comes on for about 6 seconds and then goes off.

   *Does the SRS indicator stay on, and is DTC 86-1x or 86-2x indicated?*

   **YES**—Go to step 3.

   **NO**—Intermittent failure, system is OK at this time. Go to Troubleshooting Intermittent Failures (see page 24-26). If another DTC is indicated, go to the DTC Troubleshooting Index.

   NOTE: Aftermarket devices (fluorescent lights, laptop computers, etc.) used near the front passenger's seat-back can interfere with the seat-back sensors and cause a false DTC 86-1x or 86-2x. If one of these devices was used, erase the DTC, operate the device near the seat-back, and recheck for DTCs. If DTC 86-1x or 86-2x is set, erase it, and do not use the device near the seat-back.

3. Check the connection at the OPDS sensor harness connectors (A) and the ODS unit connector (B).

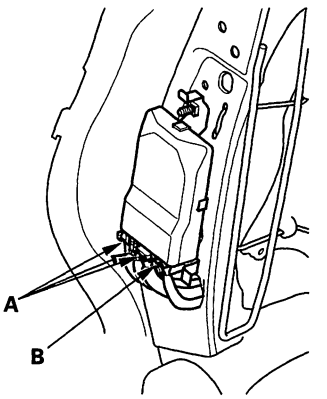


   *Is the connection OK?*

   **YES**—Go to step 4.

   **NO**—Repair the poor connection, and clear the DTC. ■

4. Replace the OPDS sensor/seat-back foam (see page 20-126), and initialize the ODS (see page 24-28).

5. Erase the DTC memory, then check for DTC 86-1x or 86-2x.

   *Is DTC 86-1x or 86-2x indicated?*

   **YES**—Replace the ODS unit (see page 24-167). ■

   **NO**—The system is OK. ■



BACK

Protected by AR

## DTC 92-11: Short to Power in the Passenger's Airbag Cutoff Indicator

NOTE: Information marked with an asterisk ( * ) applies to models with the navigation system.

1. Erase the DTC memory (see page 24-25).

2. Turn the ignition switch ON (II), and check that the SRS indicator comes on for about 6 seconds and then goes off.

   *Does the SRS indicator stay on, and is DTC 92-11 indicated?*

   **YES**—Go to step 3.

   **NO**—Intermittent failure, system is OK at this time. Go to Troubleshooting Intermittent Failures (see page 24-26). If another DTC is indicated, go to the DTC Troubleshooting Index.

3. Disconnect the audio display panel 20P connector A, or *navigation switch panel 6P connector B (see page 20-101).

4. Turn the ignition switch OFF. Disconnect the negative cable from the battery, and wait for 3 minutes.

5. Disconnect SRS unit connector A (28P) from the SRS unit (see step 14 on page 24-23).

6. Reconnect the negative cable to the battery.

7. Turn the ignition switch ON (II).

8. Check for voltage between the No. 13 terminal of SRS unit connector A (28P) and body ground. There should be 0.5 V or less.

**SRS UNIT CONNECTOR A (28P)**

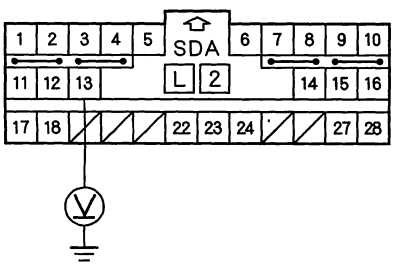


Wire side of female terminals

*Is the voltage as specified?*

**YES**—Faulty SRS unit or passenger's airbag cutoff indicator; replace the passenger's airbag cutoff indicator. If the problem is still present, replace the SRS unit (see page 24-161).■

**NO**—Short to power in the dashboard wire harness; replace the dashboard wire harness.■

BACK

Protected by AR



## DTC Troubleshooting (cont'd)

### DTC 92-21: Open or Short to Ground in the Passenger's Airbag Cutoff Indicator

NOTE: Information marked with an asterisk ( * ) applies to models with the navigation system.

1. Erase the DTC memory (see page 24-25).

2. Turn the ignition switch ON (II), and check that the SRS indicator comes on for about 6 seconds and then goes off.

   *Does the SRS indicator stay on, and DTC 92-21 indicated?*

   **YES**—Go to step 3.

   **NO**—Intermittent failure, system is OK at this time. Go to Troubleshooting Intermittent Failures (see page 24-26). If another DTC is indicated, go to the DTC Troubleshooting Index.

3. Disconnect the audio display panel 20P connector A, or *navigation switch panel 6P connector B (see page 20-101).

4. Turn the ignition switch OFF. Disconnect the negative cable from the battery, and wait for 3 minutes.

5. Disconnect SRS unit connector A (28P) from the SRS unit (see step 14 on page 24-23).

6. Check resistance between the No. 1* or No. 17 terminal of the switch panel 6P* or 20P connector and the No. 13 terminal of SRS unit connector A (28P). There should be 0—1.0 Ω.

   **With NAVI:**

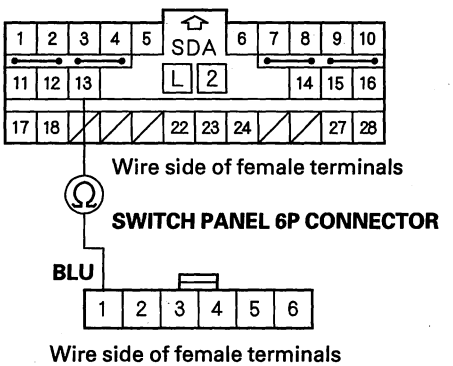


   **Without NAVI:**

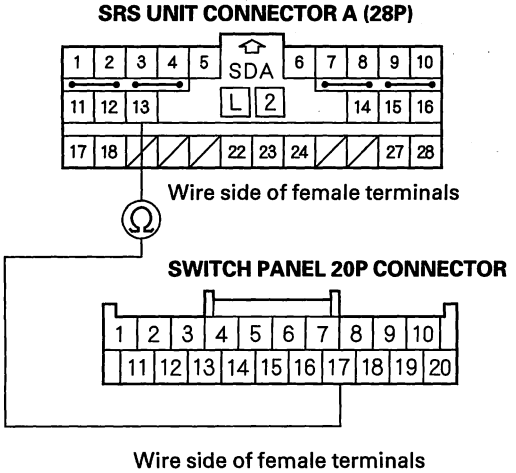


   *Is the resistance as specified?*

   **YES**—Go to step 7.

   **NO**—Open in the dashboard wire harness; replace the dashboard wire harness.■



BACK

Protected by AR

7. Check resistance between the No. 13 terminal of the SRS unit connector A (28P) and body ground. There should be an open circuit or at least 1 MΩ.

**SRS UNIT CONNECTOR A (28P)**

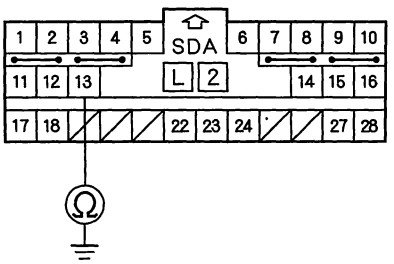


Wire side of female terminals

*Is the resistance as specified?*

**YES**—Replace the passenger's airbag cutoff indicator. If the problem is still present, replace the SRS unit (see page 24-161). ■

**NO**—Short to ground in the dashboard wire harness; replace the dashboard wire harness. ■

Protected by AR



## DTC Troubleshooting (cont'd)

### DTC A1-11: Faulty Power Supply (VA Line)

1. Erase the DTC memory (see page 24-25).

2. Turn the ignition switch ON (II), and check that the SRS indicator comes on for about 6 seconds and then goes off.

3. Read the DTC (see page 24-24).

   *Is DTC A1-11 indicated?*

   **YES**—Go to step 4.

   **NO**—Intermittent failure, system is OK at this time. Go to Troubleshooting Intermittent Failures (see page 24-26). If another DTC is indicated, go to the DTC Troubleshooting Index.

4. Turn the ignition switch OFF.

5. Check the No. 9 (7.5 A) fuse in the under-dash fuse/relay box.

   *Is the fuse OK?*

   **YES**—Go to step 6.

   **NO**—Replace the fuse, then turn the ignition switch ON (II). If the fuse blows again, check for a short in the No. 9 (7.5 A) fuse circuit (dashboard wire harness, SRS wire harness, or ODS unit harness). ■

6. Disconnect the negative cable from the battery, and wait for 3 minutes.

7. Disconnect the SRS unit connector A (28P) from the SRS unit (see step 14 on page 24-23).

8. Reconnect the negative cable to the battery.

9. Connect a voltmeter between the No. 17 terminal of SRS unit connector A (28P) and body ground. Turn the ignition switch ON (II), and measure voltage. There should be battery voltage when the ignition is on.

**SRS UNIT CONNECTOR A (28P)**

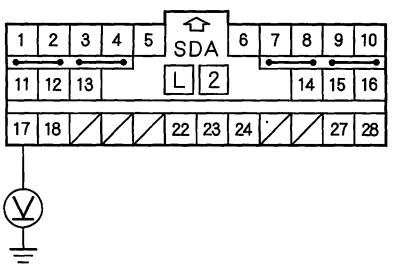


Wire side of female terminals

*Is there battery voltage?*

**YES**—Faulty SRS unit or poor connection at SRS unit connector (A) 28P and the SRS unit. Check the connection between the connector and the SRS unit. If the connection is OK, replace the SRS unit (see page 24-161). ■

**NO**—Go to step 10.



BACK

Protected by AR

10. Turn the ignition switch OFF.

11. Disconnect under-dash fuse/relay box connector O (4P).

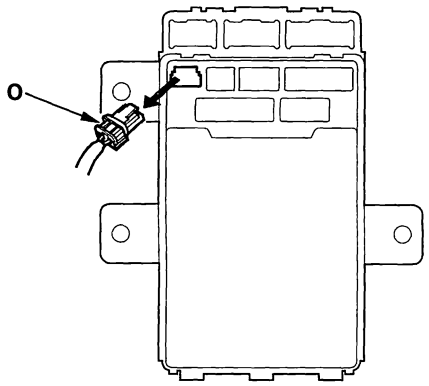


12. Check resistance between the No. 4 terminal of under-dash fuse/relay box connector O (4P) and the No. 17 terminal of SRS unit connector A (28P). There should be 0—1.0 Ω.

**UNDER-DASH FUSE/RELAY BOX CONNECTOR O (4P)** **SRS UNIT CONNECTOR A (28P)**

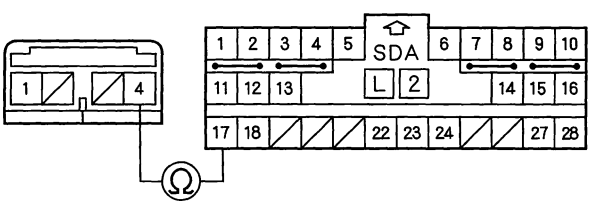


Wire side of female terminals

*Is the resistance as specified?*

**YES**—Open in the under-dash fuse/relay box or poor contact between connector O (4P) and the under-dash fuse/relay box; check the connection. If the connection is OK, replace the under-dash fuse/relay box (see page 22-62). ■

**NO**—Open in the dashboard wire harness; replace the dashboard wire harness. ■

## DTC A2-11: Faulty Power Supply (VB Line)

1. Check the No. 11 (10 A) fuse in the under-dash fuse/relay box.

*Is the fuse OK?*

**YES**—Go to step 2.

**NO**—Replace the fuse, then turn the ignition switch ON (II). If the fuse blows again, check for a Short to ground in the dashboard wire harness or in the under-dash fuse/relay box No. 11 (10 A) fuse circuit; replace the dashboard wire harness. If the problem is still there, replace the under-dash fuse/relay box (see page 22-62). ■

(cont'd)

Protected by AR



## DTC Troubleshooting (cont'd)

2. Turn the ignition switch OFF. Disconnect the negative cable from the battery, and wait for 3 minutes.

3. Disconnect SRS unit connector A (28P) from the SRS unit (see step 14 on page 24-23).

4. Reconnect the negative cable to the battery.

5. Connect a voltmeter between the No. 18 terminal of SRS unit connector A (28P) and body ground. Turn the ignition switch ON (II), and measure voltage. There should be battery voltage when the ignition on.

**SRS UNIT CONNECTOR A (28P)**

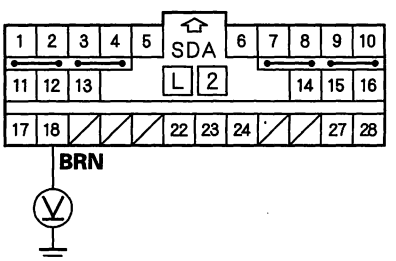


Wire side of female terminals

*Is there battery voltage?*

**YES**—Faulty SRS unit or poor connection at SRS unit connector A (28P) and the SRS unit; check the connection. If the connection is OK, replace the SRS unit (see page 24-161).■

**NO**—Go to step 6.

6. Turn the ignition switch OFF.

7. Disconnect under-dash fuse/relay box connector O (4P).

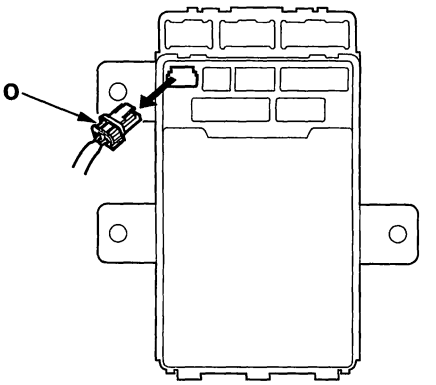


8. Check resistance between the No. 1 terminal of the under-dash fuse/relay box connector O (4P) and the No. 18 terminal of SRS unit connector A (28P). There should be 0—1.0 Ω.

**UNDER-DASH FUSE/RELAY BOX CONNECTOR O (4P)** **SRS UNIT CONNECTOR A (28P)**

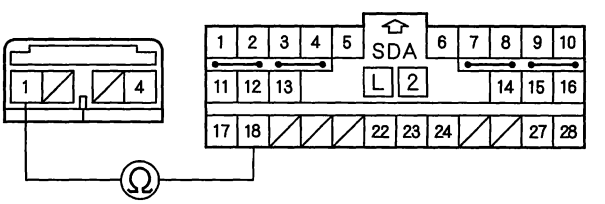


Wire side of female terminals

*Is the resistance as specified?*

**YES**—Open in the under-dash fuse/relay box or poor connection between connector O (4P) and the under-dash fuse/relay box; check the connection. If the connection is OK, replace the under-dash fuse/relay box (see page 22-62).■

**NO**—Open in the dashboard wire harness; replace the dashboard wire harness.■



BACK

Protected by AR

## DTC B1-11: No Signal from the Roll Rate Sensor

**Special Tools Required**
- SRS inflator simulator 07SAZ-TB4011A
- SRS simulator lead L 070AZ-SNAA300

1. Erase the DTC memory (see page 24-25).

2. Turn the ignition switch ON (II), and check that the SRS indicator comes on for about 6 seconds and then goes off.

   *Does the SRS indicator stay on, and is DTC B1-11 indicated?*

   **YES**—Go to step 3.

   **NO**—Intermittent failure, system is OK at this time. Go to Troubleshooting Intermittent Failures (see page 24-26). If another DTC is indicated, go to the DTC Troubleshooting Index.

3. Turn the ignition switch OFF. Disconnect the negative cable from the battery, and wait for 3 minutes.

4. Check the connections between the SRS wire harness 2P connector and the roll rate sensor (see page 24-12).

   *Is the connection OK?*

   **YES**—Go to step 5.

   **NO**—Repair the poor connection and retest. If the DTC B1-11 is still present, go to step 5.

5. Disconnect the SRS wire harness 2P connector (A) from the roll rate sensor.

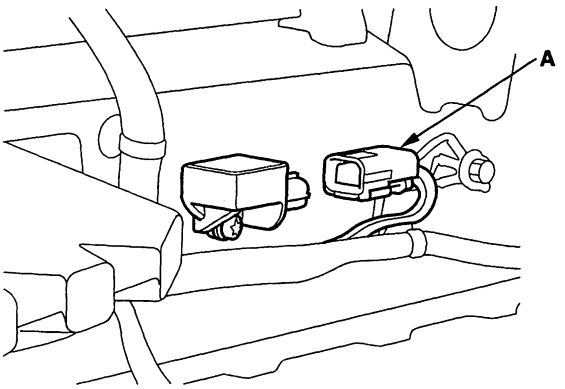


6. Disconnect SRS unit connector C (28P) from the SRS unit (see step 14 on page 24-23).

7. Check resistance between the No. 4 and No. 8 terminals of SRS unit connector C (16P). There should be an open circuit or at least 1 MΩ.

**SRS UNIT CONNECTOR C(16P)**

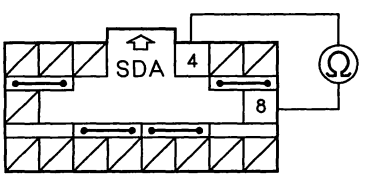


Wire side of female terminals

*Is the resistance as specified?*

**YES**—Go to step 8.

**NO**—Short in the SRS wire harness; replace the SRS wire harness. ■

(cont'd)

Protected by AR



## DTC Troubleshooting (cont'd)

8. Check resistance between the No. 4 terminal of SRS unit connector C (16P) and body ground, and between the No. 8 terminal and body ground. There should be an open circuit or at least 1 MΩ.

**SRS UNIT CONNECTOR C(16P)**

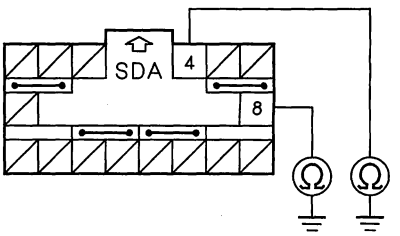


Wire side of female terminals

*Is the resistance as specified?*

**YES**—Go to step 9.

**NO**—Short to ground in the SRS wire harness; replace the SRS wire harness.■

9. Reconnect the battery negative cable.

10. Turn the ignition switch ON (II).

11. Check for voltage between the No. 4 terminal of SRS unit connector C (16P) and body ground, and between the No. 8 terminal and body ground. There should be 1 V or less.

**SRS UNIT CONNECTOR C(16P)**

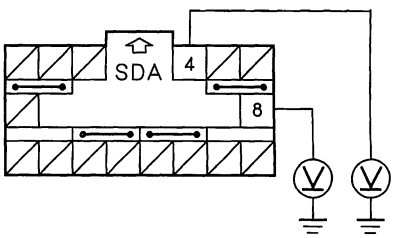


Wire side of female terminals

*Is the voltage as specified?*

**YES**—Go to step 12.

**NO**—Short to power in the SRS wire harness; replace the SRS wire harness.■

12. Turn the ignition switch OFF.

13. Connect the SRS inflator simulator (jumper connector) and the black lead (A) of simulator lead L to the SRS wire harness 2P connector (B).

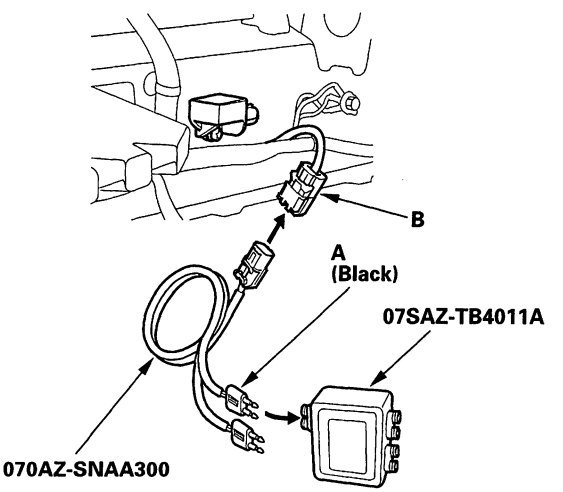




BACK

Protected by AR

14. Check resistance between the No. 4 and No. 8 terminals of SRS unit connector C (16P). There should be 0—1.0 Ω or less.

**SRS UNIT CONNECTOR C(16P)**

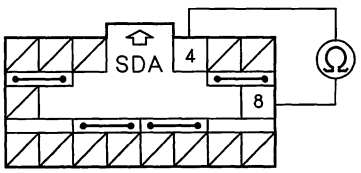


Wire side of female terminals

*Is the resistance as specified?*

**YES**—Faulty roll rate sensor or SRS unit; replace the roll rate sensor (see page 24-164). If the problem is still present, replace the SRS unit (see page 24-161).■

**NO**—Open in the SRS wire harness; replace the SRS wire harness.■

## DTC B1-21, B1-81, B1-91, B1-A1, B1-B1, B1-B2: Internal Failure of the Roll Rate Sensor

1. Erase the DTC memory (see page 24-25).

2. Turn the ignition switch ON (II), and check that the SRS indicator comes on for about 6 seconds and then goes off.

   *Does the SRS indicator stay on, and is B1-21, B1-81, B1-91, B1-A1, B1-B1, or B1-B2 indicated?*

   **YES**—Replace the roll rate sensor (see page 24-164). If the DTC returns, replace the SRS unit (see page 24-161).■

   **NO**—Intermittent failure, system is OK at this time. Go to Troubleshooting Intermittent Failures (see page 24-26). If another DTC is indicated, go to the DTC Troubleshooting Index.

Protected by AR



## Symptom Troubleshooting

### SRS indicator does not come on

1. Connect the HDS to the DLC (see page 24-24).
2. Turn the ignition switch ON (II).
3. Make sure the HDS communicates with the vehicle and the SRS unit. If it does not communicate, troubleshoot the DLC circuit (see page 11-229).
4. Check for PGM-FI, Body Electrical, and SRS DTCs with the HDS.

   *Are there any PGM-FI, Body Electricl, or SRS DTCs?*

   **YES**—Go to the indicated DTCs troubleshooting.

   **NO**—Go to step 5.
5. Do the gauge control module self-diagnostic function (see page 22-258).

   *Does the SRS indicator come on?*

   **YES**—Faulty SRS unit; replace the SRS unit (see page 24-161).■

   **NO**—Faulty gauge control module; replace the gauge control module (see page 22-284).■

### SRS indicator stays on, but no DTCs are stored

1. Connect the HDS to the DLC (see page 24-24).
2. Turn the ignition switch ON (II).
3. Make sure the HDS communicates with the vehicle. If it does not communicate, troubleshoot the DLC circuit (see page 11-229).
4. Select Body Electrical status with the HDS.
5. Check the DTCs in the Gauge Menu with the HDS.

   *Is DTC B1187 indicated?*

   **YES**—Go to the DTC B1187 troubleshooting (see page 22-280).

   **NO**—Go to step 6.
6. Check that the HDS communicates with the SRS unit.

   *Does the HDS communicate with the SRS unit?*

   **YES**—Go to step 7.

   **NO**—If the HDS does not communicate with the SRS unit, check for power and ground at SRS unit connector A. If power and ground are still present, replace the SRS unit (see page 24-161).■
7. From the HDS System Menu, select SRS, then SRS in Mode Menu, PARAMETER INFORMATION, then SCS, MES, Indicator. Read the current status of the SRS indicator.

   *Is the status ON?*

   **YES**—Faulty SRS unit; replace the SRS unit (see page 24-161).■

   **NO**—Faulty gauge control module; replace the gauge control module (see page 22-284).■



BACK

Protected by AR

## Side airbag cutoff indicator stays on or is flashing

1. Make sure nothing is on the front passenger's seat.

2. Make sure the seat-back is dry.

3. Turn the ignition switch ON (II), and see if the SRS indicator comes on.

   *Does the SRS indicator come on?*

   **YES**—Go to the Symptom Troubleshooting "SRS indicator stay on, but no DTCs are stored."

   **NO**—Go to step 4.

4. Connect the HDS to the DLC (see page 24-24).

5. Make sure the HDS communicates with the vehicle and the SRS unit. If it does not troubleshoot the DLC circuit (see page 11-229).

6. From the Main Menu on the HDS, select SRS, then PARAMETER INFORMATION. In the PARAMETER INFORMATION Menu, select "SCS, MES, Indicator," and read the what is indicated on the HDS.

   *Is OFF indicated on the HDS?*

   **YES**—Go to the gauge control module troubleshooting (see page 22-258). ■

   **NO**—Faulty SRS unit; replace the SRS unit (see page 24-161). ■

## Side airbag cutoff indicator does not come on

NOTE: If the SRS indicator also stays on, go to SRS indicator stays on, but no DTCs are stored (see page 24-140).

1. Turn the ignition switch ON (II), and check that the side airbag cutoff indicator comes on for about 6 seconds.

   *Does the side airbag cutoff indicator come on?*

   **YES**—Go to the Symptom Troubleshooting "SRS indicator stay on."

   **NO**—Go to step 2.

2. Connect the HDS to the DLC (see page 24-24).

3. Make sure the HDS communicates with the vehicle and the SRS unit. If it does not troubleshoot the DLC circuit (see page 11-229).

4. Do the self diagnostic function with the HDS.

   *Does the side airbag cutoff indicator come on?*

   **YES**—Faulty SRS unit; replace the SRS unit (see page 24-161). ■

   **NO**—Faulty gauge control module; replace the gauge control module (see page 22-284). ■

Protected by AR



## Symptom Troubleshooting (cont'd)

### Passenger's airbag cutoff indicator stays on or comes on suddenly

NOTE: Under the following conditions, the passenger's airbag cutoff indicator stays on or comes on suddenry.

- No one is sitting the front passenger's seat, but there is an object on the seat more than 5 kg (11 lbs).
- The seat belt is buckled, but no one is sitting on the front passenger's seat.
- Someone who is less than 30 kg (66 lbs) is sitting on the front passenger's seat.
- Someone who is more than 30 kg (66 lbs) but is supporting some of their body weight on their legs, feet, arms, or hands.

1. Check for these items, then recheck the passenger's airbag cutoff indicator.

   - The front passenger's seat is/was installed correctly.
   - Nothing is/was on the front passenger's seat.
   - Nothing is/was under the front passenger's seat.
   - Nothing is/was in the front passenger's seat-back pocket.
   - Whoever was sitting on the passenger's seat was sitting in the proper sitting position.

   *Does the passenger's airbag cutoff indicator stay on?*

   **YES**—Go to step 2.

   **NO**—Troubleshooting is complete.■

2. Connect the HDS to the DLC (see page 24-24).

3. Turn the ignition switch ON (II).

4. Make sure the HDS communicates with the vehicle and the SRS unit. If it does not communicate, troubleshoot the DLC circuit (see page 11-229).

5. Select the INSPECTION menu on the HDS, then select AFTER REPLACING FRONT PASSENGER'S SEAT COMPONENT(S), and follows the prompts.

   *Does the passenger's airbag cutoff indicator stay on?*

   **YES**—Go to step 6.

   **NO**—Troubleshooting is complete.■

6. Select the INSPECTION menu on the HDS, then select AFTER A VEHICLE COLISION, and follows the prompts.

   *Does the passenger's airbag cutoff indicator stay on?*

   **YES**—Replace the SRS unit (see page 24-161).■

   **NO**—Troubleshooting is complete.■



BACK

Protected by AR

## Component Replacement/Inspection After Deployment

NOTE:
- Before doing any SRS repairs, use the HDS SRS menu method to check for DTCs.
- Check the front passenger's weight sensors after a vehicle collision (see page 24-27).
- After a vehicle collision, do the ODS unit operation check (see page 24-30).

After a collision where the seat belt tensioners deployed, replace these items:
- SRS unit
- Seat belt tensioners
- Seat belt buckle tensioners
- Front impact sensors

After a collision where the front airbag(s) deployed, replace these items:
- SRS unit
- Deployed airbag(s)
- Seat belt tensioners
- Seat belt buckle tensioners
- Front impact sensors

After a collision where the side airbag(s) deployed, replace these items:
- SRS unit
- Deployed side airbag(s)
- Side impact sensor(s) (first) for the side(s) that deployed
- Side impact sensor(s) (second) for the side(s) that deployed
- B-pillar lower trim
- Complete seat frame
- Side airbag bracket

After a collision where the side curtain airbag(s) deployed, replace these items:
- SRS unit
- Deployed side curtain airbag(s)
- Seat belt tensioner(s) for the side(s) that deployed
- Side impact sensor(s) (first) for the side(s) that deployed
- Side impact sensor(s) (second) for the side(s) that deployed
- Roll rate sensor
- Roof trim
- A-pillar trim
- B-pillar lower trim
- C-pillar trim
- Front grab handle
- Rear grab handle
- All related trim clips
- Sunvisor

After a moderate to severe side or rear collision, inspect for any damage on the side curtain airbag or other related components. Replace components as needed.

**A-pillar trim**

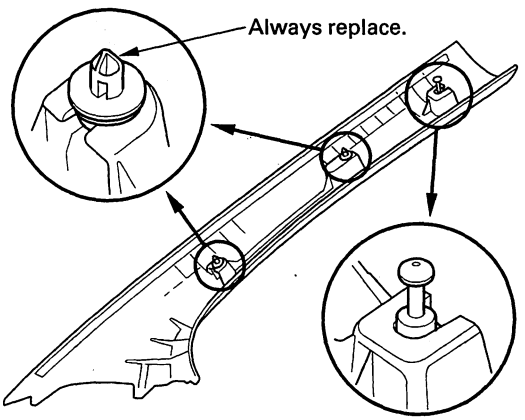


**B-pillar trim**

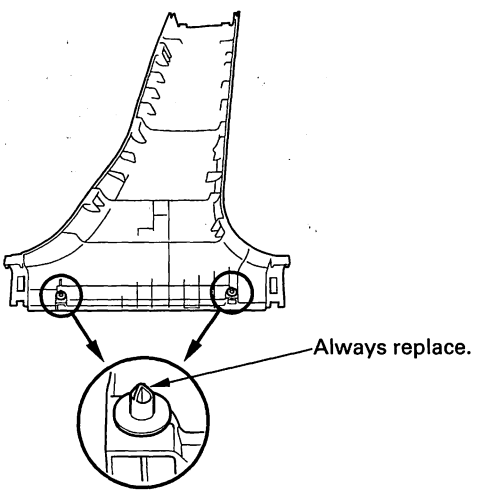


(cont'd)

Protected by AR



## Component Replacement/Inspection After Deployment (cont'd)

**C-Pillar trim**

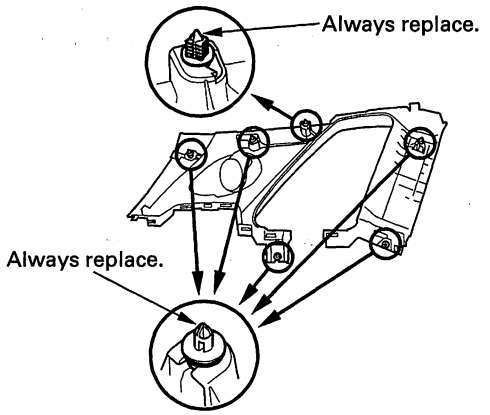


During the repair process, inspect these areas:
- Inspect all the SRS wire harnesses. Replace, do not repair, any damaged harnesses.
- Inspect the cable reel for heat damage. If there is any damage, replace the cable reel.

After the vehicle is completely repaired, turn the ignition switch ON (II). If the SRS indicator comes on for about 6 seconds and then goes off, the SRS is OK. If the indicator does not function properly, use the HDS SRS Menu Method to read the DTC (see page 24-24). If you cannot retrieve a code, go to SRS Symptom Troubleshooting (see page 24-140).

### Checking and Adjusting the Headliner/Pillar Trim Overlap

To prevent the side curtain airbag from deploying and damaging the pillar trim, the overlap between the headliner and pillar trim must be less then 0.3 in. (8 mm). To check the overlap, do this:

1. Install the headliner (A) and the pillar trims (B).

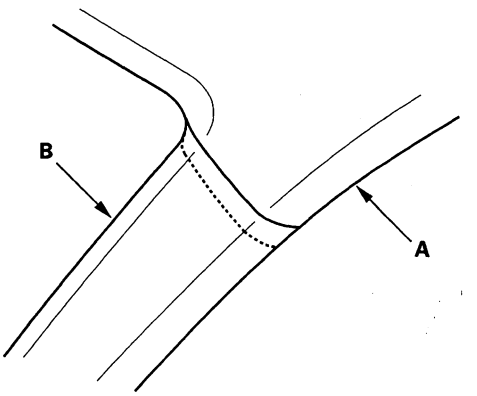


2. Using masking tape on the headliner, mark the upper edge of each pillar trim.

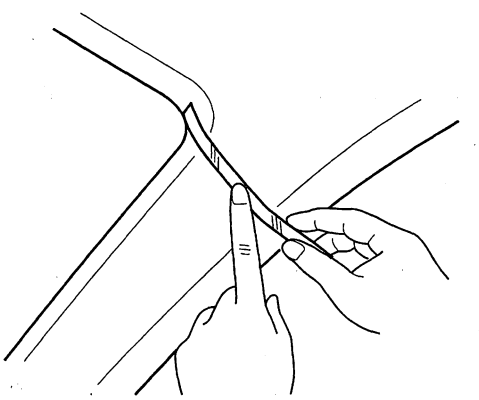



BACK

Protected by AR

3. Remove the pillar trim, and measure the headliner overlap.

   - If the overlap is less than 0.3 in. (8 mm), remove the tape, and install the pillar trim.
   - If the overlap is more than 0.3 in. (8 mm), go to step 4.

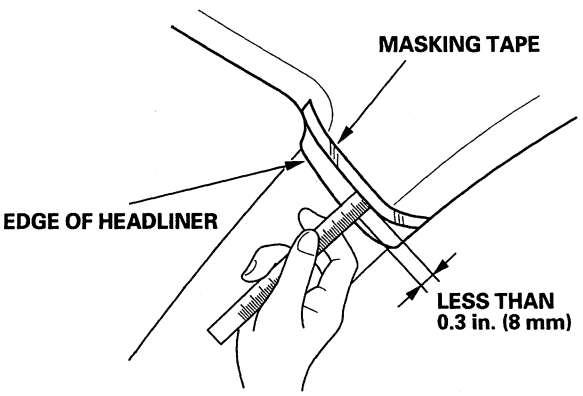


4. Carefully trim the headliner with a utility knife, reducing the overlap to less than 0.3 in. (8 mm).

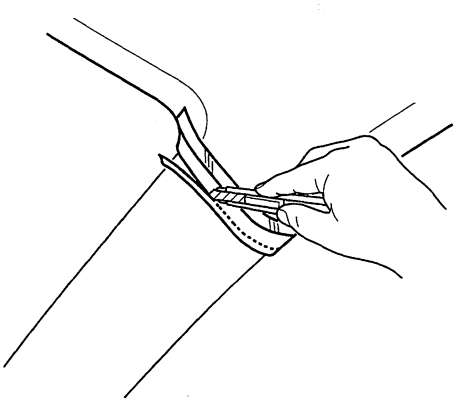

5. Remove the tape, and install the pillar trim.

Protected by AR



## Driver's Airbag Replacement

### Removal

1. Disconnect the negative cable from the battery and wait at least 3 minutes before beginning work.

2. Remove the access panel (A) from the steering wheel, then disconnect the driver's airbag 4P connector (B) from the cable reel.

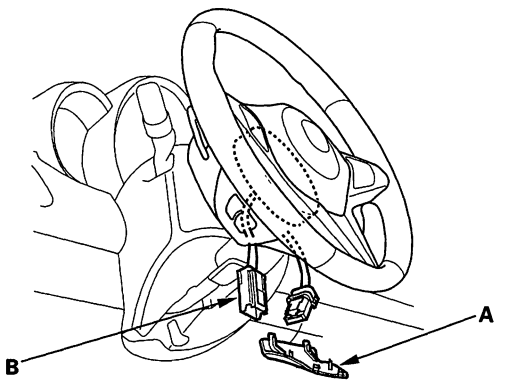


3. Using a TORX T30 bit, remove the two TORX bolts (A) and discard them.

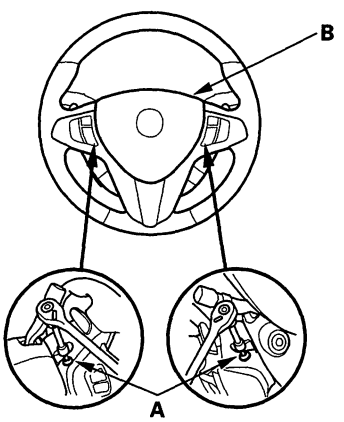


4. Disconnect the horn switch connector (1P), then remove the driver's airbag (B).

### Installation

1. Connect the horn switch connector (1P) (A) to the driver's airbag.

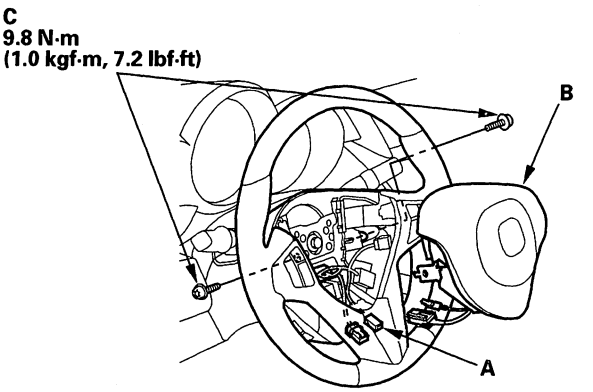


2. Place the new driver's airbag (B) in the steering wheel, and secure it with new TORX bolts (C).

3. Connect the cable reel 4P connector (A) to the driver's airbag 4P connector, then install the access panel (B) on the steering wheel.

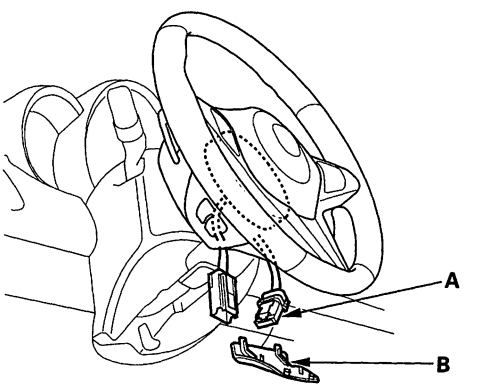


4. Connect the negative cable from the battery.

5. After installing the airbag, confirm proper system operation:

   - Turn the ignition switch ON (II); the SRS indicator should come on for about 6 seconds and then go off.
   - Make sure the horn works.



BACK

Protected by AR

## Front Passenger's Airbag Replacement

1. Disconnect the negative cable from the battery, and wait at least 3 minutes before beginning work.

2. Remove the glove box (see page 20-104).

3. Disconnect the dashboard wire harness 4P connector (A) from the front passenger's airbag, then remove the three nuts (B).

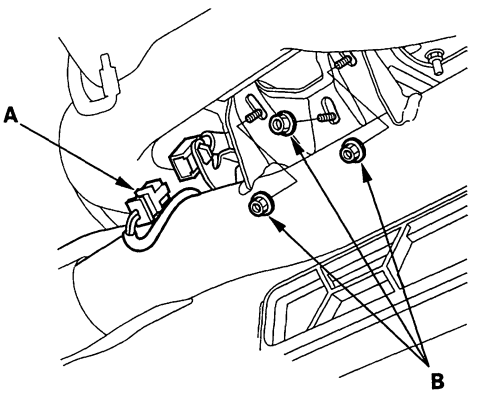


4. Remove the dashboard upper panel/front passenger's airbag assembly (see page 20-106). If you are replacing a deployed airbag, go to step 6 to install a new airbag and a new dashboard upper panel.

5. Cut the four parts of the lid as shown (A), and detach the front passenger's airbag.

   NOTE:
   - Always replace the upper dashboard panel whenever you remove the airbag from the panel.
   - Replace the airbag if the airbag mounting hooks or its housing is damaged.

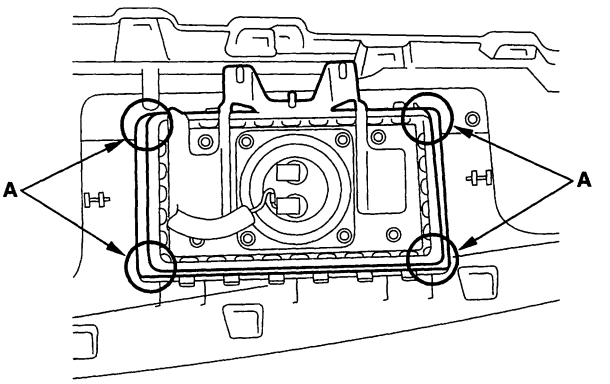


6. Insert the hooks (A) of the front passenger's airbag housing into the new upper dashboard panel, then insert the other hooks (B) into the panel.

   NOTE:
   - Make sure there are no objects between the airbag and the upper panel.
   - Make sure the airbag is fully seated, and make sure the upper panel is not deformed or damaged after the airbag is in place.
   - Do not use tools when detaching the front passenger's airbag in order to protect it.

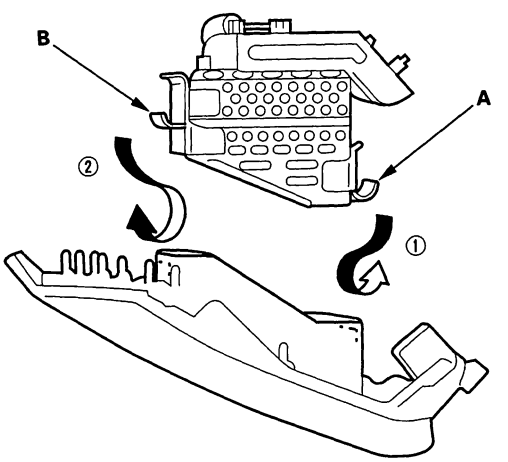


(cont'd)

Protected by AR



## Front Passenger's Airbag Replacement (cont'd)

7. Reinstall the dashboard upper panel/front passenger's airbag assembly (see page 20-106).

8. Install the three mounting nuts (A) to secure the airbag.

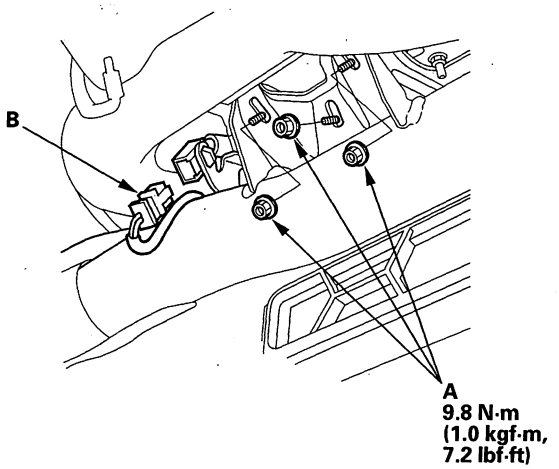


9. Reconnect the dashboard wire harness 4P connector (B) to the front passenger's airbag connector.

10. Reinstall the glove box (see page 20-104).

11. Reconnect the negative cable to the battery.

12. After installing the airbag, confirm proper system operation: Turn the ignition switch ON (II); the SRS indicator should come on for about 6 seconds and then go off.



BACK

Protected by AR

# Side Airbag Replacement

NOTE:
- Review the seat replacement procedure before doing repairs or service (see page 20-118).
- If the side airbag deployed, replace the seat frame (see page 20-121).

## Removal

1. Disconnect the negative cable from the battery, and wait at least 3 minutes before beginning work.

2. Disconnect the side airbag harness 2P connector (A).

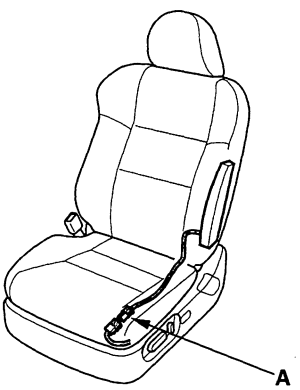


3. Remove the seat assembly (see page 20-118) and seat-back cover (see page 20-126).

4. Remove the TORX bolts (A) and mounting nut (B), then remove the side airbag (C) and side airbag bracket (D).

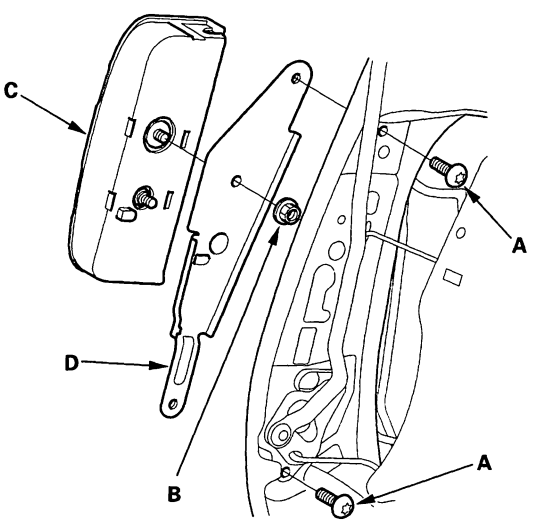


## Installation

NOTE:
- If the side airbag lid is secured by tape, remove the tape.
- Do not open the lid of the side airbag cover.
- Use new mounting bolts tightened to the specified torque. When you replace a side airbag, make sure that the seat-back cover is installed properly. Improper installation may prevent proper deployment.
- Be sure to install the harness wires so that they are not pinched or interfering with other parts.

1. Place the new side airbag and the side airbag module bracket on the seat-back frame (A). Tighten the side airbag mounting nut (B) and TORX bolt (C).

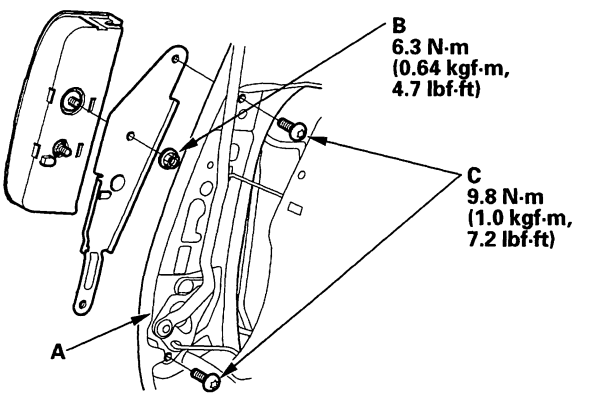


2. Install the seat-back cover in the reverse order of removal (see page 20-126).

3. Install the seat assembly (see page 20-118), then connect the side airbag harness 2P connector.

4. Move the front seat and the seat-back through their full ranges of movement, making sure the harness wires are not pinched or interfering with other parts.

5. Reconnect the negative cable to the battery.

6. After installing the side airbag, confirm proper system operation: Turn the ignition switch ON (II); the SRS indicator should come on for about 6 seconds and then go off.

Protected by AR



## Side Curtain Airbag Replacement

### Removal

NOTE:
- Review the interior trim replacement procedure before performing repair or service (see page 20-69).
- Removal of the side curtain airbag must be performed according to the precautions/procedures described at the beginning of the SRS section (see page 24-14).
- The side curtain airbag system consists of the side curtain airbag module, including the roof trim, front grab handle, all grab handle brackets, and shielding protector. After the side curtain airbag has been deployed, replace these parts (see page 24-143).

1. Disconnect the negative cable from the battery, and wait at least 3 minutes before beginning work.

2. Remove the headliner (see page 20-85).

3. Disconnect the side curtain airbag 2P connector (A) from the SRS wire harness.

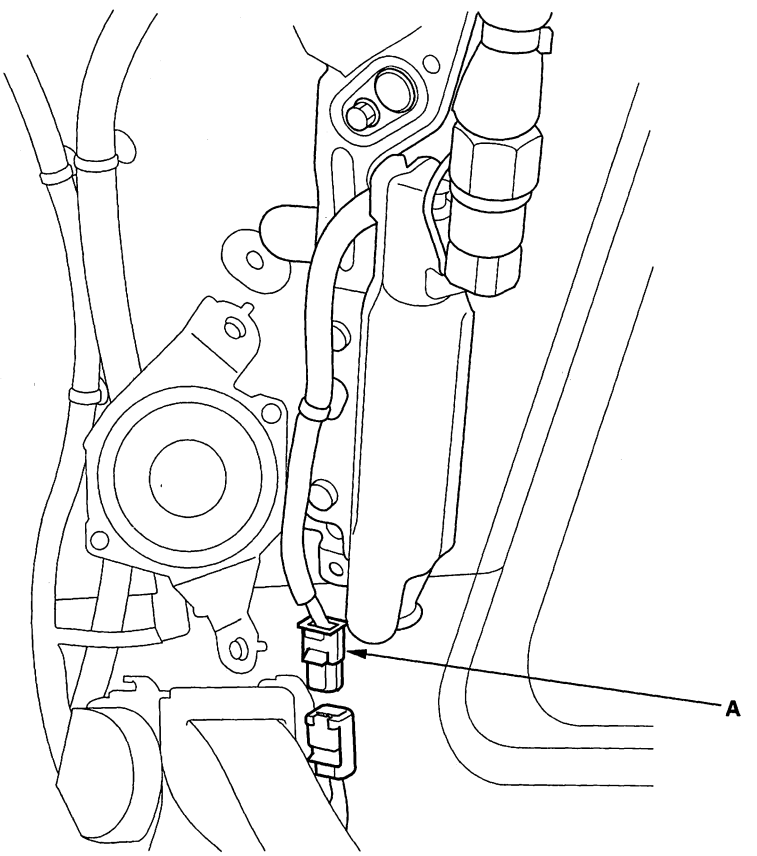


Left side shown ; Right side is similar.



BACK

Protected by AR

4. Remove the mounting bolts (A) and clips (B) from the bracket. Replace the bolt.

5. Remove the hook (C) from the protector.

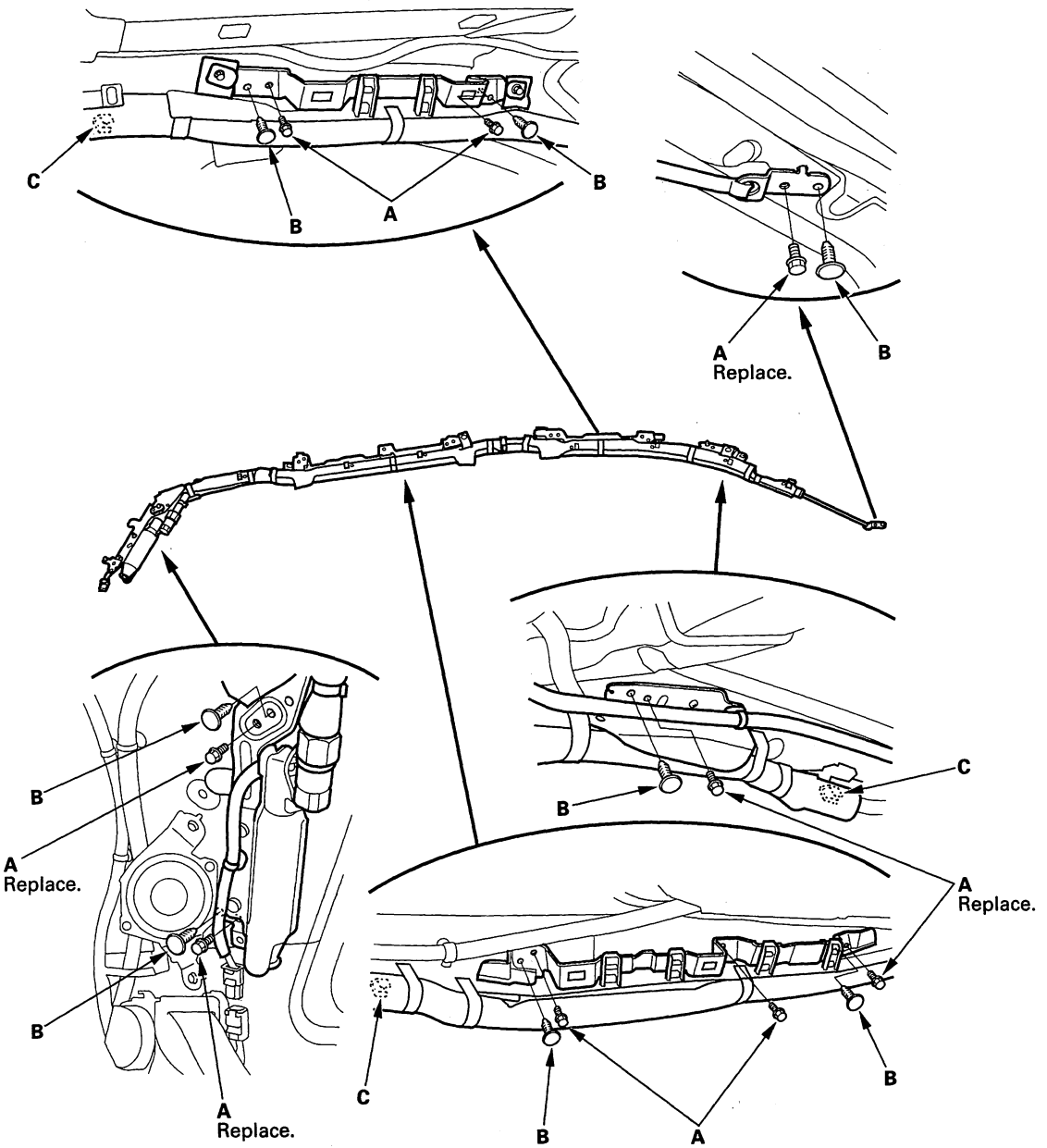


Left side shown; right side is similar.

(cont'd)

Protected by AR



## Side Curtain Airbag Replacement (cont'd)

### Installation

NOTE:
- Installation of the side curtain airbag must be performed according to the precautions/procedures described at the beginning of the SRS section (see page 24-14).
- If the airbag is frayed, or has only other visible damage, replace it. Do not attempt to repair an airbag.
- When you install the airbag, make sure it is not twisted, and that it is not caught between the inflator bracket by the bracket bolts.
- Make sure that the side curtain airbag inflator retainer is installed properly. Otherwise the airbag could accidentally deploy and cause damage or injuries.
- Check for damaged or stress-whitened clips, and if necessary, replace them with new ones.

1. Place the new side curtain airbag assembly on the side of the roof. Tighten the side curtain airbag mounting bolts (A).

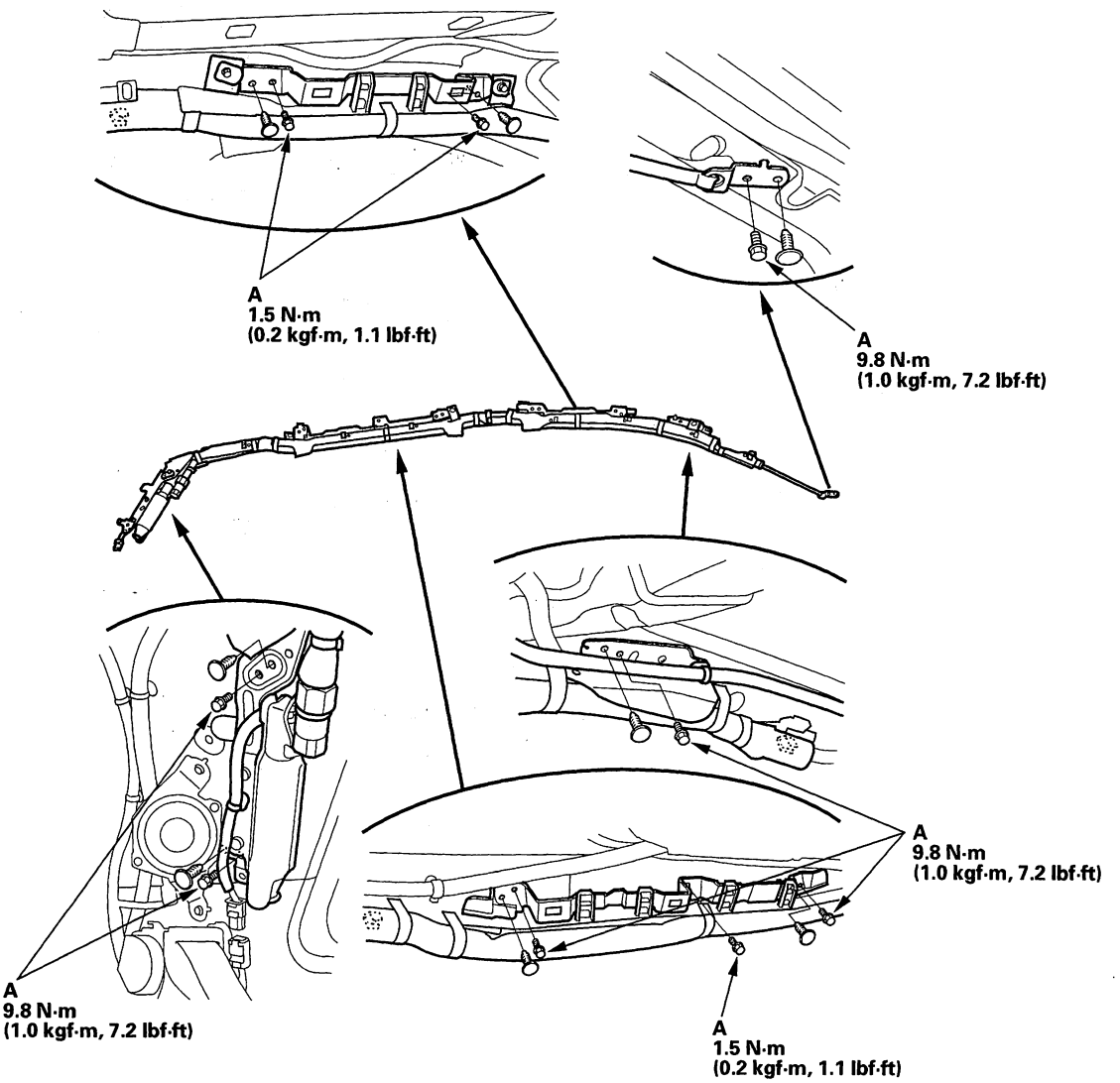


Left side shown; right side is similar.



BACK

Protected by AR

2. Connect the side curtain airbag 2P connector (A) to the side curtain airbag.

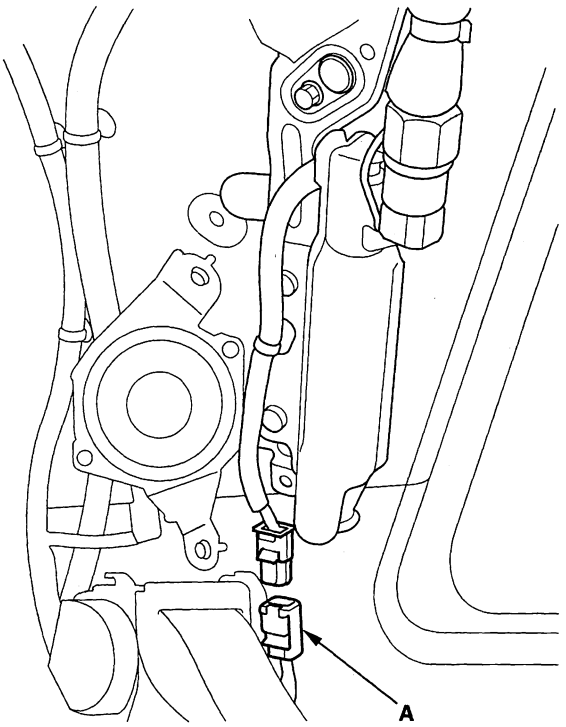


Left side shown ; right side is similar.

3. Reconnect the negative cable to the battery.
4. Connect the HDS, and erase the DTCs (see page 24-25).
5. After installing the side curtain airbag, confirm proper system operation: Turn the ignition switch ON (II); the SRS indicator should come on for about 6 seconds and then go off.
6. Install all removed parts.
7. Confirm proper headliner/pillar trim overlap (see page 24-144).

Protected by AR



## Airbag and Tensioner Disposal

**Special Tools Required**
Deployment tool 07HAZ-SG00500

Before scrapping any airbags, side airbags, side curtain airbags, seat belt tensioners, or seat belt buckle tensioner (including those in a whole vehicle to be scrapped), the part(s) must be deployed. If the vehicle is still within the warranty period, the Acura District Parts & Service Manager must give approval and/or special instruction before deploying the part(s). Only after the part(s) have been deployed (as the result of vehicle collision, for example), can they be scrapped.
If the parts appear intact (not deployed), treat them with extreme caution. Follow this procedure.

### Deploying Airbags in the Vehicle

If an SRS equipped vehicle is to be entirely scrapped, its airbags, side airbags, side curtain airbags, seat belt tensioners, and seat belt buckle tensioner should be deployed while still in the vehicle. These parts should not be considered as salvageable parts and should never be installed in another vehicle.

1. Turn the ignition switch OFF, then disconnect the negative cable from the battery, and wait at least 3 minutes.

2. Confirm that each airbag, side airbag, side curtain airbag, seat belt tensioner, or seat belt buckle tensioner is securely mounted.

3. Confirm that the deployment tool is functioning properly by following the check procedure on the tool label.

**Driver's Airbag**

4. Remove the access panel (A) from the steering wheel then disconnect the driver's airbag 4P connector (B) from the cable reel.

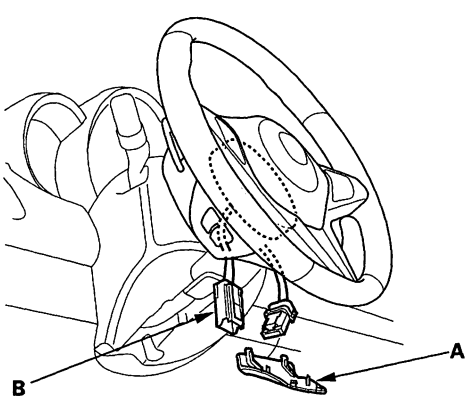


**Front Passenger's Airbag**

5. Remove the glove box, then disconnect the dashboard wire harness 4P connector (A) from the front passenger's airbag.

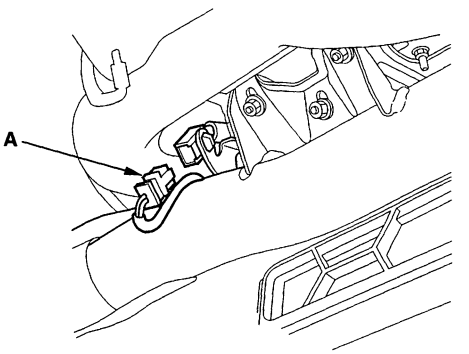


**Side Airbag**

6. Disconnect the side airbag 2P connector (A) from the SRS wire harness.

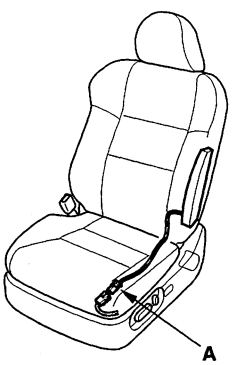


**Side Curtain Airbag**

7. Disconnect the SRS wire harness 2P connector (A) from the side curtain airbag.

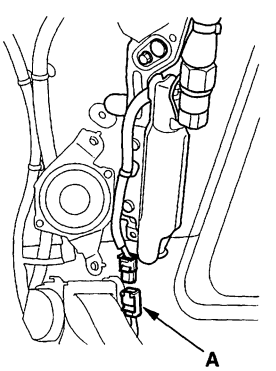




BACK

Protected by AR

**Seat Belt Tensioner**

8. Disconnect the SRS wire harness 4P connector (A) from the seat belt tensioner. Pull the seat belt out all the way and cut it.

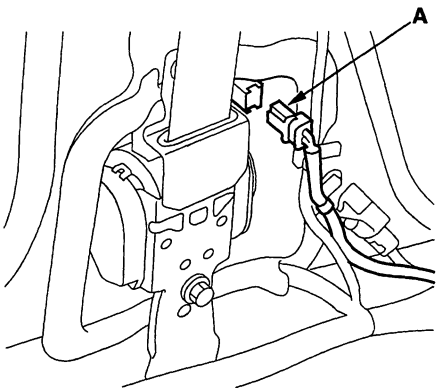


**Seat Belt Buckle Tensioner**

9. Disconnect the SRS wire harness 4P connector (A) from the seat belt buckle tensioner.

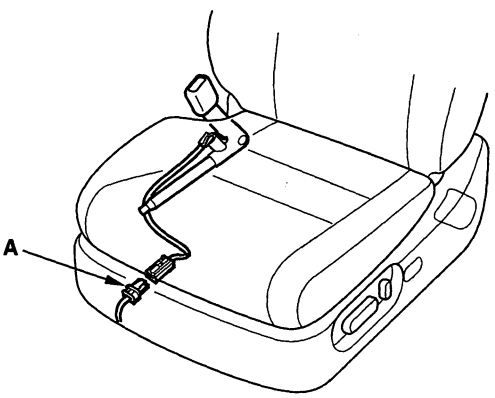


10. Cut off each connector, and strip the ends of the wires. Twist each pair of unlike colored wires together, and clip an alligator clip (A) from the deployment tool to each pair. Place the deployment tool at least 30 feet (10 meters) away from the vehicle.

NOTE: The driver's and front passenger's airbags have dual inflators. Twist each pair of unlike colored wires together, and clip an alligator clip to each pair.

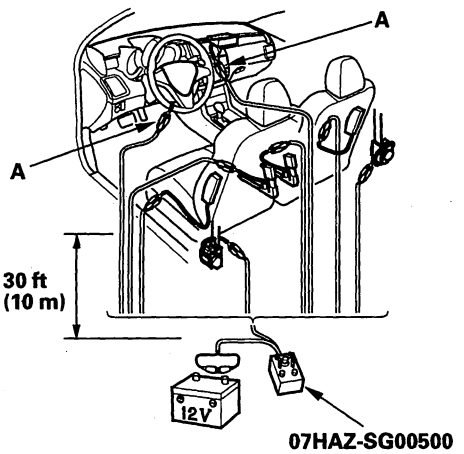


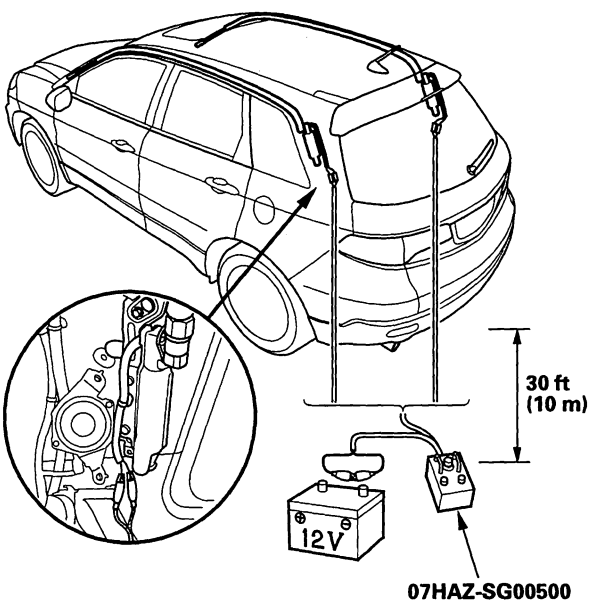


(cont'd)

Protected by AR



## Airbag and Tensioner Disposal (cont'd)

11. Connect a 12 volt battery to the tool.

    - If the green light on the tool comes on, the igniter circuit is defective and cannot deploy the component. Go to Disposal of Damaged Components.
    - If the red light on the tool comes on, the component is ready to be deployed.

12. Push the tool's deployment switch. The airbags and tensioners should deploy (deployment is both highly audible and visible: A loud noise and rapid inflation of the bag, followed by slow deflation).

    - If the components deploy and the green light on the tool comes on, continue with this procedure.
    - If a component does not deploy, yet the green light comes ON, its igniter is defective. Go to Disposal of Damaged Components.
    - During deployment, the airbags can become hot enough to burn you. Wait 30 minutes after deployment before touching the airbags.

13. Dispose of the complete airbag. No part of it can be reused. Place it in a sturdy plastic bag (A), and seal it securely. Dispose of the deployed airbag according to your local regulations.

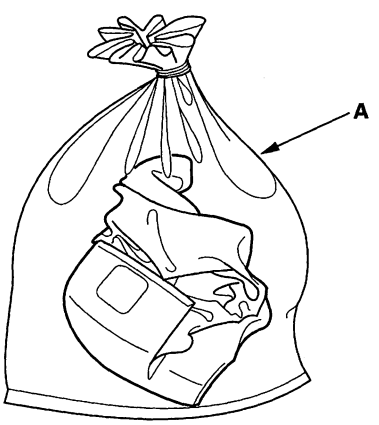


### Deploying Components Out of the Vehicle

If an intact airbag or tensioner has been removed from a scrapped vehicle, or has been found defective or damaged during transit, storage, or service, it should be deployed as follows:

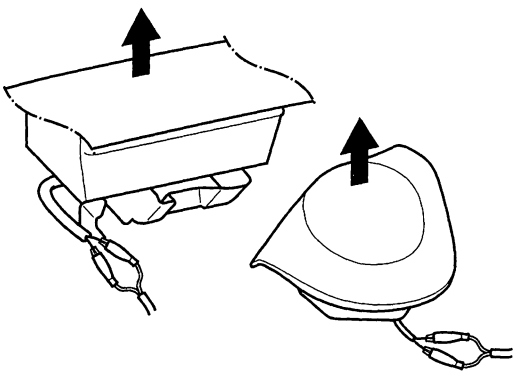

1. Confirm that the deployment tool is functioning properly by following the check procedure Deploying Airbags in the Vehicle on the tool label.

2. Position the airbag face up, outdoors, on flat ground, at least 30 feet (10 meters) from any obstacles or people.

3. Follow steps 9 through 12 of the in-vehicle deployment procedure.

   NOTE: The driver's and front passenger's airbags have dual inflators. Twist each pair of unlike colored wires together, and clip an alligator clip to each pair.



BACK

Protected by AR

## Disposal of Damaged Components

1. If installed in a vehicle, follow the removal procedure for the driver's airbag (see page 24-146), front passenger's airbag (see page 24-147), side airbag (see page 24-149), side curtain airbag (see page 24-150), seat belt buckle tensioner (see page 24-6), and seat belt tensioner (see page 24-4).

2. In all cases, make a short circuit by cutting, stripping, and twisting together the two inflator wires.

   NOTE: The driver's and front passenger's airbags have dual inflators. The like color wires go to the individual inflators.

3. Package the component in exactly the same packaging that the new replacement part came in.

4. Mark the outside of the box "DAMAGED AIRBAG NOT DEPLOYED," "DAMAGED SIDE AIRBAG NOT DEPLOYED," "DAMAGED SIDE CURTAIN AIRBAG NOT DEPLOYED," "DAMAGED SEAT BELT TENSIONER NOT DEPLOYED," or "DAMAGED SEAT BELT BUCKLE TENSIONER NOT DEPLOYED" so it does not get confused with your parts stock.

5. Contact your Acura District Parts and Service Manager for instructions on how and where to return it for disposal.

## Deployment Tool Check

1. Connect the yellow clips to both the switch protector handles on the tool and connect the tool to a vehicle battery.

2. Push the operation switch: green light means the tool is OK; a red light means the tool is faulty.

3. Disconnect the yellow clips from the protector handles.

4. Disconnect the tool from the battery.

Protected by AR



## Cable Reel Replacement

### Removal

1. Make sure the front wheels are aligned straight ahead.

2. Disconnect the negative cable from the battery, and wait at least 3 minutes.

3. Remove the driver's airbag (see page 24-146).

4. Disconnect the connector (A) from the cable reel, then remove the steering wheel bolt (B).

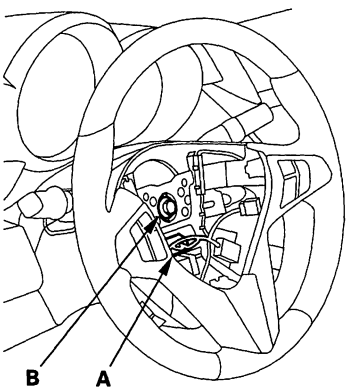


5. Confirm that the front wheels point straight ahead, then remove the steering wheel with a steering wheel puller (see step 6 on page 17-22).
   Do not tap on the steering wheel or steering column shaft when removing the steering wheel.

6. Remove the driver's under cover (see page 20-102).

7. Remove the upper column cover and lower column cover (see page 20-107).



BACK

Protected by AR

8. Disconnect the dashboard wire harness 4P connector (A) from the cable reel 4P connector (B), then disconnect the dashboard wire harness 20P connector (C) from the cable reel (D).

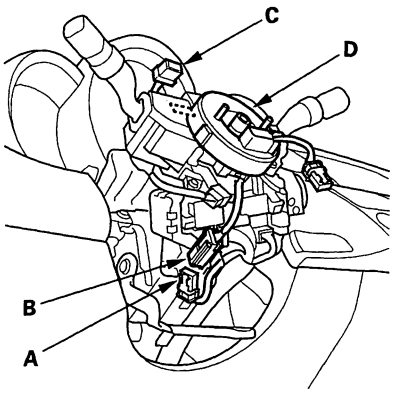


9. Release the lock tab (A) under the cable reel connector with a 90 ° hook shaped tool (B). Slide the tool below the cable reel connector just above the lock tab. Release the lower lock tab (C), and slide the cable reel off the column.

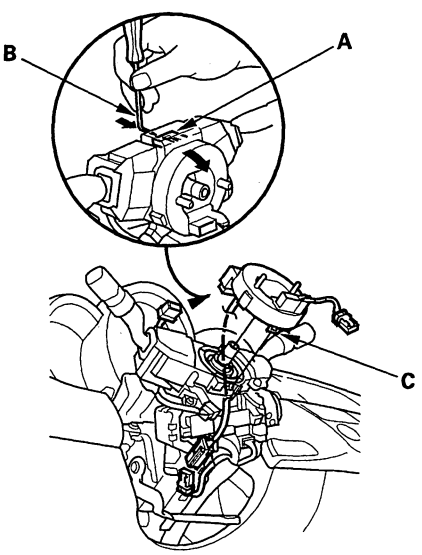


## Installation

1. Before installing the steering wheel, align the front wheels straight ahead.

2. If not already done, disconnect the negative cable from the battery, and wait at least 3 minutes.

3. Set the turn signal canceling sleeve (A) so that the projections (B) are aligned vertically.

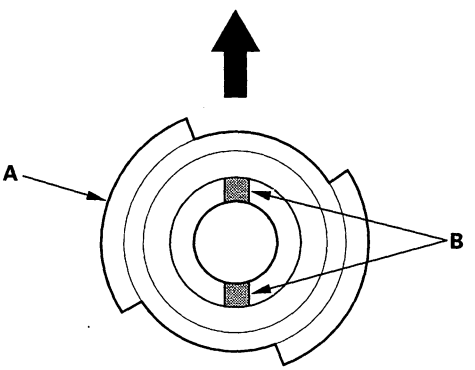


4. Carefully install the cable reel (A) on the steering column shaft. Then connect 20P connector (B) to the cable reel, and connect the 4P connector (C) to the dashboard wire harness 4P connector (D).

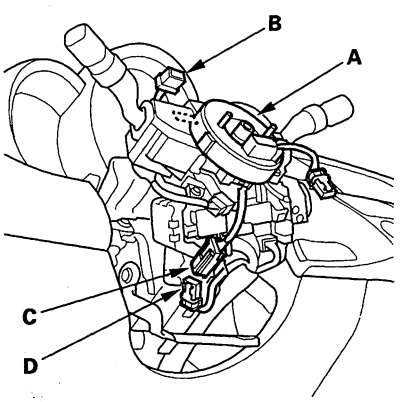


(cont'd)

Protected by AR



## Cable Reel Replacement (cont'd)

5. Install the steering column covers.

6. If necessary, center the cable reel (New replacement cable reels come centered.). Do this by first rotating the cable reel clockwise until it stops. Then rotate it counterclockwise (about three turns) until the arrow mark (A) on the cable reel label points straight up.

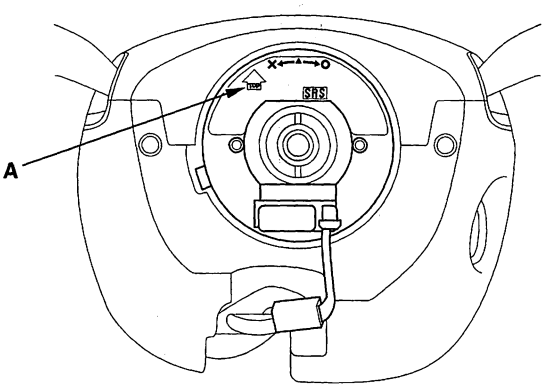


7. Position the two tabs (A) of the turn signal canceling sleeve (B) as shown, and install the steering wheel on to the steering column shaft, making sure the steering wheel hub (C) engages the pins (D) of the cable reel and tabs of the turn signal canceling sleeve. Do not tap on the steering wheel or steering column shaft when installing the steering wheel.

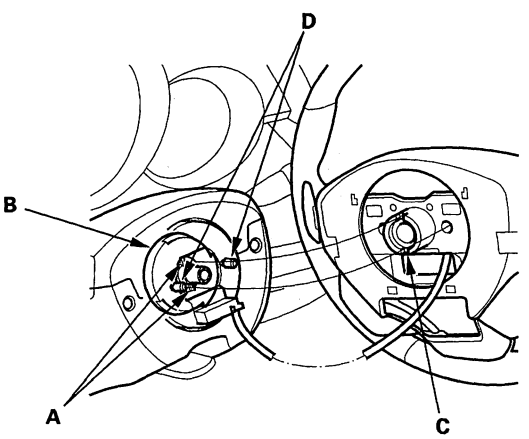


8. Install a new steering wheel bolt (A), then reconnect the connectors.

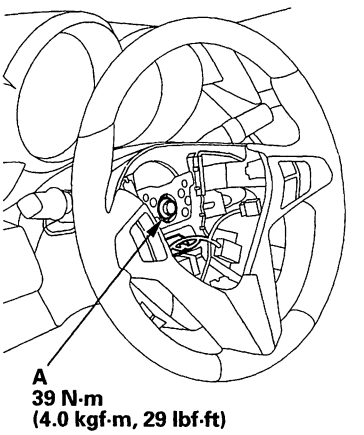


9. Install the driver's airbag (see page 24-146).

10. Reconnect the negative cable to the battery.

11. After installing the cable reel, confirm proper system operation:

- Turn the ignition switch ON (II); the SRS indicator should come on for about 6 seconds and then go off.
- After the SRS indicator has *turned off*, turn the steering wheel fully left and right to confirm the SRS indicator does not come on.
- Make sure the horn works.
- Make sure the cruise control buttons work.
- Make sure the steering wheel audio controls work.
- Make sure the voice control buttons work.
- Make sure there are no DTCs.



BACK

Protected by AR

## SRS Unit Replacement

### Removal

1. Disconnect the battery negative cable, and wait at least 3 minutes before beginning work.

2. Disconnect both seat belt tensioner connectors (see step 10 on page 24-23) and both seat belt buckle tensioner connectors (see step 11 on page 24-23).

3. Remove the center console (see page 20-92).

4. Disconnect the connectors and remove the TORX bolts (A), then pull out the SRS unit.

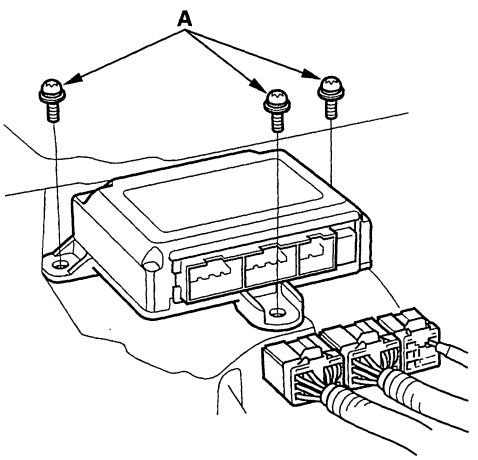


### Installation

1. Install the new SRS unit (A) with TORX bolts (B), then connect the connectors (C) to the SRS unit; push them into position until they click.

   NOTE: Be sure the SRS unit is sitting squarely against it's bracket before torquing the TORX bolts.

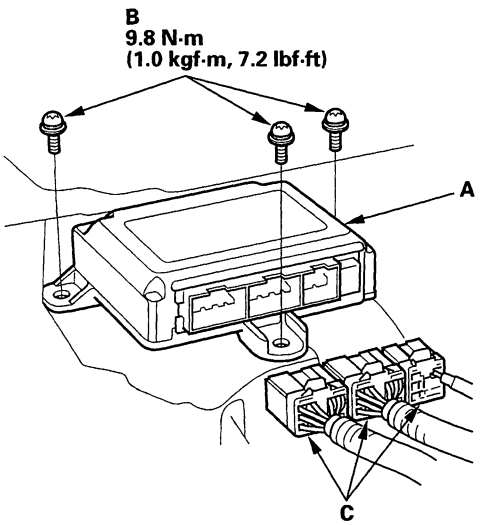


2. Reconnect both seat belt tensioner connectors (see step 10 on page 24-23) and both seat belt buckle tensioner connectors (see step 11 on page 24-23).

3. Reconnect the negative cable to the battery.

4. After installing the SRS unit, confirm proper system operation: Turn the ignition switch ON (II); the SRS indicator should come on for about 6 seconds and then go off.

5. Reinstall all removed parts.

Protected by AR



## Side Impact Sensor (First) Replacement

NOTE: Review the seat replacement procedure (see page 20-118) before doing repairs or service.

### Removal

1. Disconnect the negative cable from the battery, and wait at least 3 minutes before beginning work.
2. Disconnect the appropriate side airbag 2P connector (see step 6 on page 24-22).
3. Remove the front seat assembly (see page 20-118).
4. Remove the front door sill inner trim.
5. Remove the lower B-pillar lower trim panel (see page 24-69).
6. Disconnect the SRS wire harness 4P connector from the side impact sensor (first).
7. Using a TORX T30 bit, remove the TORX bolt (A), then remove the side impact sensor (first) (B).

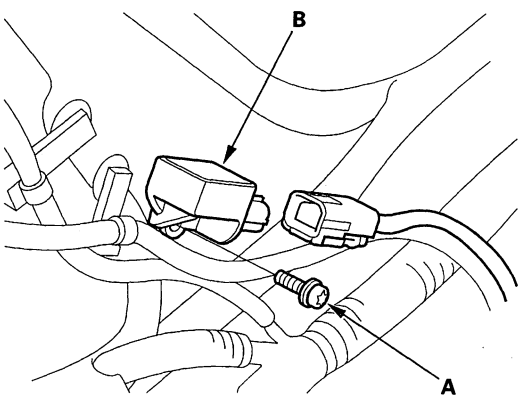


### Installation

1. Install the new side impact sensor (first) with the TORX bolt (A), then connect the SRS wire harness 4P connector (B) to the side impact sensor (first).

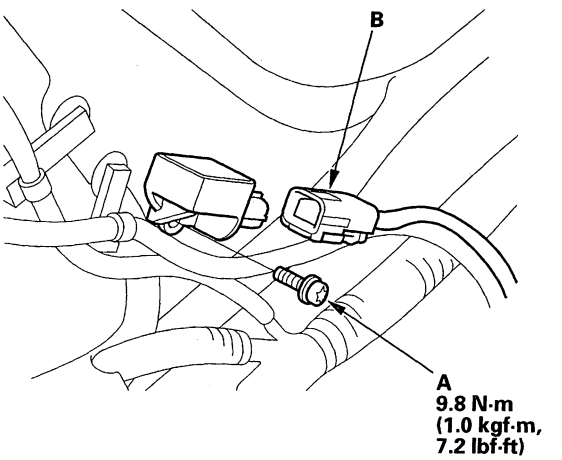


2. Reconnect the negative cable to the battery.
3. After installing the side impact sensor (first) confirm proper system operation: Turn the ignition switch ON (II); the SRS indicator should come on for about 6 seconds and then go off.
4. Reinstall all removed parts.



BACK

Protected by AR

# Side Impact Sensor (Second) Replacement

## Removal

1. Disconnect the negative cable from the battery, and wait at least 3 minutes before beginning work.
2. Disconnect the appropriate side curtain airbag 2P connector (see step 8 on page 24-22).
3. Remove the rear seat and seat side bolster (see page 20-137).
4. Disconnect the SRS wire harness 2P connector from the side impact sensor (second).
5. Remove the TORX bolt (A) using a TORX T30 bit, then remove the side impact sensor (second) (B).

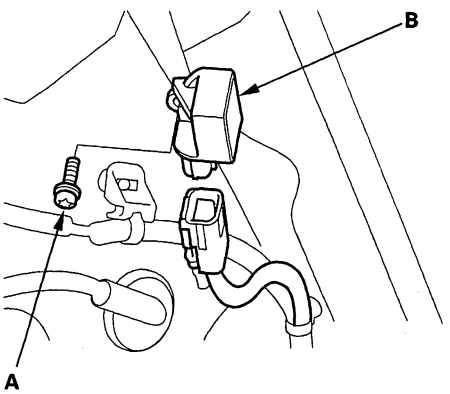


## Installation

1. Install the new side impact sensor (second) with the TORX bolt (A) then connect SRS wire harness 2P connector (B) to the side impact sensor (second).

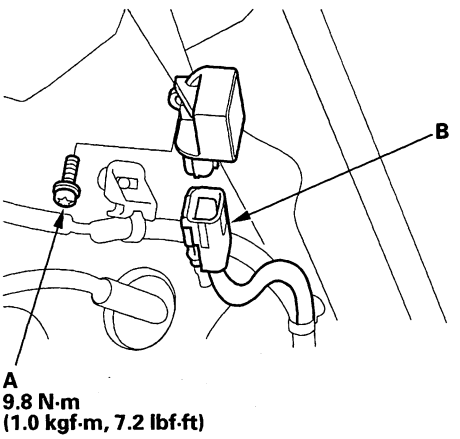


2. Reconnect the negative cable to the battery.
3. After installing the side impact sensor (second), confirm proper system operation: Turn the ignition switch ON (II); the SRS indicator should come on for about 6 seconds and then go off.
4. Reinstall all removed parts.

Protected by AR



## Roll Rate Sensor Replacement

### Removal

1. Disconnect the negative cable from the battery, and wait at least 3 minutes before beginning work.
2. Remove the front passenger's seat (see page 20-118).
3. Disconnect the SRS wire harness 2P connector (A) from the roll rate sensor.

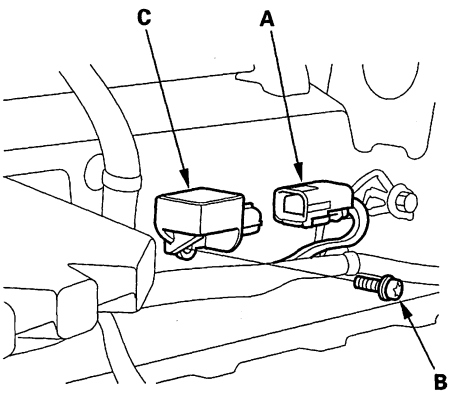


4. Using a TORX T30 bit, remove the TORX bolt (B), then remove the roll rate sensor (C).

### Installation

1. Install the new roll rate sensor with a TORX bolt (A), then connect the SRS wire harness 2P connector (B) to the roll rate sensor (C).

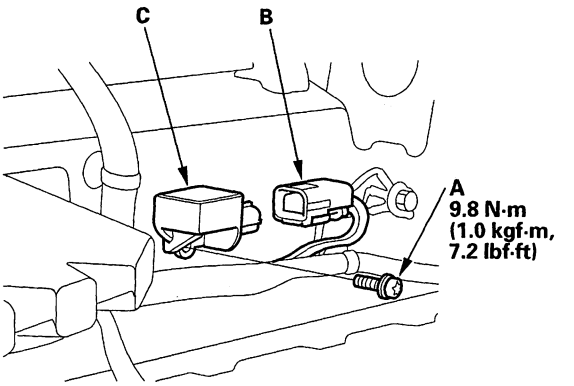


2. Reconnect the negative cable to the battery.
3. Install all removed parts.
4. After installing the roll rate sensor, confirm proper system operation: Turn the ignition switch ON (II); the SRS indicator should come on for about 6 seconds and then go off.



BACK

Protected by AR

# Front Passenger's Weight Sensor Replacement

## Removal

NOTE: Removal of the front passenger's weight sensors must be performed according to the precautions/ procedures described at the beginning of the SRS section (see page 24-14).

1. Disconnect the negative cable from the battery, and wait at least 3 minutes before beginning work.
2. Remove the front passenger's seat assembly section (see page 20-118).
3. Remove the cushion cover/pad from the seat cushion frame (see page 20-121).
4. Remove the front passenger's seat cushion frame (see page 20-121).
5. Using a TORX E18 socket, remove the TORX nuts (A) attaching the seat track (B) to the weight sensors (C).

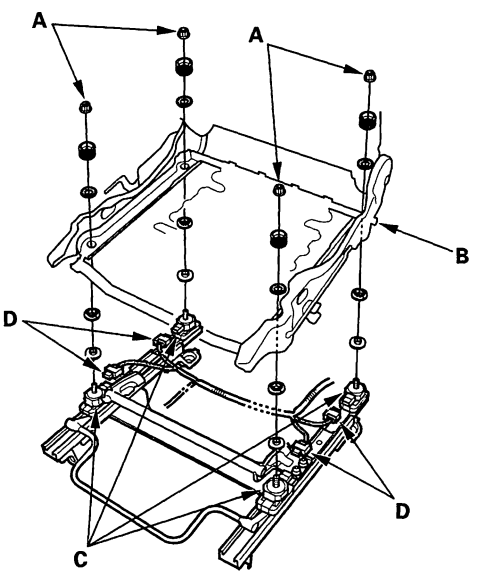


6. Disconnect the sensor connectors (D) from the seat weight sensor, then remove the front passenger's weight sensors.

## Installation

NOTE: Be sure to install the harness wires so they are not pinched or interfering with other parts.

1. Install the new front passenger's weight sensors under the seat track.

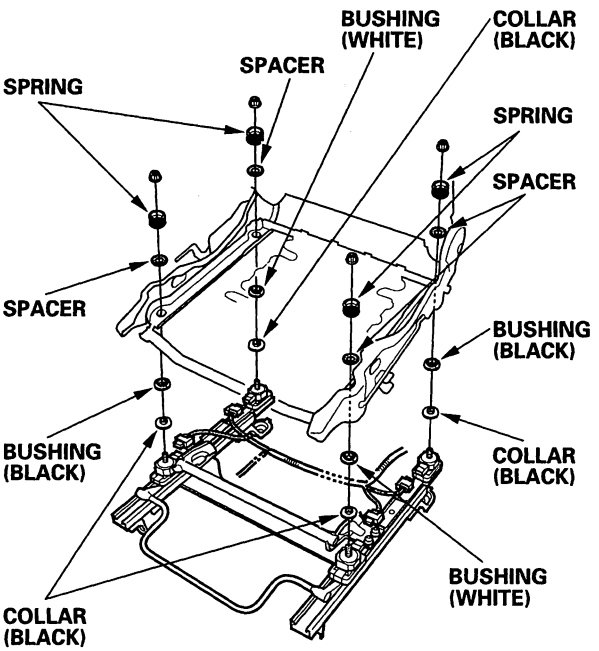


(cont'd)

Protected by AR



## Front Passenger's Weight Sensor Replacement (cont'd)

2. When tightening a TORX nuts (A), begin with the ① and tighten them in crisscross pattern in two or more steps.

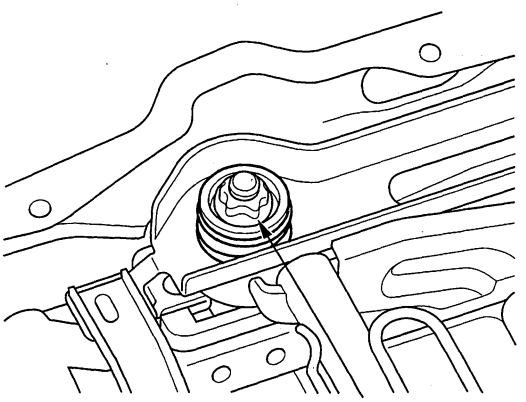

A
42 N·m
(4.2 kgf·m, 30 lbf·ft)

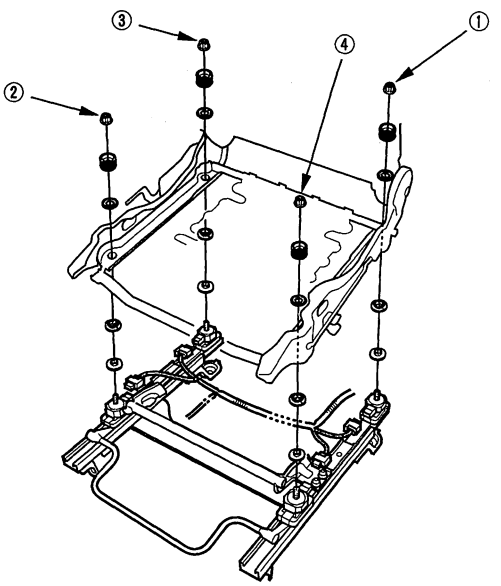


3. Torque the TORX nuts in the sequence shown in two or more steps.

4. Reassemble the front passenger's seat cushion cover/pad (see page 20-131).

5. Reinstall the front passenger's seat (see page 20-118).

6. Reconnect the negative cable to the battery.

7. Calibrate the ODS unit (see page 24-29).

8. After installing the front passenger's weight sensors, confirm proper system operation: Turn the ignition switch ON (II); the SRS indicator should come for about 6 seconds and then go off.



BACK

Protected by AR

## ODS Unit Replacement

NOTE: Review the seat replacement procedure (see page 20-118) before doing repairs or service.

### Removal

1. Disconnect the negative cable from the battery, and wait at least 3 minutes before beginning work.

2. Disconnect the passenger's side airbag 2P connector (see step 5 on page 24-22).

3. Remove the passenger's seat assembly (see page 20-118) and seat-back cover (see page 20-126).

4. Remove the cover (A), then disconnect the sensor connectors (B), from the ODS unit (C) and ODS unit 18P connector D.

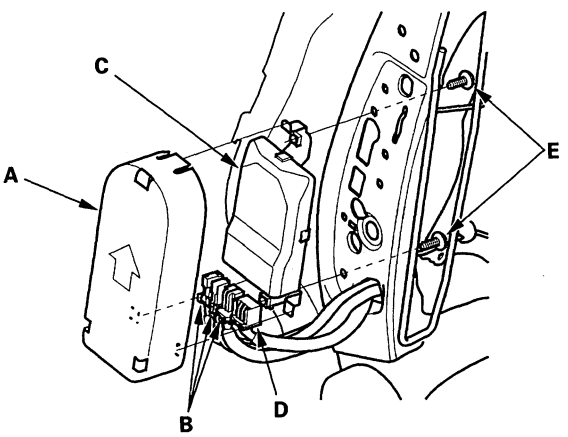


5. Remove the two screws (E) and the ODS unit.

### Installation

1. Place the new ODS unit (A) on the seat-back frame. Tighten the two screws (B), and connect the sensor connectors (C) and ODS unit 18P connector D to the ODS unit. Reinstall the cover (E).

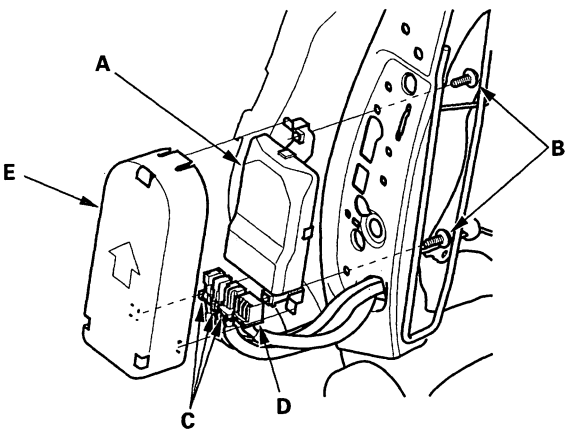


2. Install the seat-back cover in the reverse order of removal.

3. Install the seat assembly (see page 20-118), then connect the side airbag 2P connector.

4. Reconnect the negative cable to the battery.

5. Set the seat-back in the normal position, and make sure there is nothing on the front passenger's seat.

6. Initialize the ODS unit (see page 24-28).

7. After installing the ODS unit, confirm proper system operation: Turn the ignition switch ON (II); the SRS indicator should come on for about 6 seconds and then go off.

Protected by AR



## Front Impact Sensor Replacement

### Removal

1. Disconnect the negative cable from the battery, and wait at least 3 minutes before beginning work.

2. Disconnect the driver's airbag 4P connector (see step 2 on page 24-22), the front passenger's airbag 4P connector (see step 5 on page 24-22), both seat belt tensioner 4P connectors (see step 10 on page 24-23), and both seat belt buckle tensioner 4P connectors (see step 11 on page 24-23).

3. Remove the front bumper (see page 20-146).

4. Disconnect the engine compartment wire harness 2P connector (A) from the front impact sensor. Using a TORX T30 bit, remove the TORX bolt (B), then remove the front impact sensor (C). Replace the bolt.

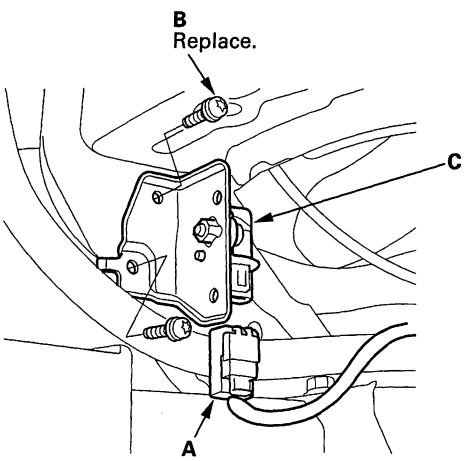


### Installation

1. Install the new front impact sensor with a new TORX bolt (A), then connect the engine compartment wire harness 2P connector (B) to the front impact sensor (C).

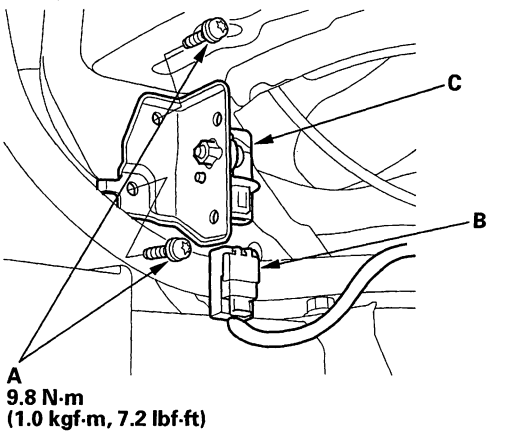


2. Reconnect the negative cable to the battery.

3. After installing the front impact sensor, confirm proper system operation: Turn the ignition switch ON (II); the SRS indicator should come on for about 6 seconds and then go off.

4. Reinstall all removed parts.



BACK

Protected by AR

# Driver's Seat Position Sensor Replacement

## Removal

NOTE:
- Removal of the driver's seat position sensor must be performed according to the precautions/procedures described at the beginning of SRS section (see page 24-14).
- Do not turn the ignition switch ON (II), and do not connect the battery cable while removing the driver's seat position sensor.

1. Disconnect the negative cable from the battery, and wait at least 3 minutes before beginning work.
2. Disconnect the driver's airbag 4P connector (see step 2 on page 24-22).
3. Remove the driver's seat assembly (see page 20-118).
4. Disconnect the driver's seat wire harness or seat position sensor harness 2P connector (A) from the driver's seat position sensor.

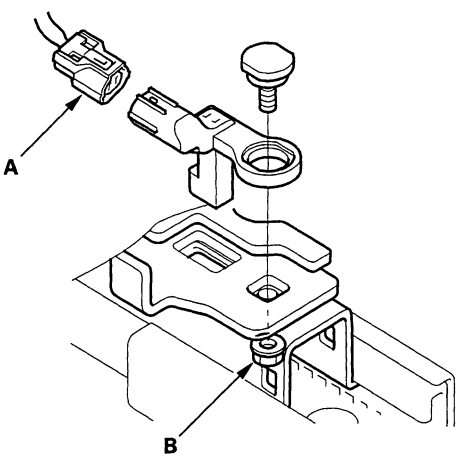


5. Using a mounting nut (B), then remove the driver's seat position sensor.

## Installation

NOTE:
- Be sure to install the harness so it does not pinched or interfere with other parts.
- Do not turn the ignition switch ON (II), and do not connect the battery cable while installing the driver's seat position sensor.
- After installing the driver's seat position sensor, make sure it is clean. Keep it away from dust.

1. Install the new driver's seat position sensor with a mounting nut (A), then connect the driver's seat wire harness or seat position sensor harness 2P connector to the driver's seat position sensor (B).

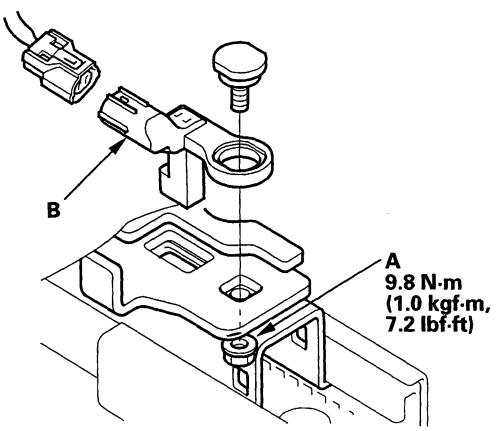


2. Install the driver's seat assembly (see page 20-118).
3. Reconnect the negative cable to the battery.
4. Check the operation of the driver's seat position sensor with the HDS (see page 24-31).

Protected by AR



## Passenger's Airbag Cutoff Indicator Illumination Bulb Test

NOTE: Information marked with an asterisk ( * ) applies to models with the navigation system.

1. Remove the center panel (see page 20-101).

2. Check for continuity between the No. 2* or No. 18 and No. 6* or No. 20 terminals of the indicator. If there is no continuity, replace the bulb.

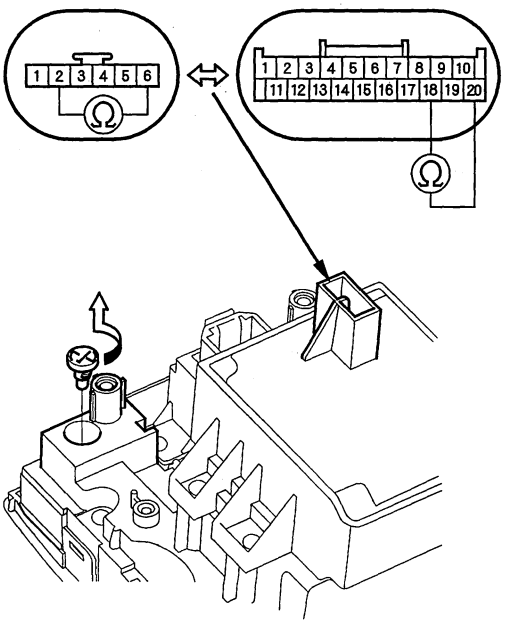


3. Reinstall the parts in the reverse order of removal.



BACK

Protected by AR

BACK